Rules for the Classification of Inland Navigation Vessels

PART D – Additional Requirements for Notations

Chapters 1 – 2 – 3

NR 217.D1 DT R06 E **June 2021**

Marine & Offshore
Le Triangle de l'Arche - 8 Cours du Triangle - CS 50101
92937 Paris La Defense Cedex - France
Tel: + 33 (0)1 55 24 70 00
https://marine-offshore.bureauveritas.com/bv-rules

BUREAU VERITAS MARINE & OFFSHORE

GENERAL CONDITIONS

1. INDEPENDENCE OF THE SOCIETY AND APPLICABLE TERMS

1.1 The Society shall remain at all times an independent contractor and neither the Society nor any of its officers, employees, servants, agents or subcontractors shall be or act as an employee, servant or agent of any other party hereto in the performance of the Services.

1.2 The operations of the Society in providing its Services are exclusively conducted by way of random inspections and do not, in any circumstances, involve monitoring or exhaustive verification.

1.3 The Society acts as a services provider. This cannot be construed as an obligation bearing on the Society to obtain a result or as a warranty. The Society is not and may not be considered as an underwriter, broker in Unit's sale or chartering, expert in Unit's valuation, consulting engineer, controller, naval architect, designer, manufacturer, shipbuilder, repair or conversion yard, charterer or shipowner; none of the above listed being relieved from any of their expressed or implied obligations as a result of the interventions of the Society.

1.4 Only the Society is qualified to apply and interpret its Rules.

1.5 The Client acknowledges the latest versions of the Conditions and of the applicable Rules applying to the Services' performance.

1.6 Unless an express written agreement is made between the Parties on the applicable Rules, the applicable Rules shall be the Rules applicable at the time of entering into the relevant contract for the performance of the Services.

1.7 The Services' performance is solely based on the Conditions. No other terms shall apply whether express or implied.

2. DEFINITIONS

2.1 **"Certificate(s)"** means classification or statutory certificates, attestations and reports following the Society's intervention.

2.2 **"Certification"** means the activity of certification in application of national and international regulations or standards ("Applicable Referential"), in particular by delegation from different governments that can result in the issuance of a Certificate.

2.3 **"Classification"** means the classification of a Unit that can result or not in the issuance of a classification Certificate with reference to the Rules. Classification (or Certification as defined in clause 2.2) is an appraisement given by the Society to the Client, at a certain date, following surveys by its surveyors on the level of compliance of the Unit to the Society's Rules and/or to Applicable Referential for the Services provided. They cannot be construed as an implied or express warranty of safety, fitness for the purpose, seaworthiness of the Unit or of its value for sale, insurance or chartering.

2.4 **"Client"** means the Party and/or its representative requesting the Services.

2.5 **"Conditions"** means the terms and conditions set out in the present document.

2.6 **"Industry Practice"** means international maritime and/or offshore industry practices.

2.7 **"Intellectual Property"** means all patents, rights to inventions, utility models, copyright and related rights, trade marks, logos, service marks, trade dress, business and domain names, rights in trade dress or get-up, rights in goodwill or to sue for passing off, unfair competition rights, rights in designs, rights in computer software, database rights, topography rights, moral rights, rights in confidential information (including know-how and trade secrets), methods and protocols for Services, and any other intellectual property rights, in each case whether capable of registration, registered or unregistered and including all applications for and renewals, reversions or extensions of such rights, and all similar or equivalent rights or forms of protection in any part of the world.

2.8 **"Parties"** means the Society and Client together.

2.9 **"Party"** means the Society or the Client.

2.10 **"Register"** means the public electronic register of ships updated regularly by the Society.

2.11 **"Rules"** means the Society's classification rules (available online on veristar.com), guidance notes and other documents. The Society's Rules take into account at the date of their preparation the state of currently available and proven technical minimum requirements but are not a standard or a code of construction neither a guide for maintenance, a safety handbook or a guide of professional practices, all of which are assumed to be known in detail and carefully followed at all times by the Client.

2.12 **"Services"** means the services set out in clauses 2.2 and 2.3 but also other services related to Classification and Certification such as, but not limited to: ship and company safety management certification, ship and port security certification, maritime labour certification, training activities, all activities and duties incidental thereto such as documentation on any supporting means, software, instrumentation, measurements, tests and trials on board. The Services are carried out by the Society according to the Rules and/or the Applicable Referential and to the Bureau Veritas' Code of Ethics. The Society shall perform the Services according to the applicable national and international standards and Industry Practice and always on the assumption that the Client is aware of such standards and Industry Practice.

2.13 **"Society"** means the classification society **'Bureau Veritas Marine & Offshore SAS'**, a company organized and existing under the laws of France, registered in Nanterre under number 821 131 844, or any other legal entity of Bureau Veritas Group as may be specified in the relevant contract, and whose main activities are Classification and Certification of ships or offshore units.

2.14 **"Unit"** means any ship or vessel or offshore unit or structure of any type or part of it or system whether linked to shore, river bed or sea bed or not, whether operated or located at sea or in inland waters or partly on land, including submarines, hovercrafts, drilling rigs, offshore installations of any type and of any purpose, their related and ancillary equipment, subsea or not, such as well head and pipelines, mooring legs and mooring points or otherwise as decided by the Society.

3. SCOPE AND PERFORMANCE

3.1 Subject to the Services requested and always by reference to the Rules, and/or to the Applicable Referential, the Society shall:

- review the construction arrangements of the Unit as shown on the documents provided by the Client;
- conduct the Unit surveys at the place of the Unit construction;
- class the Unit and enter the Unit's class in the Society's Register;
- survey the Unit periodically in service to note whether the requirements for the maintenance of class are met.

The Client shall inform the Society without delay of any circumstances which may cause any changes on the conducted surveys or Services.

3.2 The Society will not:

- declare the acceptance or commissioning of a Unit, nor its construction in conformity with its design, such activities remaining under the exclusive responsibility of the Unit's owner or builder;
- engage in any work relating to the design, construction, production or repair checks, neither in the operation of the Unit or the Unit's trade, neither in any advisory services, and cannot be held liable on those accounts.

4. RESERVATION CLAUSE

4.1 The Client shall always: (i) maintain the Unit in good condition after surveys; (ii) present the Unit for surveys; and (iii) inform the Society in due time of any circumstances that may affect the given appraisement of the Unit or cause to modify the scope of the Services.

4.2 Certificates are only valid if issued by the Society.

4.3 The Society has entire control over the Certificates issued and may at any time withdraw a Certificate at its entire discretion including, but not limited to, in the following situations: where the Client fails to comply in due time with instructions of the Society or where the Client fails to pay in accordance with clause 6.2 hereunder.

4.4 The Society may at times and at its sole discretion give an opinion on a design or any technical element that would 'in principle' be acceptable to the Society. This opinion shall not presume on the final issuance of any Certificate nor on its content in the event of the actual issuance of a Certificate. This opinion shall only be an appraisement made by the Society which shall not be held liable for it.

5. ACCESS AND SAFETY

5.1 The Client shall give to the Society all access and information necessary for the efficient performance of the requested Services. The Client shall be the sole responsible for the conditions of presentation of the Unit for tests, trials and surveys and the conditions under which tests and trials are carried out. Any information, drawing, etc. required for the performance of the Services must be made available in due time.

5.2 The Client shall notify the Society of any relevant safety issue and shall take all necessary safety-related measures to ensure a safe work environment for the Society or any of its officers, employees, servants, agents or subcontractors and shall comply with all applicable safety regulations.

6. PAYMENT OF INVOICES

6.1 The provision of the Services by the Society, whether complete or not, involves, for the part carried out, the payment of fees thirty (30) days upon issuance of the invoice.

6.2 Without prejudice to any other rights hereunder, in case of Client's payment default, the Society shall be entitled to charge, in addition to the amount not properly paid, interest equal to twelve (12) months LIBOR plus two (2) per-cent as of due date calculated on the number of days such payment is delinquent. The Society shall also have the right to withhold Certificates and other documents and/or to suspend or revoke the validity of Certificates.

6.3 In case of dispute on the invoice amount, the undisputed portion of the invoice shall be paid and an explanation on the dispute shall accompany payment so that action can be taken to resolve the dispute.

7. LIABILITY

7.1 The Society bears no liability for consequential loss. For the purpose of this clause consequential loss shall include, without limitation:

- Indirect or consequential loss;
- Any loss and/or deferral of production, loss of product, loss of use, loss of bargain, loss of revenue, loss of profit or anticipated profit, loss of business and business interruption, in each case whether direct or indirect.

The Client shall defend, release, save, indemnify, defend and hold harmless the Society from the Client's own consequential loss regardless of cause.

7.2 Except in case of wilful misconduct of the Society, death or bodily injury caused by the Society's negligence and any other liability that could not be, by law, limited, the Society's maximum liability towards the Client is limited to one hundred and fifty per-cent (150%) of the price paid by the Client to the Society for the Services having caused the damage. This limit applies to any liability of whatsoever nature and howsoever arising, including fault by the Society, breach of contract, breach of warranty, tort, strict liability, breach of statute.

7.3 All claims shall be presented to the Society in writing within three (3) months of the completion of Services' performance or (if later) the date when the events which are relied on were first discovered by the Client. Any claim not so presented as defined above shall be deemed waived and absolutely time barred.

8. INDEMNITY CLAUSE

8.1 The Client shall defend, release, save, indemnify and hold harmless the Society from and against any and all claims, demands, lawsuits or actions for damages, including legal fees, for harm or loss to persons and/or property tangible, intangible or otherwise which may be brought against the Society, incidental to, arising out of or in connection with the performance of the Services (including for damages arising out of or in connection with opinions delivered according to clause 4.4 above) except for those claims caused solely and completely by the gross negligence of the Society, its officers, employees, servants, agents or subcontractors.

9. TERMINATION

9.1 The Parties shall have the right to terminate the Services (and the relevant contract) for convenience after giving the other Party thirty (30) days' written notice, and without prejudice to clause 6 above.

9.2 The Services shall be automatically and immediately terminated in the event the Client can no longer establish any form of interest in the Unit (e.g. sale, scrapping).

9.3 The Classification granted to the concerned Unit and the previously issued Certificates shall remain valid until the date of effect of the termination notice issued, or immediately in the event of termination under clause 9.2, subject to compliance with clause 4.1 and 6 above.

9.4 In the event where, in the reasonable opinion of the Society, the Client is in breach, or is suspected to be in breach of clause 16 of the Conditions, the Society shall have the right to terminate the Services (and the relevant contracts associated) with immediate effect.

10. FORCE MAJEURE

10.1 Neither Party shall be responsible or liable for any failure to fulfil any term or provision of the Conditions if and to the extent that fulfilment has been delayed or temporarily prevented by a force majeure occurrence without the fault or negligence of the Party affected and which, by the exercise of reasonable diligence, the said Party is unable to provide against.

10.2 For the purpose of this clause, force majeure shall mean any circumstance not being within a Party's reasonable control including, but not limited to: acts of God, natural disasters, epidemics or pandemics, wars, terrorist attacks, riots, sabotages, impositions of sanctions, embargoes, nuclear, chemical or biological contaminations, laws or action taken by a government or public authority, quotas or prohibition, expropriations, destructions of the worksite, explosions, fires, accidents, any labour or trade disputes, strikes or lockouts.

11. CONFIDENTIALITY

11.1 The documents and data provided to or prepared by the Society in performing the Services, and the information made available to the Society, will be treated as confidential except where the information:

- is properly and lawfully in the possession of the Society;
- is already in possession of the public or has entered the public domain, other than through a breach of this obligation;
- is acquired or received independently from a third party that has the right to disseminate such information;
- is required to be disclosed under applicable law or by a governmental order, decree, regulation or rule or by a stock exchange authority (provided that the receiving Party shall make all reasonable efforts to give prompt written notice to the disclosing Party prior to such disclosure).

11.2 The Parties shall use the confidential information exclusively within the framework of their activity underlying these Conditions.

11.3 Confidential information shall only be provided to third parties with the prior written consent of the other Party. However, such prior consent shall not be required when the Society provides the confidential information to a subsidiary.

11.4 Without prejudice to sub-clause 11.1, the Society shall have the right to disclose the confidential information if required to do so under regulations of the International Association of Classifications Societies (IACS) or any statutory obligations.

12. INTELLECTUAL PROPERTY

12.1 Each Party exclusively owns all rights to its Intellectual Property created before or after the commencement date of the Conditions and whether or not associated with any contract between the Parties.

12.2 The Intellectual Property developed by the Society for the performance of the Services including, but not limited to drawings, calculations, and reports shall remain the exclusive property of the Society.

13. ASSIGNMENT

13.1 The contract resulting from to these Conditions cannot be assigned or transferred by any means by a Party to any third party without the prior written consent of the other Party.

13.2 The Society shall however have the right to assign or transfer by any means the said contract to a subsidiary of the Bureau Veritas Group.

14. SEVERABILITY

14.1 Invalidity of one or more provisions does not affect the remaining provisions.

14.2 Definitions herein take precedence over other definitions which may appear in other documents issued by the Society.

14.3 In case of doubt as to the interpretation of the Conditions, the English text shall prevail.

15. GOVERNING LAW AND DISPUTE RESOLUTION

15.1 These Conditions shall be construed in accordance with and governed by the laws of England and Wales.

15.2 Any dispute shall be finally settled under the Rules of Arbitration of the Maritime Arbitration Chamber of Paris ("CAMP"), which rules are deemed to be incorporated by reference into this clause. The number of arbitrators shall be three (3). The place of arbitration shall be Paris (France). The Parties agree to keep the arbitration proceedings confidential.

15.3 Notwithstanding clause 15.2, disputes relating to the payment of the Society's invoices may be submitted by the Society to the *Tribunal de Commerce de Nanterre*, France, or to any other competent local Court, at the Society's entire discretion.

16. PROFESSIONAL ETHICS

16.1 Each Party shall conduct all activities in compliance with all laws, statutes, rules, economic and trade sanctions (including but not limited to US sanctions and EU sanctions) and regulations applicable to such Party including but not limited to: child labour, forced labour, collective bargaining, discrimination, abuse, working hours and minimum wages, anti-bribery, anti-corruption, copyright and trademark protection, personal data protection (https://personaldataprotection.bureauveritas.com/privacypolicy).

Each of the Parties warrants that neither it, nor its affiliates, has made or will make, with respect to the matters provided for hereunder, any offer, payment, gift or authorization of the payment of any money directly or indirectly, to or for the use or benefit of any official or employee of the government, political party, official, or candidate.

16.2 In addition, the Client shall act consistently with the Bureau Veritas' Code of Ethics and, when applicable, Business Partner Code of Conduct both available at https://group.bureauveritas.com/group/corporate-social-responsibility/operational-excellence.

RULES FOR INLAND NAVIGATION VESSELS

Part D
Additional Requirements for Notations

Chapters **1 2 3**

June 2021

These Rules apply to inland navigation vessels for which contracts for construction are signed on or after June 1st, 2021.

The English version of these Rules takes precedence over editions in other languages.

CHAPTER 1
SERVICE NOTATIONS

Section 1 General Cargo Vessels

Section 2 Bulk Cargo Vessels

Section 3 Tankers

Section 4 Container Vessels

Section 5 RoRo Cargo Vessels

Section 6 Passenger Vessels

Section 7 Tugs and Pushers

Section 8 Pontoons

Section 9 Vessels for Dredging Activities

Section 10 Launches

Section 11 Pleasure Vessels

CHAPTER 2
ADDITIONAL CLASS NOTATIONS

Section 1 Navigation in Ice

Section 2 Transport of Heavy Cargoes

Section 3 Equipped for Transport of Containers

Section 4 Equipped for Transport of Wheeled Vehicles

Section 5 Ferry

Section 6 Damage Stability

Section 7 Fire

Section 8 Unattended Machinery Spaces (AUT-UMS)

Section 9 Annual Survey

Section 10 Grabloading

Section 11 Pollution Prevention

Section 12 Estuary Plus

CHAPTER 3
TRANSPORT OF DANGEROUS GOODS

Section 1 General

Section 2 DG-G

Section 3 DG-C

Section 4 DG-N

Section 5 Oil Separator Vessel

Section 6 Supply Vessel

Section 7 Transport of Dry Dangerous Goods

Section 8 DGL

Section 9 DGD

Appendix 1 Definitions

Appendix 2 Additional Requirements Concerning Carriage of Dry Cargoes

Appendix 3 List of Dangerous Goods Accepted for Carriage in Tank Vessels

2.17 Column 17: Anti-explosion protection required
2.18 Column 18: Equipment required
2.19 Column 19: Number of cones/blue lights
2.20 Column 20: Additional requirements / Remarks applicable to the vessel

Part D
Additional Requirements for Notations

Chapter 1
SERVICE NOTATIONS

SECTION 1 GENERAL CARGO VESSELS

Symbols

A_{SH} : Net web sectional area, in cm^2

B : Breadth, in m, defined in Pt B, Ch 1, Sec 2, [2.2]

D : Depth, in m, defined in Pt B, Ch 1, Sec 2, [2.3]

g : Gravitational acceleration:

$g = 9,81\ m/s^2$

k : Material factor defined in:

- Pt B, Ch 2, Sec 3, [2.3] for steel
- Pt B, Ch 2, Sec 3, [3.5] for aluminium alloys

L : Rule length, in m, defined in Pt B, Ch 1, Sec 2, [2.1]

R_y : Minimum yield stress, in N/mm^2, of the material to be taken equal to:

- $R_y = 235/k\ N/mm^2$ for steel
- $R_y = 100/k\ N/mm^2$ for aluminium alloys

unless otherwise specified

S : Spacing, in m, of primary supporting members

s : Spacing, in m, of ordinary stiffeners

T : Scantling draught, in m, defined in Pt B, Ch 1, Sec 2, [2.4]

T_1 : Draught associated with each cargo and ballast distribution, in m, defined in Pt B, Ch 3, Sec 1, [2.4.3]

t : Net thickness, in mm, of plating

w : Net section modulus, in cm^3, of ordinary stiffeners or primary supporting members

β_b, β_S : Span correction coefficients defined in Pt B, Ch 2, Sec 4, [5.2]

γ_R : Partial safety factor covering uncertainties regarding resistance, defined in Pt B, Ch 5, Sec 1, [1.3]

γ_m : Partial safety factor covering uncertainties regarding material, defined in Pt B, Ch 5, Sec 1, [1.3]

λ_b, λ_s : Coefficients for pressure distribution correction defined in Pt B, Ch 2, Sec 4, [6.3]

ℓ : Stiffener span, in m.

1 General

1.1 Application

1.1.1 Vessels complying with the requirements of this Section are eligible for the assignment of the service notation **General cargo vessel**, as defined in Pt A, Ch 1, Sec 3, [2.1.3].

1.1.2 Vessels dealt with in this Section are to comply with the requirements stipulated in Part A, Part B and Part C of the Rules, as applicable, and with the requirements of this Section, which are specific to general cargo vessels.

1.2 Direct calculation

1.2.1 The following requirements apply for the analysis of primary supporting members.

Direct calculation is to be carried out in compliance with Pt B, Ch 2, Sec 8, [2].

1.2.2 Loading conditions and load cases in service conditions

The loads are to be calculated for the most severe loading conditions, with a view to maximising the stresses in the primary supporting members.

The following loading conditions are generally to be considered:

a) Harbour
- full cargo load in hold/vessel at the relevant draught T_1
- empty hold/vessel at the relevant draught T_1

b) Navigation
- full cargo load/vessel at the scantling draught T
- lightship/vessel at the relevant draught T_1.

1.2.3 Structure checks

The following checks are to be carried out:

- level of normal stresses and shear stresses, in particular in way of holes and passage of longitudinals
- buckling strength of unstiffened webs
- for double hull vessels, continuity of double bottom in side tanks.

2 Stability

2.1 General

2.1.1 The Society may waive the requirements of this Article depending on the vessel design and operating conditions.

2.1.2 The general requirements of Pt B, Ch 2, Sec 2, [1] to Pt B, Ch 2, Sec 2, [3] are to be complied with.

2.2 Intact stability

2.2.1 The stability of general cargo vessels for all intended loading conditions is to comply with Pt B, Ch 2, Sec 2, [4].

3 Single side general cargo vessels

3.1 General

3.1.1 Application

The requirements of this Article apply to open deck vessels of single side construction, with or without double bottom, intended primarily to carry general cargoes.

The loading/unloading may be performed in one or two runs.

3.2 Protection of cargo holds

3.2.1 Coating

All metallic structures are to be protected against corrosion according to Pt B, Ch 8, Sec 1.

Suitable coatings for the intended cargoes (in particular for the compatibility with the cargo) are to be chosen and applied in accordance with the manufacturer's requirements.

3.2.2 Cargo hold ceiling

The cargo hold bottom is to be sheathed up to the upper part of bilges by wooden or metallic ceiling of thickness depending on the cargo nature.

Where a side ceiling is provided, it is to be secured every 4-frame spacing to the side frames by an appropriate system.

3.3 Bottom structure

3.3.1 Single bottom vessels are to be fitted with girders in compliance with Pt B, Ch 5, Sec 2, [4.2] or Pt B, Ch 5, Sec 2, [5.3].

3.3.2 Transversely framed single bottom

A single bottom transversely framed is to be fitted with floors at every frame.

3.3.3 Longitudinally framed single bottom

Longitudinal stiffeners are generally to be continuous when crossing primary members.

The section modulus of longitudinals located in way of the web frames of transverse bulkheads is to be increased by 10%.

Longitudinals are to be supported by transverses whose spacing is to be neither greater than 8-frame spacing, nor than 4 m, whichever is less.

3.4 Transversely framed side

3.4.1 Connection of frames with floors

The frames are to be connected to the floors in compliance with Pt B, Ch 5, Sec 3, [4.1].

3.4.2 Connection with deck structure

At the upper end of the frames, connecting brackets are to be provided, in compliance with Pt B, Ch 5, Sec 3, [8]. Such brackets are to extend to the hatch coaming.

3.4.3 Web frames

Web frames are to be fitted with a spacing not exceeding 5 m.

Their scantling is to be performed according to [3.7.2].

3.4.4 Connection of frames to bottom longitudinals

In the case of a longitudinally framed single bottom, the side frames are to be connected to the bottom longitudinal the most at side, either directly, or by means of a bracket.

Similarly, at the frame upper part, connecting brackets are to be provided, extending up to the deck longitudinal the most at side and, even, to the hatch coaming, in general.

3.5 Longitudinally framed side

3.5.1 Side transverses

Side transverses are to be fitted, in general, with a spacing not greater than 8-frame spacing, nor than 4 m.

Their scantling is to be performed according to [3.7.2].

The side transverses are generally directly welded to the shell plating.

In the case of a double bottom, the side transverses are to be bracketed to the bottom transverses.

3.5.2 Side longitudinals

Longitudinal ordinary stiffeners are generally to be continuous when crossing primary supporting members.

In the case the longitudinals are interrupted by a primary supporting member, brackets on both sides of the primary supporting member are to be fitted in perfect alignment.

3.6 Topside structure

3.6.1 Strength continuity

At the ends of the cargo hold space, the members taking part in the overall strength are to be correctly staggered.

Arrangements are to be made to ensure strength continuity of the topside structure at the end of the hatchways. As far as practicable, it is recommended to extend the part of the hatch coaming which is located above deck and to connect it to the side bulkheads of the accommodation spaces.

3.7 Hull scantlings

3.7.1 General

The hull scantlings are to be as specified in Part B, Chapter 5, unless otherwise specified.

3.7.2 Transverse rings

Where necessary, transverse rings are to be fitted to provide additional supports of the stringer plate.

The ring component scantlings are not to be less than the values given in Tab 1.

Table 1 : Net scantling of transverse rings

Primary supporting member		w (cm³)	A_{Sh} (cm²)
Reinforced floors Bottom transverses		$w = \frac{\gamma_R \gamma_m \beta_b p}{m R_y} S B^2 10^3$	$A_{sh} = 10 \gamma_R \gamma_m \beta_s \frac{p}{R_y} S B$
Side webs and side transverses **(1)**	• if $\ell_0 \le \ell$	$w = 26 \frac{\gamma_R \gamma_m \beta_b \ell}{m R_y} S \ell_0^2 10^3$	$A_{sh} = 68 \gamma_R \gamma_m \beta_S \frac{\ell}{R_y} S \ell_0$
	• if $\ell_0 > \ell$	$w = 4,4 \frac{\gamma_R \gamma_m \lambda_b \beta_b p}{m R_y} S \ell^2 10^3$	$A_{sh} = 10 \gamma_R \gamma_m \lambda_S \beta_s \frac{p}{R_y} S \ell$
Strong box beams		see Pt B, Ch 5, Sec 4, [2.4.4]	

Note 1:

p : Design load, in kN/m², defined in Pt B, Ch 5, Sec 1, [2.1]

ℓ_0 : Span parameter, in m: $\ell_0 = p_d / g$

p_d : Total pressure, in kN/m², at the lower end of the stiffener

m : Boundary coefficient, to be taken equal to 8.

(1) Scantlings of web frames and side transverses at the lower end are to be the same as those of floors or bottom transverses connected to them.

3.7.3 Transverse hold bulkhead structure

The number and location of transverse bulkheads are defined in Pt B, Ch 5, Sec 5.

Where necessary, additional bulkheads are to be fitted to provide for sufficient transverse strength of the vessel.

The scantlings of transverse hold bulkheads are not to be less than the values required in Pt B, Ch 5, Sec 5.

a) Vertically framed plate bulkhead

The upper end of the vertical stiffeners is to be connected either to a strong deck box beam or to a stringer located at the stringer plate level or above.

As far as practicable, the bottom of the box beam or the bulkhead end stringer is to be located in the same plane as the stringer plate.

Where this is not the case, the bulkhead plating or the box beam sides are to be fitted with an efficient horizontal framing at that level.

b) Horizontally framed bulkhead

The upper part of horizontally framed bulkheads are to be specially considered by the Society.

c) Plate bulkhead end stringer

The net scantlings of the plate bulkhead end stringer is to be determined, using the following formula:

$$w = \frac{\gamma_R \gamma_m \beta_b p}{m(R_y - \gamma_R \gamma_m \sigma_A)} S \ell^2 10^3$$

where:

p : Bulkhead end stringer design load, in kN/m², to be determined according to Pt B, Ch 2, Sec 5, [3.1]

S : Bulkhead stringer spacing, in m

σ_A : Bulkhead end stringer axial stress, in N/mm²:

$$\sigma_A = \frac{10 q D_1}{A}$$

A : Bulkhead end stringer sectional area, in cm²

q : Distributed transverse load acting on the stringer plate, in kN/m, to be determined as stated in Pt B, Ch 5, Sec 4, [2.4.1]

D_1 : Unsupported stringer plate length, in m, defined in Pt B, Ch 5, Sec 4, [2.4.2].

In way of hold end bulkheads, D_1 is to be substituted by 0,5 D_1

m : Boundary coefficient, to be taken equal to 8.

4 Double hull general cargo vessels

4.1 General

4.1.1 Application

The requirements of this Article apply to open deck vessels of double hull construction, intended primarily to carry general cargoes.

The loading/unloading may be performed in one or two runs.

4.1.2 Protection of cargo holds

All metallic structures are to be protected against corrosion according to Pt B, Ch 8, Sec 1.

Suitable coatings for the intended cargoes (in particular for the compatibility with the cargo) are to be chosen and applied in accordance with the manufacturer's requirements.

4.2 Welding

4.2.1 General

Welding is to comply with the requirements of Pt B, Ch 8, Sec 2.

4.2.2 Arrangements applying to the shell plating and the double hull

Transverse butts are to be butt welded. Double bottom butts may be welded in way of floor face plate which then acts as a support.

The longitudinal joints are to be obtained either by butt welding or by overlap welding. In the second case, the outer line welding is to be continuous with a throat thickness of 0,5 t, whereas the inner line of welding may be discontinuous with a ratio p/d < 4 and a throat thickness of 0,5 t; however, for spaces which are not accessible after construction, the inner weld is to be carried out with a continuous line welding.

4.2.3 Arrangements applying to the topside plating

Butt weldings are to be carried out on the transverse butts of the sheerstrake, stringer plate and coaming.

4.2.4 Connection of inner bottom with floors

Where the floors cannot be welded to the inner bottom by means of fillet welds, the connection may be obtained by slot welds, in compliance with Pt B, Ch 8, Sec 2, [2.7]. In that case, the floors are to be fitted with flange of adequate width.

4.3 Transversely framed double side

4.3.1 Structural arrangement

Where the inner side does not extend down to the outer bottom, it is to be held in position by means of brackets or vertical stiffeners fitted to the floors.

Adequate continuity strength is to be ensured in way of changes in width of the double side. In particular, scarfing of the inner side is to be ensured beyond the cargo hold region.

4.3.2 Side and inner side frames

At their upper end, side and inner side frames are to be connected by means of a bracket. This bracket can be a section or a flanged plate with a section modulus at least equal to the one of the side web frames.

Where the outer and inner side frames are connected by means of struts located at mid-span, their section modulus may be reduced by 30%.

The strut sectional area is to be not less than those of the connected frames.

At their lower end, the frames are to be adequately connected to the floors or top tank.

4.3.3 Side and inner side web frames

It is recommended to provide side web frames, fitted every 3 m and, in general, not more than 6-frame spacings apart.

At their upper end, side and inner side web frames are to be connected by means of a bracket. This bracket can be a section or a flanged plate with a section modulus at least equal to the one of the side web frames. An attached plating strip, where applicable, may be taken into account.

The web frames are to be connected at their mid-span by means of struts, the cross sectional area of which is not to be less than those of the connected web frames.

At their lower end, the web frames are to be adequately connected to the floors or top tank.

4.3.4 Plate webs

Plate webs may be fitted in addition or instead of web frames.

Plate webs are to be fitted with horizontal stiffeners, the spacing of which is not to be greater than 1 m.

The scantling of plate webs with large openings is to be examined by the Society on a case by case basis.

4.4 Longitudinally framed double side

4.4.1 Inner side plating

The requirements of [4.3.1] also apply to longitudinally framed double side, with the transverses instead of web frames.

4.4.2 Side and inner side longitudinals

Where the outer and inner side longitudinals are connected by means of struts located at mid-span, their section modulus may be reduced by 30%.

The strut sectional area is to be not less than those of the connected longitudinals.

4.4.3 Side transverses

The requirements of [4.3.3] also apply to longitudinally framed double side, with the transverses instead of web frames.

4.4.4 Plate webs

The requirements of [4.3.4] also apply to longitudinally framed double side.

4.5 End structure

4.5.1 Arrangements for self-propelled vessels

At the ends of the cargo hold space, the strength continuity of members taking part in the overall strength is to be adequately ensured.

In particular, arrangements are to be made to ensure strength continuity of the top structure at the end of the hatchways. As far as practicable, it is recommended to extend the part of the hatch coaming located above deck and to connect it to the side bulkheads of the accommodation spaces.

The longitudinal boundaries of the engine room side bunkers are to be located, as far as practicable, in the extension of the double hull sides.

4.5.2 Arrangements for pushed vessels

Where the compartments outside the cargo hold space are of small size, the strength continuity is to be ensured by scarfing of strength members.

The double hull sides are to be extended, in the shape of brackets, outside the cargo hold space over a distance equal to twice the stringer plate width.

Strength continuity of the inner bottom is to be ensured by means of brackets, one of which is to be along the vessel centreline. Where the vessel ends are built on the longitudinal system, the brackets are to be connected to the bottom longitudinals; otherwise, they are to be connected to keelsons.

Pushing transoms, if any, are to be designed in compliance with Pt B, Ch 7, Sec 6, [2.2].

4.6 Hull scantlings

4.6.1 General

The hull scantlings and arrangements are to be determined according to Part B, Chapter 5, unless otherwise specified.

4.6.2 General arrangements of double bottom structure

Where the inner side plating does not extend down to the bottom plating, the floors of vessels built in the transverse system are to be stiffened, at each frame, in way of the inner side plating, by means of a section, the net sectional area of which, in cm^2, is not to be less than:

$A = 0,01\ b\ t_F$

where:

t_F : Net thickness of floor web, in mm

b : Section height, in mm:

$b = 100\ H_D$

H_D : Double bottom height, in m.

As a rule, manholes are not to be provided into the centre-line girder.

4.6.3 Transverse hold bulkhead structure

Arrangements and scantlings of transverse hold bulkheads are to be in compliance with Pt B, Ch 5, Sec 5.

SECTION 2 BULK CARGO VESSELS

Symbols

A_{SH} : Net web sectional area, in cm²

B : Breadth, in m, defined in Pt B, Ch 1, Sec 2, [2.2]

D : Depth, in m, defined in Pt B, Ch 1, Sec 2, [2.3]

g : Gravitational acceleration:

$g = 9,81 \text{ m/s}^2$

k : Material factor defined in:
- Pt B, Ch 2, Sec 3, [2.3] for steel
- Pt B, Ch 2, Sec 3, [3.5] for aluminium alloys

L : Rule length, in m, defined in Pt B, Ch 1, Sec 2, [2.1]

R_y : Minimum yield stress, in N/mm², of the material to be taken equal to:
- R_y= 235/k N/mm² for steel
- R_y= 100/k N/mm² for aluminium alloys

unless otherwise specified

S : Spacing, in m, of primary supporting members

s : Spacing, in m, of ordinary stiffeners

T : Scantling draught, in m, defined in Pt B, Ch 1, Sec 2, [2.4]

T_1 : Draught associated with each cargo and ballast distribution, in m, defined in Pt B, Ch 3, Sec 1, [2.4.3]

t : Net thickness, in mm, of plating

w : Net section modulus, in cm³, of ordinary stiffeners or primary supporting members

β_b, β_S : Span correction coefficients defined in Pt B, Ch 2, Sec 4, [5.2]

γ_R : Partial safety factor covering uncertainties regarding resistance, defined in Pt B, Ch 5, Sec 1, [1.3]

γ_m : Partial safety factor covering uncertainties regarding material, defined in Pt B, Ch 5, Sec 1, [1.3]

λ_b, λ_s : Coefficients for pressure distribution correction defined in Pt B, Ch 2, Sec 4, [6.3]

ℓ : Stiffener span, in m.

1 General

1.1 Application

1.1.1 Vessels complying with the requirements of this Section are eligible for the assignment of the service notation **Bulk cargo vessel**, as defined in Pt A, Ch 1, Sec 3, [2.1.1].

1.1.2 Vessels dealt with in this Section are to comply with the requirements stipulated in Part A, Part B and Part C of the Rules, as applicable, and with the requirements of this Section, which are specific to bulk cargo vessels.

1.2 Estimated still water design bending moments

1.2.1 Estimated still water design bending moments are to be determined in compliance with Pt B, Ch 3, Sec 2. If parameters X_{AV} and X_{AR} are not known, they are not to be taken less than:

$$X_3 = \frac{p_S}{19,6\rho_B \tan\varphi_B}$$

where:

p_S : Bottom or inner bottom still water design pressure, in kN/m², defined in Pt B, Ch 3, Sec 4, [3.2.3]

ρ_B, φ_B : Dry bulk cargo density, in t/m³, and angle of repose, in degree.

1.3 Direct calculation

1.3.1 The following requirements apply to the analysis of primary supporting members.

Direct calculation is to be carried out in compliance with Pt B, Ch 2, Sec 8, [2].

1.3.2 Loading conditions and load cases in service conditions

The loads are to be calculated for the most severe loading conditions, with a view to maximising the stresses in the primary supporting members.

The following loading conditions are generally to be considered:

a) Harbour
- full cargo load in hold/vessel at the relevant draught T_1
- empty hold/vessel at the relevant draught T_1

b) Navigation
- full cargo load/vessel at the scantling draught T
- lightship/vessel at the relevant draught T_1.

1.3.3 Structure checks

The following checks are to be carried out:

- level of normal stresses and shear stresses, in particular in way of holes and passage of longitudinals
- buckling strength of unstiffened webs
- for double hull vessels, continuity of double bottom in side tanks.

2 Stability

2.1 General

2.1.1 The Society may waive the requirements of this Article depending on the vessel design and operating conditions.

2.1.2 The general requirements of Pt B, Ch 2, Sec 2 are to be complied with.

2.2 Semi-liquid cargo

2.2.1 For a bulk dry cargo likely to redistribute itself if the vessel lists to an inclination greater than its angle of repose, such as grain or cement (semi-liquid cargo), requirements of [2.2.2], [2.2.3] and [2.2.4] are to be additionally complied with.

2.2.2 Stowage of cargo

a) Trimming

All necessary and reasonable trimming is to be performed to level all free cargo surfaces and minimise the effect of cargo shifting.

b) Cargo securing

Unless account is taken of the adverse heeling effect due to cargo shift according to these Rules, the surface of the bulk cargo in any partially filled compartment is to be secured so as to prevent a cargo shift by overstowing.

c) Longitudinal subdivisions

The proper precaution is to fit one or more temporary longitudinal subdivisions in the holds or compartments to minimise the possibility of shift of cargo.

2.2.3 Calculation of the heeling moment due to cargo shifting

The heeling moment due to cargo shifting is to be determined in relation with the hold or compartment geometry, assuming an angle to the horizontal of the resulting cargo surface after shifting of 12°.

2.2.4 Additional intact stability criteria

The intact stability characteristics of any vessel carrying bulk dry cargo likely to redistribute itself if the vessel lists to an inclination greater than its angle of repose, such as grain or cement, are to be shown to meet, throughout the voyage, at least the following criteria after taking into account the heeling moment due to cargo shifting (see Fig 1):

- the angle of heel φ_1 due to the shift of cargo is not to be greater than 12° or the angle at which the deck edge is immersed, whichever is the lesser
- in statical stability diagram, the net or residual area between the heeling arm curve and the righting arm curve up to the angle of heel φ_2 of maximum difference between the ordinates of the two curves, or 27° or the angle of flooding, whichever is the lesser, is in all conditions of loading to be not less than 0,024 m·rad
- the initial metacentric height, after correction for the free surface effects of liquids in tanks, as specified in Pt B, Ch 2, Sec 2, [2.3], is to be not less than 0,15 m.

Figure 1 : Stability curve

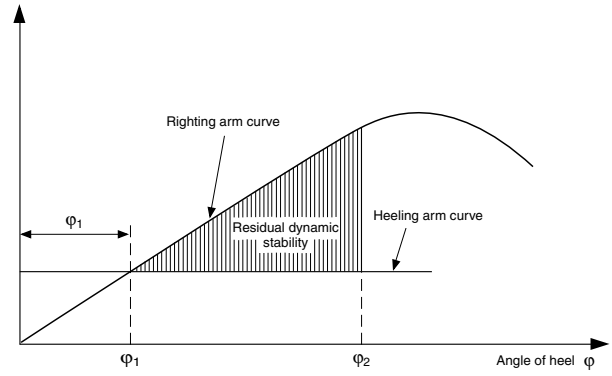

3 Single side bulk cargo vessels

3.1 General

3.1.1 Application

The requirements of this Article apply to open deck vessels of single side construction, with or without double bottom, intended primarily to carry bulk dry cargoes.

The loading/unloading may be performed in one or two runs.

3.2 Protection of cargo holds

3.2.1 Coating

All metallic structures are to be protected against corrosion according to Pt B, Ch 8, Sec 1.

Suitable coatings for the intended cargoes (in particular for the compatibility with the cargo) are to be chosen and applied in accordance with the manufacturer's requirements.

3.2.2 Cargo hold ceiling

The cargo hold bottom is to be sheathed up to the upper part of bilges by wooden or metallic ceiling of thickness depending on the cargo nature.

Where a side ceiling is provided, it is to be secured every 4-frame spacing to the side frames by an appropriate system.

3.3 Bottom structure

3.3.1 Single bottom vessels are to be fitted with girders in compliance with Pt B, Ch 5, Sec 2, [4.2] or Pt B, Ch 5, Sec 2, [5.3].

3.3.2 Transversely framed single bottom

A single bottom transversely framed is to be fitted with floors at every frame.

3.3.3 Longitudinally framed single bottom

Longitudinal stiffeners are generally to be continuous when crossing primary members.

The section modulus of longitudinals located in way of the web frames of transverse bulkheads is to be increased by 10%.

Longitudinals are to be supported by transverses whose spacing is to be not greater than 8-frame spacing, nor than 4 m, whichever is less.

3.4 Transversely framed side

3.4.1 Connection of frames with floors

The frames are to be connected to the floors in compliance with Pt B, Ch 5, Sec 3, [4.1].

3.4.2 Connection with deck structure

At the upper end of frames, connecting brackets are to be provided, in compliance with Pt B, Ch 5, Sec 3, [8]. Such brackets are to extend to the hatch coaming.

3.4.3 Web frames

Web frames are to be fitted with a spacing not exceeding 5 m.

Their scantling is to be performed according to [3.7.2].

3.4.4 Connection of frames to bottom longitudinals

In the case of a longitudinally framed single bottom, the side frames are to be connected to the bottom longitudinal the most at side, either directly or by means of a bracket.

Similarly, at the frame upper part, connecting brackets are to be provided, extending up to the deck longitudinal the most at side and, even, to the hatch coaming, in general.

3.5 Longitudinally framed side

3.5.1 Side transverses

Side transverses are to be fitted, in general, with a spacing not greater than 8-frame spacing, nor than 4 m.

Their scantling is to be performed according to [3.7.2].

The side transverses are generally directly welded to the shell plating.

In the case of a double bottom, the side transverses are to be bracketed to the bottom transverses.

3.5.2 Side longitudinals

Longitudinal ordinary stiffeners are generally to be continuous when crossing primary supporting members.

In the case the longitudinals are interrupted by a primary supporting member, brackets on both sides of the primary supporting member are to be fitted in perfect alignment.

3.6 Topside structure

3.6.1 Strength continuity

At the ends of the cargo hold space, the members taking part in the overall strength are to be correctly staggered.

Arrangements are to be made to ensure strength continuity of the topside structure at the end of the hatchways. As far as practicable, it is recommended to extend the part of the hatch coaming which is located above deck and to connect it to the side bulkheads of the accommodation spaces.

3.7 Hull scantlings

3.7.1 General

The hull scantlings are to be as specified in Part B, Chapter 5, unless otherwise specified.

3.7.2 Transverse rings

Where necessary, transverse rings are to be fitted to provide additional supports of the stringer plate.

The ring component scantlings are not to be less than the values given in Tab 1.

3.7.3 Transverse hold bulkhead structure

The number and location of transverse bulkheads are defined in Pt B, Ch 5, Sec 5.

Where necessary, additional bulkheads are to be fitted to provide for sufficient transverse strength of the vessel.

The scantlings of transverse hold bulkheads are not to be less than the values required in Pt B, Ch 5, Sec 5.

a) Vertically framed plate bulkhead

The upper end of the vertical stiffeners is to be connected either to a strong deck box beam or to a stringer located at the stringer plate level or above.

As far as practicable, the bottom of the box beam or the bulkhead end stringer is to be located in the same plane as the stringer plate.

Where this is not the case, the bulkhead plating or the box beam sides are to be fitted with an efficient horizontal framing at that level.

b) Horizontally framed bulkhead

The upper part of horizontally framed bulkheads are to be specially considered by the Society.

c) Plate bulkhead end stringer

The net scantlings of the plate bulkhead end stringer is to be determined using the following formula:

$$w = \frac{\gamma_R \gamma_m \beta_b p}{m(R_y - \gamma_R \gamma_m \sigma_A)} S \ell^2 10^3$$

where:

p : Bulkhead end stringer design load, in kN/m², to be determined using applicable formulae given in Pt B, Ch 3, Sec 4, [3]

S : Bulkhead stringer spacing, in m

σ_A : Bulkhead end stringer axial stress, in N/mm²:

$$\sigma_A = \frac{10 q D_1}{A}$$

A : Bulkhead end stringer sectional area, in cm²

q : Distributed transverse load acting on the stringer plate, in kN/m, to be determined as stated in Pt B, Ch 5, Sec 4, [2.4.1]

D_1 : Unsupported stringer plate length, in m, defined in Pt B, Ch 5, Sec 4, [2.4.2].

In way of hold end bulkheads, D_1 is to be substituted by 0,5 D_1

m : Boundary coefficient, to be taken equal to 8.

Table 1 : Net scantling of transverse rings

Primary supporting member		w (cm³)	A_{Sh} (cm²)
Reinforced floors Bottom transverses		$w = \frac{\gamma_R \gamma_m \beta_b p}{m R_y} S B^2 10^3$	$A_{sh} = 10 \gamma_R \gamma_m \beta_s \frac{p}{R_y} S B$
Side webs and side transverses **(1)**	• if $\ell_0 \le \ell$	$w = 26 \frac{\gamma_R \gamma_m \beta_b \ell}{m R_y} S \ell_0^2 10^3$	$A_{sh} = 68 \gamma_R \gamma_m \beta_S \frac{\ell}{R_y} S \ell_0$
	• if $\ell_0 > \ell$	$w = 4,4 \frac{\gamma_R \gamma_m \lambda_b \beta_b p}{m R_y} S \ell^2 10^3$	$A_{sh} = 10 \gamma_R \gamma_m \lambda_S \beta_s \frac{p}{R_y} S \ell$
Strong box beams		see Pt B, Ch 5, Sec 4, [2.4.4]	

(1) Scantlings of web frames and side transverses at the lower end are to be the same as those of floors or bottom transverses connected to them.

Note 1:

p : Design load, in kN/m², defined in Pt B, Ch 5, Sec 1, [2.1]

ℓ_0 : Span parameter, in m:
$\ell_0 = p_d / g$

p_d : Total pressure, in kN/m², at the lower end of the stiffener

m : Boundary coefficient, to be taken equal to 8.

3.7.4 Strengthening of cargo hold structures

In case of grab loading/unloading, the scantlings of structural elements within the cargo hold are to be increased according to Ch 2, Sec 10, [2].

4 Double hull bulk cargo vessels

4.1 General

4.1.1 Application

The requirements of this Article apply to open deck vessels of double hull construction, intended primarily to carry bulk dry cargoes.

The loading/unloading may be performed in one or two runs.

4.1.2 Protection of cargo holds

All metallic structures are to be protected against corrosion according to Pt B, Ch 8, Sec 1.

Suitable coatings for the intended cargoes (in particular for the compatibility with the cargo) are to be chosen and applied in accordance with the manufacturer's requirements.

4.2 Welding

4.2.1 General

Welding is to comply with the requirements of Pt B, Ch 8, Sec 2.

4.2.2 Arrangements applying to the shell plating and the double hull

Transverse butts are to be butt welded. Double bottom butts may be welded in way of floor faceplate which then acts as a support.

The longitudinal joints are to be obtained either by butt welding or by overlap welding. In the second case, the outer line welding is to be continuous with a throat thickness of 0,5 t, whereas the inner line of welding may be discontinuous with a ratio p/d < 4 and a throat thickness of 0,5 t; however, for spaces which are not accessible after construction, the inner weld is to be carried out with a continuous line welding.

4.2.3 Arrangements applying to the topside plating

Butt weldings are to be carried out on the transverse butts of the sheerstrake, stringer plate and coaming.

4.2.4 Connection of inner bottom with floors

Where the floors cannot be welded to the inner bottom by means of fillet welds, the connection may be obtained by slot welds, in compliance with Pt B, Ch 8, Sec 2, [2.7]. In that case, the floors are to be fitted with flange of adequate width.

4.3 Transversely framed double side

4.3.1 Structural arrangement

Where the inner side does not extend down to the outer bottom, it is to be held in position by means of brackets or vertical stiffeners fitted to the floors.

Adequate continuity strength is to be ensured in way of changes in width of the double side. In particular, scarfing of the inner side is to be ensured beyond the cargo hold region.

4.3.2 Side and inner side frames

At their upper end, side and inner side frames are to be connected by means of a bracket. This bracket can be a section or a flanged plate with a section modulus at least equal to the one of the side web frames.

Where the outer and inner side frames are connected by means of struts located at mid-span, their section modulus may be reduced by 30%.

The strut sectional area is to be not less than those of the connected frames.

At their lower end, the frames are to be adequately connected to the floors or top tank.

4.3.3 Side and inner side web frames

It is recommended to provide side web frames, fitted every 3 m and, in general, not more than 6-frame spacings apart.

At their upper end, side and inner side web frames are to be connected by means of a bracket. This bracket can be a section or a flanged plate with a section modulus at least equal to the one of the side web frames. An attached plating strip, where applicable, may be taken into account.

The web frames are to be connected at their mid-span by means of struts, the cross sectional area of which is not to be less than those of the connected web frames.

At their lower end, the web frames are to be adequately connected to the floors or top tank.

4.3.4 Plate webs

Plate webs may be fitted in addition or instead of web frames.

Plate webs are to be fitted with horizontal stiffeners, the spacing of which is not to be greater than 1 m.

The scantling of plate webs with large openings is to be examined by the Society on a case by case basis.

4.4 Longitudinally framed double side

4.4.1 Inner side plating

The requirements of [4.3.1] also apply to longitudinally framed double side, with the transverses instead of web frames.

4.4.2 Side and inner side longitudinals

Where the outer and inner side longitudinals are connected by means of struts located at mid-span, their section modulus may be reduced by 30%.

The strut sectional area is to be not less than those of the connected longitudinals.

4.4.3 Side transverses

The requirements of [4.3.3] also apply to longitudinally framed double side, with the transverses instead of web frames.

4.4.4 Plate webs

The requirements of [4.3.4] also apply to longitudinally framed double side.

4.5 End structure

4.5.1 Arrangements for self-propelled vessels

At the ends of the cargo hold space, the strength continuity of members taking part in the overall strength is to be adequately ensured.

In particular, arrangements are to be made to ensure strength continuity of the top structure at the end of the hatchways. As far as practicable, it is recommended to extend the part of the hatch coaming located above deck and to connect it to the side bulkheads of the accommodation spaces.

The longitudinal boundaries of the engine room side bunkers are to be located, as far as practicable, in the extension of the double hull sides.

4.5.2 Arrangements for pushed vessels

Where the compartments outside the cargo hold space are of small size, the strength continuity is to be ensured by scarfing of strength members.

The double hull sides are to be extended, in the shape of brackets, outside the cargo hold space over a distance equal to twice the stringer plate width.

Strength continuity of the inner bottom is to be ensured by means of brackets, one of which is to be along the vessel centreline. Where the vessel ends are built on the longitudinal system, the brackets are to be connected to the bottom longitudinals; otherwise, they are to be connected to keelsons.

Pushing transoms, if any, are to be designed in compliance with Pt B, Ch 7, Sec 6, [2.2].

4.6 Hull scantlings

4.6.1 General

The hull scantlings and arrangements are to be determined according to Part B, Chapter 5, unless otherwise specified.

4.6.2 General arrangements of double bottom structure

Where the inner side plating does not extend down to the bottom plating, the floors of vessels built in the transverse system are to be stiffened, at each frame, in way of the inner side plating, by means of a section, the net sectional area of which, in cm^2, is not to be less than:

$A = 0{,}01\ b\ t_F$

where:

t_F : Net thickness of floor web, in mm

b : Section height, in mm:

$b = 100\ H_D$

H_D : Double bottom height, in m.

As a rule, manholes are not to be provided into the centreline girder.

4.6.3 Transverse hold bulkhead structure

Arrangements and scantlings of transverse hold bulkheads are to be in compliance with Pt B, Ch 5, Sec 5.

4.6.4 Strengthening of cargo hold structure

In case of grab loading/unloading, the scantlings of structural elements within the cargo hold are to be increased according to Ch 2, Sec 10, [2].

SECTION 3 TANKERS

Symbols

B : Breadth, in m, defined in Pt B, Ch 1, Sec 2, [2.2]

D : Depth, in m, defined in Pt B, Ch 1, Sec 2, [2.3]

k : Material factor defined in:

- Pt B, Ch 2, Sec 3, [2.3] for steel
- Pt B, Ch 2, Sec 3, [3.5] for aluminium alloys

k_0 : Coefficient to be taken equal to:

- k_0= 1 for steel
- k_0= 2,35 for aluminium alloys

L : Rule length, in m, defined in Pt B, Ch 1, Sec 2, [2.1]

s : Spacing of ordinary stiffeners, in m

T : Scantling draught, in m, defined in Pt B, Ch 1, Sec 2, [2.4]

T_1 : Draught associated with each cargo and ballast distribution, in m, defined in Pt B, Ch 3, Sec 1, [2.4.3]

t : Net thickness, in mm, of plating.

1 General

1.1 Application

1.1.1 Vessels complying with the requirements of this Section are eligible for the assignment of the service notation **Tanker**, as defined in Pt A, Ch 1, Sec 3, [3.1.1].

1.1.2 Vessels dealt with in this Section are to comply with the requirements stated in Part A, Part B and Part C of the Rules, as applicable, and with the requirements of this Section, which are specific to tankers.

2 Stability

2.1 General

2.1.1 The Society may waive the requirements of this Article depending on the vessel design and operating conditions.

2.1.2 The general requirements of Pt B, Ch 2, Sec 2, [1] to Pt B, Ch 2, Sec 2, [3] are to be complied with.

2.2 Intact stability

2.2.1 The stability of tankers for all intended loading conditions is to comply with Pt B, Ch 2, Sec 2, [4].

3 Vessel arrangement

3.1 Basic structural configuration

3.1.1 Single hull tankers

In a single hull tanker (see Fig 1), the cargo tanks are bounded by the vessel outer shell, which means the bottom, the sides of the shell plating and the decks simultaneously act as tank walls.

3.1.2 Double hull tankers

As it is the case for a single hull tanker, the cargo tanks form part of the vessel structure. However, the bottom and side plating does not function simultaneously as tank walls (see Fig 2). For certain products, minimum distances between tank boundaries and bottom or side plating are to be observed. Accessibility is, however, to be guaranteed in every case.

3.1.3 Tankers with inserted cargo tanks

In this type of vessel, the cargo tanks are independent of the vessel structure but are permanently installed (see Fig 3).

3.1.4 Tankers with membrane cargo tank

Membrane cargo tanks are non-self supporting cargo tanks that consists of a thin liquid and gastight layer (membrane) supported through insulation by the adjacent hull structure.

Membrane cargo tanks are installed in hold spaces bounded by double hull spaces and double bottom (see Fig 4).

3.2 Minimum side tank width

3.2.1 The side tank width is to be not less than 600 mm.

4 Stability

4.1 Tankers carrying dangerous goods

4.1.1 For vessels carrying dangerous goods, see Part D, Chapter 3.

4.2 Other tankers

4.2.1 Where the tank breadth exceeds 0,7 B, cargo tanks are normally to be provided with centre longitudinal bulkheads. Where the tank breadth is greater than the figure mentioned and centre longitudinal bulkheads are not fitted, proof of sufficient intact stability according to Pt B, Ch 2, Sec 2, [4] is to be furnished.

Figure 1 : Single hull tankers

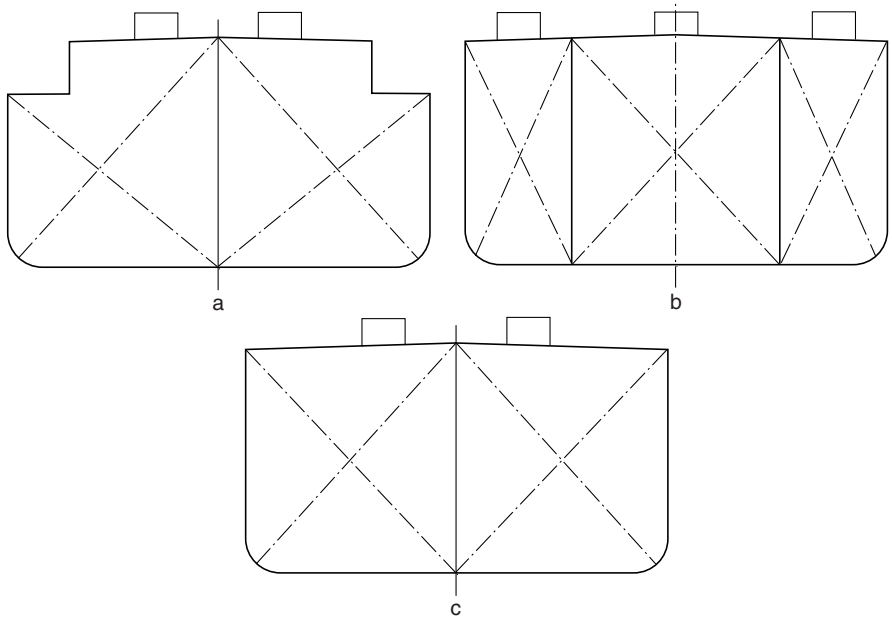

Figure 2 : Double hull tankers

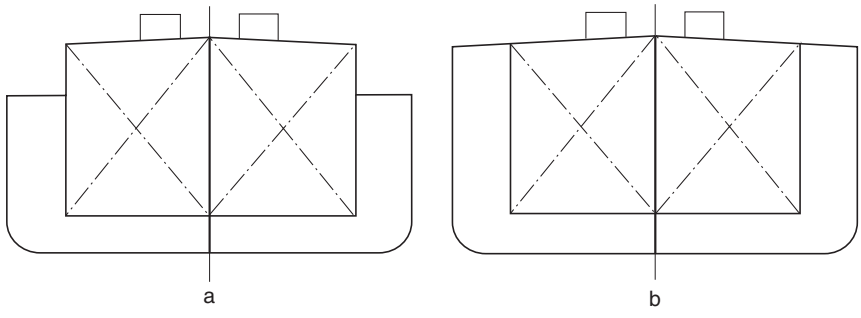

Figure 3 : Inserted cargo tank

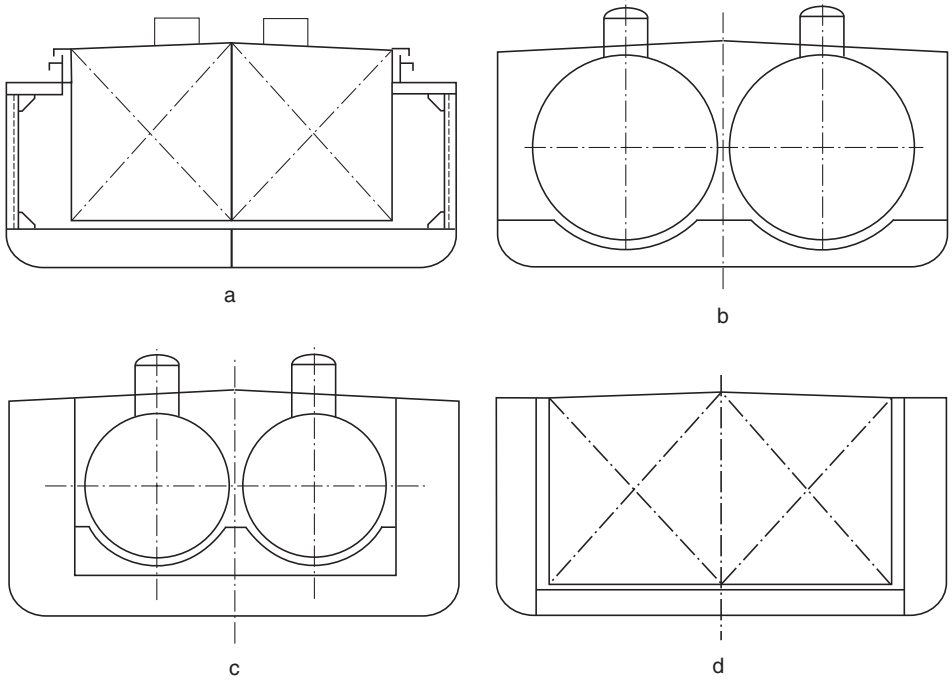

Figure 4 : Membrane cargo tank

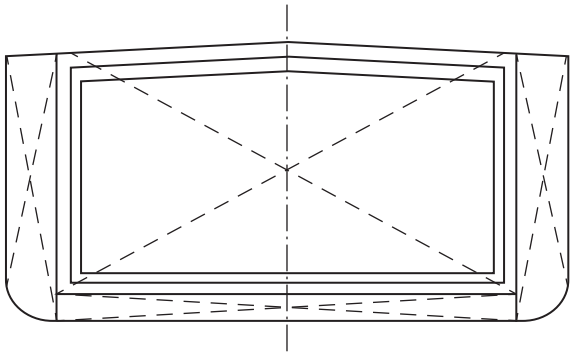

5 Machinery and systems

5.1 Bilge system

5.1.1 Size of bilge pipes

The inside diameter of the bilge lines shall not be taken less than 50 mm nor than the values derived from the following formulae:

- main pipe:

$$d_1 = 3,0\sqrt{(B+D)\ell_1} + 35$$

- branch pipe:

$$d_2 = 2,0\sqrt{(B+D)\ell} + 25$$

where:

ℓ_1 : Total length, in m, of spaces between cofferdam or cargo bulkhead and stern tube bulkhead

d_1 : Inside diameter of main bilge pipe, in mm

d_2 : Inside diameter of branch bilge pipe, in mm

ℓ : Length of the watertight compartment, in m.

6 Hull scantlings

6.1 General

6.1.1 The hull scantlings are to be determined as specified in Part B, Chapter 5, using the adequate design loads, unless otherwise specified in this Article.

In the cargo tank area, including cofferdams, the net thickness of plates and structural members in spaces intended to contain liquids are not to be less than 4,4 mm.

6.1.2 Independent tanks

Scantlings of independent tanks are to be determined in compliance with Part B, Chapter 5, where the hull girder stresses may be taken equal to zero.

6.1.3 Thermal stresses

Where heated liquids are intended to be carried in tanks, a calculation of thermal stresses is required, if the carriage temperature of the liquid exceeds 90°C.

The calculations are to be carried out for both temperatures, the actual carriage temperature and the limit temperature specified hereabove.

The calculations are to give the resultant stresses in the hull structure based on a water temperature of 0°C and an air temperature of –5°C.

Constructional measures and/or strengthenings will be required on the basis of the results of the calculation for both temperatures.

6.2 Other requirements

6.2.1 Minimum net thickness of web plating

The net thickness, in mm, of the web plating of ordinary stiffeners is to be not less than:

- for L < 120 m:

  $t = 1,63 + 0,004\ L\ (k_0k)^{0,5} + 4,5\ s$

- for L ≥ 120 m:

  $t = 3,9\ (k_0k)^{0,5} + s$

The net thickness, in mm, of plating which forms the web of primary supporting members is to be not less than the value obtained from the following formula:

$t = 1,14\ L^{1/3}\ (k_0k)^{0,5}$

7 Transverse rings

7.1 General

7.1.1 The strength check of the transverse rings is to be performed by direct calculation according to Pt B, Ch 2, Sec 8, [2].

In particular, the requirements of [7.2] to [7.4] are to be complied with.

7.1.2 Loading conditions and load cases

The loads are to be calculated for the most severe loading conditions, with a view to maximising the stresses in the primary supporting members.

The following loading conditions are generally to be considered:

a) Harbour
   - full cargo load in tank/vessel at the relevant draught T_1
   - empty cargo tank/vessel at the relevant draught T_1

b) Navigation
   - full cargo load/vessel at the scantling draught T
   - lightship/vessel at the relevant draught T_1

c) Testing conditions
   - fully loaded cargo tank subjected to test pressure (see Pt B, Ch 3, Sec 4, [5]).

7.2 Floors and bottom transverses in way of rings

7.2.1 The following checks are to be carried out:

- level of shear stresses, in particular in way of holes and passage of longitudinals
- buckling strength of unstiffened webs
- continuity of double bottom in the side tanks.

7.3 Web frames and side transverses in way of rings

7.3.1 For side primary supporting members, the level of normal stresses and shear stresses in way of holes and passage of longitudinals is to be checked.

7.4 Strong beams and deck transverses in way of rings

7.4.1 The following checks are to be carried out:

- level of normal stresses and shear stresses, in particular, in way of holes and passage of longitudinals
- buckling strength of unstiffened web
- continuity of structure and lateral support of deck transverses, notably, when the flange of the deck transverse is a round bar.

7.5 Pillars

7.5.1 Strong beams and deck transverses in way of rings are to be supported by pillars. The pillar scantlings are to be determined according to Pt B, Ch 5, Sec 4, [8], where the deck pressure is not to be taken less than 5 kN/m^2. The pillars and their attachments are also to be examined for traction resulting from the relevant test pressure related to the respective vessel type.

7.5.2 Tubular pillars are to be avoided in the cargo tanks as far as possible. For tank vessels intended to carry flammable liquids or chemicals, tubular pillars are not permitted.

7.5.3 The pillars are to be attached to the girders as well as to the floor plates located below by means of welding.

7.6 Break in the deck

7.6.1 A reinforced deck transverse, pillars or a transverse bulkhead is to be fitted in way of the deck break.

8 Vessel structural arrangements

8.1 Vessels with integrated tanks, transverse framing system

8.1.1 Beams

Beams are to be fitted at every frame. They are to be discontinuous in way of longitudinal bulkheads, to which they are connected with brackets. Deck beams are not to be discontinuous in way of expansion tanks, unless efficient compensations are provided.

8.1.2 Strong beams

As a rule, strong beams are to have the same scantlings as side web frames to which they are connected by brackets or any other equivalent arrangement, so as to ensure strength continuity.

8.1.3 Floors

Floors are to be fitted at every frame. They are to be discontinuous in way of bulkheads to which they are connected by means of brackets or other equivalent arrangement ensuring strength continuity.

An adequate number of limbers is to be cut out in floors, longitudinals and transverses to ensure the draining of cargo to the pump suctions.

8.2 Vessels with integrated tanks, longitudinal framing system

8.2.1 Side transverses

The side transverses are to be spaced not more than 3 m apart.

The span of side shell strength transverses is to be taken equal to the vertical distance between bottom and deck.

8.2.2 Deck longitudinals

The deck longitudinals are to be continuous through expansion tanks, unless efficient compensations are fitted.

8.3 Vessels with integrated tanks, combination system

8.3.1 Web frames

It is recommended to provide side shell and longitudinal bulkhead web frames in way of bottom and deck transverses.

8.4 Vessels with independent tanks

8.4.1 General

Vessels with independent tanks are to be built on the transverse framing system. When a longitudinal framing system is applied, it is to be specially considered by the Society.

8.4.2 Stiffening

The side stiffeners may be inside or outside the tank.

When tank longitudinal sides are framed vertically, stiffeners are to form continuous frames with the top and bottom stiffeners, whether the frames are connected or not by brackets.

The vertical or horizontal stiffeners of transverse sides are to be welded on to the perpendicular tank sides, either directly or by means of brackets extending up to the first stiffener of previous sides.

To ensure proper contact between tank plates and vessel bottom, the bottom structure is to be adequately stiffened.

8.4.3 Floors

In way of floors not in contact with tanks, for instance floors located between tanks and floors at hold ends, at least two keelsons with intercostal plating are to be provided. The keelsons are to be fitted approximately at one-third of the width and extending at least over three frame spaces beyond tank end bulkheads.

8.5 Double hull arrangements

8.5.1 General

All parts of the cargo zone are to be well ventilated and accessible to ensure surveys and maintenance.

8.5.2 Floor reinforcement

Where the inner side plating does not extend down to the bottom plating, the floors of vessels built in the transverse system are to be stiffened, at each frame, in way of the double hull shell plating, by means of a section, the net sectional area of which, in cm^2, is not to be less than:

$A = 0,01\ b\ t_F$

where:

b : Section height, in mm, equal to:

$b = 100\ H_D$

where H_D is the double bottom height, in m

t_F : Net thickness of floor web, in mm.

8.6 Ends of cargo zone

8.6.1 The inner longitudinal side is to be extended inside the cofferdam. Moreover, when possible, it is to be extended in the fore and aft ends of the vessel by means of brackets.

9 Supports of independent cargo tanks

9.1 Structural arrangement

9.1.1 General

The reaction forces in way of tank supports are to be transmitted as directly as possible to the hull primary supporting members, minimising stress concentrations.

Where the reaction forces are not in the plane of primary members, web plates and brackets are to be provided in order to transmit these loads through shear stresses.

Stress concentrations in the tank walls are to be avoided, and care is to be taken to ensure that the tank seatings do not impede the contraction of the tank when cooled down to the transport temperature.

9.1.2 Chocking of tanks

The tank seatings are to be constructed in such a way as to make it impossible for the tanks to move in relation to the vessel structure.

The tanks are to be supported by floors or bottom longitudinals.

When the stringer plate is chocked against tanks in way of some web frames or side shell transverses, chocking may consist in a bolted assembly. In case of applying wedges in hard wood or synthetic material capable of transmitting the chocking stress, arrangements are to be provided to avoid an accidental shifting during navigation.

9.1.3 Anti-flotation arrangements

Anti-flotation arrangements are to be provided for independent tanks. The anti-flotation arrangements are to be suitable to withstand an upward force caused by an empty tank in a hold space flooded to the damage draught of the vessel, without plastic deformation likely to endanger the hull structure.

9.1.4 Openings

In primary supporting members and hull structures in way of tank supports, openings are to be avoided and local strengthening may be necessary.

9.2 Loads and load cases

9.2.1 The design of the tank supports is to be based on the following assumed forces.

Relaxation of the following may be granted by the Society on a case by case basis.

a) In the vertical direction:
- the weight of the filled tanks acting downwards
- the buoyancy of the empty tanks assuming the vessel is in the damaged condition, acting upwards
- the weight of the filled tanks assuming the vessel is capsized

b) Athwartships and in the capsized conditions:
- the tank seatings in the athwartship direction are to be designed for the total heeling range up to the completely capsized condition

c) In the fore-and-aft direction:
- the design of the tank seatings in the fore-and-aft direction is to be based on a force equal to 0,30 P

  where:

  P : Weight of tank including contents.

9.3 Calculation of reaction forces in way of tank supports

9.3.1 The reaction forces in way of tank supports are to be obtained from the structural analysis of the tank, considering the loads specified in [9.2].

If the tank supports are not able to react in tension, the final distribution of the reaction forces at the supports may not show any tensile forces.

9.4 Scantlings of independent tank supports and hull structures in way

9.4.1 Scantlings

The net scantlings of plating, ordinary stiffeners and primary supporting members of tank supports and hull structures in way are to be not less than those obtained by applying the criteria in Part B, Chapter 5, taking into account the hull girder loads and the lateral pressure calculated according to Part B, Chapter 3 as well as the reaction forces determined according to [9.3].

10 Expansion tanks

10.1 General

10.1.1 Each tank is to be provided at about mid-length with an expansion tank whose height above tank top is not to be less than 0,5 m.

10.1.2 Scantlings of expansion tank covers are to be specially examined by the Society.

11 Subdivision

11.1 General

11.1.1 Bulkheads adjacent to tanks, cofferdams and hold are to be welded or assembled by means of an equivalent approved process. They are to have no openings.

11.1.2 The bulkhead scantlings are to be determined in compliance with Pt B, Ch 5, Sec 5, [2] and Pt B, Ch 5, Sec 5, [3], taking into account additional requirements stated under [11.2] and [11.3].

11.2 Minimum thickness of bulkhead plating

11.2.1 Minimum plating thickness

The net thickness, in mm, of liquid cargo tank bulkheads is to be not less than the value obtained from the following formula:

$t_1 = 1,36 + 0,011\ L\ (k_0k)^{0,5} + 3,6\ s$

11.3 Minimum net thickness of structural member web

11.3.1 Ordinary stiffeners

The minimum net thickness, in mm, of the web plate of ordinary stiffeners fitted on liquid cargo tank bulkhead is to be obtained from the following formula:

$t = 0,61\ L^{1/3}\ (k_0k)^{0,5} + 3,6\ s$

11.3.2 Primary supporting members

The minimum net thickness, in mm, of the web plate of primary supporting members is to be obtained using the following formula:

$t = 1,14\ L^{1/3}\ (k_0k)^{0,5}$

11.4 Corrugated bulkheads

11.4.1 General

In place of plane bulkheads provided with stiffeners, corrugated bulkheads, designed according to Pt B, Ch 5, Sec 5, [6], may be built in.

11.4.2 Direct calculation

The relevant service and test pressure related to the vessel type are to be considered.

The following checks are to be carried out:

- section modulus of beam
- section modulus of welds
- buckling of face plate
- section modulus of welds when there is no continuity of web in double bottom.

For the allowable stresses, see Pt B, Ch 2, Sec 8, [2].

SECTION 4 CONTAINER VESSELS

Symbols

B : Breadth, in m, defined in Pt B, Ch 1, Sec 2, [2.2]

D : Depth, in m, defined in Pt B, Ch 1, Sec 2, [2.3]

g : Gravitational acceleration:

$g = 9,81\ m/s^2$

k : Material factor defined in:
- Pt B, Ch 2, Sec 3, [2.3] for steel
- Pt B, Ch 2, Sec 3, [3.5] for aluminium alloys

k_0 : Coefficient to be taken equal to:
- k_0= 0 for steel
- k_0= 2,35 for aluminium alloys

L : Rule length, in m, defined in Pt B, Ch 1, Sec 2, [2.1]

n : Navigation coefficient defined in Pt B, Ch 3, Sec 1, [5.2]

R_y : Minimum yield stress, in N/mm², of the material to be taken equal to:
- R_y= 235/k N/mm² for steel
- R_y= 100/k N/mm² for aluminium alloys

unless otherwise specified

T : Scantling draught, in m, defined in Pt B, Ch 1, Sec 2, [2.4]

T_1 : Draught associated with each cargo and ballast distribution, in m, defined in Pt B, Ch 3, Sec 1, [2.4.3]

t : Net thickness, in mm, of plating

β_b , β_S : Span correction coefficients defined in Pt B, Ch 2, Sec 4, [5.2]

γ_R : Partial safety factor covering uncertainties regarding resistance, defined in Pt B, Ch 5, Sec 1, [1.3]

γ_m : Partial safety factor covering uncertainties regarding material, defined in Pt B, Ch 5, Sec 1, [1.3]

λ_b , λ_s : Coefficients for pressure distribution correction defined in Pt B, Ch 2, Sec 4, [6.3].

1 General

1.1 Application

1.1.1 The service notation **Container vessel** is assigned, in accordance with Pt A, Ch 1, Sec 3, [2.1.2], to vessels intended to carry dry unit cargoes.

1.1.2 Vessels dealt with in this Section are to comply with the requirements stated in Part A, Part B and Part C of the Rules, as applicable, and with the requirements of this Section, which are specific to container vessels.

1.2 Documentation to be submitted

1.2.1 In addition to the documentation required in Pt B, Ch 1, Sec 3, the following information is to be submitted to the Society:

- container arrangement in holds, on decks and on hatch covers, indicating size and gross mass of containers
- container lashing arrangement indicating securing and load bearings arrangements
- drawings of load bearing structures and cell guides, indicating the design loads and including the connections to the hull structures and the associated structural reinforcements.

2 Stability

2.1 General

2.1.1 The Society may waive the requirements of this Article, depending on the vessel design and operating conditions.

2.1.2 The general requirements of Pt B, Ch 2, Sec 2 are to be complied with.

2.1.3 In addition, the requirements of [2.2], [2.3] and [2.4] are to be complied with, as applicable, in the following cases:

a) $B < 9,5$ and $n_T > 1$

b) $9,5 \le B < 11$ and $n_T > 2$

c) $B \ge 11$ and:
- ($n_S > 3$ and $n_T > 2$), or
- $n_T > 3$

where:

n_T : Number of container tiers

n_S : Number of container stacks over the breadth B.

2.2 Stowage of containers

2.2.1 Secured containers

A cargo of containers shall be considered to be secured if each individual container is firmly secured to the hull of the vessel by means of rails or turnbuckles and its position cannot alter during the voyage.

2.2.2 In the case of vessels likely to carry either secured or non-secured containers, separate documents concerning stability are required for the carriage of each type of container.

2.3 Intact stability in case of non-secured containers

2.3.1 All methods of calculating a vessel's stability in the case of non-secured containers shall meet the following limit conditions:

a) metacentric height GM shall not be less than 1,00 m

b) under the joint action of the wind thrust, centrifugal force resulting from the vessel's turning and the effect of free surfaces induced by the hold or double bottom fillings, the angle of heel shall not exceed 5° and the edge of the deck shall not be immersed.

2.3.2 The heeling lever, in m, resulting from the centrifugal force caused by the vessel turning shall be determined in accordance with the following formula:

$$h_{KZ} = 0,00308\frac{v^2}{L_{WL}}\left(KG - \frac{T}{2}\right)$$

2.3.3 The heeling lever, in m, resulting from the wind thrust is to be determined in accordance with the following formula:

$$h_{KW} = 0,1\,p_{WD}\frac{A_W}{\Delta}\left(\ell_W + \frac{T}{2}\right)$$

where:

p_{WD} : Wind pressure, in kN/m², defined in Pt B, Ch 3, Sec 4, [2.1.3].

A_W : Side surface above the waterline of the loaded vessel, in m²

ℓ_W : Height, in m, of the centre of gravity of the side surface A_W above the waterline.

2.3.4 The heeling lever, in m, resulting from the free surfaces of rainwater and residual water within the hold or the double bottom shall be determined in accordance with the following formula:

$$h_{KFO} = \frac{0,015}{\Delta}\sum[b\ell(b - 0,55\sqrt{b})]$$

where:

b : Width of hold or section of the hold in question, in m

ℓ : Length of hold or section of the hold in question, in m.

2.3.5 Half of the fuel and fresh water supply shall be taken into account for each load condition.

2.3.6 The stability of a vessel carrying non-secured containers shall be considered to be sufficient if the effective KG does not exceed the KG_Z determined according to [2.3.7].

2.3.7 KG_Z is the maximum permissible height, in m, of the loaded vessel's centre of gravity above its base.

KG_Z shall be calculated for various displacements covering all of the possible draught variations, according to the following formulae:

$$KG_Z = \frac{KM + \frac{B_{WL}}{2F}\left(Z_Z\frac{T_m}{2} - h_{KW} - h_{KFO}\right)}{\frac{B_{WL}}{2F}Z_Z + 1}$$

$KG_Z = KM - 1$

whichever is the lesser,

where:

$B_{WL} / 2F > 11,5$

KM : Height of the metacentre above the base, in m.

If no curve diagram is available the value of KM may be determined, for example, via the following approximation formulae:

- vessels in the form of a pontoon:

$$KM = \frac{B_{WL}^2}{\left(12,5 - \frac{T_m}{D}\right)T_m} + \frac{T_m}{2}$$

- other vessels:

$$KM = \frac{B_{WL}^2}{\left(12,7 - 1,2\frac{T_m}{D}\right)T_m} + \frac{T_m}{2}$$

F : Effective freeboard at 0,5 L_{OA}

B_{WL} : Vessel waterline breadth, in m

T_m : Average draught, in m

Z_Z : Parameter for the centrifugal force resulting from turning:

$$Z_Z = 0,00308\frac{v^2}{L_{WL}}$$

2.4 Intact stability in case of secured containers

2.4.1 In the case of secured containers, all means of calculation used in order to determine vessel stability shall meet the following limit conditions:

- metacentric height GM shall not be less than 0,50 m
- no hull opening shall be immersed by the combined action of the centrifugal force resulting from the turning of the vessel, wind thrust and free surfaces of liquids.

2.4.2 The heeling moments resulting from the wind thrust, centrifugal force due to vessel's turning and free surfaces of liquids, are to be determined in accordance with [2.3].

Half of the supply of fuel and fresh water for each load condition shall be taken into account.

2.4.3 The stability of a vessel carrying secured containers shall be considered to be adequate if the effective KG does not exceed the KG_Z determined according to [2.4.4].

2.4.4 KG_Z is the maximum permissible height, in m, of the loaded vessel's centre of gravity above its base.

KG_Z shall be calculated for various displacements covering all of the possible draught variations, according to the following formulae:

$$KG_Z = \frac{KM - KM_1 + KM_2}{0,75\frac{B_{WL}}{F^*}Z_Z + 1}$$

$KG_Z = KM - 0,5$

whichever is the lesser,

where:

$B_{WL} / F^* \geq 6,6$

KM_1 : Parameter equal to:

$$KM_1 = \frac{I - i}{2\nabla}\left(1 - 1,5\frac{F}{F^*}\right) \geq 0$$

KM_2 : Parameter equal to:

$$KM_2 = 0,75\frac{B_{WL}}{F^*}\left(Z_Z\frac{T_m}{2} - h_{KW} - h_{KFO}\right)$$

with $B_{WL} / F^* \geq 6,6$

F^* : Ideal freeboard, in m:

$F^* = \min(F_1^* ; F_2^*)$

$F_1^* = D^* - T_m$

$$F_2^* = \frac{aB_{WL}}{2b}$$

a : Vertical distance between the lower edge of the opening that is first immersed in the event of heeling and the water line in the vessel's normal position, in m

b : Distance of the same opening as above from the centre of the vessel, in m

D^* : Ideal depth, in m:

$$D^* = D + \frac{q}{0,9L_{OA}B_{WL}}$$

q : Sum of the volumes, in m^3, of the deckhouses, hatchways, trunk decks and other superstructures up to a height of 1,0 m above D or up to the lowest opening in the space under consideration, the lowest value shall be taken.

Parts of spaces located within the area of 0,05 L_{OA} from the extremities of the vessel shall not be taken into account

∇ : Displacement of the vessel at T_m, in m^3

i : Transverse moment of inertia, in m^4, of waterline area parallel to the base, at height, in m:

$h = T_m + 2 F^* / 3$

I : Transverse moment of inertia, in m^4, of waterline area T_m

If there are no hydrostatic curves, the value needed for calculating transverse moment of inertia I of the waterline area may be obtained from the following approximation formulae:

- vessels in the form of a pontoon:

$$I = \frac{\nabla B_{WL}^2}{\left(12,5 - \frac{T_m}{D}\right)T_m}$$

- other vessels:

$$I = \frac{\nabla B_{WL}^2}{\left(12,7 - 1,2\frac{T_m}{D}\right)T_m}$$

T_m : Average draught, in m.

3 Structure arrangements

3.1 Strength principles

3.1.1 Local reinforcements

Local reinforcements of the hull structure are to be provided under container corners and in way of fixed cargo securing devices and cell guides, if fitted.

The forces applying on the fixed cargo securing devices are to be indicated by the designer.

3.2 Bottom structure

3.2.1 Floor and girder spacing

As a recommendation, the floor spacing is to be such that floors are located in way of the container corners. Floors are also to be fitted in way of watertight bulkheads.

Girders are generally to be fitted in way of the container corners.

3.2.2 Strength continuity

Adequate strength continuity of floors and bottom transverses is to be ensured in way of the side tank by means of brackets.

3.2.3 Reinforcements in way of cell guides

The structures of the bottom and inner bottom on which cell guides rest are to be adequately stiffened with doublers, brackets or equivalent reinforcements.

3.3 Fixed cell guides

3.3.1 General

Containers may be secured within fixed cell guides, permanently connected by welding to the hull structure, which prevent horizontal sliding and tipping.

3.3.2 Arrangement of fixed cell guides

Vertical guides generally consist of sections with equal sides, not less than 12 mm in thickness, extended for a height sufficient to give uniform support to containers.

Guides are to be connected to each other and to the supporting structures of the hull by means of cross-ties and longitudinal members such as to prevent deformation due to the action of forces transmitted by containers.

In general, the spacing between cross-ties connecting the guides may not exceed 5 metres, and their position is to coincide as nearly as possible with the one of the container corners (see Fig 1).

Cross-ties are to be longitudinally restrained at one or more points so that their elastic deformation due to the action of the longitudinal thrust of containers does not exceed 20 mm at any point.

In stowing containers within the guides, the maximal clearance between container and guide is not to exceed 25 mm in the transverse direction and 38 mm in the longitudinal direction.

The upper end of the guides is to be fitted with a block to facilitate entry of the containers. Such appliance is to be of robust construction so as to withstand impact and chafing.

Figure 1 : Typical structure of cell guides

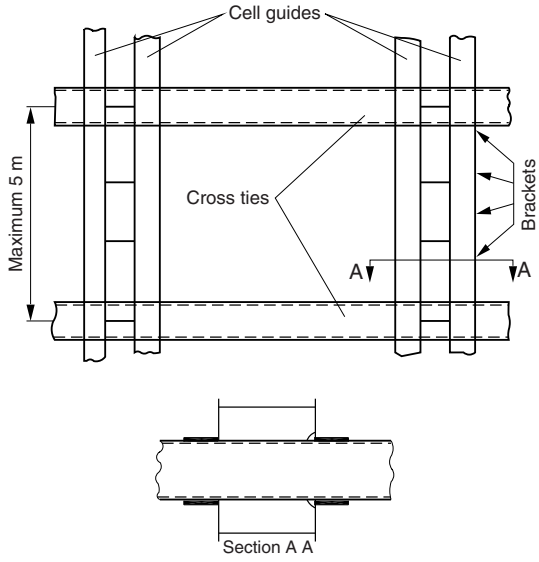

3.4 Fixed cargo securing devices

3.4.1 Where containers are carried, in particular on the hatch covers and on deck, container supporting members of adequate scantlings are to be fitted.

3.5 Hatch covers carrying containers

3.5.1 Efficient retaining arrangements are to be provided to prevent translation of the hatch cover under the action of the longitudinal and transverse forces exerted by the stacks of containers on the cover. These retaining arrangements are to be located in way of the hatch coaming side brackets.

Solid fittings are to be welded on the hatch cover where the corners of the containers are resting. These parts are intended to transmit the loads of the container stacks onto the hatch cover on which they are resting and also to prevent horizontal translation of the stacks by means of special intermediate parts arranged between the supports of the corners and the container corners.

4 Single side vessels

4.1 Protection of cargo holds

4.1.1 Coating

All metallic structures are to be protected against corrosion according to Pt B, Ch 8, Sec 1.

4.2 Bottom structure

4.2.1 Single bottom vessels are to be fitted with girders in compliance with Pt B, Ch 5, Sec 2, [4.2] or Pt B, Ch 5, Sec 2, [5.3].

4.2.2 Transversely framed single bottom

A single bottom transversely framed is to be fitted with floors at every frame.

4.2.3 Longitudinally framed single bottom

Longitudinal stiffeners are generally to be continuous when crossing primary members.

The section modulus of longitudinals located in way of the web frames of transverse bulkheads is to be increased by 10%.

Longitudinals are to be supported by transverses whose spacing is to be not greater than 8-frame spacing, nor than 4 m, whichever is less.

4.3 Transversely framed side

4.3.1 Connection of frames with floors

The frames are to be connected to the floors in compliance with Pt B, Ch 5, Sec 3, [4.1].

4.3.2 Connection with deck structure

At the upper end of frames, connecting brackets are to be provided, in compliance with Pt B, Ch 5, Sec 3, [8]. Such brackets are to extend to the hatch coaming.

4.3.3 Web frames

Web frames are to be fitted with a spacing not exceeding 5 m.

Their scantling is to be performed according to [7.3.1].

4.3.4 Connection of frames to bottom longitudinals

In the case of a longitudinally framed single bottom, the side frames are to be connected to the bottom longitudinal the most at side, either directly or by means of a bracket.

Similarly, at the frame upper part, connecting brackets are to be provided, extending up to the deck longitudinal the most at side and, even, to:

- the hatch coaming, in general
- the side trunk bulkhead, in case of a trunk vessel.

4.4 Longitudinally framed side

4.4.1 Side transverses

Side transverses are to be fitted, in general, with a spacing not greater than 8-frame spacing, nor than 4 m.

Their scantling is to be performed according to [7.3.1].

The side transverses are generally directly welded to the shell plating.

In the case of a double bottom, the side transverses are to be bracketed to the bottom transverses.

4.4.2 Side longitudinals

Longitudinal ordinary stiffeners are generally to be continuous when crossing primary supporting members.

In the case the longitudinals are interrupted by a primary supporting member, brackets on both sides of the primary supporting member are to be fitted in perfect alignment.

4.5 Topside structure

4.5.1 Strength continuity

At the ends of the cargo hold space, the members taking part in the hull girder strength are to be correctly staggered.

Arrangements are to be made to ensure strength continuity of the topside structure at the end of the hatchways. As far as practicable, it is recommended to extend the part of the hatch coaming which is located above deck and to connect it to the side bulkheads of the accommodation spaces.

5 Double hull vessels

5.1 Protection of cargo holds

5.1.1 All metallic structures are to be protected against corrosion according to Pt B, Ch 8, Sec 1.

5.2 Welding

5.2.1 General

Welding is to comply with the requirements of Pt B, Ch 8, Sec 2.

5.2.2 Arrangements applying to the shell plating and the double hull

Transverse butts are to be butt welded. Double bottom butts may be welded in way of floor faceplate which then acts as a support.

The longitudinal joints are to be obtained either by butt welding or by overlap welding. In the second case, the outer line welding is to be continuous with a throat thickness of 0,5 t, whereas the inner line of welding may be discontinuous with a ratio p/d < 4 and a throat thickness of 0,5 t; however, for spaces which are not accessible after construction, the inner weld is to be carried out with a continuous line welding.

5.2.3 Arrangements applying to the topside plating

Butt weldings are to be carried out on the transverse butts of the sheerstrake, stringer plate and coaming.

5.2.4 Connection of inner bottom with floors

Where the floors cannot be welded to the inner bottom by means of fillet welds, the connection may be obtained by slot welds, in compliance with Pt B, Ch 8, Sec 2, [2.7]. In that case, the floors are to be fitted with flange of adequate width.

5.3 Transversely framed double side

5.3.1 Structural arrangement

Where the inner side does not extend down to the outer bottom, it is to be held in position by means of brackets or vertical stiffeners fitted to the floors.

Adequate continuity strength is to be ensured in way of changes in width of the double side. In particular, scarfing of the inner side is to be ensured beyond the cargo hold region.

5.3.2 Side and inner side frames

At their upper end, side and inner side frames are to be connected by means of a bracket. This bracket can be a section or a flanged plate with a section modulus at least equal to the one of the side web frames.

Where the outer and inner side frames are connected by means of struts located at mid-span, their section modulus may be reduced by 30%.

The strut sectional area is to be not less than those of the connected frames.

At their lower end, the frames are to be adequately connected to the floors or top tank.

5.3.3 Side and inner side web frames

It is recommended to provide side web frames, fitted every 3 m and, in general, not more than 6-frame spacings apart.

At their upper end, side and inner side web frames are to be connected by means of a bracket. This bracket can be a section or a flanged plate with a section modulus at least equal to the one of the side web frames. An attached plating strip, where applicable, may be taken into account.

The web frames are to be connected at their mid-span by means of struts, the cross sectional area of which is not to be less than those of the connected web frames.

At their lower end, the web frames are to be adequately connected to the floors or top tank.

5.3.4 Plate webs

Plate webs may be fitted in addition or instead of web frames.

Plate webs are to be fitted with horizontal stiffeners, the spacing of which is not to be greater than 1 m.

The scantling of plate webs with large openings is to be examined by the Society on a case by case basis.

5.4 Longitudinally framed double side

5.4.1 Inner side plating

The requirements of [5.3.1] also apply to longitudinally framed double side, with the transverses instead of web frames.

5.4.2 Side and inner side longitudinals

Where the outer and inner side longitudinals are connected by means of struts located at mid-span, their section modulus may be reduced by 30%.

The strut sectional area is to be not less than those of the connected longitudinals.

5.4.3 Side transverses

The requirements of [5.3.3] also apply to longitudinally framed double side, with the transverses instead of web frames.

5.4.4 Plate webs

The requirements of [5.3.4] also apply to longitudinally framed double side.

5.5 End structure

5.5.1 Arrangements for self-propelled vessels

At the ends of the cargo hold space, the strength continuity of members taking part in the hull girder strength is to be adequately ensured.

In particular, arrangements are to be made to ensure strength continuity of the top structure at the end of the hatchways. As far as practicable, it is recommended to extend the part of the hatch coaming located above deck and to connect it to the side bulkheads of the accommodation spaces.

The longitudinal boundaries of the engine room side bunkers are to be located, as far as practicable, in the extension of the double hull sides.

5.5.2 Arrangements for pushed vessels

Where the compartments outside the cargo hold space are of small size, the strength continuity is to be ensured by scarfing of strength members.

The double hull sides are to be extended, in the shape of brackets, outside the cargo hold space over a distance equal to twice the stringer plate width.

Strength continuity of the inner bottom is to be ensured by means of brackets, one of which is to be along the vessel's centreline. Where the vessel ends are built on the longitudinal system, the brackets are to be connected to the bottom longitudinals; otherwise, they are to be connected to keelsons.

Pushing transoms, if any, are to be designed in compliance with Pt B, Ch 7, Sec 6, [2.2].

6 Design loads

6.1 Design torsional torque

6.1.1 Where no specific data are provided by the Designer, the design still water torsional torque induced by the non-uniform distribution of cargo, consumable liquids and ballast is to be obtained at the midship section, in kN.m, from the following formula:

$M_T = 31{,}4\ F_T\ n_S\ n_T\ B$

where:

F_T : Distribution factor defined in Tab 1 as a function of the x co-ordinate of the hull transverse section with respect to the reference co-ordinate system defined in Pt B, Ch 1, Sec 2, [3]

n_S : Number of container stacks over the breadth B

n_T : Number of container tiers in cargo hold amidships (including containers on hatch covers).

Table 1 : Distribution factor F_T

Hull transverse section location	Distribution factor F_T
$0 \le x < 0{,}5\ L$	x / L
$0{,}5\ L \le x \le L$	$(1 - x / L)$

6.2 Forces on containers

6.2.1 Still water and inertial forces

The force F_i applied to one container located at the level "i", as defined in Fig 2, is to be determined in compliance with Pt B, Ch 3, Sec 4, [3.4].

The mass of the containers is to be defined by the Designer.

Where the mass of loaded containers is not known, the following values may be used:

- for 40-feet containers: $m_i = 27$ t
- for 20-feet containers: $m_i = 17$ t

Where empty containers are stowed at the top of a stack, the following values may be used:

- 0,14 times the weight of a loaded container, in case of empty steel containers
- 0,08 times the weight of a loaded container, in case of empty aluminium containers.

Figure 2 : Containers level in a stack

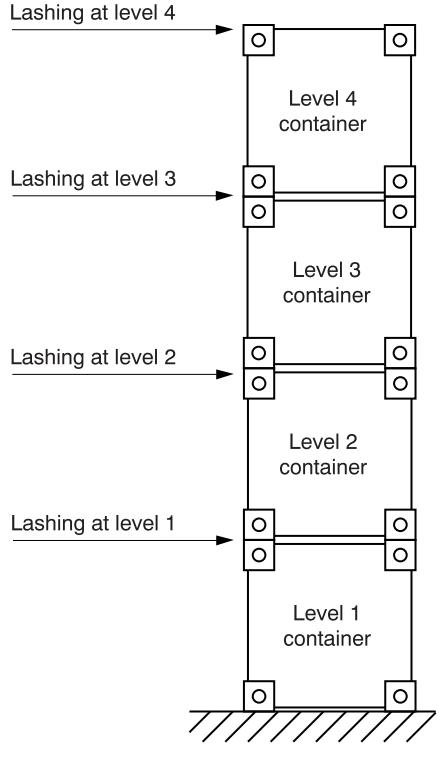

6.2.2 Wind forces applied to one container

The forces due to the effect of the wind, applied to one container stowed above deck at level i, are to be obtained, in kN, from the following formulae:

- in x direction:

  $F_{X,\,WD,\,i} = p_{WD}\ h_C\ b_C$

- in y direction:

  $F_{Y,\,WD,\,i} = p_{WD}\ h_C\ \ell_C$

where:

h_C : Height, in m, of a container

ℓ_C, b_C : Dimensions, in m, of the container stack in the vessel longitudinal and transverse directions, respectively

p_{WD} : Wind pressure, in kN/m², defined in Pt B, Ch 3, Sec 4, [2.1.3].

These forces are only acting on the stack exposed to wind.

In the case of M juxtaposed and connected stacks of the same height, the wind forces are to be distributed over the M stacks.

In the case of juxtaposed and connected stacks of different heights, the wind forces are to be distributed taking into account the number of stacks at the level considered (see example in Fig 3).

Figure 3 : Distribution of wind forces in the case of stacks of different heights

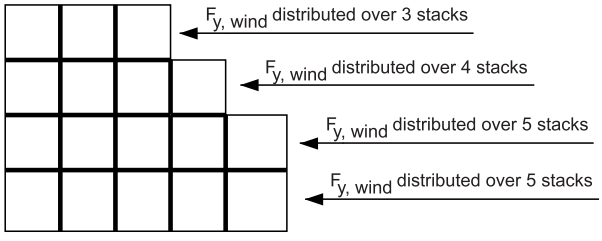

6.2.3 Stacks of containers

The still water, inertial and wind forces to be considered as being applied at the centre of gravity of the stack, and those transmitted at the corners of such stack is to be obtained, in kN, as specified in Tab 2.

6.2.4 Securing load

The scantling load of securing devices is to be determined assuming an angle of list of 12°.

7 Hull scantlings

7.1 General

7.1.1 In general, the hull scantlings and arrangements are to be in compliance with Part B, Chapter 5.

7.1.2 Scantlings of structural members subjected to concentrated loads are to be determined by direct calculation according to Pt B, Ch 2, Sec 8, [2]. In particular, the requirements of [8] are to be complied with.

7.1.3 Where the operating conditions (loading/unloading sequence as well as consumable and ballast distribution) are likely to induce excessive torsional torque, the torsional strength is to be checked, using the design torsional torque derived from [6.1.1].

7.2 Container seating

7.2.1 The hull girder normal stress σ_{X1} to be considered for the strength check of container seating plating is to be determined according to Pt B, Ch 5, Sec 1, [2.3].

For vessels assigned the range of navigation **IN(1,2 < x ≤ 2)**, see Ch 2, Sec 12, [4.2].

7.2.2 The net thickness, in mm, of container seating, if fitted, is to be not less than the thickness of the adjacent inner bottom plating nor than the thickness obtained from the following formula:

$$t_{CS} = 0,8 C_{CS} \sqrt{\frac{k n_C R}{\lambda}}$$

where:

R : Force, in kN, transmitted at the corner of each stack of containers, to be determined according to Tab 2

λ : Coefficient taken equal to:

- in general:
  - for longitudinally framed plating:

$$\lambda_L = \sqrt{1 - 0,95\left(\gamma_m \frac{\sigma_{x1}}{R_y}\right)^2} - 0,225\gamma_m \frac{\sigma_{x1}}{R_y}$$

  - for transversely framed plating:

$$\lambda_T = 1 - 0,89\gamma_m \frac{\sigma_{x1}}{R_y}$$

- where alternative method developed in Pt B, Ch 5, Sec 6 is followed for L < 40 m:
  - for longitudinally framed plating:

$$\lambda_L = \sqrt{1 - 0,95\left(\gamma_m \frac{\sigma_{for}}{R_y}\right)^2} - 0,225\gamma_m \frac{\sigma_{for}}{R_y}$$

  - for transversely framed plating:

$$\lambda_T = 1 - 0,89\gamma_m \frac{\sigma_{for}}{R_y}$$

where:

σ_{for} : Parameter, in N/mm², taken equal to

- σ_{for} = 100 N/mm² for steel
- σ_{for} = 45 N/mm² for aluminium alloys

n_C : Number of stacks of container corners on the seating

C_{CS} : Coefficient to be taken equal to:

$$C_{CS} = 2,15 - \frac{0,05\ell}{s} + 0,02\left(4 - \frac{\ell}{s}\right)\alpha^{0,5} - 1,75\alpha^{0,25}$$

where ℓ/s is to be taken not greater than 3

$$\alpha = \frac{n_C A_C}{\ell s}$$

A_C : Area of a stack of container corner, in m²

In the case of several container corners on the same plate panel, A_C is the area corresponding to the group of corners

ℓ = max (a ; b)

s = min (a ; b)

a, b : Spacings, in m, of the container supporting members.

7.3 Additional requirements for single side vessels

7.3.1 Transverse rings

Where necessary, transverse rings are to be fitted to provide additional supports of the stringer plate.

The ring component scantlings are not to be less than required in Tab 3.

Table 2 : Containers - Still water, inertial and wind forces

Vessel condition	Still water force F_S, in kN, and inertial and wind force F_W, in kN, acting on each container stack	Vertical still water force R_S, in kN, and inertial and wind force R_W, in kN, transmitted at the corners of each container stack
Still water condition	$F_S = \sum_{i=1}^{N} F_{S,i}$	$R_S = \frac{F_S}{4}$
Upright condition (see Fig 4)	• in x direction: $F_{W,X} = \sum_{i=1}^{N} (F_{W,X,i} + F_{X,WD,i})$	$R_{W,1} = \frac{F_{W,Z}}{4} + \frac{N_C h_C F_{W,X}}{4\ell_C}$
	• in z direction: $F_{W,Z} = \sum_{i=1}^{N} F_{W,Z,i}$	$R_{W,2} = \frac{F_{W,Z}}{4} - \frac{N_C h_C F_{W,X}}{4\ell_C}$
Inclined condition (negative roll angle) (see Fig 5)	• in y direction: $F_{W,Y} = \sum_{i=1}^{N} (F_{W,Y,i} + F_{Y,WD,i})$	$R_{W,1} = \frac{F_{W,Z}}{4} + \frac{N_C h_C F_{W,Y}}{4 b_C}$
	• in z direction: $F_{W,Z} = \sum_{i=1}^{N} F_{W,Z,i}$	$R_{W,2} = \frac{F_{W,Z}}{4} - \frac{N_C h_C F_{W,Y}}{4 b_C}$

Note 1:
N_C : Number of containers per stack
h_C : Height, in m, of a container
ℓ_C, b_C : Dimensions, in m, of the container stack in the vessel longitudinal and transverse directions, respectively.

Figure 4 : Inertial and wind forces Upright vessel condition

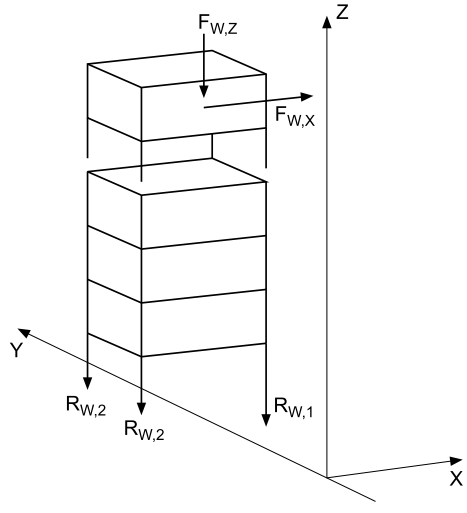

Figure 5 : Inertial and wind forces Inclined vessel condition

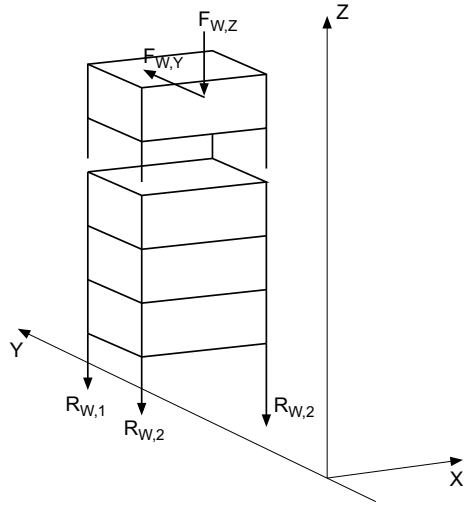

7.3.2 Transverse hold bulkhead structure

The number and location of transverse bulkheads are defined in Pt B, Ch 5, Sec 5.

Where necessary, additional bulkheads are to be fitted to provide for sufficient transverse strength of the vessel.

The scantlings of transverse hold bulkheads are to be not less than the values required in Pt B, Ch 5, Sec 5.

a) Vertically framed plate bulkhead

The upper end of the vertical stiffeners is to be connected either to a strong deck box beam or to a stringer located at the stringer plate level or above.

As far as practicable, the bottom of the box beam or the bulkhead end stringer is to be located in the same plane as the stringer plate.

Where this is not the case, the bulkhead plating or the box beam sides are to be fitted with an efficient horizontal framing at that level.

b) Horizontally framed bulkhead

The upper part of horizontally framed bulkheads are to be specially considered by the Society.

c) Plate bulkhead end stringer

The net scantlings of the plate bulkhead end stringer is to be determined, using the formula:

$$w = \beta_b \frac{p}{m(226/k - \sigma_A)} S \ell^2 10^3$$

Table 3 : Net scantling of transverse rings

Primary supporting member		w (cm³)	A_{Sh} (cm²)
Reinforced floors Bottom transverses		$w = \frac{\gamma_R \gamma_m \beta_b p}{m R_y} S B^2 10^3$	$A_{sh} = 10 \gamma_R \gamma_m \beta_s \frac{p}{R_y} S B$
Side webs and side transverses **(1)**	• if $\ell_0 \le \ell$ • if $\ell_0 > \ell$	$w = 26 \frac{\gamma_R \gamma_m \beta_b \ell}{m R_y} S \ell_0^2 10^3$ $w = 4,4 \frac{\gamma_R \gamma_m \lambda_b \beta_b p}{m R_y} S \ell^2 10^3$	$A_{sh} = 68 \gamma_R \gamma_m \beta_S \frac{\ell}{R_y} S \ell_0$ $A_{sh} = 10 \gamma_R \gamma_m \lambda_S \beta_s \frac{p}{R_y} S \ell$
Strong box beams		see Pt B, Ch 5, Sec 4, [2.4.4]	

(1) Scantlings of web frames and side transverses at the lower end are to be the same as those of floors or bottom transverses connected to them.

Note 1:

p : Design load, in kN/m², defined in Pt B, Ch 3, Sec 4

ℓ_0 : Span parameter, in m: $\ell_0 = p_d / g$

p_d : Total pressure, in kN/m², at the lower end of the stiffener

m : Boundary coefficient, to be taken equal to 8.

where:

p : Bulkhead end stringer design load, in kN/m², to be determined according to Pt B, Ch 2, Sec 5, [3.1]

S : Bulkhead stringer spacing, in m

m : Boundary coefficient to be taken equal to 8

σ_A : Bulkhead end stringer axial stress, in N/mm²:

$$\sigma_A = \frac{10 q D_1}{A}$$

q : Distributed transverse load acting on the stringer plate, in kN/m, to be determined as stated in Pt B, Ch 5, Sec 4, [2.4.1]

D_1 : Unsupported stringer plate length, in m, defined in Pt B, Ch 5, Sec 4, [2.4.2]

In way of hold end bulkheads, D_1 is to be substituted by 0,5 D_1

A : Bulkhead end stringer sectional area, in cm².

7.4 Additional requirements for double hull vessels

7.4.1 Double bottom arrangement

Where the inner side plating does not extend down to the bottom plating, the floors of vessels built in the transverse system are to be stiffened, at each frame, in way of the inner side plating, by means of a section, the net sectional area of which, in cm², is not to be less than:

$A = 0,01\ b\ t_F$

where:

t_F : Net thickness of floor web, in mm

b : Section height, in mm: $b = 100\ H_D$

H_D : Double bottom height, in m.

As a rule, manholes are not to be provided into the centreline girder.

8 Direct calculation

8.1 General

8.1.1 The following requirements apply for the grillage analysis of primary supporting members subjected to concentrated loads.

Direct calculation is to be carried out in compliance with Pt B, Ch 2, Sec 8, [2].

8.2 Loading conditions and load cases in service conditions

8.2.1 Bottom and side structures

The loads are to be calculated for the most severe loading conditions, with a view to maximising the stresses in the primary supporting members.

The following loading conditions are generally to be considered:

a) Harbour
- full cargo load in hold/vessel at the relevant draught T_1
- empty hold/vessel at the relevant draught T_1

b) Navigation
- full cargo load/vessel at the scantling draught T
- lightship/vessel at the relevant draught T_1.

8.2.2 Deck structure

Where containers are intended to be loaded on the deck, the analysis of the deck structure is to be carried out taking into account a full container load, considering the navigation case.

8.3 Structure checks

8.3.1 The following checks are to be carried out:

- level of bending stresses and shear stresses, in particular in way of holes and passage of longitudinals
- buckling strength of unstiffened webs
- continuity of double bottom in the side tanks, for bottom structure.

SECTION 5 RoRo Cargo Vessels

Symbols

A_{sh} : Net web shear sectional area, in cm²

B : Breadth, in m, defined in Pt B, Ch 1, Sec 2, [2.2]

D : Depth, in m, defined in Pt B, Ch 1, Sec 2, [2.3]

F : Wheeled force, in kN, defined in Pt B, Ch 3, Sec 4, [3.5]

g : Gravitational acceleration:

$g = 9,81\ m/s^2$

I_Y : Net moment of inertia, in cm⁴, of the hull transverse section around its horizontal neutral axis, to be calculated according to Pt B, Ch 4, Sec 1

K_S, K_T : Coefficients taking into account the number of axles considered as acting on the stiffener, defined in Tab 2

k : Material factor defined in:

- Pt B, Ch 2, Sec 3, [2.3] for steel
- Pt B, Ch 2, Sec 3, [3.5] for aluminium alloys

k_0 : Coefficient to be taken equal to:

- k_0= 1 for steel
- k_0= 2,35 for aluminium alloys

L : Rule length, in m, defined in Pt B, Ch 1, Sec 2, [2.1]

R_y : Minimum yield stress, in N/mm², of the material to be taken equal to:

- R_y= 235/k N/mm² for steel
- R_y= 100/k N/mm² for aluminium alloys

unless otherwise specified

S : Spacing, in m, of primary supporting members

s : Spacing, in m, of ordinary stiffeners

T : Scantling draught, in m, defined in Pt B, Ch 1, Sec 2, [2.4]

T_1 : Draught associated with each cargo and ballast distribution, in m, defined in Pt B, Ch 3, Sec 1, [2.4.3]

t : Net thickness, in mm, of plating

w : Net section modulus, in cm³, of ordinary stiffeners or primary supporting members

α_W : Coefficient taking into account the number of wheels and wheels per axle considered as acting on the stiffener, defined in Tab 1

β_b, β_S : Span correction coefficients defined in Pt B, Ch 2, Sec 4, [5.2]

γ_R : Partial safety factor covering uncertainties regarding resistance, defined in Pt B, Ch 5, Sec 1, [1.3]

γ_m : Partial safety factor covering uncertainties regarding material, defined in Pt B, Ch 5, Sec 1, [1.3]

λ_b, λ_s : Coefficients for pressure distribution correction defined in Pt B, Ch 2, Sec 4, [6.3]

ℓ : Span, in m, of ordinary stiffeners or primary supporting members.

1 General

1.1 Application

1.1.1 The service notation **RoRo cargo vessel** is assigned, in accordance with Pt A, Ch 1, Sec 3, [2.1.4], to vessels intended to carry wheeled vehicles.

1.1.2 Vessels dealt with in this Section are to comply with the requirements stated in Part A, Part B and Part C of the Rules, as applicable, and with the requirements of this Section, which are specific to RoRo cargo vessels.

1.2 Documentation to be submitted

1.2.1 In addition to the documentation required in Pt B, Ch 1, Sec 3, the following information is to be submitted:

a) Plans of ramps, elevators for cargo handling and movable decks, if any, including:
   - structural arrangements of ramps, elevators and movable decks with their masses
   - arrangements of securing and locking devices
   - connection of ramps, lifting and/or hoisting appliances to the hull structures, with indication of design loads (amplitude and direction)
   - wire ropes and hoisting devices in working and stowed position
   - hydraulic jacks
   - loose gear (blocks, shackles, etc.) indicating the safe working loads and the testing loads
   - test conditions

b) Plan of arrangement of motor vehicles, railway cars and/or other types of vehicles which are intended to be carried and indicating securing and load bearing arrangements

c) Characteristics of motor vehicles, railways cars and/or other types of vehicles which are intended to be carried: (as applicable) axle load, axle spacing, number of wheels per axle, wheel spacing, size of tyre print

d) Plan of dangerous areas, in the case of vessels intended for the carriage of motor vehicles with petrol in their tanks.

Table 1 : Wheeled loads - Coefficient α_W

	Single wheel	Double wheels	Triple wheels
Configuration	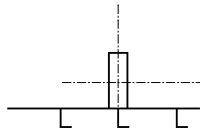	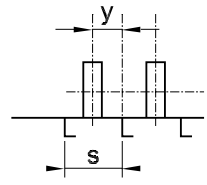	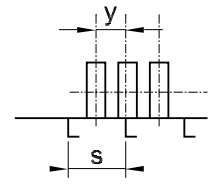
α_W	1,00	$2\left(1-\frac{y}{s}\right)$	$3-2\frac{y}{s}$
Note 1: y is defined as the distance, in m, from the external wheel of a group of wheels to the stiffener under consideration, to be taken equal to the distance from the external wheel to the centre of the group of wheels.			

Table 2 : Wheeled loads - Coefficients K_S and K_T

Coefficients	Single axle	Double axle
K_S	1,00	• if $d \le \ell/\sqrt{3}$ $\frac{172}{81}-\frac{4d}{3\ell}-\frac{d^2}{\ell^2}+\frac{d^4}{\ell^4}$ • if $d > \ell/\sqrt{3}$ $\frac{4}{3}-\frac{4d}{3\ell}+3\frac{d^2}{\ell^2}-\frac{8d^3}{3\ell^3}$
K_T	1,00	$2-\frac{d}{2\ell}-\frac{3d^2}{2\ell^2}+\frac{d^3}{\ell^3}$
Note 1: d : Distance, in m, between two axles (see Fig 1).		

Figure 1 : Wheeled load on stiffeners - Double axles

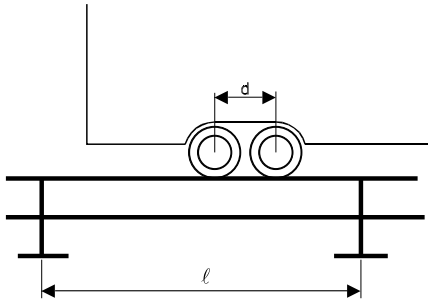

1.3 Direct calculation

1.3.1 The following requirements apply for the analysis of primary supporting members.

Direct calculation is to be carried out in compliance with Pt B, Ch 2, Sec 8, [2].

1.3.2 Loading conditions and load cases in service conditions

The loads are to be calculated for the most severe loading conditions, with a view to maximising the stresses in the primary supporting members.

The following loading conditions are generally to be considered:

a) Harbour
- full cargo load in hold/vessel at the relevant draught T_1
- empty hold/vessel at the relevant draught T_1

b) Navigation
- full cargo load/vessel at the scantling draught T
- lightship/vessel at the relevant draught T_1.

1.3.3 Structure checks

The following checks are to be carried out:

- level of normal stresses and shear stresses, in particular in way of holes and passage of longitudinals
- buckling strength of unstiffened webs
- for double hull vessels, continuity of double bottom in the side tanks.

2 Stability

2.1 General

2.1.1 The Society may waive the requirements of this Article depending on the vessel design and operating conditions.

2.1.2 The general requirements of Pt B, Ch 2, Sec 2, [1] to Pt B, Ch 2, Sec 2, [3] are to be complied with.

2.2 Intact stability

2.2.1 The stability of RoRo cargo vessels for all intended loading conditions is to comply with Pt B, Ch 2, Sec 2, [4].

3 Vessel arrangements

3.1 Sheathing

3.1.1 Wood sheathing is recommended for caterpillar trucks and unusual vehicles.

It is recommended that a piece of wood of suitable thickness should be provided under each crutch in order to distribute the mass over the plate and the nearest stiffeners.

3.2 Drainage of cargo spaces, other than RoRo spaces, intended for the carriage of motor vehicles with fuel in their tanks for their own propulsion

3.2.1 Scupper draining

Scuppers from cargo spaces, other than RoRo spaces, intended for the carriage of motor vehicles with fuel in their tanks for their own propulsion are not to be led to machinery or other places where sources of ignition may be present.

3.3 Hull structure

3.3.1 Framing

In general, the strength deck and the bottom are to be longitudinally framed.

4 Hull scantlings

4.1 General

4.1.1 The hull scantlings and arrangements are to be in compliance with Part B, Chapter 5.

4.1.2 In addition, scantlings of plating and structural members subjected to wheeled loads are to be in compliance with [4.3] to [4.5].

4.2 Hull girder normal stresses

4.2.1 The hull girder normal stress σ_{X1} to be considered for the strength check of structural members subjected to wheeled loads is to be determined according to Pt B, Ch 5, Sec 1, [2.3].

For vessels assigned the range of navigation IN(1,2<x<= 2), see Ch 2, Sec 12, [4.2].

4.3 Plating

4.3.1 Single wheel or group of wheels

The net thickness of plate panels subjected to wheeled loads is to be not less than the value obtained, in mm, from the following formula:

$$t = 0,8 C_{WL} \sqrt{\frac{k_0 k n_p F}{\lambda}}$$

where:

C_{WL} : Coefficient to be taken equal to:

$$C_{WL} = 2,15 - 0,05\frac{\ell}{s} + 0,02\left(4 - \frac{\ell}{s}\right)\alpha^{0,5} - 1,75\alpha^{0,25}$$

where ℓ/s is to be taken not greater than 3

$$\alpha = \frac{A_T}{\ell s}$$

A_T : Tyre print area, in m². In the case of double or triple wheels, A^T is the print area of the group of wheels. A_T is not to be taken greater than the value given in [4.3.2]

ℓ, s : Lengths, in m, of, respectively, the longer and the shorter sides of the plate panel

n_p : Number of wheels on the plate panel, taken equal to:

- 1 in the case of a single wheel
- the number of wheels in a group of wheels in the case of double or triple wheels

λ : Coefficient taken equal to:

- in general:
  - for longitudinally framed plating:

$$\lambda_L = \sqrt{1 - 0,95\left(\gamma_m \frac{\sigma_{x1}}{R_y}\right)^2} - 0,225\gamma_m \frac{\sigma_{x1}}{R_y}$$

  - for transversely framed plating:

$$\lambda_T = 1 - 0,89\gamma_m \frac{\sigma_{x1}}{R_y}$$

- where alternative method developed in Pt B, Ch 5, Sec 6 is followed for L < 40 m:
  - for longitudinally framed plating:

$$\lambda_L = \sqrt{1 - 0,95\left(\gamma_m \frac{\sigma_{for}}{R_y}\right)^2} - 0,225\gamma_m \frac{\sigma_{for}}{R_y}$$

  - for transversely framed plating:

$$\lambda_T = 1 - 0,89\gamma_m \frac{\sigma_{for}}{R_y}$$

where:

σ_{for} : Parameter, in N/mm², taken equal to

- σ_{for} = 100 N/mm² for steel
- σ_{for} = 45 N/mm² for aluminium alloys

4.3.2 Tyre print area

When the tyre print area is not known, it may be taken equal to:

$$A_T = 9,81 \frac{n_p Q_A}{n_W p_T}$$

where:

n_p : Number of wheels on the plate panel, defined in [4.3.1]

Q_A : Axle load, in t

n_W : Number of wheels for the axle considered

p_T : Tyre pressure, in kN/m². When the tyre pressure is not indicated by the designer, it may be taken as defined in Tab 3.

Table 3 : Type pressures p_T for vehicles

Vehicle type	Tyre pressure p_T, in kN/m²	
	Pneumatic tyres	Solid rubber tyres
Private cars	250	Not applicable
Vans	600	Not applicable
Trucks and trailers	800	Not applicable
Handling machines	1100	1600

4.3.3 Wheels spread along the panel length

In the case where two to four wheels of the same properties (load and tyre print area) are spread along the plate panel length as shown in Fig 2, the net thickness of deck plating is to be not less than the value obtained, in mm, from the following formulae:

$$t = t_1 \sqrt{1 + \sum_{i=2}^{n_p} \beta_i}$$

where:

n_p : Number of wheels on the plate panel, to be taken not less than 2

t_1 : Net thickness obtained, in mm, from [4.3.1] for $n_P = 1$, considering one wheel located on the plate panel

β_i : Coefficients obtained from the following formula, replacing i respectively by 2, 3 and 4 (see Fig 2):

- for $\alpha_i < 2$:

  $\beta_i = 0{,}8\,(1{,}2 - 2{,}02\,\alpha_i + 1{,}17\,\alpha_i^2 - 0{,}23\,\alpha_i^3)$

- for $\alpha_i \geq 2$:

  $\beta_i = 0$

with:

$$\alpha_i = \frac{x_i}{s}$$

x_i : Distance, in m, from the wheel considered to the reference wheel (see Fig 2)

4.3.4 Wheels spread along the panel breadth

In the case where two wheels of the same properties (load and tyre print area) are spread along the plate panel breadth as shown in Fig 3, the net thickness of deck plating is to be not less than the value obtained, in mm, from the following formula:

$$t = t_2 \sqrt{\delta}$$

where:

t_2 : Net thickness obtained, in mm, from [4.3.1] for $n_P = 2$, considering one group of two wheels located on the plate panel

δ : Coefficient obtained from the following formula:

$$\delta = \frac{\delta_1 + \delta_2}{2}$$

$$\delta_1 = 1 - \frac{w_s}{s - v}$$

$$\delta_2 = 1 - \frac{3w_s^2 + 6w_s v}{3s^2 - 4v^2}$$

w_s : Distance between the two wheels, as shown in Fig 3

v : Individual wheel breadth, as shown in Fig 3.

When this two-wheel arrangement is repeated several times over the panel length (2, 3 or 4 times), the required net thickness calculated in [4.3.4] is to be multiplied by:

$$\sqrt{1 + \sum_{i=2}^{n_p} \beta_i}$$

as calculated in [4.3.3], where n_p is the number of two wheels groups.

4.3.5 Wheels larger than plate panel

In the particular case of wheels or group of wheel where u > s, the tyre print outside of the plate panel is to be disregarded. The load and the area to be considered are to be adjusted accordingly (see Fig 4).

Figure 2 : Wheels spread along the panel length

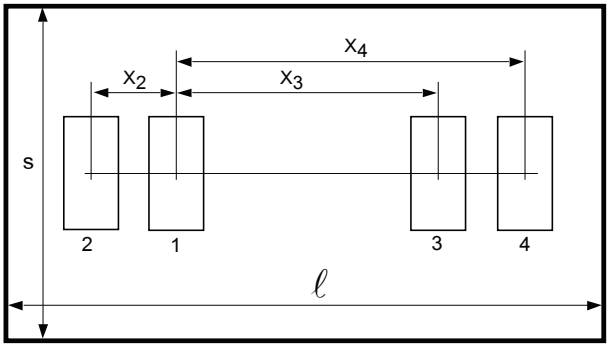

Figure 3 : Wheels spread along the panel breadth

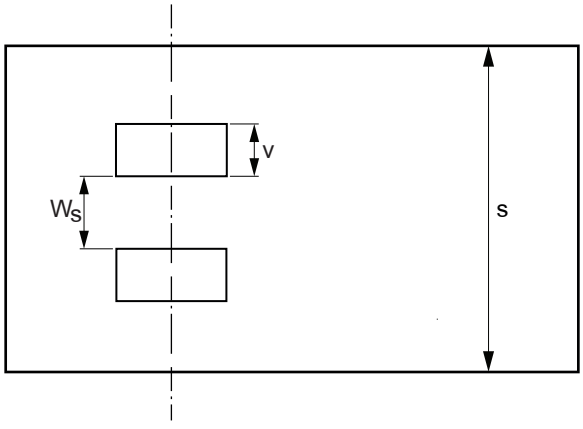

Figure 4 : Tyre print with u > s

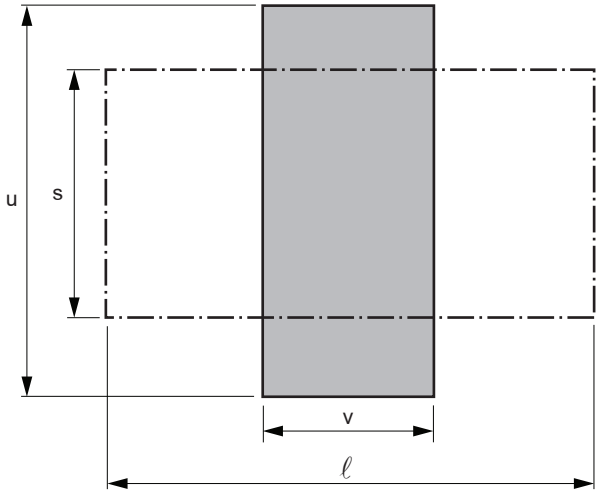

4.4 Ordinary stiffeners subjected to wheeled loads

4.4.1 Net section modulus

The net section modulus w, cm³ of ordinary stiffeners subjected to wheeled loads are to be obtained from the following formulae:

- in general:

$$w = \alpha_W K_S \frac{\gamma_R \gamma_m F}{m(R_y - \gamma_R \gamma_m \sigma_{X1})} \ell 10^3$$

- where alternative method developed in Pt B, Ch 5, Sec 6 is followed for L < 40 m:

$$w = \alpha_W K_S \frac{\gamma_R \gamma_m F}{m R_y (1 - 0,18 \gamma_R \gamma_m K_{MZ})} \ell 10^3$$

where:

m : Boundary coefficient to be taken equal to 6

K_{MZ} : Coefficient defined in Pt B, Ch 5, Sec 6.

4.4.2 Net shear sectional area

The net shear sectional area A_{Sh}, in cm², of ordinary stiffeners subjected to wheeled loads are to be obtained from following formula:

$$A_{sh} = 20 \gamma_R \gamma_m \frac{\alpha_W K_T F}{R_y}$$

4.5 Primary supporting members

4.5.1 Wheeled loads

The scantlings of primary supporting members subjected to wheeled loads are to be determined according to Tab 5 considering uniform pressures equivalent to the distribution of vertical concentrated forces, when such forces are closely located.

For the determination of the equivalent uniform pressures, the most unfavorable case, i.e. where the maximum number of axles is located on the same primary supporting member according to Fig 5 to Fig 7, is to be considered.

The equivalent still water pressure and inertial pressure are indicated in Tab 4.

4.5.2 For arrangements different from those shown in Fig 5 to Fig 7, the yielding check of primary supporting members is to be carried out by direct calculation, in compliance with Pt B, Ch 2, Sec 8, [2], taking into account the distribution of concentrated loads induced by the vehicles.

5 Other structures

5.1 Movable decks and inner ramps

5.1.1 The requirements applicable to movable decks and inner ramps are defined in Pt B, Ch 6, Sec 6, [1].

5.2 External ramps

5.2.1 The requirements applicable to external ramps are defined in Pt B, Ch 6, Sec 6, [2].

Table 4 : Wheeled loads
Equivalent uniform still water and inertial pressures

Ship condition	Load case	Still water pressure p_S and inertial pressure p_W, in kN/m²
Still water condition		$p_S = p_{eq}$
Upright condition	"a"	No inertial pressure
	"b"	$p_W = \alpha\, p_{eq}\, a_{Z1} / g$
Inclined condition	"c"	The inertial pressure may be disregarded
	"d"	$p_W = \alpha\, p_{eq}\, a_{Z2} / g$

Note 1:

$$p_{eq} = 10 \frac{n_V Q_A}{\ell s}\left(3 - \frac{X_1 + X_2}{s}\right)$$

n_V : Maximum number of vehicles possible located on the primary supporting member

Q_A : Maximum axle load, in t, defined in Pt B, Ch 3, Sec 4, [3.5]

X_1 : Minimum distance, in m, between two consecutive axles (see Fig 6 and Fig 7)

X_2 : Minimum distance, in m, between axles of two consecutive vehicles (see Fig 7)

α : Coefficient taken equal to:
- 0,5 in general
- 1,0 for landing gears of trailers

Figure 5 : Wheeled loads - Distribution of vehicles on a primary supporting member

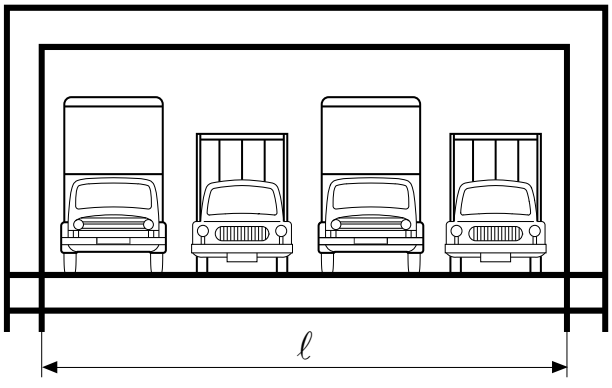

Figure 6 : Wheeled loads
Distance between two consecutive axles

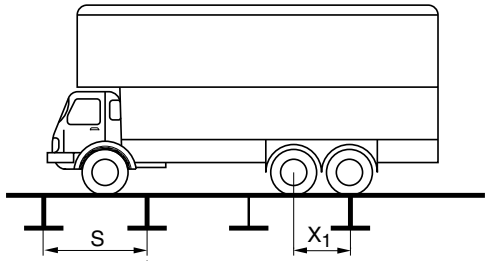

Figure 7 : Wheeled loads
Distance between axles of two consecutive vehicles

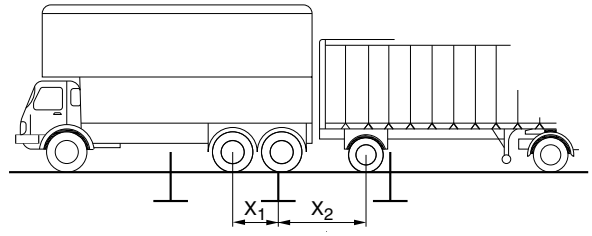

Table 5 : Net scantlings of primary supporting members

Item	w (cm³)	A_{Sh} (cm²)
Transverse primary supporting members	$w = \frac{\gamma_R \gamma_m \beta_b p}{m R_y} S \ell^2 10^3$	$A_{sh} = 10 \gamma_R \gamma_m \beta_s \frac{p}{R_y} S \ell$
Deck girders Double bottom girders	$w = \frac{\gamma_R \gamma_m \beta_b p}{m(R_y - \gamma_R \gamma_m \sigma_{X1})} S \ell^2 10^3$ **(1)**	$A_{Sh} = 10 \gamma_R \gamma_m \beta_S \frac{p}{R_y} S \ell$
	$w = \frac{\gamma_R \gamma_m \beta_b p}{m R_y (1 - 0,18 \gamma_R \gamma_m K_{MZ})} S \ell^2 10^3$ **(2)**	
Vertical primary supporting members	$w = \frac{\gamma_R \gamma_m \lambda_b \beta_b p_E}{m(R_y - \gamma_R \gamma_m \sigma_A)} S \ell^2 10^3$	$A_{sh} = 10 \gamma_R \gamma_m \lambda_S \beta_s \frac{p_E}{R_y} S \ell$

(1) In general

(2) Where alternative requirements developed in Pt B, Ch 5, Sec 6 are applied for vessels with L < 40 m

Note 1:

p : Design load, in kN/m²:

$p = p_S + p_W$

p_S : Still water pressure, in kN/m²:

$p_S = p_{eq}$

p_W : Inertial pressure, in kN/m²:

- for load case "b":

$$p_W = \gamma_{w2} p_{eq} \frac{a_{Z1}}{g}$$

- for load cases "c" and "d" (the inertial pressure in load case "c" may be disregarded):

$$p_W = \gamma_{w2} p_{eq} \frac{a_{Z2}}{g}$$

where:

a_{Z1}, a_{Z2} : Reference value of the vertical acceleration to be determined in compliance with Pt B, Ch 3, Sec 3, [2.3.3]

γ_{w2} : Partial safety factor covering uncertainties regarding wave local loads:

- γ_{w2} = 1,20, in general
- γ_{w2} = 1, for buckling check according to Pt B, Ch 2, Sec 7

p_E : Design load, in kN/m², to be determined according to Pt B, Ch 3, Sec 4, [2.1]

σ_A : Axial stress, to be obtained, in N/mm², from the following formula:

$$\sigma_A = 10 \frac{F_A}{A}$$

F_A : Axial load transmitted to the vertical primary supporting members by the structures above

A : Net sectional area, in cm², of the vertical primary supporting members with attached plating of width b_P

m : Boundary coefficient, to be taken equal to 8.

K_{MZ} : Coefficient defined in Pt B, Ch 5, Sec 6.

SECTION 6 PASSENGER VESSELS

Symbols

B : Breadth, in m, defined in Pt B, Ch 1, Sec 2, [2.2]

B_{WL} : Breadth of waterline, in m, is the breadth of the vessel measured from the outside of the side plating at the scantling draught water line

C_B : Block coefficient, defined in Pt B, Ch 1, Sec 2, [2]

D : Depth, in m, defined in Pt B, Ch 1, Sec 2, [2.3]

KG : Height, in m, of the centre of gravity above base line

L : Rule length, in m, defined in Pt B, Ch 1, Sec 2, [2.1]

L_{WL} : Length of waterline, in m, defined in Pt B, Ch 1, Sec 2, [2.6]

T : Scantling draught, in m, defined in Pt B, Ch 1, Sec 2, [2.4]

v : Maximum speed of the vessel in relation to the water, in km/h

Δ : Displacement, in tons, at scantling draught T.

1 General

1.1 Application

1.1.1 Vessels complying with the requirements of this Section are eligible for the assignment of the service notation **Passenger vessel**, as defined in Pt A, Ch 1, Sec 3, [4.1.1].

1.1.2 Vessels dealt with in this Section are to comply with the requirements stated under Part A, Part B and Part C of the Rules, as applicable, and with the requirements of this Section, which are specific to passenger vessels.

1.1.3 Various requirements of this Section are to be applied for safety of passengers according to Tab 1.

Where available, statutory Rules (dealing with safety) in the operating area of the vessel (e.g. European directive) are to take precedence over these requirements.

Table 1 : Requirements applicable for safety of passengers

Item	Articles
Vessel arrangement	[2]
Fire protection, detection and extinction	[3]
Machinery and systems	[4]
Electrical installations	[5]
Safety devices and equipment	[6]
Buoyancy and stability	[9]

1.2 Documentation to be submitted

1.2.1 In addition to the documents required in other parts of these Rules, the following drawings and documents are to be submitted where applicable, for review:

- ventilation plan
- safety plan (with escape way)
- fire divisions
- vessel arrangement plan
- details of fire protection, detection and extinction
- details of emergency electrical systems
- details of safety devices and equipment
- intact stability calculations
- damage stability calculations.

1.3 Definitions

1.3.1 A-class divisions

A-class divisions are defined in Pt C, Ch 4, Sec 1, [2.2].

1.3.2 B-class divisions

B-class divisions are defined in Pt C, Ch 4, Sec 1, [2.3].

1.3.3 Fire divisions other than steel

Fire divisions other than steel are defined in Pt C, Ch 4, Sec 1, [2.4].

Attention is drawn to the use of composite and/or plywood materials from the point of view of structural fire protection. Regulations of the country where the vessel is registered may entail in some cases a limitation in the use of composite and/or plywood materials.

1.3.4 Cabin vessel

A cabin vessel is a passenger vessel with overnight passenger cabins.

1.3.5 Day trip vessel

A day trip vessel is a passenger vessel without overnight passenger cabins.

1.3.6 Low flame-spread

Definition of low flame-spread is given in Pt C, Ch 4, Sec 1, [2.9].

1.3.7 Main fire zones

Main fire zones are those sections into which the hull, superstructures and deckhouses are divided by divisions of adequate fire integrity:

- the mean length and width of which on any deck does not, in general, exceed 40 m, or
- the area of which on any deck does not exceed 800 m^2.

1.3.8 Margin line

Margin line is an imaginary line drawn on the side plating not less than 10 cm below the bulkhead deck and not less than 10 cm below the lowest non watertight point of the vessel side. If there is no bulkhead deck, a line drawn not less than 10 cm below the lowest line up to which the outer plating is watertight shall be used.

1.3.9 Non-combustible material

Definition of a non-combustible material is given in Pt C, Ch 4, Sec 1, [2.14].

1.3.10 Safe area

Safe area is the area which is externally bounded by a vertical surface running at a distance of $B_{WL}/5$ parallel to the course of the hull in the line of maximum draught.

2 Vessel arrangement

2.1 Watertight subdivision

2.1.1 In addition to the bulkheads called for in Pt B, Ch 2, Sec 1, [1], the vessel is to be subdivided by further watertight transverse bulkheads in such a way that the requirements of Article [9] are met. All these bulkheads are to be extended upwards to the bulkhead deck.

The stepping of bulkheads is permitted only if this is located outside the penetration depths stated in [9.3.4].

2.1.2 The first compartment aft of the collision bulkhead may be shorter than the length of damage stated in [9.3.4] if the total length of the two foremost compartments measured in the plane of maximum draught is not less than this value.

2.1.3 Passenger spaces are to be separated by gastight bulkheads from machinery and boiler spaces.

2.2 Openings in watertight bulkheads

2.2.1 The number of openings in watertight bulkheads shall be as small as is compatible with the construction and proper operation of the vessel.

2.2.2 Open piping systems and ventilation ducts are to be routed in such a way that no further flooding can take place in any considered damaged condition.

Pipelines running within the safe area (see [1.3.10] for definition) and more than 0,5 m above the base line are to be regarded as undamaged.

Bulkhead openings below the margin line are to be made watertight.

2.3 Bulkhead doors

2.3.1 Bulkhead doors are not permitted in the bulkheads between passenger and machinery spaces or boiler spaces.

2.3.2 Bulkhead doors which are normally in the OPEN position must be locally operable from both sides of the bulkhead, must be capable of being closed from an accessible location above the bulkhead deck and must meet the following conditions:

- the closing time is not to be less than 30 s nor more than 60 s
- at the remote control position, indicator lights are to be mounted showing whether the door is open or closed
- during the closing operation, a local audible alarm must sound automatically
- the door drive and signalling systems must also be able to operate independently of the vessel's mains.

Bulkhead doors without remote control are permitted only outside the passenger area. They are to be kept closed and may only be briefly opened to allow passageway.

Bulkhead doors and their systems must be situated within the safe area defined in [1.3.10].

2.4 Bulwark and railing

2.4.1 Parts of the deck intended for passengers, and which are not enclosed, shall comply with the following requirements:

a) They shall be surrounded by a fixed bulwark or guard rail in compliance with Pt B, Ch 7, Sec 2.

b) Openings and equipment for embarking or disembarking and also openings for loading or unloading shall be such that they can be secured.

c) Guard rails and bulwarks are to be at least 1 m high above the decks open to passengers. In way of the aft deckhouse, a similar height is to be arranged. Guard rails and bulwarks intended for use by persons with reduced mobility shall be at least 1,1 m high.

d) For guard rails in passenger areas, deflection without permanent deformation is not permitted to exceed 25 mm in the centre between two stanchions when a load of 1000 N/m is acting on the railing.

3 Fire protection, detection and extinction

3.1 General

3.1.1 The requirements of this Article apply in addition to general requirements for fire protection, detection and extinction developed in Part C, Chapter 4.

3.2 Fire prevention

3.2.1 Sounding pipes

Sounding pipes of fuel tanks may not terminate in accommodation or passenger spaces.

3.3 Fire detection and alarm

3.3.1 All day rooms normally accessible to passengers and crew as well as galleys and machinery spaces are to be monitored by a type tested, automatic fire detection and alarm system.

3.3.2 Detectors are to be grouped into separate sections, each of which shall not comprise more than one main fire zone or one watertight division and not more than two vertically adjacent decks.

If the fire detection system is designed for remote and individual identification of detectors, several decks in one main fire zone respectively one watertight division may be monitored by the same detector loop. The detector loop shall be so arranged, that in the event of a damage (wire break, short circuit, etc.) only a part of the loop becomes faulty.

Smoke detectors shall be used in passage ways, stairways and escape routes. Heat detectors shall be used in cabins in the accommodation area. Flame detectors shall only be used in addition to the other detectors.

3.3.3 The blowout of a fire and the area concerned are to be signalled automatically to a permanently manned station.

3.3.4 Requirements [3.3.2] and [3.3.3] are deemed to be met in the case of spaces protected by an automatic pressure water-spraying system designed in accordance with Pt C, Ch 4, Sec 4, [3].

3.3.5 Manually operated call points are to be provided in addition to the automatic system:

- in passageways, enclosed stairways and at lifts
- in saloons, day rooms and dining rooms
- in machinery spaces, galleys and spaces with a similar fire hazard.

The manually operated call points shall be spaced not more than 10 m apart, however at least one call point shall be available in every watertight compartment.

3.3.6 The alarm set off by a manual call point shall be transmitted only to the rooms of the vessel's officers and crew and must be capable of being cancelled by the vessel's officers. Manual call points are to be safeguarded against unintended operation.

3.4 Control of smoke spread

3.4.1 Control centres, stairways and internal assembly stations shall be provided with a natural or a mechanical smoke extraction system.

Smoke extraction systems shall comply with [3.4.2] to [3.4.8].

3.4.2 They shall provide sufficient capacity and reliability.

3.4.3 They shall consider the operating conditions of passenger vessels.

3.4.4 When the normal ventilation system is used for this purpose, it shall be designed that its function will not be impaired by smoke.

3.4.5 They shall be provided with manual actuation.

3.4.6 It shall be possible to operate mechanical smoke extraction systems from a position permanently occupied by crew.

3.4.7 Natural smoke extraction systems shall be provided with an opening mechanism, operated either manually or by a power source inside the ventilator.

3.4.8 Manually operated actuators and opening mechanism shall be accessible from inside and outside of the protected space.

3.5 Fire containment

3.5.1 The following passenger areas shall be divided by vertical divisions complying with [3.6]:

a) passenger areas with a total surface area of more than 800 m^2

b) passenger areas in which there are cabins, at intervals of not more than 40 m.

The vertical divisions shall be smoke-tight under normal operating conditions and shall be continuous from deck to deck.

The doors shall be of self-closing type or shall be capable of remote release from the bridge and individually from both sides of the door. Status of each fire door (open/ closed position) shall be indicated on the bridge.

3.5.2 Hollows above ceilings, beneath floors and behind wall claddings shall be separated at intervals of not more than 14 m by non-combustible draught stops which, even in the event of fire, provide an effective fireproof seal.

3.6 Fire structural integrity

3.6.1 Integrity of bulkheads and decks

The minimum fire integrity of all bulkheads and decks shall be as shown in Tab 2.

3.6.2 For the purpose of determining the appropriate fire integrity standard to be applied to boundaries between adjacent spaces, such spaces are classified according to their fire risk described in the following categories.

The title of each category is intended to be typical rather than restrictive.

a) Control centres: defined in Pt C, Ch 4, Sec 1, [2.5]

   Wheelhouse, rooms containing the vessel’s radio equipment, rooms containing centralised fire alarm equipment, rooms containing centralised emergency public address system stations and equipment, etc.

b) Stairwells: defined in Pt C, Ch 4, Sec 1, [2.19]

   Interior stairwells, lifts, enclosed emergency escape trunks. In this connection a stairwell which is enclosed at one level only shall be regarded as part of the space from which it is not separated by a fire door, etc.

c) Muster areas: defined in Pt C, Ch 4, Sec 1, [2.13]

d) Lounges: defined in Pt C, Ch 4, Sec 1, [2.8]

   Cabins, public spaces, sale shops, barber shops and beauty parlours, saunas, pantries containing no cooking appliances, small lockers (deck area < 4 m^2), etc.

e) Machinery spaces: defined in Pt C, Ch 4, Sec 1, [2.11]

   Main propulsion machinery room, auxiliary machinery spaces, etc.

f) Galleys: defined in Pt C, Ch 4, Sec 1, [2.7]

g) Store rooms: defined in Pt C, Ch 4, Sec 1, [2.21]

   Miscellaneous stores, lockers having deck area exceeding 4 m^2, air conditioning rooms.

Table 2 : Fire integrity of bulkheads and decks

Spaces	Control centres	Stairwells	Muster areas	Lounges	Machinery spaces of Category A	Galleys	Store rooms
Control centres	–	A0	A0 / B0 **(1)**	B0	A30	A0	A0
Stairwells		–	A0	B0	A30	A0	A0
Muster areas			–	A0 / B0 **(2)**	A30	A0	A0
Lounges				– / B0 **(3)**	A30	A0	A0
Machinery spaces of Category A					A30 / A0 **(4)**	A15	A0
Galleys						–	A0 / B0 **(5)**
Store rooms							–

(1) Divisions between control centres and internal muster areas shall correspond to type A0, but external muster areas only to type B0.
(2) Divisions between lounges and internal muster areas shall correspond to type A0, but external muster areas only to type B0.
(3) Divisions between cabins, divisions between cabins and corridors and vertical divisions separating lounges according to [3.5.1] shall comply with B0.
(4) Divisions between machinery spaces of Category A shall comply with type A30; in other cases they shall comply with type A0.
(5) B0 is sufficient for divisions between galleys, on the one hand, and cold-storage rooms and food store rooms, on the other.

3.6.3 Fire protection materials

a) Insulation materials shall comply with Pt C, Ch 4, Sec 2, [2.3.1].

b) Ceilings and linings in accommodation spaces including their substructures shall be of non-combustible material, unless the space is protected with a sprinkler installation.

Primary deck coverings and surface materials shall be of an approved type.

3.6.4 All stairways are to be of steel frame or other equivalent non-combustible construction.

Stairways connecting more than two decks are to be enclosed by at least class B bulkheads. Stairways connecting only two decks need to be protected at least at one deck level by class B bulkheads. Doors shall have the same fire resistance as the bulkheads in which they are fitted.

Where class A and B divisions are penetrated for the passage of cables, pipes, trunks, ducts etc. or for the fitting of ventilation terminals, lighting fixtures and similar devices, arrangements shall be made to ensure that the fire resistance is not impaired.

3.6.5 Ventilation system

All parts of the system shall be made of non-combustible material, except that short ducts applied at the end of the ventilation device may be made of a material which has low-flame spread characteristics.

The ventilation ducts shall be divided with closing appliances analogously to the requirements of [3.5.1].

When ventilation ducts with a cross-section of more than 0,02 m^2 are passed through partitions according to [3.6.1] of type A or partitions according to [3.5.1], they shall be fitted with approved fire dampers which can be operated from a location permanently manned by shipboard personnel or crew members.

3.7 Fire fighting

3.7.1 General water fire extinguishing system

Passenger vessels over 40 m L_{WL} and passenger vessels with cabins for passengers over 25 m L_{WL} are, in addition to applicable requirements of Pt C, Ch 4, Sec 4, subject to the following requirements:

a) It must be possible to project at least two jets of water simultaneously on any part of the vessel from two different hydrants using for each a single length of hose not more than 20 m long. The length of throw must be at least 12 m with a nozzle diameter of 12 mm.

b) The minimum capacity of the fire pump is to be 20 m^3/h.

c) If the fire pump is located in the engine room, a second power-driven fire pump must be provided outside the engine room. The pump drive must be independent of the engine room, and the pump capacity must conform to the preceding items a) and b).

   Connections in the piping system with the engine room must be capable of being shut off from outside at the point of entry into the engine room.

   A portable pump may be accepted, provided that a permanently installed pump is available in the engine room.

d) Two fire hoses with dual-purpose nozzles are to be located in hose boxes in both fore ship and aft ship. Further fire hoses may be required depending on the size and structural features of the vessel.

3.7.2 Portable fire extinguishers

a) One additional fire extinguisher is to be provided for:
   - each unit of 120 m^2, or part thereof, of the gross floor area in passenger areas
   - each group of 10 cabins, or part thereof.

b) Galleys and shops shall, depending on their size and contents, be provided with additional fire extinguishers.

c) These additional fire extinguishers are to be installed and distributed on the vessel so that, in the event of fire starting at any point and at any time, a fire extinguisher can be reached immediately.

3.7.3 Fixed gas fire extinguishing systems

Machinery spaces containing internal combustion engines and oil fired boilers shall be provided with a fixed gas fire extinguishing system in compliance with Pt C, Ch 4, Sec 4, [4].

3.7.4 Automatic pressure water spraying system

Where installed, automatic pressure water spraying systems for the passenger area must be ready for operation at all times when passengers are on board. No additional measures on the part of the crew must be needed to actuate the system.

3.8 Escape

3.8.1 Means of escape

The number and width of the exits of passenger rooms shall comply with the applicable statutory Regulations or recognized standards, e.g., ES-TRIN.

3.8.2 Doors of passenger rooms

Doors of passenger rooms shall comply with the following requirements:

a) With the exception of doors leading to connecting corridors, they shall be capable of being opened outwards or be constructed as sliding doors.

b) Cabin doors shall be made in such a way that they can also be unlocked from the outside at any time.

c) Powered doors shall open easily in the event of failure of the power supply to this mechanism.

3.8.3 Stairs

Stairs and their landings in the passenger areas shall comply with the following requirements:

a) They shall be designed and constructed in accordance with applicable statutory Regulations and/or recognized standards, e.g., EN 13056.

b) Where there is not at least one staircase on each side of the vessel in the same room, they shall lie in the safe area.

3.8.4 Escape routes

Escape routes shall comply with the following requirements:

a) Stairways, exits and emergency exits shall be so disposed that, in the event of a fire in any given area, the other areas may be evacuated safely.

b) The escape routes shall lead by the shortest route to muster areas.

c) Escape routes shall not lead through engine rooms or galleys. This requirement item does not apply to vessels with L_{WL} not exceeding 25 m, as long as a second escape route is available.

d) There shall be no rungs, ladders or the like installed at any point along the escape routes.

e) Doors to escape routes shall be constructed in such a way as not to reduce the minimum width of the escape route.

f) Escape routes and emergency exits shall be clearly signed. The signs shall be lit by the emergency lighting system.

3.8.5 Escape routes and emergency exits shall be provided with a suitable safety guidance system. Such a system shall take the form of low-location lighting (LLL), i.e., electrically powered lighting or photo-luminescent indicators placed along the escape routes so as to ensure that such routes can be easily identified.

4 Machinery and systems

4.1 Bilge system

4.1.1 General

Each watertight compartment shall be fitted with a bilge level alarm.

4.1.2 Number and capacity of bilge pumps

A bilge pumping system with permanently installed pipe work shall be available.

The number and capacity of bilge pumps are to be in compliance with Pt C, Ch 1, Sec 10, [6.7].

Further bilge pumps may be required according to size and propulsion power.

5 Electrical installations

5.1 General

5.1.1 Application

Cabin vessels and day trip vessels ($L_{WL} \geq 25$ m) are required to comply with this Article in addition to the requirements stated in Part C, Chapter 2.

Relaxations of these requirements may be allowed for ferries and day trip vessels, at the Society's discretion.

5.2 Emergency power supply

5.2.1 General

An emergency source of electrical power independent of the main power supply is to be provided which is capable of feeding the electrical systems and consumers essential to the safety of passengers and crew. The feeding time depends on the purpose of the vessel and should be agreed with the national Authority, but shall not be less than half an hour. The power supply to the following systems is especially relevant to the safety of passengers and crew:

a) navigation and signalling lights

b) sound devices such as Tyfon

c) emergency lighting

d) radio installations

e) alarm systems for vessel safety

f) public address system (general alarm)

g) telecommunication systems essential to safety and the operation of the vessel

h) emergency searchlights

i) fire detection system

j) sprinkler systems and other safety installations.

5.2.2 Emergency source of electrical power

The following are admissible for use as an emergency power source:

a) auxiliary generator sets with their own independent fuel supply and independent cooling system which, in the event of a power failure, turn on and take over the supply of power within 45 seconds automatically or, if they are located in the immediate vicinity of the wheelhouse or any other location permanently manned by crew members, can be turned on manually, or

b) storage batteries, which, in the event of a power failure, turn on automatically or, if they are located in the immediate vicinity of the wheelhouse or any other location permanently manned by crew members, can be turned on manually. They shall be capable of powering the above mentioned power consumers throughout the prescribed period without recharging and without an unacceptable voltage reduction.

5.2.3 Installation

Emergency generator sets, emergency storage batteries and the relevant switchgear are to be installed outside the machinery space, the machinery casings and the main generator room. They are to be separated from these spaces by low flame-spread and watertight bulkheads so that the emergency power supply will not be impaired in the event of a fire or other accident in the machinery space.

Facilities are to be provided for the periodical operational testing of all items of equipment serving the emergency power supply system including especially the automatic switchgear and starting equipment. Such tests must be possible without interference with other aspects of the vessel operation.

5.3 Lighting systems

5.3.1 Construction and extent of the main lighting system

There is to be a main lighting system supplied by the main source of electrical power and illuminating all parts of the vessel normally accessible to the passengers and crew. This system is to be installed in accordance with Pt C, Ch 2, Sec 12.

5.3.2 Construction and extent of the emergency lighting system

a) Construction

An emergency lighting system is to be installed, the extent of which shall conform to item b).

The power supply and the duration of the supply shall conform to [5.2].

As far as practicable the emergency lighting system shall be installed in a manner, that it will not be rendered unserviceable by a fire or other incident in rooms in which the main source of electrical power, any associated transformers, the main switchboard and the main lighting distribution panel are installed.

The emergency lighting system shall be cut in automatically following a failure of the main power supply. Local switches are to be provided only where it may be necessary to switch off the emergency lighting (e.g. in the wheelhouse).

Emergency lights must be marked as such for ease of identification.

b) Extent

Adequate emergency lighting must be provided in the following areas:

- positions at which collective life-saving appliances are stored and at which they are normally prepared for use
- escapes, exits, connecting passageways, lifts and stairways in the accommodation area
- marking indicating escapes and exits
- machinery spaces and their exits
- wheelhouse
- space of the emergency power source
- locations of fire extinguishers and fire pumps
- rooms in which passengers and crew assemble in an emergency.

c) If a vessel is divided into main fire zones, at least two circuits are to be provided for the lighting of each main fire zone, and each of these must have its own power supply line. One circuit shall be supplied from the emergency power source. The supply lines are to be so located that, in the event of a fire in one main fire zone, the lighting in the other zones is as far as practicable maintained.

5.3.3 Final subcircuits

In the important spaces mentioned below the lighting shall be supplied by at least two different circuits:

- passageways
- stairways leading to the boat deck, and public spaces and day rooms for passengers and crew
- large galleys.

The lamps are to be so arranged that adequate lighting is maintained even if one of the circuits fails.

6 Safety devices and equipment

6.1 General

6.1.1 Application

The requirements of this Article apply to cabin vessels and day trip vessels with length L_{WL} exceeding 25 m.

Relaxations of these requirements may be allowed for ferries and day trip vessels, at the Society's discretion.

6.2 Alarm and communication systems

6.2.1 Passenger alarm system

Passenger vessels with cabins must be equipped with a passenger alarm system. This must be capable of being actuated from the wheelhouse and a permanently manned station. The alarm must be clearly perceptible in all rooms accessible to passengers. The alarm actuator has to be safeguarded against unintended operation.

6.2.2 Crew alarm system

Passenger vessels with cabins must be equipped with a crew alarm system in each cabin, in alleyways, lifts and stairwells, such that the distance to the next actuator is not more than 10 m, but at least one actuator every watertight compartment; in crew mess rooms, engine rooms, kitchens and similar fire hazard rooms.

6.2.3 Engineer’s alarm

An engineer's alarm is to be provided enabling the machinery personnel to be summoned in their quarters from the engine room should this be rendered necessary by the arrangement of the machinery space in relation to the engineers' accommodation.

6.3 Intercommunications

6.3.1 Intercommunications from the bridge

Where no direct means of communication exist between the bridge and the:

- crew's day rooms
- service spaces
- engine room (control platform)
- foreship and aftship,

a suitable intercommunications system is to be provided.

The general telephone system can be approved for this purpose provided it is guaranteed that the bridge/engine link always has priority and that existing calls on this line between other parties can be interrupted.

Where a telephone system is used, the engineer's alarm may be dispensed with provided that two-way communication is possible between the machinery space and the engineers' accommodation.

6.3.2 Public address systems

Vessels with a length L_{WL} greater than or equal to 40 m and vessels intended for more than 75 passengers must be equipped with loudspeakers capable of reaching all the passengers.

6.4 Fire door and watertight door closure indicators

6.4.1 The door release panel on the bridge or in the permanently manned safety station shall be equipped with indicators signalling the closure and the opening of fire doors or watertight doors.

7 Design loads

7.1 General

7.1.1 The design loads are to be determined in compliance with Part B, Chapter 3.

7.2 Loads due to list and wind action

7.2.1 The following loads inducing racking in the vessel superstructures are to be considered:

a) Structural and non-structural still water horizontal loads under list or roll angle to be taken not less than 0,21 rad (12°)

b) Structural and non-structural inertial horizontal loads under vessel acceleration to be determined according to Pt B, Ch 3, Sec 3, [2.1.4], where the roll amplitude is to be taken not less than 0,21 rad (12°)

c) Wind force, corresponding to a lateral pressure determined according to Pt B, Ch 3, Sec 4, [2.1.3].

7.3 Loads induced by collision

7.3.1 In the case of sensitive superstructures, the Society may require the structure to be checked against collision induced loads.The values of the longitudinal and transverse accelerations, in m/s^2, are to be taken not less than:

- longitudinal acceleration: a = 3,0 m/s^2
- transverse acceleration: a = 1,5 m/s^2.

8 Scantlings

8.1 General

8.1.1 The hull scantlings are to be as specified in Part B, Chapter 5 and relevant Sections of Part B, Chapter 6.

A thicker sheerstrake may be waived if an efficient fender is fitted in way of the main deck.

8.2 Additional requirements

8.2.1 Hull girder section modulus

The hull girder section modulus to be used for the scantling of hull and contributing superstructures/deckhouses, is to be determined in compliance with Pt B, Ch 4, Sec 1, taking into account the strength deck or the contributing deck up to which the considered superstructure/deckhouse extends.

8.2.2 Catamarans

Scantlings of primary structural members contributing to the transverse bending strength and torsional strength are to be supported by direct calculations.

Special attention is to be paid to the staggering of resistant members in the two hulls.

A method for the determination of scantlings of deck beams connecting the hulls of a catamaran subject to pitching torsional moment is given in Pt B, Ch 4, Sec 2, [2]. Any other agreed method of calculation may be accepted by the Society.

8.3 Superstructures and deckhouses

8.3.1 The arrangement and scantlings of superstructures and deckhouses are to be in compliance with Pt B, Ch 6, Sec 4.

8.3.2 Transverse strength

The existing constructive arrangements must ensure an effective transverse strength of the superstructures and deckhouses notably, by means of end bulkheads, partial or complete intermediate bulkheads and appropriate number of continuous and complete gantries.

Scantlings of primary structural members contributing to the transverse strength of superstructures and deckhouses are to be supported by racking direct analysis, to be performed according to Pt B, Ch 2, Sec 8, [2], considering loads due to list and wind action defined in [7.2]. The partial safety factor covering uncertainties regarding resistance, γ_R, is to be taken equal to 1,20.

8.3.3 Window stiles

The strength of stiles of windows fitted in superstructures contributing to the hull girder strength is to be ensured in all operating conditions.

The scantling of window stiles is to be supported by direct calculation performed according to Pt B, Ch 2, Sec 8, [2]. The partial safety factor covering uncertainties regarding resistance, γ_R, is to be taken equal to 1,20. The strength analysis, including the details of load in the window stiles calculation, is to be submitted to the Society.

9 Buoyancy and stability

9.1 General

9.1.1 General requirements of Pt B, Ch 2, Sec 2 are to be complied with.

9.2 Intact stability

9.2.1 General

Proof of appropriate intact stability of the vessel shall be furnished. All calculations shall be carried out free to trim and sinkage.

The lightship data taken into account for the stability calculation shall be determined by means of an inclining test.

9.2.2 Standard load conditions

The intact stability shall be proven for the following standard load conditions:

a) at the start of the voyage:

100% passengers, 98% fuel and fresh water, 10% waste water

b) during the voyage:

100% passengers, 50% fuel and fresh water, 50% waste water

c) at the end of the voyage:

100% passengers, 10% fuel and fresh water, 98% waste water

d) unladen vessel:

no passengers, 10% fuel and fresh water, no waste water.

For all standard load conditions, the ballast tanks shall be considered as either empty or full in accordance with normal operational conditions.

As a precondition for changing the ballast whilst under way, the requirement of [9.2.3], item d), shall be proven for the following load condition:

- 100% passengers, 50% fuel and fresh water, 50% waste water, all other liquid (including ballast) tanks are considered filled to 50%.

9.2.3 Intact stability criteria

The proof of adequate intact stability by means of a calculation shall be produced using the following intact stability criteria, for the standard load conditions mentioned in [9.2.2], items a) to d):

a) The maximum righting lever arm h_{max} shall occur at a list angle of $\varphi_{max} \geq (\varphi_{mom} + 3°)$ and must not be less than 0,20 m. However, in case $\varphi_f < \varphi_{max}$ the righting lever arm at the downflooding angle φ_f must not be less than 0,20 m.

b) The downflooding angle φ_f must not be less than $\varphi_{mom} + 3°$.

c) The area A under the curve of the righting lever arm shall, depending on the position of φ_f and φ_{max}, reach at least the values given in Tab 3, where:

φ	:	List angle
φ_f	:	List angle, at which openings in the hull, in the superstructure or deck houses which cannot be closed so as to be weathertight, submerge
φ_{max}	:	List angle at which the maximum righting lever arm occurs
φ_{mom}	:	Maximum list angle defined under item e)
A	:	Area beneath the curve of the righting lever arms.

d) The metacentric height at the start, GM_0, corrected by the effect of the free surfaces in liquid tanks, shall not be less than 0,15 m.

e) In each of the following two cases, the list angle φ_{mom} shall not be in excess of the value of 12°:

- in application of the heeling moment due to persons and wind according to [9.2.4] and [9.2.5]
- in application of the heeling moment due to persons and turning according to [9.2.4] and [9.2.6].

f) For a heeling moment resulting from moments due to persons, wind and turning according to [9.2.4], [9.2.5] and [9.2.6], the residual freeboard shall be not less than 200 mm.

g) For vessels with windows or other openings in the hull located below the bulkhead decks and not closed watertight, the residual safety clearance shall be at least 100 mm on the application of the heeling moments resulting from item f).

9.2.4 Moment due to crowding of persons

The heeling moment M_P, in kN.m, due to one-sided accumulation of persons is to be calculated according to the following formula:

$$M_P = 9,81 P y = 9,81 \sum P_i y_i$$

where:

P : Total weight of persons on board, in t, calculated by adding up the maximum permitted number of passengers and the maximum number of shipboard personnel and crew under normal operating conditions, assuming an average weight per person of 0,075 t

y : Lateral distance, in m, of center of gravity of total weight of persons P from center line

y_i : Lateral distance, in m, of geometrical center of area A_i from center line

P_i : Weight of persons accumulated on area A_i, in t:

$P_i = 0,075\ n_i\ A_i$

A_i : Area, in m², occupied by persons

n_i : Number of persons per square meter

for free deck areas and deck areas with movable furniture: $n_i = 3,75$

for deck areas with fixed seating furniture such as benches, n_i shall be calculated by assuming an area of 0,50 m in width and 0,75 m in seat depth per person.

Table 3 : Area A under the curve of righting lever arm

Case		A, in m·rad
1	$\varphi_{max} \le 15°$ or $\varphi_f \le 15°$	0,05 up to MIN(φ_{max}, φ_f)
2	$15° < \varphi_{max} < 30°$ and $\varphi_{max} \le \varphi_f$	$0,035 + 0,001\ (30 - \varphi_{max})$ up to angle φ_{max}
3	$15° < \varphi_f < 30°$ and $\varphi_{max} > \varphi_f$	$0,035 + 0,001\ (30 - \varphi_f)$ up to angle φ_f
4	$\varphi_{max} \ge 30°$ and $\varphi_f \ge 30°$	0,035 up to angle $\varphi = 30°$

The calculation shall be carried out for an accumulation of persons both to starboard and to port.

The distribution of persons shall correspond to the most unfavorable one from the point of view of stability. Cabins shall be assumed unoccupied for the calculation of the person moment.

For calculation of the loading cases, the centre of gravity of a person should be taken as 1 m above the lowest point of the deck at 1/2 L_{WL}, ignoring any deck curvature and assuming a weight of 0,075 t per person.

A detailed calculation of deck areas which are occupied by persons may be dispensed with if the following values are used:

- $y = B / 2$
- $P = 1,1 \cdot n_{max} \cdot 0,075$ for day trip vessels
  $P = 1,5 \cdot n_{max} \cdot 0,075$ for cabin vessels
  where:
  n_{max} : Maximum permitted number of persons.

9.2.5 Moment due to lateral wind pressure

The moment M_W, in kN.m, due to lateral wind pressure is to be determined by the following formula:

$$M_W = p_{WD}\ A_W\ (\ell_W + T / 2)$$

where:

p_{WD} : Wind pressure, in kN/m², defined in Pt B, Ch 3, Sec 4, [2.1.3]

A_W : Lateral area above water, in m²

ℓ_W : Distance, in m, of the centre of gravity of area A_W, from the draught mark.

9.2.6 Turning circle moment

The moment M_{dr}, in kN.m, due to centrifugal force caused by the turning circle, is to be determined by the following formula:

$$M_{dr} = \frac{0,0347 C_B v^2 \Delta}{L_{WL}}\left(KG - \frac{T}{2}\right)$$

If not known, the block coefficient C_B is to be taken as 1,0.

For passenger vessels with special propulsion systems (rudder-propeller, water-jet, cycloidal-propeller and bow-thruster), M_{dr} shall be derived from full-scale or model tests or else from corresponding calculations.

9.3 Damage stability

9.3.1 Proof of appropriate damage stability of the vessel shall be furnished by means of a calculation based on the method of lost buoyancy. All calculations shall be carried out free to trim and sinkage.

Relaxations of these requirements may be allowed for ferries and day trip vessels, at the Society's discretion.

9.3.2 Buoyancy of the vessel in the event of flooding shall be proven for the standard load conditions specified in [9.2.2]. Accordingly, mathematical proof of sufficient stability shall be determined for the three intermediate stages of flooding (25%, 50% and 75% of flood build-up) and for the final stage of flooding.

9.3.3 Passenger vessels shall comply with the one-compartment status.

9.3.4 Assumptions

In the event of flooding, assumptions concerning the extent of damage given in Tab 4 shall be taken into account.

a) The bulkheads can be assumed to be intact if the distance between two adjacent bulkheads is greater than the damage length. Longitudinal bulkheads at a distance

of less than B / 3 measured rectangular to centre line from the shell plating at the maximum draught plane shall not be taken into account for calculation purposes.

b) The lowest point of every non-watertight opening (e.g. doors, windows, access hatchways) shall lie at least 0,10 m above the damage waterline. The bulkhead deck shall not be immersed in the final stage of flooding.

c) Permeability is assumed to be 95%. If it is proven by a calculation that the average permeability of any compartment is less than 95%, the calculated value can be used instead.

The values to be adopted shall not be less than those given in Tab 5.

d) If damage of a smaller dimension than specified above produces more detrimental effects with respect to listing or loss of metacentric height, such damage shall be taken into account for calculation purposes.

9.3.5 Damage stability criteria

a) For all intermediate stages of flooding referred to in [9.3.2], the following criteria shall be met:

- the angle of heel φ at the equilibrium position of the intermediate stage of flooding in question shall not exceed 15°
- beyond the inclination in the equilibrium position of the intermediate stage of flooding in question, the positive part of the righting lever arm curve shall display a righting lever arm value of GZ ≥ 0,02 m before the first unprotected opening becomes immersed or in any case before reaching an angle of heel φ of 25°
- non-watertight openings shall not be immersed before the inclination in the equilibrium position of the intermediate stage of flooding in question has been reached
- the calculation of the free surface effect in all intermediate stages of flooding shall be based on the gross surface area of the damaged compartments.

b) During the final stage of flooding, the following criteria shall be met (see Fig 1) taking into account the heeling moment due to persons in accordance with [9.2.4]:

- the angle of heel φ_E shall not exceed 10°
- beyond the equilibrium position the positive part of the righting lever arm curve shall display a righting lever arm value of $GZ_R \geq 0,02$ m with an area A ≥ 0,0025 m·rad. These minimum values for stability shall be met until the immersion of the first unprotected opening or in any case before reaching an angle of heel $\varphi_m \leq 25°$
- non-watertight openings shall not be immersed before the trimmed position has been reached; if such openings are immersed before this point, the rooms affording access are deemed to be flooded for damage stability calculation purposes.

Table 4 : Extent of damage

Dimension of the damage		Extent of damage, in m
Side damage	longitudinal ℓ	0,1 L_{WL} ≥ 4 **(1)**
	transverse b	B / 5
	vertical h	from vessel bottom to top without delimitation
Bottom damage	longitudinal ℓ	0,1 L_{WL} ≥ 4 **(1)**
	transverse b	B / 5
	vertical h	0,59; pipework shall be deemed intact **(2)**

(1) For vessels with $L_{WL} \leq 25$, smaller values of the damage extent may be accepted by the Society on a case-by-case basis.

(2) Where a pipework system has no open outlet in a compartment, the pipework shall be regarded as intact in the event of this compartment being damaged, if it runs within the safe area and is more than 0,50 m off the bottom of the vessel.

Table 5 : Permeability values

Spaces	μ, in %
Lounges	95
Engine and boiler rooms	85
Luggage and store rooms	75
Double bottoms, fuel bunkers and other tanks, depending on whether, according to their intended purpose, they are to be assumed to be full or empty for the vessel floating at the plane of maximum draught	0 or 95

Note 1: For vessels with $L_{WL} \leq 25$, smaller values of permeability may be accepted by the Society on a case-by-case basis, if it is proven by a calculation.

9.3.6 The shut-off devices which shall be able to be closed watertight shall be marked accordingly.

9.3.7 If cross-flood openings to reduce asymmetrical flooding are provided, they shall meet the following conditions:

a) for the calculation of cross-flooding, IMO Resolution A.266 (VIII) shall be applied

b) they shall be self-acting

c) they shall not be equipped with shut-off devices

d) the total time allowed for compensation shall not exceed 15 minutes.

9.3.8 As an alternative to the requirements set out in [9.3.5] to [9.3.7], proof of adequate stability after damage of passenger vessels authorised to carry up to a maximum of 50 passengers and with a length L_{WL} not exceeding 25 m, may be furnished by the compliance with the following criteria after symmetrical flooding:

a) the immersion of the vessel shall not exceed the margin line, and

b) the metacentric height G_{MR} shall not be less than 0,10 m.

Figure 1 : Proof of damage stability (final stage of flooding)

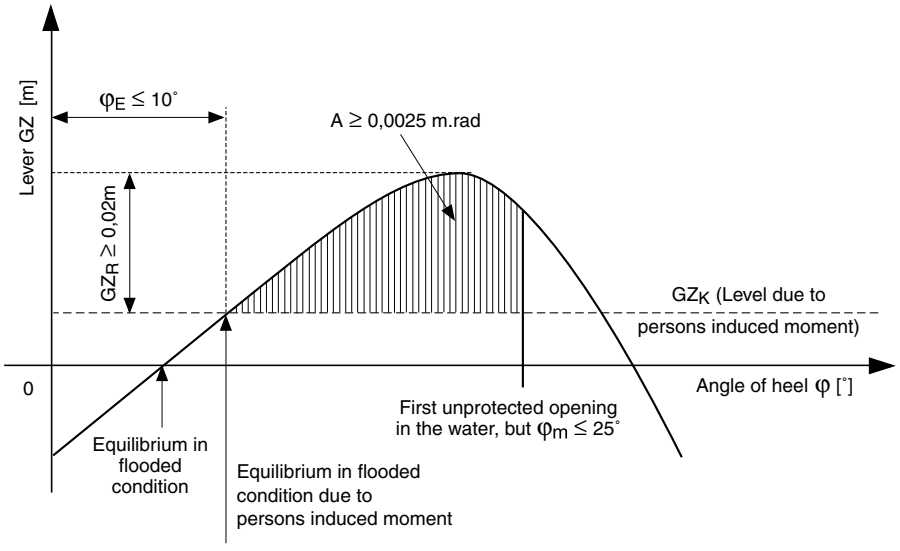

9.4 Safety clearance and freeboard

9.4.1 General

The requirements of this sub-article do not apply to vessels authorised to carry up to a maximum of 50 passengers and with a length L_{WL} not exceeding 25 m.

9.4.2 Safety clearance

The safety clearance shall be at least equal to the sum of:

a) the additional lateral immersion, which, measured on the outside plating, is produced by the permissible angle of heel according to [9.2.3], item e), and

b) the residual safety clearance according to [9.2.3], item g).

For vessels without a bulkhead deck, the safety clearance shall be at least 500 mm.

9.4.3 Freeboard

The freeboard shall correspond to at least the sum of:

a) the additional lateral immersion, which, measured on the outside plating, is produced by the angle of heel according to [9.2.3], item e), and

b) the residual freeboard according to [9.2.3], item f).

The freeboard shall be at least 300 mm.

9.4.4 The plane of maximum draught is to be set so as to ensure compliance with the safety clearance according to [9.4.2], and the freeboard according to [9.4.3].

9.4.5 For safety reasons, the Society may stipulate a greater safety clearance or a greater freeboard.

SECTION 7 TUGS AND PUSHERS

Symbols

k : Material factor defined in:
- Pt B, Ch 2, Sec 3, [2.3] for steel
- Pt B, Ch 2, Sec 3, [3.5] for aluminium alloys

k_0 : Coefficient to be taken equal to:
- k_0= 1 for steel
- k_0= 2,35 for aluminium alloys

L : Rule length, in m, defined in Pt B, Ch 1, Sec 2, [2]

t : Net thickness, in mm, of plating.

1 General

1.1 Application

1.1.1 Vessels complying with the requirements of this Section are eligible for the assignment of the service notation **Tug** or **Pusher**, as defined in Pt A, Ch 1, Sec 3, [6.1.4] or Pt A, Ch 1, Sec 3, [6.1.3].

1.1.2 Vessels dealt with in this Section are to comply with the requirements stated in Part A, Part B and Part C, as applicable, and with the requirements of this Section, which are specific to tugs and pushers.

In particular, when pushed convoy or side-by-side formation comprises a vessel carrying dangerous goods, vessels used for propulsion shall meet the requirements of Ch 3, Sec 8, [2] and Ch 3, Sec 9, [2], as applicable.

1.2 Documents to be submitted

1.2.1 In addition to the documentation requested in Pt B, Ch 1, Sec 3, a drawing showing the towing/pushing devices and their installation is to be submitted to the Society for review. The maximum towing/pushing force contemplated is to be mentioned on that drawing.

2 Stability

2.1 General

2.1.1 The Society may waive the requirements of this Article depending on the vessel design and operating conditions.

2.1.2 The general requirements of Pt B, Ch 2, Sec 2 are to be complied with.

2.1.3 For tugs, the additional stability requirements in [2.2] are to be complied with in all intended loading conditions.

2.2 Additional intact stability for tugs

2.2.1 All intended loading conditions are also to be checked in order to investigate the vessel's capability to support the effect of the towing force in the beam direction.

A tug may be considered as having sufficient stability, according to the effect of the towing force in the beam direction, if the following condition is complied with:

$A \geq 0{,}011$

where:

A : Area, in m·rad, contained between the righting lever and the heeling arm curves, measured from the heeling angle φ_C to the heeling angle φ_D

φ_C : Heeling angle of equilibrium, corresponding to the first intersection between heeling and righting arms

φ_D : Heeling angle, to be taken as the lowest of:
- the angle φ_M, corresponding to the position of GZ_{MAX} (see Fig 1)
- the angle of downflooding.

The heeling arm curve is to be calculated as follows:

$$b_H = \frac{THc}{9{,}81\Delta}\cos\varphi$$

where:

b_H : Heeling arm, in m

T : Maximum towing pull, in kN

Where T is unknown, it can be assumed equal to:
- 0,179 P for propellers not fitted with nozzles
- 0,228 P for propellers fitted with nozzles

P : Maximum continuous power, in kW, of the propulsion engine

H : Vertical distance, in m, between the towing hook, or equivalent fitting, and half draught corresponding to Δ

c : Coefficient equal to:
- 1,00 for vessels with azimuth propulsion
- 0,65 for vessels with non-azimuth propulsion

Δ : Loading condition displacement, in t.

Figure 1 : Heeling and righting arm curves

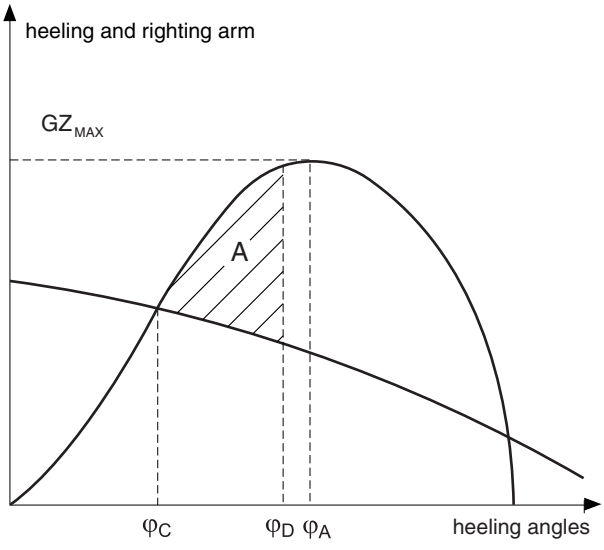

3 Arrangement

3.1 Towing devices

3.1.1 Connection with hull structures

On tugs towing astern, the connection of the towing hook to the hull structure is to be strengthened by means of sufficient framing.

On tugs using a broadside tow, the towing bitts are to be secured to stools adequately supported by web frames or bulkheads, the latter being located on either side of the bitts.

3.2 Pushing devices

3.2.1 Transom plate

Pushers are to be arranged with an efficient flat transom plate or any other equivalent device at the fore end of the vessel the structure of which is to be in compliance with Pt B, Ch 7, Sec 6.

3.3 Hull protection

3.3.1 Fenders

A strong fender for the protection of the tug's sides is to be fitted at deck level.

Alternatively, loose side fenders may be fitted, provided that they are supported by vertical ordinary stiffeners extending from the lightship waterline to the fenders themselves.

4 Hull scantlings

4.1 General

4.1.1 The scantlings of the hull structure are to be determined in compliance with Part B, Chapter 5, taking into account additional requirements defined in [4.2].

4.2 Additional requirements

4.2.1 Minimum net thickness of plating

The minimum thickness of the shell plating and deck plating are to be obtained from Tab 1.

Table 1 : Minimum net thickness t of plating

Plating	t, in mm
Decks, sides, bottom, bulkheads, web of primary supporting members, web of ordinary stiffeners and other structures	$t = 3,3 + 0,048\ L\ (k_0 k)^{0,5}$
Keel plate	t = thickness of adjacent bottom plating

4.2.2 Topside structure

The topside structure scantlings are to be determined according to Pt B, Ch 5, Sec 4, [3], where the minimum net thickness is to be taken equal to $5(k_0 k)^{0,5}$ mm.

4.2.3 Primary supporting members

The design pressure of bottom primary supporting members is to be determined using $\gamma = 1$ for the draught coefficient.

5 Other structures

5.1 Sternpost

5.1.1 Irrespective of the range of navigation assigned to the vessel, the scantlings of the sternpost are not to be less than those determined according to requirements applicable to range of navigation **IN(1,2)**.

6 Hull outfitting

6.1 Rudder

6.1.1 Irrespective of the range of navigation assigned to the vessel, the rudder scantlings are not to be less than those determined according to the requirements applicable to range of navigation **IN(1,2)**.

7 Machinery

7.1 Propelling machinery

7.1.1 Propulsion systems under the bottom of the vessel are to be protected against damage by an effective structure around the propulsion system.

SECTION 8 PONTOONS

Symbols

k : Material factor defined in:
- Pt B, Ch 2, Sec 3, [2.3] for steel
- Pt B, Ch 2, Sec 3, [3.5] for aluminium alloys

k_0 : Coefficient to be taken equal to:
- k_0= 1 for steel
- k_0= 2,35 for aluminium alloys

L : Rule length, in m, defined in Pt B, Ch 1, Sec 2, [2]

t : Net thickness, in mm, of plating.

1 General

1.1 Application

1.1.1 Vessels complying with the requirements of this Section are eligible for the assignment of one of the service notations **Pontoon** and **Pontoon-crane** as defined in Pt A, Ch 1, Sec 3, [6.1.2].

Specific requirements which apply only to vessels with th service notation **Pontoon** or vessels with the service notation **Pontoon-crane** are indicated.

1.1.2 Vessels dealt with in this Section are to comply with the requirements stated under Part A, Part B and Part C of the Rules, as applicable, and with the requirements of this Section, which are specific to type and service notations **Pontoon** and **Pontoon-crane**.

1.1.3 Main characteristics of considered units

The requirements of this Section are based on the following assumptions:

- considered units are of normal structural configuration and proportions
- cargo is homogeneously distributed.

The scantlings of units with unusual shapes and dimensional proportions or carrying cargoes which are not homogeneously distributed, such as containers or heavy loads concentrated in limited areas, are to be considered by the Society on a case-by-case basis, taking into account the results of direct calculations, to be carried out according to Pt B, Ch 2, Sec 8, [2].

1.2 Documents to be submitted

1.2.1 In addition to the documentation requested in Pt B, Ch 1, Sec 3, the following documents are to be submitted to the Society:

- cargo load and distribution on the deck
- equipment weight and distribution.

1.2.2 Where wheeled vehicles are intended to be carried, a wheeled load arrangement plan, including the following details:

- type of vehicles
- axle load
- configuration and number of wheels per axle
- distance between axles
- distance between wheels
- tyre print area,

is also to be submitted to the Society.

2 Stability

2.1 General

2.1.1 The Society may waive the requirements of this Article depending on the vessel design and operating conditions.

2.1.2 The general requirements of Pt B, Ch 2, Sec 2 are to be complied with.

2.2 Documentation to be submitted

2.2.1 In addition to the documentation referred to in Pt B, Ch 2, Sec 2, [2.1], stability confirmation shall include the following data and documents:

a) scale drawings of the pontoon and working gear and the detailed data relating to these that are needed to confirm stability, such as content of the tanks, openings providing access to the inside of the vessel, etc.

b) hydrostatic data or curves

c) righting lever curves for static stability to the extent required in accordance with [2.4]

d) description of the operating conditions together with the corresponding data concerning weight and centre of gravity, including its unladen state and the equipment situation as regards transport

e) calculation of the heeling, trimming and righting moments, with specification of the list and trim angles and the corresponding residual freeboard and residual safety clearances

f) all of the results of the calculation with a specification of the use and load limits.

2.3 Heeling moments

2.3.1 Load induced moment

The load induced moment is to be defined by the Designer.

2.3.2 Asymmetric structure induced moment

The asymmetric structure induced moment is to be defined by the Designer.

2.3.3 Moment due to wind pressure

The moment caused by the wind pressure, in kN.m, shall be calculated in accordance with the following formula:

$M_W = c\ P_{WD}\ A_W\ (\ell_W + T / 2)$

where:

c : Shape-dependent coefficient of resistance taking account of gusts:
- for frameworks: c = 1,2
- for solid section beam: c = 1,6

P_{WD} : Wind pressure, in kN/m², defined in Pt B, Ch 3, Sec 4, [2.1.3]

A_W : Side surface area of the floating installation, in m²

ℓ_W : Distance, in m, of centre of gravity of area A_W, from waterline.

2.3.4 Cross current induced moment

The moment resulting from the cross current must only be taken into account for a vessel which is anchored or moored across the current while operating.

2.3.5 Ballast and supplies induced moment

The least favourable extent of tank filling from the point of view of stability shall be determined and the corresponding moment introduced into the calculation when calculating the moments resulting from the liquid ballast and the liquid provisions.

2.3.6 Moment due to inertia forces

The moment resulting from the inertia forces must be taken into account if the movements of the load and the working gear are likely to affect its stability.

2.3.7 Moment due to other mechanical equipment

The moment due to other mechanical equipment is to be defined by the Designer.

2.4 Calculation of the righting moments

2.4.1 The righting moments, in kN.m, for pontoons with vertical side walls may be calculated using the formula:

$Ma = 10\ \Delta\ GM \sin \varphi$

where:

GM : Metacentric height, in m

φ : List angle.

2.4.2 The formula in [2.4.1] shall apply up to list angles of 10° or up to a list angle corresponding to immersion of the edge of the deck or emergence of the edge of the bottom. In this instance the smallest angle shall be decisive. The formula may be applied to oblique side walls up to list angles of 5°.

If the particular shape of the vessel does not permit such simplification, the righting lever curves referred to in [2.2.1] item c) shall be required.

2.5 Intact stability

2.5.1 It shall be confirmed that, when account has been taken of the loads applied during the use and operation of the working gear, the residual freeboard defined in and the residual safety clearance defined in are adequate, i.e.:

- The residual safety clearance value is, at least:
  - 0,30 m for weathertight aperture
  - 0,40 m for unprotected openings.
- The residual freeboard value is at least 0,30 m.

  The residual freeboard may be reduced if it is proven that the requirements of [2.6] have been met.

For that purpose the list angle shall not exceed 10° and the base of the hull shall not emerge.

2.5.2 Stability checking shall take into account all the heeling moments defined in [2.3].

The moments which may act simultaneously shall be added up.

2.6 Intact stability in case of reduced residual freeboard

2.6.1 If a reduced residual freeboard is taken into account, it shall be checked, for all operating conditions, that:

a) after correction for the free surfaces of liquids, the metacentric height GM is not less than 0,15 m

b) for list angles between 0° and 30°, there is a righting lever, in m, of at least:

   $h = 0{,}30 - 0{,}28\ \varphi_n$

   where:

   φ_n : List angle, in radian, from which the righting lever arm curve displays negative values (stability limit); it may not be less than 20° or 0,35 rad and shall not be inserted into the formula for more than 30° or 0,52 rad:

   $20° \le \varphi_n \le 30°$

c) the list angle does not exceed 10°

d) the residual safety clearance value is, at least:
   - 0,30 m for weathertight openings
   - 0,40 m for unprotected openings

e) the residual freeboard is at least 0,05 m

f) for list angles between 0° and 30°, the residual righting lever arm, in m, is at least:

   $h = 0{,}20 - 0{,}23\ \varphi_n$

   where:

   φ_n : List angle, in radian, from which the righting lever arm curve displays negative values; this should not be inserted into the formula for more than 30° or 0,52 rad.

   Residual righting lever arm means the maximum difference existing between 0° and 30° list between the righting lever and the heeling lever curves. If an opening towards the inside of the vessel is immersed at a list angle less than the one corresponding to the maximum difference between the lever arm curves, the lever arm corresponding to that list angle shall be taken into account.

3 Structure design principles

3.1 Hull structure

3.1.1 Framing

In general, vessels with one of the service notations **Pontoon** and **Pontoon-crane** are to be longitudinally framed. Longitudinal stiffening members are to be supported by transverses arranged to form ring systems.

3.1.2 Supports for docking

Adequate supports are to be fitted on the longitudinal centreline in order to carry loads acting on the structure when the pontoons are in dry dock.

3.1.3 Truss arrangement supporting deck loads

Where truss arrangements may be used as supports of the deck loads, including top and bottom girders in association with pillars and diagonal bracing, the diagonal members are generally to have angles of inclination with respect to the horizontal of about 45° and cross-sectional area of about 50% that of the adjacent pillars.

3.2 Lifting appliances

3.2.1 Crane or derrick position during navigation

For vessels with the type and service notation **Pontoon-crane**, it is to be possible to lower the crane boom or the derrick structure and to secure them to the pontoon during the voyage.

4 Hull girder strength

4.1 Yielding check

4.1.1 Vessels less than 40 m in length lifted by crane

For vessels less than 40 m in length intended to be lifted on board ships by crane, the hull girder strength is to be checked, in the condition of fully-loaded vessel lifted by crane, through criteria to be agreed upon with the Society on a case-by-case basis.

4.1.2 Vessels with type and service notation Pontoon carrying special cargoes

For vessels with the type and service notation **Pontoon** intended for the carriage of special cargoes, such as containers or heavy loads concentrated in limited areas, the hull girder strength is to be checked through criteria to be agreed upon with the Society on a case-by-case basis.

4.1.3 Vessels with type and service notation Pontoon-crane

For vessels with the type and service notation **Pontoon-crane** having a length greater than or equal to 40 m, the hull girder strength is to be checked when the lifting appliance, such as a crane or derrick, is operated, taking into account the various loading conditions considered, through criteria to be agreed upon with the Society on a case-by-case basis.

5 Hull scantlings

5.1 General

5.1.1 The scantlings of the hull structure are to be determined in compliance with Part B, Chapter 5 and relevant Sections of Part B, Chapter 6, taking into account the following additional requirements.

5.1.2 Minimum net thickness of plating

The minimum thickness of the shell plating and deck plating are to be obtained from Tab 1.

Table 1 : Minimum net thickness t of plating

Plating	t, in mm
Decks, sides, bottom, bulkheads, web of primary supporting members, web of ordinary stiffeners and other structures	• for L ≤ 40 m: $t=3,3+0,048\ L(k_0k)^{0,5}$ • for L > 40 m: $t=4,8+0,019\ L(k_0k)^{0,5}$
Keel plate	t = thickness of adjacent bottom plating

5.1.3 Plating and stiffeners subjected to wheeled loads are to comply with Ch 1, Sec 5.

5.1.4 Primary supporting members

In the case of primary supporting members forming a grillage, the scantlings are to be determined by direct calculation as specified in Ch 1, Sec 4, [8].

5.2 Hull scantlings of vessels with type and service notation Pontoon-crane

5.2.1 Loads transmitted by the lifting appliances

The forces and moments transmitted by the lifting appliances to the vessel structures, during both lifting service and navigation, are to be obtained by means of criteria to be considered by the Society on a case-by-case basis.

5.2.2 Vessel structures

The vessel structures, subjected to the forces transmitted by the lifting appliances, are to be reinforced to the Society's satisfaction.

5.2.3 Lifting appliances

The check of the behaviour of the lifting appliances during operation is outside the scope of the classification and is under the responsibility of the Designer. However, where the requirements in [3.2.1] may not be complied with (i.e. sailing with boom or derrick up) or where, exceptionally, trips with suspended load are envisaged, the Designer is to submit the check of the lifting appliances during navigation to the Society for information.

5.3 Reinforcements

5.3.1 Reinforcements are to be provided at places where the hull is heavily stressed, as the securing points of the towing ropes.

SECTION 9 VESSELS FOR DREDGING ACTIVITIES

Symbols

a : Distance from the bottom to the sealing joint located at the lower part of the hopper well, in m

C : Wave parameter defined in Pt B, Ch 3, Sec 2

C_{FA} : Combination factor, to be taken equal to:
- C_{FA} = 0,7 for load case "c"
- C_{FA} = 1,0 for load case "d"

g : Gravitational acceleration:

$$g = 9,81 \text{ m/s}^2$$

h_0 : Distance, in m, from spoil level to base line in working conditions (see Fig 7)

h_4 : Distance, in m, from the lowest weir level to base line

M_H : Design still water bending moment in hogging condition, in kN.m, defined in Pt B, Ch 3, Sec 2, [2]

M_S : Design still water vertical bending moment in sagging condition, in kN.m, defined in Pt B, Ch 3, Sec 2, [2]

M_{WV} : Vertical wave bending moment, in kN.m, defined in Pt B, Ch 3, Sec 2, [3.2]

P_D : Maximum mass, in t, of the spoil contained in the hopper space

P_{WD} : Wind pressure, in kN/m², defined in Pt B, Ch 3, Sec 4, [2.1.3]

T_D : Maximum draught in working conditions, in m

T_4 : Navigation draught, in m, with well filled with water up to the lowest weir level.

V_D : Volume of the hopper space, in m³, limited to the highest weir level

δ : Density of the mixture of water and spoil, taken equal to:

$$\delta = \frac{P_D}{V_D}$$

γ_{W1} : Partial safety factor covering uncertainties regarding wave hull girder loads
- γ_{W1} = 1,0 for **IN**
- γ_{W1} = 1,15 for **IN(x ≤ 2)**

γ_{W2} : Partial safety factor covering uncertainties regarding wave local loads
- γ_{W2} = 1,0 for **IN**
- γ_{W2} = 1,2 for **IN(x ≤ 2)**

γ_W : Coefficient taken equal to:
- γ_W = 1,0 for **IN**
- γ_W = 0,625 for **IN(x ≤ 2)**

ℓ_p : Maximum length, in m, of the hopper well.

1 General

1.1 Application

1.1.1 Vessels complying with the requirements of this Section are eligible for the assignment of one of the following service notations, as defined in Pt A, Ch 1, Sec 3, [5.1.1] to Pt A, Ch 1, Sec 3, [5.1.5]:
- **Dredger**
- **Hopper dredger**
- **Hopper barge**
- **Split hopper dredger**
- **Split hopper barge**.

1.1.2 Vessels dealt with in this Section are to comply with the requirements stated in Part A, Part B and Part C of the Rules, as applicable, and with the requirements of this Section, which are specific to vessels for dredging activities.

1.1.3 Dredging equipment and installations are not covered by these Rules.

1.2 Documents to be submitted

1.2.1 In addition to the documentation requested in Pt B, Ch 1, Sec 3, the plans and documents listed in Tab 1 are to be submitted to the Society.

2 Stability for dredgers

2.1 General

2.1.1 The Society may waive the requirements of this Article depending on the vessel design and operating conditions

2.1.2 The general requirements of Pt B, Ch 2, Sec 2 are to be complied with.

2.2 Documentation to be submitted

2.2.1 In addition to the documentation referred to in Pt B, Ch 2, Sec 2, [2.1], stability confirmation shall include the following data and documents:

a) scale drawings of the pontoon and working gear and the detailed data relating to these that are needed to confirm stability, such as content of the tanks, openings providing access to the inside of the vessel, etc.

b) hydrostatic data or curves

c) righting lever curves for static stability to the extent required in accordance with [2.4]

d) description of the operating conditions together with the corresponding data concerning weight and centre of gravity, including its unladen state and the equipment situation as regards transport

e) calculation of the heeling, trimming and righting moments, with specification of the list and trim angles and the corresponding residual freeboard and residual safety clearances

f) all of the results of the calculation with a specification of the use and load limits.

2.3 Heeling moments

2.3.1 Load assumptions

Stability assessment is to be based at least on the following load assumptions:

a) Density of dredged material:
- sands and gravels: 1,5 t/m^3
- very wet sands: 2,0 t/m^3
- soil, on average: 1,8 t/m^3
- mixture of sand and water in the ducts: 1,3 t/m^3

b) Clamshell dredgers:
the values given in a) are to be increased by 15%

c) Hydraulic dredgers:
the maximum lifting power shall be considered.

2.3.2 Load induced moment

The load induced moment is to be defined by the Designer.

2.3.3 Asymmetric structure induced moment

The asymmetric structure induced moment is to be defined by the Designer.

2.3.4 Moment due to wind pressure

The moment caused by the wind pressure, in kN.m, shall be calculated in accordance with the following formula:

$M_W = c\, P_{WD}\, A_W\, (\ell_W + T / 2)$

where:

c : Shape-dependent coefficient of resistance taking account of gusts:
- for frameworks: c = 1,2
- for solid section beam: c = 1,6

A_W : Side surface area of the floating installation, in m^2

ℓ_W : Distance, in m, of centre of gravity of area A_W, from waterline.

2.3.5 Turning circle induced moment

For self-propelled vessels, the moment resulting from the turning of the vessel in kN.m, is to be determined by the following formula:

$$M_{dr} = \frac{0,0347 C_B v^2 \Delta}{L_{WL}} \left(KG - \frac{T}{2} \right)$$

Table 1 : Plans and documents to be submitted depending on type and service notations

Service notations	Plans or documents
Dredger	Transverse sections through hoppers, wells, pump rooms and dredging machinery spaces Structural arrangement of hoppers and supporting structures Closing arrangements, if any Connection of dredging machinery with the hull structure
Hopper dredger **Hopper barge**	Transverse sections through hoppers, wells, pump rooms and dredging machinery spaces Structural arrangement of hoppers and supporting structures including: • location, mass, fore and aft extent of the movable dredging equipment, for each loading condition • calculations of the horizontal forces acting on the suction pipe and on the gallows Closing arrangements, if any Connection of dredging machinery with the hull structure
Split hopper dredger **Split hopper barge**	Transverse sections through hoppers, wells, pump rooms and dredging machinery spaces Structural arrangement of hoppers and supporting structures, including: • location, mass, fore and aft extent of the movable dredging equipment, for each loading condition • calculations of the horizontal forces acting on the suction pipe and on the gallows Closing arrangements, if any Connection of dredging machinery with the hull structure Superstructure hinges and connections to the vessel structure, including mass and location of the superstructure centre of gravity Structure of hydraulic jack spaces Deck hinges, including location of centre of buoyancy and of centre of gravity of each half-hull, mass of equipped half-hull, half mass of spoil or water, supplies for each half-hull and mass of superstructures supported by each half-hull Hydraulic jacks and connections to vessel structure including operating pressure and maximum pressure of the hydraulic jacks (cylinder and rod sides) and corresponding forces Longitudinal chocks of bottom and deck Transverse chocks Hydraulic installation of jacks, with explanatory note

2.3.6 Cross current induced moment

The moment resulting from the cross current must only be taken into account for a vessel which is anchored or moored across the current while operating.

2.3.7 Ballast and supplies induced moment

The least favourable extent of tank filling from the point of view of stability shall be determined and the corresponding moment introduced into the calculation when calculating the moments resulting from the liquid ballast and the liquid provisions.

2.3.8 Moment due to inertia forces

The moment resulting from the inertia forces must be taken into account if the movements of the load and the working gear are likely to affect its stability.

2.3.9 Moment due to other mechanical equipment

The moment due to other mechanical equipment is to be defined by the Designer.

2.4 Calculation method

2.4.1 The calculation of the righting lever curves is to take into account the change of trim due to heel.

2.4.2 The righting moments, in kN.m, for floating installations with vertical side walls may be calculated via the formula:

$Ma = 10\ \Delta\ GM \sin \varphi$

where:

GM : Metacentric height, in m

φ : List angle.

2.4.3 The formula in [2.4.2] shall apply up to list angles of 10° or up to a list angle corresponding to immersion of the edge of the deck or emergence of the edge of the bottom. In this instance the smallest angle shall be decisive. The formula may be applied to oblique side walls up to list angles of 5°.

If the particular shape of the vessel does not permit such simplification the lever-effect curves referred to in [2.2.1] item c) shall be required.

2.5 Intact stability

2.5.1 It shall be confirmed that, when account has been taken of the loads applied during the use and operation of the working gear, the residual freeboard defined in Pt B, Ch 2, Sec 2, [1.2.4] and the residual safety clearance defined in Pt B, Ch 2, Sec 2, [1.2.6] are adequate, i.e.:

- The residual safety clearance value is, at least:
  - 0,30 m for weathertight aperture
  - 0,40 m for unprotected openings.
- The residual freeboard value is at least 0,30 m.

  The residual freeboard may be reduced if it is proven that the requirements of [2.6] have been met.

For that purpose the list angle shall not exceed 10° and the base of the hull shall not emerge.

2.5.2 Stability checking shall take into account the heeling moments defined in [2.3.2] to [2.3.9].

The moments which may act simultaneously shall be added up.

2.6 Intact stability in case of reduced residual freeboard

2.6.1 If a reduced residual freeboard is taken into account, it shall be checked, for all operating conditions, that:

a) after correction for the free surfaces of liquids, the metacentric height GM is not less than 0,15 m

b) for list angles between 0° and 30°, there is a righting lever, in m, of at least:

   $h = 0{,}30 - 0{,}28\ \varphi_n$

   where:

   φ_n : List angle, in radian, from which the righting lever arm curve displays negative values (stability limit); it may not be less than 20° or 0,35 rad and shall not be inserted into the formula for more than 30° or 0,52 rad:

   $20° \le \varphi_n \le 30°$

c) the list angle does not exceed 10°

d) the residual safety clearance value is, at least:
   - 0,30 m for weathertight openings
   - 0,40 m for unprotected openings

e) the residual freeboard is at least 0,05 m

f) for list angles between 0° and 30°, the residual righting lever arm, in m, is at least:

   $h = 0{,}20 - 0{,}23\ \varphi_n$

   where:

   φ_n : List angle, in radian, from which the righting lever arm curve displays negative values; this should not be inserted into the formula for more than 30° or 0,52 rad.

   Residual righting lever arm means the maximum difference existing between 0° and 30° list between the righting lever and the heeling lever curves. If an opening towards the inside of the vessel is immersed at a list angle less than the one corresponding to the maximum difference between the lever arm curves, the lever arm corresponding to that list angle shall be taken into account.

3 Stability for hopper dredgers and hopper barges Vessels without bottom doors

3.1 General

3.1.1 The Society may waive the requirements of this Article depending on the vessel design and operating conditions

3.1.2 The general requirements of Pt B, Ch 2, Sec 2 are to be complied with.

3.2 Documentation to be submitted

3.2.1 Stability confirmation shall include the following data and documents:

a) scale drawings of the vessel and the detailed data relating to these that are needed to confirm stability, such as content of the tanks, openings providing access to the inside of the vessel, etc.

b) hydrostatic data or curves

c) righting lever curves for static stability

d) description of the situations of use together with the corresponding data concerning weight and centre of gravity, including its unladen state and the equipment situation as regards transport

e) calculation of the list, trim and righting moments, with statement of the list and trim angles and the corresponding residual freeboard and residual safety clearances

f) all of the results of the calculation with a statement of the use and load limits.

3.3 Heeling moments

3.3.1 Load assumptions

Stability assessment is to be based at least on the following load assumptions:

a) Density of dredged material for dredgers:
- sands and gravels: 1,5 t/m³
- very wet sands: 2,0 t/m³
- soil, on average: 1,8 t/m³
- mixture of sand and water in the ducts: 1,3 t/m³

b) Clamshell dredgers:
the values given in a) are to be increased by 15%

c) Hydraulic dredgers:
the maximum lifting power shall be considered.

3.3.2 The moments which may act simultaneously shall be added up.

3.3.3 Load induced moment

The load induced moment is to be defined by the Designer.

3.3.4 Asymmetric structure induced moment

The asymmetric structure induced moment is to be defined by the Designer.

3.3.5 Moment due to wind pressure

The moment caused by the wind pressure, in kN.m, shall be calculated in accordance with the following formula:

$M_W = c\, P_{WD}\, A_W\, (\ell_W + T / 2)$

where:

c : Shape-dependent coefficient of resistance taking account of gusts:
- for frameworks:
  c = 1,2
- for solid section beam:
  c = 1,6

A_W : Side surface area of the floating installation, in m²

ℓ_W : Distance, in m, of centre of gravity of area A_W, from waterline.

3.3.6 Turning circle induced moment

For self-propelled vessels, the moment resulting from the turning of the vessel in t.m, is to be determined by the following formula:

$$M_{dr} = \frac{0,0347 C_B v^2 \Delta}{L_{WL}}\left(KG - \frac{T}{2}\right)$$

3.3.7 Cross current induced moment

The moment resulting from the cross current must only be taken into account for vessel which is anchored or moored across the current while operating.

3.3.8 Ballast and supplies induced moment

The least favourable extent of tank filling on stability shall be determined and the corresponding moment introduced into the calculation when calculating the moments resulting from the liquid ballast and the liquid provisions.

3.3.9 Moment due to inertia forces

The moment resulting from the inertia forces must be taken into account if the movements of the load and the working gear are likely to affect its stability.

3.3.10 Moment due to other mechanical equipment

The moment due to other mechanical equipment is to be defined by the Designer.

3.4 Calculation method

3.4.1 The calculation of the righting lever curves is to take into account:

- the change of trim due to heel
- the inflow of river water or outflow of liquid cargo at the upper edge of the hopper coaming in the case of an open hopper
- the inflow of water at the lower edge of the overflow, located at cargo level or at the lowest possible position above cargo level, or at the lower edge of the lowest overflow ports or spillways.

3.5 Intact stability

3.5.1 It shall be confirmed that, when account has been taken of the loads applied during the use and operation of the working gear, the residual freeboard defined in Pt B, Ch 2, Sec 2, [1.2.4] and the residual safety clearance defined in Pt B, Ch 2, Sec 2, [1.2.6] are adequate, i.e.:

- The residual safety clearance value is, at least:
  - 0,30 m for weathertight aperture
  - 0,40 m for unprotected openings.
- The residual freeboard value is at least 0,30 m.
  The residual freeboard may be reduced if it is proven that the requirements of [3.6] have been met.

For that purpose the list angle shall not exceed 10° and the base of the hull shall not emerge.

3.5.2 Stability checking shall take into account the heeling moments defined in [3.3.3] to [3.3.10].

The moments which may act simultaneously shall be added up.

3.6 Intact stability in case of reduced residual freeboard

3.6.1 If a reduced residual freeboard is taken into account, it shall be checked, for all operating conditions, that:

a) after correction for the free surfaces of liquids, the metacentric height GM is not less than 0,15 m

b) for list angles between 0° and 30°, there is a righting lever, in m, of at least:

$h = 0,30 - 0,28\ \varphi_n$

where:

φ_n : List angle, in radian, from which the righting lever arm curve displays negative values (stability limit); it may not be less than 20° or 0,35 rad and shall not be inserted into the formula for more than 30° or 0,52 rad:

$20° \leq \varphi_n \leq 30°$

c) the list angle does not exceed 10°

d) the residual safety clearance value is, at least:
- 0,30 m for weathertight openings
- 0,40 m for unprotected openings

e) the residual freeboard is at least 0,05 m

f) for list angles between 0° and 30°, the residual righting lever arm, in m, is at least:

$h = 0,20 - 0,23\ \varphi_n$

where:

φ_n : List angle, in radian, from which the righting lever arm curve displays negative values; this should not be inserted into the formula for more than 30° or 0,52 rad.

Residual righting lever arm means the maximum difference existing between 0° and 30° list between the righting lever and the heeling lever curves. If an opening towards the inside of the vessel is immersed at a list angle less than the one corresponding to the maximum difference between the lever arm curves, the lever arm corresponding to that list angle shall be taken into account.

4 Stability for hopper dredgers and hopper barges Vessels fitted with bottom doors

4.1 General

4.1.1 The Society may waive the requirements of this Article depending on the vessel design and operating conditions

4.1.2 The general requirements of Pt B, Ch 2, Sec 2 are to be complied with.

4.2 Documentation to be submitted

4.2.1 Stability confirmation shall include the following data and documents:

a) scale drawings of the vessel and the detailed data relating to these that are needed to confirm stability, such as content of the tanks, openings providing access to the inside of the vessel, etc.

b) hydrostatic data or curves

c) righting lever curves for static stability

d) description of the situations of use together with the corresponding data concerning weight and centre of gravity, including its unladen state and the equipment situation as regards transport

e) calculation of the list, trim and righting moments, with statement of the list and trim angles and the corresponding residual freeboard and residual safety clearances

f) all of the results of the calculation with a statement of the use and load limits.

4.3 Heeling moments

4.3.1 The heeling moments are to be calculated in compliance with [3.3]. The moments which may act simultaneously shall be added up.

4.4 Calculation method

4.4.1 The calculation of the righting lever curves is to take into account:

- the change of trim due to heel
- the inflow of river water or outflow of liquid cargo at the upper edge of the hopper coaming in the case of an open hopper
- the inflow of water at the lower edge of the overflow, located at cargo level or at the lowest possible position above cargo level, or at the lower edge of the lowest overflow ports or spillways.

4.5 Intact stability

4.5.1 The intact stability of the vessel is to be sufficient to comply with the criteria indicated in [3.5] and [4.5.2] for all intended operational loading conditions.

4.5.2 Using the calculation method given in [4.4], vessels with bottom doors or similar means at port side and at starboard side are to comply with the following criteria considering an asymmetric discharging:

- the angle of equilibrium is not to exceed 27°
- the righting lever GZ within the 30° range beyond the angle of equilibrium is to be at least 0,10 m
- the range of stability is not to be less than 30°.

The dredger is assumed loaded up to the dredging draught with solid cargo of a density defined in [3.3.1], when discharging, 20% of the total hopper load is assumed to be discharged only at one side of the longitudinal centreline of the hopper, horizontally equally distributed at the discharging side.

5 Structure design principles

5.1 General

5.1.1 The attention of Designers is drawn to the fact that the structural arrangement of vessels for dredging activities involves discontinuities and that particular care is to be taken to avoid cracks or fractures.

5.1.2 Where dredgers are likely to work in association with hopper barges, the sheerstrake is to be protected, slightly below the deck, by a fender efficiently secured to the shell plating and extending over at least two thirds of the vessel length. Compensation is to be provided in way of the gangway port in raised deck, if fitted.

5.1.3 Where dredgers are likely to work in association with hopper barges, the shell plating is to be protected by a fender extending from the load waterline to the lowest waterline.

Additional structural reinforcements are to be provided in way of fenders and submitted to the Society for approval.

5.1.4 On bucket dredgers, in order to prevent dangerous flooding in the event of damage to the shell plating by metal debris (e.g. anchors), a watertight compartment is to be provided at the lower part of the caissons on either side of the bucket well in the area of the buckets. The compartment is to be of adequate size to allow surveys to be carried out.

5.1.5 Reinforcements are to be provided at locations where the hull is heavily stressed, such as:

- beneath the suction pipe gallows
- in way of the gallow frame on bucket dredgers
- at the points where tow ropes are secured
- at connections of piles, etc.

5.1.6 The strengthening of the flat bottom at the ends is to be examined by the Society on a case-by-case basis.

5.1.7 Weirs are to be provided in the hopper spaces. Their sectional area is to be large enough, taking into account the density of the water-spoil mixture to be drained off.

The disposition and location of the weirs are to be such that:

- they prevent the maximum authorised draught from being exceeded during loading
- draining off is made without any overflowing on the decks.

5.1.8 The corners of the cut-outs in the bottom plating are to be rounded and the radius is to be as large as possible, especially near the bottom doors.

The shape and the radius of cut-out corners are to be in accordance with Pt B, Ch 6, Sec 7.

5.2 Longitudinal members in the area of the hopper well

5.2.1 The scantlings of the midship region are generally to be kept over the full length of the hopper well.

5.2.2 Attention is to be paid to the structural continuity of longitudinal members, especially coaming and hopper well bulkheads.

5.2.3 The upper deck stringer plate is to extend to the inner side over the full length of the hopper well.

5.2.4 The fore and aft ends of the inner side of the hopper spaces are to be extended by large brackets generally having a length and a width equal to D/4. It is recommended that a swept shape should be provided for these brackets (see Fig 1).

The upper bracket is to be welded to the deck and extended by a longitudinal deck girder.

The lower bracket, which is generally oblique, is to be welded to the bottom or to the tank top. In the latter case, the lower bracket is to be extended inside the double bottom by means of a solid keelson extending at least over three frame spaces beyond the end of the bracket.

5.2.5 The fore and aft ends of the centreline cellular keel are to be extended by means of brackets having a length at least equal to the depth of this keel.

In areas where a double bottom is provided, the brackets may be arranged in accordance with Fig 2.

5.2.6 The vertical sides of the trunks are to be extended beyond the end of the hopper spaces over a distance of at least 1,5 times their height.

5.2.7 The Society may, on a case-by-case basis, require that longitudinal members of the double bottom structure are extended, by means of brackets, inside the side compartments bounding the hopper spaces.

5.2.8 Arrangements other than those described in [5.2.4] to [5.2.7] are to be considered by the Society on a case-by-case basis.

Figure 1 : Brackets at fore and aft ends of longitudinal bulkheads of the hopper spaces

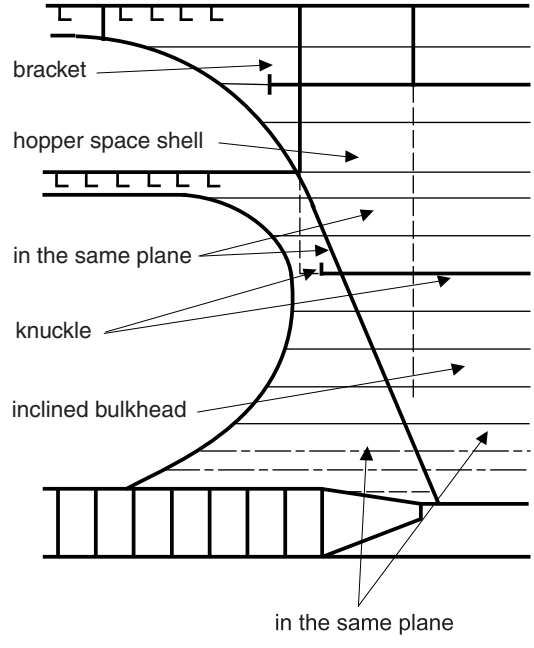

Figure 2 : Brackets at fore and aft ends of cellular keel

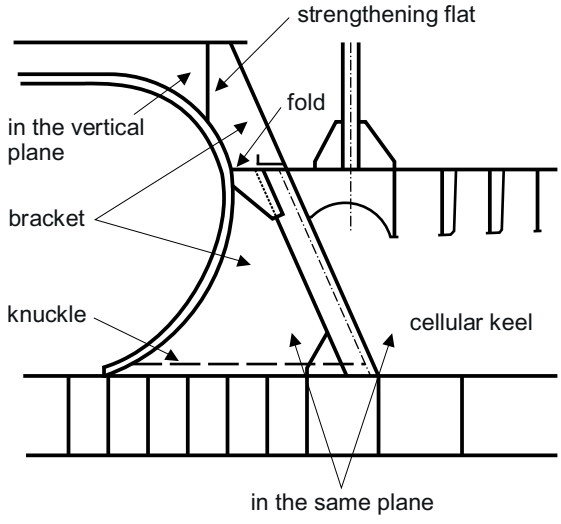

5.3 Transverse members in the area of the hopper well

5.3.1 Transverse primary supporting rings

Within the hopper well area, transverse primary supporting rings are to be provided and are to involve:

- deep floors inside hopper spaces
- side vertical primary supporting members
- hopper well vertical primary supporting members
- strong beams inside hopper spaces, at deck or trunk level
- where necessary, cross-ties connecting either the side vertical primary supporting members to the hopper well vertical primary supporting members or the floor to the hopper well vertical primary supporting members.

The spacing of the transverse rings is generally to be taken not greater than five frame spaces.

5.3.2 The cellular keel is to be rigidly connected to the transverse rings required in [5.3.1].

5.3.3 The upper part of the cellular keel may be connected to the deck or trunk structure by means of axial or inclined pillars in association with strong beams, or by a centreline wash bulkhead.

5.3.4 The connection of hopper space floors with the longitudinal bulkheads and the cellular keel is to be arranged such that the continuity of the strength is ensured.

Where the floor is made of a box with sloping sides, particular attention is to be paid to the continuity of the lower flange. Fig 3 shows an example of possible connection.

5.3.5 The connection between the flanges of the strong beams and the adjacent structure is generally to be made by means of brackets having the thickness of these flanges and extending inside the adjacent structure.

5.4 Arrangements relating to suction pipes

5.4.1 Where a cut-out is necessary in the side shell plating to fit the suction pipe guides, continuity of members is to be restored, for example by means of knuckled plates as thick as the side shell plating and with a knuckle angle as small as possible.

The knuckles are to be stiffened by reinforced vertical primary supporting members and intercostal girders of the same web height (see Fig 4 and Fig 5).

The fillet welding between the web of vertical primary supporting members and the knuckled plates is not to be made onto the knuckles, but about 50 mm apart.

Figure 3 : Example of connection with floor made of box with sloping sides

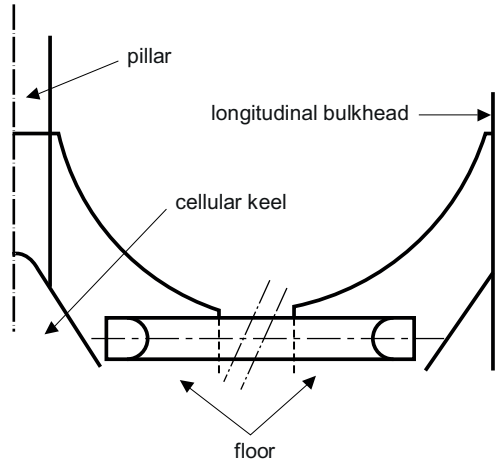

Figure 4 : Transversely framed side Cut-out reinforced by means of knuckled plate

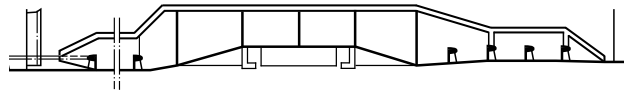

Figure 5 : Longitudinally framed side Cut-out reinforced by means of knuckled plate

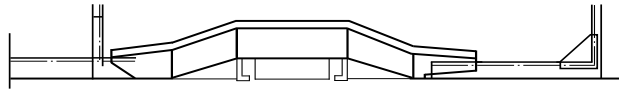

5.4.2 The suction pipe guides are to be fitted as far as possible from the hopper space ends or from any cut-out in the bottom or deck plating.

A 60% reinforced deck plate, not exceeding 38 mm, is to be provided in way of the cut-out of the guides. This plate is to extend over at least one frame space forward and aft of the vertical primary supporting members provided for in [5.4.1].

5.4.3 In areas where, during suction pipe operations, the drag head and the joint may run against the hull, one or several of the following arrangements are generally to be provided:

- thickness plating in excess of thickness obtained according to Pt B, Ch 5, Sec 2 and Pt B, Ch 5, Sec 3 for bilge and side shell

- reinforcement of the structure by means of vertical primary supporting members, girders, intermediate frames or longitudinals, depending on the construction type
- fenders to be provided outside the hull; these fenders together with the bilge shape are not to impede the suction pipe operation
- cofferdam to be provided to limit the possible flooding of side compartments.

5.4.4 The suction pipes are generally to be fitted with:

- auxiliary devices able to lift the suction pipe, in addition to the suction pipe davits
- a sufficient number of attachment points on the suction pipe itself, to facilitate handling
- a load limiting device to avoid any overload, if the suction pipe is equipped with cutting teeth
- accessories fitted onto the suction pipe built in several parts to facilitate partial replacements in case of damage.

5.5 Chafing areas

5.5.1 Some parts of the structure subjected to heavy wear, such as inner sides of hopper spaces, may be protected or reinforced to avoid frequent replacement.

5.5.2 If protection is provided by means of removable plates, called chafing plates, attention is to be paid to avoid corrosion between the facing sides of these plates and the hopper space plating.

5.5.3 If reinforcement is made by increasing the thickness, the section moduli may be determined taking into account the extra thickness, provided that the chafing limits, beyond which the plates are to be replaced, are determined according to the extra thickness values.

If this extra thickness is disregarded in the section moduli calculation, this is to be clearly indicated on the midship section drawing.

5.6 Reinforcements for grounding

5.6.1 If grounding is considered for normal operation of the vessel, the bottom plating and the bottom structure are to be reinforced as indicated in [5.6.2] to [5.6.5].

5.6.2 Along the full length of the vessel, in the area of flat bottoms, the bottom net thickness obtained according to Pt B, Ch 5, Sec 2, as applicable, is to be increased by 2,5 mm.

5.6.3 Where the vessel has a transversely framed double bottom, floors are to be fitted at each frame space and associated with intercostal longitudinal girders, the mean spacing of which is to be not greater than 2,10 m.

Moreover, intercostal longitudinal ordinary stiffeners located at mid-spacing of bottom girders are to be provided.

5.6.4 Where the vessel has a longitudinally framed double bottom, the floor spacing may not exceed three frame spaces and the bottom girder spacing may not exceed three longitudinal ordinary stiffener spaces.

Intercostal transverse stiffeners are to be provided at mid-span of longitudinal ordinary stiffeners.

Floors are to be stiffened by vertical stiffeners having the same spacing as the longitudinal ordinary stiffeners.

5.6.5 Where the vessel is built with open hopper spaces (bottom doors provided on the bottom), reinforcements as required in [5.6.3] or [5.6.4] are to be provided within the side compartments, the cellular keel and, in general, within the limits of the flat bottom area.

5.7 Bolted structures

5.7.1 Where the dredger is made of several independent members connected by bolting, the connection is to be examined by the Society on a case-by-case basis.

6 Design loads

6.1 External pressure

6.1.1 Still water pressure

The river still water pressure to be used in connection with the wave pressure is to be determined in compliance with Pt B, Ch 3, Sec 4, [2.1.1], using the values of draught T_1 given in Tab 2.

Table 2 : Draught T_1

Load case	Loading condition	T_1	
		River counter pressure	River design pressure
Working	**1R** and **Nonhomload**	0,20D	T
	2R	0,575T	0,575T
Navigation	Full load	T	T
	Lightship	0,20D	0,20D

6.1.2 River wave pressure

The river wave pressure is to be obtained from Pt B, Ch 3, Sec 4, [2.1.2].

6.2 Internal pressure for hopper well

6.2.1 Still water pressure for hopper well

The still water pressure to be used in connection with the inertial pressure in [6.2.2] is to be obtained, in kN/m², from the following formula:

$p_S = g\,\delta_1\,d_D$, to be taken not less than 11,0

where:

δ_1 : Coefficient equal to:

$\delta_1 = \delta$ for $\delta < 1{,}4$

$\delta_1 = \delta + (1{,}4 - \delta)\sin^2\alpha$ for $\delta \geq 1{,}4$

d_D : Vertical distance, in m, from the calculation point to the highest weir level with the corresponding specific gravity of the mixture of sea water and spoil

α : Angle, in degrees, between the horizontal plane and the surface of the hull structure to which the calculation point belongs.

6.2.2 Inertial pressure for hopper well

The inertial pressure is to be obtained from Tab 3.

Table 3 : Vessels for dredging activities Inertial pressure for hopper well

Ship condition	Load case	Inertial pressure p_W, in kN/m²
Upright condition	"a"	No inertial pressure
	"b"	$\gamma_{W2}\frac{p_S}{g}\sqrt{a_{X1}^2 + a_{Z1}^2}$
Inclined condition	"c" and "d"	$C_{FA}\gamma_{W2}\frac{p_S}{g}\sqrt{a_{Y2}^2 + a_{Z2}^2}$
Note 1: The accelerations a_{X1}, a_{Z1}, a_{Y2} and a_{Z2} are to be determined according to Pt B, Ch 3, Sec 3, [2.3], considering the ship in dredging situation, i.e. considering the draught equal to the dredging draught T_D.		

6.3 Hull girder loads for dredgers, hopper dredgers and hopper barges

6.3.1 The total vertical bending moments M_{TH} and M_{TS}, in kN·m, to be applied in navigation and working conditions are to be determined as specified in Tab 4.

Table 4 : Total vertical bending moments

Condition	In general	H.G.yielding & buckling and ultimate strength of stiffeners and stiffened panels
Hogging	$M_{TH} = M_H + \gamma_W\gamma_{W1} M_{WV}$	$M_{TH} = M_H + M_{WV}$
Sagging	$M_{TS} = M_S + \gamma_W \gamma_{W1}M_{WV}$	$M_{TS} = M_S + M_{WV}$

6.4 Hull girder loads for split hopper dredgers and split hopper barges

6.4.1 Application

The provisions in [6.4.2] to [6.4.6] apply.

6.4.2 General

Horizontal bending moments are to be calculated assuming that the hopper well is simply supported at each end.

The clearance between the two half-hulls is to be large enough not to be suppressed when the hopper well is full up.

However, the calculation of the horizontal moments is carried out assuming that both ends of the hopper well are partly clamped, on condition that at deck and bottom level chocks are provided forward and aft of the well so that:

- the clearance between the two half-hulls is nil
- the chocks are long enough to withstand the end moments due to the horizontal forces developed along the hopper well.

6.4.3 The total vertical bending moments M_{TH} and M_{TS}, in kN·m, to be applied on one half-hull in navigation and working conditions are to be determined as specified in Tab 5.

Table 5 : Total vertical bending moments applied on half-hulls

Condition	In general	H.G. yielding & buckling and ultimate strength of stiffeners and stiffened panels
Hogging	$M_{TH} = \frac{M_H + \gamma_W\gamma_{W1}M_{WV}}{2}$	$M_{TH} = \frac{M_H + M_{WV}}{2}$
Sagging	$M_{TS} = \frac{M_S + \gamma_W\gamma_{W1}M_{WV}}{2}$	$M_{TS} = \frac{M_S + M_{WV}}{2}$

6.4.4 Horizontal still water bending moments

The horizontal still water bending moment M_{SHH} to be applied on one half-hull in navigation and working conditions are to be obtained, in kN.m, from the formulae given in Tab 6, assuming that the hopper well is simply supported at each end.

If the hopper well may not be considered as simply supported at each end, the horizontal still water bending moments to be applied on one half-hull in navigation and working conditions are to be determined on a case-by-case basis.

Table 6 : Horizontal still water bending moment M_{SHH} applied on half-hulls

Hopper well mid-section	Hopper well ends
$-\left(\frac{1}{8} + \frac{c_1}{2\ell_p}\right)p\ell_p^2$	0
Note 1: Between hopper well mid-section and ends, the values of the horizontal still water bending moment are to be obtained by linear interpolation. **Note 2:** p : Load per metre, in kN/m, applied along the hopper well, defined in Tab 7 depending on the loading condition c_1 : Distance, in m, from deck hinges to ends of hopper well (see Fig 6).	

Figure 6 : Definitions of dimensions in hopper well area

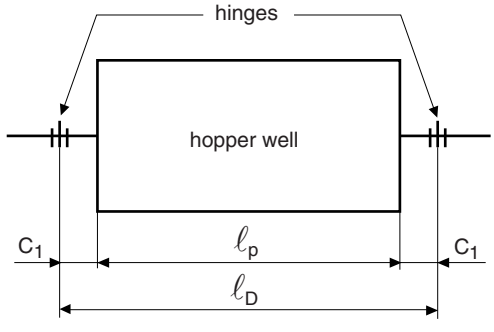

Table 7 : Load per metre applied along the hopper well

Loading condition	Load per metre p, in kN/m
Maximum loading at working draught	$4,9\ [\rho\ (h_0 - a)^2 - (T_D - a)^2]$
Service condition with well filled with water up to the waterline	0
Service condition with well filled with water up to the lowest weir level	$4,9\ [(h_4 - a)^2 - (T_4 - a)^2]$
Note 1: h_4 : Distance, in m, from the lowest weir level to base line T_4 : Navigation draught, in m, with well filled with water up to the lowest weir level a, h_0, T_D : Distances, in m, defined in Fig 7.	

6.4.5 Horizontal wave bending moments

The horizontal wave bending moment M_{WHH} to be applied on one half-hull in navigation and working conditions are to be obtained, in kN.m, from the formulae given in Tab 8, assuming that the hopper well is simply supported at each end.

If the hopper well may not be considered as simply supported at each end, the horizontal still water bending moments to be applied on one half-hull in navigation and working conditions are to be determined on a case by case basis.

Figure 7 : Definitions of distances for calculation of the load applied along the hopper well

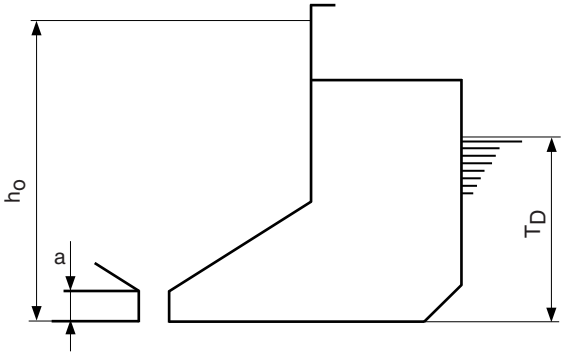

Table 8 : Horizontal wave bending moment M_{WHH} applied on half-hulls

Hopper well mid-section	Hopper well ends
Navigation: $\left[T_4 + 0,077C\left(2\frac{\ell_D}{L} - 1\right)(C_B + 0,7)\right]\frac{M_{WV}}{B}$	0
Working: $\left[T_D + 0,077C\left(2\frac{\ell_D}{L} - 1\right)(C_B + 0,7)\right]\frac{M_{WV}}{B}$	
Note 1: Between hopper well mid-section and ends, the values of the horizontal wave bending moment is to be obtained by linear interpolation. **Note 2:** C_B : Block coefficient, defined in Pt B, Ch 1, Sec 2, [2]	

6.4.6 Total horizontal bending moment

The total horizontal bending moment M_{HH} applied on half-hull at hopper well mid-section and at hopper well ends, in navigation and working conditions, is to be obtained, in kN.m, from the following formulae:

- in general:

  $M_{HH} = M_{SHH} + \gamma_W\ \gamma_{W1} M_{WHH}$
- for hull girder yielding check according to Pt B, Ch 4, Sec 1, [4] and buckling and ultimate strength of stiffeners and stiffened panels according to Pt B, Ch 2, Sec 7:

  $M_{HH} = M_{SHH} + M_{WHH}$

where:

M_{SHH} : Horizontal still water bending moment, defined in [6.4.4] at hopper well mid-section and at hopper well ends, in navigation and working conditions

M_{WHH} : Horizontal wave bending moment, defined in [6.4.5] at hopper well mid-section and at hopper well ends, in navigation and working conditions

7 Hull girder strength of dredgers, hopper dredgers and hopper barges

7.1 General

7.1.1 The hull girder strength is to be checked for the navigation and working conditions according to the criteria of Pt B, Ch 4, Sec 2.

7.2 Midship section modulus

7.2.1 In the determination of the midship section modulus according to Pt B, Ch 4, Sec 1, account is to be taken of 85% and 100% effectiveness of the sectional area of the cellular keel.

However the 85% and 100% effectiveness of the sectional area of the cellular keel may be replaced by the actual effectiveness of the cellular keel determined by a three dimensional finite element analysis.

7.2.2 Where cut-outs in the side shell are needed to fit the suction pipe guides, a section modulus calculation not taking account of the side shell plating may be required by the Society on a case-by-case basis, if the structural continuity is not correctly achieved.

8 Hull girder strength of split hopper dredgers and split hopper barges

8.1 General

8.1.1 The yielding check is to be carried out for the navigation and working conditions according to [8.2] to [8.4], considering:

- each half-hull as being subjected to independent bending
- the deck hinges and the hydraulic jacks acting as supports at the ends of the hopper well.

Both the vertical bending moment and horizontal bending moment acting within the well area are to be taken into account.

8.1.2 The hull section modulus, considered with the two half-hulls connected, is to be checked for the navigation and working conditions according to the criteria of Pt B, Ch 4, Sec 2. See also [7.2] for the determination of the midship section modulus.

8.2 Definitions

8.2.1 Co-ordinate system

The hull girder strength is defined with reference to the following co-ordinate system, as shown in Fig 8.

G : Centre of gravity of the transverse section

GY : Transverse axis, parallel to Y defined in Pt B, Ch 1, Sec 2, [3.1.1] and crossing through G

GZ : Vertical axis, parallel to Z defined in Pt B, Ch 1, Sec 2, [3.1.1] and crossing through G

Gy, Gz : Main axes of the transverse section, defined in [8.2.2].

Figure 8 : Half-hull co-ordinate system

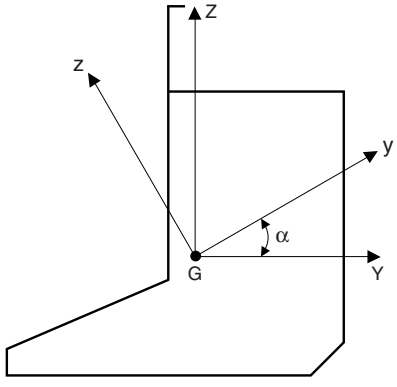

8.2.2 Main axes

The main axes Gy and Gz are obtained from the axes GY and GZ by a rotation around the centre of gravity G of an angle α obtained from the following formula:

$$\alpha = \frac{1}{2}\operatorname{atan}\left(\frac{2 I_{YZ}}{I_Z - I_Y}\right)$$

where:

I_Y : Moment of inertia, in cm^4, of the transverse section around the axis GY

I_Z : Moment of inertia, in cm^4, of the transverse section around the axis GZ

I_{YZ} : Inertia product, in cm^4, of the transverse section, in the reference (G, GY, GZ).

8.2.3 Bending moments

The bending moments M_y and M_z in relation to the main axes Gy and Gz, respectively, are to be obtained, in kN.m, from the following formulae:

$$M_y = M_V \cos\alpha + M_{HH} \sin\alpha$$

$$M_z = -M_V \sin\alpha + M_{HH} \cos\alpha$$

where:

M_V : Vertical bending moment defined in [6.4.3], in kN.m, to be considered in hogging (M_{TH}) and sagging (M_{TS}) conditions, for the navigation and working conditions

M_{HH} : Horizontal bending moment defined in [6.4.6], in kN.m, to be considered for the navigation and working conditions

α : Angle defined in [8.2.2].

As the main inertia axes of each half-hull are oblique, the bending of each half-hull is a deviated bending.

8.3 Hull girder stress

8.3.1 At any point of the transverse section of each half-hull, the hull girder normal stresses are to be obtained, in N/mm^2, from the following formula:

$$\sigma_1 = \left(z\frac{M_y}{I_{yM}} - y\frac{M_z}{I_{zM}}\right)10^5$$

where:

M_y, M_z : Bending moments, in kN.m, in hogging and sagging conditions, for the navigation and working conditions, defined in [8.2.3]

I_{yM}, I_{zM} : Moments of inertia, in cm^4, of the transverse section around its main axes

y, z : Coordinates, in m, of the calculation point with respect to the main axes G_y and G_z.

8.3.2 In the case of partly clamped ends of the hopper well (see [6.4.2]), the hull girder normal stresses are to be calculated in the hopper well mid-section and at hopper well ends.

In this case, the stresses are also to be calculated in the midship area assuming the ends supported as regards the horizontal moment. This calculation relates to the beginning of the hopper well drainage by opening of the two half-hulls.

8.3.3 In the case of supports at hopper well ends, the calculation of the hull girder normal stress is to be carried out in the hopper well mid-section.

8.3.4 For each section of calculation, the most unfavourable combination of moments is to be considered.

8.4 Checking criteria

8.4.1 It is to be checked that the normal stresses calculated according to [8.3.1] are in compliance with the criteria of Pt B, Ch 4, Sec 2.

9 Hull scantlings

9.1 General

9.1.1 Hull scantlings are to be checked according to the applicable requirements of Ch 1, Sec 2 or Ch 1, Sec 8, as applicable, for the following two conditions:

- navigation condition
- working condition.

For vessels with one of the type and service notations **split hopper dredger** or **split hopper barge**, the hull girder normal stresses to be used are defined in [9.2].

9.2 Hull girder normal stress for split hopper dredgers and split hopper barges

9.2.1 Strength check of plating and yielding check of ordinary stiffeners and primary supporting members

The hull girder normal stress σ_{X1} to be considered for the strength check of plating, for the yielding check of ordinary stiffeners and for the yielding check of primary supporting members analysed through an isolated beam structural model is to be obtained, in N/mm², from Tab 9 (see [8.2] for the definitions).

Table 9 : Hull girder normal stress for hull scantlings

Structural element	Normal stress σ_{X1}, in N/mm²
Plating and structural members contributing to the hull girder longitudinal strength	$\left(z\frac{M_y}{I_{yM}} - y\frac{M_z}{I_{zM}}\right)10^5$
Plating and structural members not contributing to the hull girder longitudinal strength	0

9.2.2 Buckling check of plating, ordinary stiffeners and primary supporting members

The hull girder normal stress σ_{X1} to be considered for the buckling check of plating, for the buckling check of ordinary stiffeners and for the buckling check of plate panels constituting primary supporting members is to be taken as the maximum compressive stress obtained according to [9.2.1].

9.3 Bottom plating

9.3.1 Where the bottom is longitudinally framed and the bilge is made of a transversely framed sloped plate, the bottom is to be assumed as being transversely framed when calculating the plating thickness.

9.3.2 The net thickness of the bottom strake, to which the longitudinal bulkheads of the hopper space are connected, is to be not less than the greater of the following thicknesses:

- bottom plating thickness increased by 15%
- keel thickness.

9.4 Well bulkhead and cellular keel platings

9.4.1 The net thickness of hopper well bulkhead plating and cellular keel plating is to be not less than the net thickness obtained:

- in the working condition, considering the internal pressures defined in [6.2]
- in the navigation condition, where the hopper well bulkheads limit tank compartments, considering the internal pressures defined in Pt B, Ch 3, Sec 4.

9.4.2 The net thickness of the longitudinal bulkhead above the deck or within 0,1 D below the deck is to be not less than the net thickness of the strength deck abreast of the hatchways.

9.4.3 The net thickness of the transverse and longitudinal bulkhead of a dredge pipe well is to be determined as for the side shell net thickness.

9.5 Transverse rings

9.5.1 The scantlings of transverse rings are to be obtained from a direct calculation, according to Pt B, Ch 2, Sec 5, taking into account the following:

- floors or bottom transverses are simply supported at ends
- local discontinuities in strength, due to the presence of wells, are to be considered.

9.5.2 The gusset stays for coamings are to have a section modulus at the lower end level not less than the one of the web frames or side transverses.

10 Additional checking for hopper dredgers and hopper barges

10.1 hopper well structure

10.1.1 The check of hopper well structure of hopper dredgers and hopper barges is to be carried out according to applicable Society's Rules.

11 Additional checking for split hopper dredgers and split hopper barges

11.1 Superstructure hinges

11.1.1 The check of superstructure hinges is to be carried out according to applicable Society's Rules.

11.2 Deck hinges, hydraulic jack connections and chocks

11.2.1 Arrangements and scantlings of the deck hinges and the hydraulic jack attachments connecting the two half-hulls are to be in compliance with applicable Society's Rules.

11.3 Hydraulic jacks and associated piping systems

11.3.1 Arrangements and checks of hydraulic jacks and associated piping systems are to be in compliance with applicable Society's Rules.

12 Rudders

12.1 General

12.1.1 The rudder stock diameter obtained from Pt B, Ch 7, Sec 1 is to be increased by 5%.

12.2 Additional requirements for split hopper dredgers and split hopper barges

12.2.1 Each half-hull of vessels with one of the type and service notations **split hopper barge** or **split hopper dredger** is to be fitted with a rudder complying with the requirements of Pt B, Ch 7, Sec 1.

12.2.2 An automatic system for synchronising the movement of both rudders is to be fitted.

SECTION 10 LAUNCHES

Symbols

k : Material factor defined in:
- Pt B, Ch 2, Sec 3, [2.3] for steel
- Pt B, Ch 2, Sec 3, [3.5] for aluminium alloys

k_0 : Coefficient to be taken equal to:
- k_0= 1 for steel
- k_0= 2,35 for aluminium alloys

L : Rule length, in m, defined in Pt B, Ch 1, Sec 2, [2]

t : Net thickness, in mm, of plating.

1 General

1.1 Application

1.1.1 Vessels complying with the requirements of this Section are eligible for the assignment of the service notation **Launch**, as defined in Pt A, Ch 1, Sec 3, [6.1.1].

1.1.2 Vessels dealt with in this Section are to comply with the requirements stated under Part A, Part B and Part C of the Rules, as applicable, and with the requirements of this Section, which are specific to launches.

2 Stability

2.1 General

2.1.1 Proof of sufficient intact stability according to Pt B, Ch 2, Sec 2 is to be furnished.

The Society may waive this requirement, depending on the vessel design and operating conditions.

3 Hull scantlings

3.1 General

3.1.1 The scantlings of the hull structure are to be determined in compliance with Part B, Chapter 5 and relevant Sections of Part B, Chapter 6, taking into account additional requirements defined in [3.2].

3.2 Additional requirements

3.2.1 Minimum net thickness of plating

The minimum thickness of the shell plating and deck plating are to be obtained from Tab 1.

3.2.2 Topside structure

The topside structure scantlings are to be determined according to Pt B, Ch 5, Sec 4, [3], where the minimum net thickness, in mm, is to be taken equal to $5(k_0k)^{0,5}$.

Table 1 : Minimum net thickness of plating

Plating	t, in mm
Decks, sides, bottom, bulkheads, web of primary supporting members, web of ordinary stiffeners and other structures	$t = 3,3 + 0,048\ L\ (k_0k)^{0,5}$
Keel plate	t = thickness of adjacent bottom plating

SECTION 11 PLEASURE VESSELS

Symbols

k : Material factor defined in:
- Pt B, Ch 2, Sec 3, [2.3] for steel
- Pt B, Ch 2, Sec 3, [3.5] for aluminium alloys

k_0 : Coefficient to be taken equal to:
- k_0= 1 for steel
- k_0= 2,35 for aluminium alloys

L : Rule length, in m, defined in Pt B, Ch 1, Sec 2, [2]

t : Net thickness, in mm, of plating.

1 General

1.1 Application

1.1.1 Vessels complying with the requirements of this Section are eligible for the assignment of the service notation **Pleasure vessel**, as defined in Pt A, Ch 1, Sec 3, [7.1.1].

1.1.2 Vessels dealt with in this Section are to comply with the requirements stated under Part A, Part B and Part C of the Rules, as applicable, and with the requirements of this Section, which are specific to pleasure vessels.

2 Stability

2.1 General

2.1.1 Proof of sufficient intact stability according to Pt B, Ch 2, Sec 2 is to be furnished.

The Society may waive this requirement, depending on the vessel design and operating conditions.

3 Hull scantlings

3.1 General

3.1.1 The scantlings of the hull structure are to be determined in compliance with Part B, Chapter 5 and relevant Sections of Part B, Chapter 6, taking into account additional requirements defined in [3.2].

3.2 Additional requirements

3.2.1 Minimum net thickness of plating

The minimum thickness of the shell plating and deck plating are to be obtained from Tab 1.

3.2.2 Topside structure

The topside structure scantlings are to be determined according to Pt B, Ch 5, Sec 4, [3], where the minimum net thickness, in mm, is to be taken equal to $5(k_0k)^{0,5}$.

Table 1 : Minimum net thickness of plating

Plating	t, in mm
Decks, sides, bottom, bulkheads, web of primary supporting members, web of ordinary stiffeners and other structures	$t = 3,3 + 0,048\ L\ (k_0k)^{0,5}$
Keel plate	t = thickness of adjacent bottom plating

Part D
Additional Requirements for Notations

Chapter 2
ADDITIONAL CLASS NOTATIONS

SECTION 1 NAVIGATION IN ICE

Symbols

h : Height, in m, of load area defined in [2.5.4]

k : Material factor defined in:
- Pt B, Ch 2, Sec 3, [2.3] for steel
- Pt B, Ch 2, Sec 3, [3.5] for aluminium alloys

k_0 : Coefficient to be taken equal to:
- k_0= 1 for steel
- k_0= 2,35 for aluminium alloys

LWL : Lower waterline, defined in [1.3.2]

p : Design ice pressure, in N/mm², defined in [2.5.5]

R_{eH} :
- for hull structural steels:

  R_{eH} is the nominal yield point, in N/mm²
- for aluminium alloys:

  R_{eH} is the minimum specified yield stress of the parent model in welded condition $R'_{P0,2}$, in N/mm²

S : Spacing, in m, of primary supporting members

s : Spacing, in m, of ordinary stiffeners.

UWL : Upper waterline, defined in [1.3.1]

ℓ : Span, in m, of ordinary stiffeners or primary supporting members, as applicable

1 General

1.1 Application

1.1.1 The following additional class notations are assigned, in accordance with Pt A, Ch 1, Sec 3, [11.13] to vessels strengthened for navigation in ice and complying with the relevant requirements of this Section:

- **Ice**
- **Ice-30**
- **Ice-40**
- **Ice-40+**

1.1.2 The ice strengthening requirements for **Ice-40+** in this Section are equivalent to those corresponding to **ICE CLASS IC** in the "Finnish-Swedish Ice Class Rules 2010 as amended".

1.1.3 The ice strengthening requirements for **Ice-40** are those of the fore region, rudder and steering arrangements of the additional class notation **Ice-40+**.

1.1.4 The ice strengthening requirements for the additional class notations **Ice** and **Ice-30** cover vessels operated in drift ice of thickness not exceeding the values defined in Tab 1.

1.2 Owner's responsibility

1.2.1 It is the responsibility of the Owner to decide which ice class notation is the most suitable in relation to the expected service conditions of the vessel.

For vessels intended to operate under more severe ice conditions, the Society's Rules for navigation in ice for seagoing vessels must be applied for the corresponding/required ice class.

These Rules are not applicable to vessels intended for ice breaking.

1.3 Definitions

1.3.1 Upper waterline

The upper waterline (UWL) is the highest waterline at which the vessel is intended to operate in ice. The line may be a broken line.

1.3.2 Lower waterline

The lower waterline (LWL) is the lowest waterline at which the vessel is intended to operate in ice.

1.3.3 Ice belt

The ice belt is that portion of the side shell which is to be strengthened. Its vertical extension is equal to the required extension of strengthenings. See Tab 2.

1.4 Draught limitations in ice

1.4.1 Maximum draught

The draught and trim limited by the UWL are not to be exceeded when the vessel is navigating in ice.

1.4.2 Minimum draught

The vessel is always to be loaded down to at least the LWL when navigating in ice. Any ballast tank situated above the LWL and needed to load down the vessel to this water line is to be equipped with devices to prevent the water from freezing.

1.4.3 Minimum forward draught

In determining the LWL, due regard is to be paid to the need to ensure a reasonable degree of ice going capability in ballast condition. The propeller is to be fully submerged, if possible entirely below the ice.

1.5 Documentation to be submitted

1.5.1 The plans relevant to the shell expansion and fore and aft part structures are to define, at midship, fore and aft ends, the upper waterline (UWL) and the lower waterline (LWL). The borderlines of fore, midship and aft regions, according to [2.2], are also to be defined on the shell expansion plans.

1.6 Ice thickness

1.6.1 Height of the ice load area

a) An ice strengthened vessel is assumed to operate in conditions corresponding to an ice level with a thickness not exceeding the value h_G .

b) The design height of the area actually under ice pressure at any time is, however, assumed to be only a fraction h, of the ice thickness h_G .

c) The values for h_G and h, in m, are given in Tab 1.

Table 1 : Ice load height

Additional class notation	h_G , in m	h, in m
Ice	0,2	0,075
Ice-30	0,3	0,10
Ice-40 **Ice-40+**	0,4	0,22

1.7 Output of propulsion machinery

1.7.1 For vessels assigned **Ice-40+**, the engine output is to be not less than that determined according to NR467, Pt F, Ch 8, Sec 1, [3.1.3].

2 Hull

2.1 Ice strengthened area vertical extension

2.1.1 The ice strengthened area extends:

- for plating: as defined in Tab 2
- for ordinary stiffeners and primary supporting members: from the deck down to the bilge turn.

Table 2 : Vertical extension of ice strengthened area for plating

Additional class notation	above UWL	below LWL
Ice **Ice-30**	0,3 m	0,3 m
Ice-40 **Ice-40+**	0,4 m	0,5 m

2.2 Ice strengthened area and regions

2.2.1 General

The ice strengthened area defined in [2.1.1] is divided into three regions defined in [2.2.2], [2.2.3] and [2.2.4] (see Fig 1).

2.2.2 Fore region

The fore region is the region from the stem to a line parallel to and 0,04 L aft of the forward borderline of the part of the hull where the waterlines run parallel to the centreline.

The overlap with the borderline need not exceed 5 m.

2.2.3 Midship region

The midship region is the region from the aft boundary of the fore region to a line parallel to and 0,04 L aft of the aft borderline of the part of the hull where the waterlines run parallel to the centreline.

The overlap with the borderline need not exceed 5 m.

2.2.4 Aft region

The aft region is the region from the aft boundary of the midship region to the stern.

2.3 General framing arrangement

2.3.1 The frame spacings and spans in this Section are normally assumed to be measured along the plate and perpendicular to the axis of the stiffener for plates, along the flange for members with a flange, and along the free edge for flat bar stiffeners. For curved members the span (or spacing) is defined as the chord length between span (or spacing) points. The span points are defined by the intersection between the flange or upper edge of the member and the supporting structural element (stringer, web frame, deck or bulkhead).

2.3.2 The effective breadth of the attached plate to be used for calculating the combined section modulus of the stiffener, stringer and web frame and attached plate is to be taken as specified in Pt B, Ch 2, Sec 4.

2.3.3 The requirements for the section modulus and shear area of the ordinary stiffeners and the primary supporting members in [2.6] are with respect to effective member cross section. For such cases where the member is not normal to the plating, the section properties are to be adjusted in accordance with Pt B, Ch 2, Sec 4, [3.1.1].

2.3.4 Within the ice-strengthened area defined in [2.1.1], all ordinary stiffeners are to be effectively attached to all the supporting structures. A longitudinal ordinary stiffener is to be attached to all the supporting web frames and bulkheads by brackets. When a transverse ordinary stiffener terminates at a stringer or a deck, a bracket or a similar construction is to be fitted. Brackets are to have at least the same thickness as the web plate of the ordinary stiffener and the edge is to be appropriately stiffened against buckling.

When an ordinary stiffener is running through the supporting structure, both sides of the web plate of the ordinary stiffener are to be connected to the structure (by direct welding or collar plate, see example in Fig 2).

2.3.5 For the fore region of ice strengthened area of vessels with additional class notations **Ice-40** and **Ice-40+**, the following requirements are to be complied with:

Figure 1 : Ice strengthened area and regions

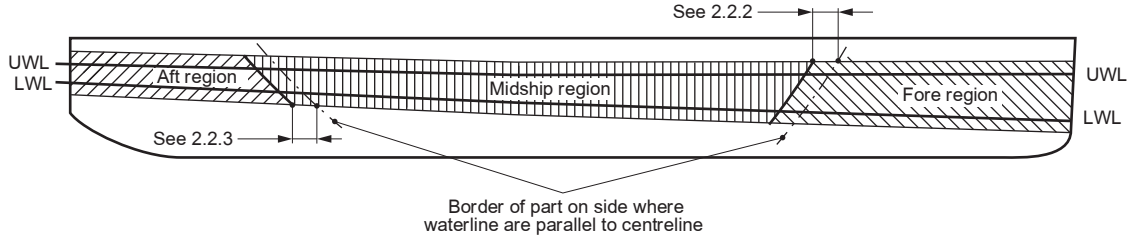

- ordinary stiffeners are to be attached to the shell by double continuous welds; no scalloping is allowed (except when crossing shell plate butts).
- the web thickness of the ordinary stiffeners are to be at least half that of the shell plating; where there is a deck, tank top or bulkhead in lieu of an ordinary stiffener the plate thickness is to be as above, to a depth corresponding to the height of adjacent ordinary stiffeners.
- frames that are not normal to the plating or the profile is unsymmetrical, and the span exceeds 4,0 m, are to be supported against tripping by brackets, intercostals, stringers or similar at a distance not exceeding 1,3 m. If the span is less than 4,0 m, the supports against tripping are required for unsymmetrical profiles and stiffeners the web of which is not normal to plating.

Figure 2 : End connection of ordinary stiffener
Two collar plates

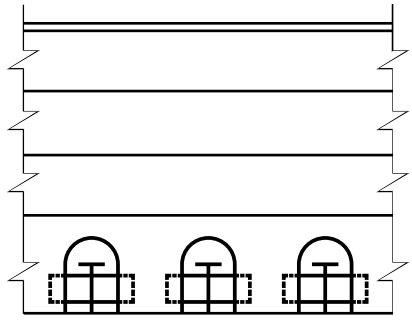

2.4 Transverse framing arrangement

2.4.1 Upper end of transverse framing

Upper end of the strengthened part of a main ordinary stiffener and an intermediate ice ordinary stiffener is to be attached to a deck or to an ice side girder, as required in [2.6.6].

Where an intermediate ordinary stiffener terminates above a deck or an ice side girder which is situated at or above the upper limit of the ice strengthened area, the part above the deck or side girder may have the scantlings required for an unstrengthened vessel and the upper end may be connected to the adjacent main ordinary stiffeners by an horizontal member of the same scantlings as the main ordinary stiffener.

2.4.2 Lower end of transverse framing

The lower end of the strengthened part of a main ordinary stiffener and intermediate ice ordinary stiffener is to be attached to a tank top or an ice side girder as required in [2.6.6].

Where an intermediate ordinary stiffener terminates below a tank top or an ice side girder which is situated at or below the lower limit of the ice strengthened area, the lower end may be connected to the adjacent main ordinary stiffeners by an horizontal member of the same scantlings as the ordinary stiffeners.

2.5 Design loads

2.5.1 Because of the different flexural stiffness of plating, ordinary stiffeners and primary supporting members, the ice load distribution is to be assumed to be as shown in Fig 3.

Figure 3 : Ice load distribution on vessel side

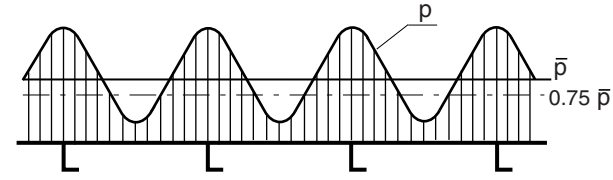

2.5.2 The formulae and values given in this Section may be substituted by direct analysis if they are deemed by the Society to be invalid or inapplicable for a given structural arrangement or detail. Otherwise, direct analysis is not to be utilized as an alternative to the analytical procedures prescribed by explicit requirements.

Direct analyses are to be carried out using the load patch (p, h and ℓ_a). The pressure to be used is 1,8p. The load patch is to be applied at locations where the capacity of the structure under the combined effects of bending and shear are minimized. In particular, the structure is to be checked with load centred at the UIWL, 0,5 h_i below the LIWL, and positioned several vertical locations in between. Several horizontal locations are also to be checked, especially the locations centred at the mid-span or mid-spacing. Further, if the load length ℓ_a cannot be determined directly from the arrangement of the structure, several values of ℓ_a are to be checked using corresponding values for c_a.

Acceptance criterion for designs is that the combined stresses from bending and shear, using the von Mises yield criterion, are lower than the yield point R_{eH}. When the direct calculation is using beam theory, the allowable shear stress is not to be larger than 0,9 τ_Y, where:

$$\tau_Y = \frac{R_{eH}}{\sqrt{3}}$$

2.5.3 If scantlings obtained from the requirements of this Article are less than those required for the unstrengthened vessel, the latter are to be used.

2.5.4 Height of load area

The height of the area under ice pressure at any particular point of time is to be obtained, in m, from Tab 3 depending on the additional class notation assigned to the vessel.

2.5.5 Design ice pressure

The value of the design ice pressure p, in N/mm², to be considered for the scantlings check, is obtained from the following formula:

$p = c_d\, c_P\, c_a\, p_0$

where:

c_d : Coefficient taking account of the influence of the size and engine output of the vessel, to be obtained from the following formula:

$$c_d = \frac{a\,f + b}{1000}$$

a, b : Coefficients defined in Tab 4

f : Coefficient to be obtained from the following formula:

$$f = \frac{\sqrt{\Delta\,P}}{1000}$$

Δ : Displacement, in t, at the maximum draught

P : Actual continuous output of propulsion machinery, in kW

c_P : Coefficient taking account of the probability of the design ice pressure occurring in a particular region of the hull for the additional class notation considered, defined in Tab 5

Table 3 : Height of load area

Additional class notation	h, in m
Ice	0,075
Ice-30	0,100
Ice-40 **Ice-40+**	0,220

Table 4 : Coefficients a and b

Region	a	b
Fore	30	230
Midship and aft	8	214

Table 5 : Coefficient c_P

Region	Additional class notation	
	Ice, **Ice-30**, **Ice-40**	**Ice-40+**
Fore	1,00	1,00
Midship	NA	0,50
Aft	NA	0,25

Table 6 : Distance ℓ_a

Structure	Type of framing	ℓ_a
Shell plating	transverse	1 spacing of ordinary stiffeners
	longitudinal	1,7 spacings of ordinary stiffeners
Ordinary stiffeners	transverse	1 spacing of ordinary stiffeners
	longitudinal	1 span of ordinary stiffeners
Vertical primary supporting members		2 spacings of vertical primary supporting members
Ice side girders		1 span of side girders

c_a : Coefficient taking account of the probability that the full length of the area under consideration will be under pressure at the same time, to be obtained from the following formula:

$$c_a = \sqrt{\frac{0,6}{\ell_a}}$$

without being taken less than 0,35 nor greater than 1,0

ℓ_a : Distance, in m, defined in Tab 6

p_0 : Nominal ice pressure, in N/mm², to be taken equal to 5,6.

2.6 Hull scantlings

2.6.1 Plating scantling - general

The plating thickness is to be strengthened according to [2.6.2] within the strengthened area for plating defined in [2.1.1].

2.6.2 Plating thickness in the ice strengthened area

The gross thickness of the shell plating is to be not less than the value obtained, in mm, from the following formulae:

- for transverse framing:

$$t = 667\,s\sqrt{\frac{F_1\,p_{PL}}{R_{eH}}} + t_c$$

- for longitudinal framing:

$$t = 667\,s\sqrt{\frac{p_{PL}}{F_2\,R_{eH}}} + t_c$$

where:

p_{PL} : Ice pressure on the shell plating to be obtained, in N/mm², from the following formula:

$p_{PL} = 0,75\,p$

F_1 : Coefficient to be obtained from the following formula:

$$F_1 = 1,3 - \frac{4,2}{\left[\frac{h}{s} + 1,8\right]^2}$$

without being taken greater than1,0

F_2 : Coefficient to be obtained from the following formula:

$$F_2 = 0,6 + 0,4\frac{s}{h}$$

t_C : Abrasion and corrosion addition, in mm, to be taken equal to 4 mm.

- 2 mm for steel
- 4 mm for aluyminium alloys

Where a special surface coating, by experience shown capable to withstand the abrasion of ice, is applied, a lower value of t_C may be accepted by the Society on a case by case basis.

2.6.3 Ordinary stiffeners scantling - general

Ordinary stiffeners are to be strengthened according to [2.6.4] and [2.6.5] within the strengthened area for ordinary stiffeners defined in [2.1.1].

2.6.4 Scantlings of transverse ordinary stiffeners

The gross section modulus w, in cm³ and the gross effective shear area A_{sh}, in cm², of transverse ordinary stiffeners are to be not less than the values obtained from the following formulae:

$$w = \frac{7 - 5(h/\ell)}{7 m_0} \cdot \frac{p s h \ell}{R_{eH}} \cdot 10^6$$

$$A_{sh} = \frac{\sqrt{3} F_3 p h s}{2 R_{eH}} 10^4$$

where:

F_3 : Coefficient taking account of the maximum shear force versus the load location and the shear stress distribution, and to be taken equal to 1,20

m_0 : Coefficient defined in Tab 7.

2.6.5 Scantlings of longitudinal ordinary stiffeners

The gross section modulus w, in cm³ and the gross effective shear area A_{Sh} , in cm², of longitudinal ordinary stiffeners with or without brackets are to be not less than the values obtained from the following formulae:

$$w = \frac{F_4 p h \ell^2}{m_1 R_{eH}} 10^6$$

$$A_{Sh} = \frac{\sqrt{3} F_4 F_5 p h \ell}{2 R_{eH}} 10^4$$

where:

F_4 : Coefficient taking account of the load distribution on adjacent ordinary stiffeners and to be obtained from the following formula:

$$F_4 = 1 - 0{,}2 \frac{h}{s}$$

F_5 : Coefficient taking account of the pressure definition and maximum shear force versus load location and also shear stress distribution, and to be taken equal to 2,16

Table 7 : Coefficient m_0

Boundary condition	Example	m_0
Type 1 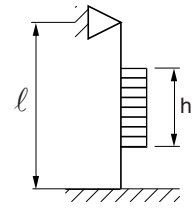	Ordinary stiffeners extending from the tank top to a single deck	6,0
Type 2 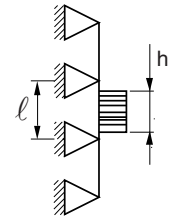	Continuous ordinary stiffeners between several decks or side girders	5,7
Type 3 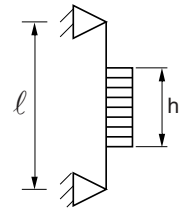	Ordinary stiffeners extending between two decks only	5,0

Note 1: The boundary conditions are those for the main and intermediate ordinary stiffeners.
Note 2: Load is applied at mid-span.

m_1 : Boundary condition coefficient for the ordinary stiffener considered, to be taken equal to 13,3 for a continuous beam. Where the boundary conditions deviate significantly from those of a continuous beam, e.g. in an end field, a smaller value of m_1 may be required. In such a case, for ordinary stiffeners without brackets, m_1 = 11,0 is to be used.

Note 1: In calculating the actual shear area of longitudinal ordinary stiffeners, the area of the brackets is not to be taken into account.

2.6.6 Ice stringers

The section modulus w, in cm³ and the effective section area A_{Sh} , in cm², of a stringer located within the ice strengthened area defined in [2.1.1] are to be not less than the values obtained from the following formulae:

$$w = \frac{F_6 F_7 p h \ell^2}{m_S R_{eH}} 10^6$$

$$A_{Sh} = \frac{\sqrt{3} F_6 F_7 F_8 p h \ell}{2 R_{eH}} 10^4$$

where:

h : Height, in m, of load area defined in [2.5.4], without the product p·h being taken less than 0,15

m_S : Boundary condition coefficient for the ordinary stiffener considered, to be taken equal to 13,3 for a continuous beam. Where the boundary conditions deviate significantly from those of a continuous beam, e.g. in an end field, a smaller value of m_S may be required. In such a case, for girders without brackets, m_S = 11,0 is to be used

F_6 : Factor taking account of the distribution of load to the transverse frames:

- F_6 = 0,90 for ice stringers within the ice strengthened area
- $F_6 = 0{,}80\ (1 - h_S / \ell_S)$ for ice stringers outside the ice strengthened area

F_7 : Factor taking account of the design point of girders and to be taken equal to 1,8

F_8 : Factor taking account of the maximum shear force versus load location and the shear stress distribution, and to be taken equal to 1,20

h_S : Distance to the ice strengthened area, in m

ℓ_S : Distance to the adjacent ice stringer, in m.

2.6.7 Vertical primary supporting member checked through simplified model

For vertical primary supporting members which may be represented by the structure model represented in Fig 4, the gross section modulus w, in cm³, and the gross effective shear area A_{Sh}, in cm², are to be not less than the values obtained from the following formulae:

$$w = \frac{M}{R_{eH}}\left(\frac{1}{1-(\nu A_{Sh1}/A_a)^2}\right)^{\frac{1}{2}} 10^3$$

$$A_{Sh} = 10\frac{\sqrt{3}\,F_9\alpha Q}{R_{eH}}$$

where:

M : Maximum calculated shear force under the ice load, to be taken equal to:

$M = 0{,}193\ F\ \ell$

F : Load transferred to a vertical primary supporting member from a stringer or from longitudinal ordinary stiffeners, to be obtained, in kN, from the following formula:

$F = F_{10}\ p\ h\ s\ 10^3$

F_{10} : Factor taking account of the design point of girders:

- F_{10} = 1,80 for vertical primary supporting members within the ice belt
- $F_{10} = 1{,}80\ (1 - h_S / \ell_S)$ for vertical primary supporting members outside the ice belt, where:

  h_S, ℓ_S : o be taken as defined in [2.6.6]

Q : Maximum calculated shear force under the ice load F

F_9 : Factor taking account of the shear force distribution and to be taken equal to 1,1

ν, α : Coefficients defined in Tab 8

p : Design ice pressure, in N/mm², defined in [2.5.5], where the value of c_a is to be calculated assuming ℓ_a equal to 2 S

S : Distance between web frames, in m

h : Height, in m, of load area defined in [2.5.4], without the product p·h being taken less than 0,15

A_{Sh1} : Required shear area, in cm²

A_a : Actual cross-sectional area, in cm², of the vertical primary supporting member, to be taken equal to $A_F + A_W$.

Figure 4 : Reference structure model

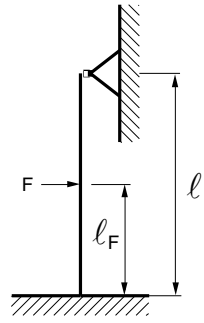

Table 8 : Coefficients α and ν

A_F/A_W	α	ν
0,20	1,23	0,44
0,40	1,16	0,62
0,60	1,11	0,71
0,80	1,09	0,76
1,00	1,07	0,80
1,20	1,06	0,83
1,40	1,05	0,85
1,60	1,05	0,87
1,80	1,04	0,88
2,00	1,04	0,89

Note 1:
A_F : Cross-sectional area of the face plate
A_W : Cross-sectional area of the web.

2.7 Fore part

2.7.1 Stem

The stem may be made of rolled, cast or forged steel (bar stem) or of shaped steel plates (see Fig 5).

A sharp edged stem improves the manoeuvrability of the vessel in ice.

The plate thickness of a shaped plate stem, is to be not less than that calculated in [2.6.2] assuming that:

- s is the spacing of elements supporting the plate, in m
- p_{PL}, in N/mm², is to be taken equal to p, defined in [2.5.5], with ℓ_a being the spacing of vertical supporting elements, in m.

Figure 5 : Example of suitable stems

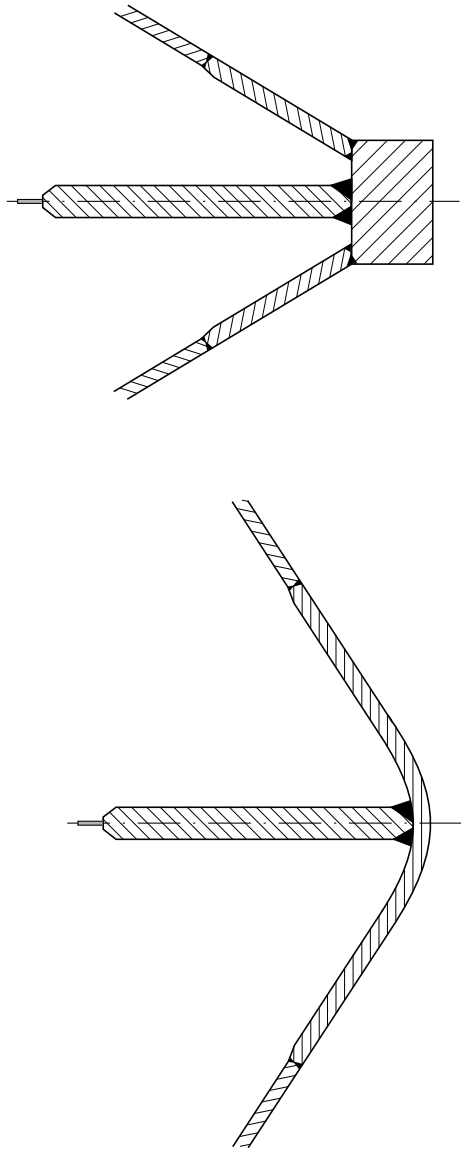

The horizontal diaphragms foreseen in Pt B, Ch 6, Sec 1, [7.2.3] are to have a reduced spacing not exceeding 0,5m. Their thickness is not to be less than 2/3 of the stem plate thickness.

A centreline web is to be provided from the forefoot to a horizontal diaphragm located at least 0,5m above the load waterline. Its thickness and depth are not to be, respectively, less than 0,67 t and 10 t, t being the stem plate thickness.

2.7.2 Bar stem

The gross sectional area, in cm^2, of the bar stem, where fitted, is to be not less than:

$A = 1,6\ f\ k_0\ k\ (0,006\ L^2 + 12)$

where:

- f = 1,0 for **IN(1,2 < x ≤ 2)**
- f = 0,9 for **IN(x ≤ 1,2)**
- f = 0,8 for **IN**

The gross thickness, in mm, is not to be less than:

$t = 1,25\ (0,33\ L\ (k_0 k)^{0,5} + 10)$

2.8 Aft part

2.8.1 An extremely narrow clearance between the propeller blade tip and the sternframe is to be avoided so as not to generate very high loads on the blade tip.

2.8.2 Shafting and stern tubes of side propellers, in general, are to be enclosed within plated bossings. If detached struts are used, their design, strength and attachment to the hull are to be examined by the Society on a case by case basis.

2.8.3 Stern frame

The section modulus of the stern sole piece is not to be less than 1,25 times the rule value laid down in Pt B, Ch 7, Sec 1, [7.2].

2.9 Side scuttles and freeing ports

2.9.1 Sidescuttles are to be not located in the ice strengthened area.

Special consideration is to be given to the design of the freeing ports.

3 Hull outfitting

3.1 Rudders and steering arrangements

3.1.1 The scantlings of rudder post, rudder stock, pintles, steering gear, etc. as well as the capacity of the steering gear are to be determined according to Pt B, Ch 7, Sec 1, taking the coefficient r_2, defined in Pt B, Ch 7, Sec 1, [2.1.2], equal to 1,10 independently of the rudder profile type.

The maximum ahead service speed of the vessel to be used in these calculations, however, is to be not taken less than that stated in Tab 9.

Where the actual maximum ahead service speed of the vessel is higher than that stated in Tab 9, the higher speed is to be used.

Within the ice strengthened zone, the thickness of rudder plating and diaphragms is to not less than that required for the shell plating of the aft region, i.e., according to [2.6], with $C_P = 0,25$.

Table 9 : Maximum ahead service speed

Notation	Maximum ahead service speed (km/h)
Ice	20
Ice-30	22
Ice-40 **Ice-40+**	26

4 Propulsion

4.1 General

4.1.1 Application

The requirements developed in [4.2] to [4.4] apply to the propulsion machinery of vessels assigned one of the following additional class notations:

- **Ice**
- **Ice-30**
- **Ice-40**

4.1.2 Propulsion machinery requirements for vessels with notation Ice-40+

Regarding the propulsion machinery, vessels assigned the additional class notation **Ice-40+**, are to comply with the applicable ice class **IC** requirements of NR467, Pt E, Ch 8, Sec 3, [1].

4.2 Ice torque

4.2.1 For the scantlings of propellers and shafting, the effect of the impact of the propeller blades against ice is also to be taken into account.

The ensuing torque, hereinafter defined as ice torque, shall be taken equal to the value M_G, in N m, calculated by the following formula:

$M_G = m\,D^2$

where:

m : Coefficient whose value is given in Tab 10, depending upon the class notation requested

D : Propeller diameter, in m.

In the cases of propellers with nozzles or of considerably submerged propellers, the value of the ice torque may be taken equal to that corresponding to the ice class notation next lower than that requested for the vessel, at the discretion of the Society.

Table 10 : Variables m and x

Ice class notation	**Ice**	**Ice-30**	**Ice-40**
m	1500	2500	10000
x	12	13	15

4.3 Propellers

4.3.1 Material

The elongation after fracture, measured with a proportional type tensile specimen, of the material used for propellers, is not to be less than 19%. Materials other than copper alloys are to be Charpy V-notch impact tested at a temperature of – 10°C with a minimum average energy not less than 20 J.

4.3.2 Scantlings

The width l and the maximum thickness t of the cylindrical sections of the propeller blades are to be such as to satisfy the conditions stated in items a), b) and c):

a) CYLINDRICAL SECTIONS AT THE RADIUS OF 0,125 D for fixed pitch propellers:

$$l \cdot t^2 \geq \frac{26,5}{R_m \cdot \left[0,65 + \left(\frac{0,7}{\rho}\right)\right]} \cdot \left(\frac{2,85 M_T}{z} + 2,24 M_G\right)$$

b) CYLINDRICAL SECTIONS AT THE RADIUS OF 0,175 D for controllable pitch propellers:

$$l \cdot t^2 \geq \frac{21,1}{R_m \cdot \left[0,65 + \left(\frac{0,7}{\rho}\right)\right]} \cdot \left(\frac{2,85 M_T}{z} + 2,35 M_G\right)$$

c) CYLINDRICAL SECTIONS AT THE RADIUS OF 0,30 D both for fixed and controllable pitch propellers:

$$l \cdot t^2 \geq \frac{9,3}{R_m \cdot \left[0,65 + \left(\frac{0,7}{\rho}\right)\right]} \cdot \left(\frac{2,85 M_T}{z} + 2,83 M_G\right)$$

where:

l : Width of the expanded cylindrical section of the blade at the radius in question, in cm

t : Corresponding maximum blade thickness, in cm

$\rho = D / H$

D : Propeller diameter, in m

H : Blade pitch of propeller, in m, to be taken equal to:
- the pitch at the radius considered, for fixed pitch propellers
- 70% of the nominal pitch, for controllable pitch propellers

P : Maximum continuous power of propulsion machinery for which the classification has been requested, in kW

n : Speed of rotation of propeller, in rev/min, corresponding to the power P

M_T : Value, in N·m, of torque corresponding to the above power P and speed n, calculated as follows:

$$M_T = 9550 \cdot \frac{P}{n}$$

z : Number of propeller blades

M_G : Value, in N·m, of the ice torque, calculated according to the formula given in [4.2]

R_m : Value, in N/mm², of the minimum tensile strength of the blade material.

4.3.3 Minimum thickness of blades

When the blade thicknesses, calculated by the formulae given in Pt C, Ch 1, Sec 8, [2.2.1] and Pt C, Ch 1, Sec 8, [2.3.1], are higher than those calculated on the basis of the formulae given in [4.3.2], the higher values are to be taken as rule blade thickness.

4.3.4 Minimum thickness at top of blade

The maximum thickness of the cylindrical blade section at the radius 0,475 D is not to be less than the value t_1, in mm, obtained by the following formula:

$$t_1 = (x + 2D) \cdot \left(\frac{490}{R_m}\right)^{0,5}$$

where:

x : Variable defined in Tab 10.

4.3.5 Blade thickness at intermediate sections

The thickness of the other sections of the blade shall be determined by means of a smooth curve connecting the points defined by the blade thicknesses calculated by the formulae given in [4.3.2] and [4.3.4].

4.3.6 Thickness of blade edge

The thickness of the whole blade edge, measured at a distance from the edge itself equal to 1,25 t_1 (t_1 being the blade thickness as calculated in [4.3.4]), is to be not less than 0,5 t_1.

For controllable pitch propellers, this requirement is applicable to the leading edge only.

4.3.7 Controllable pitch propellers actuating mechanism

The strength of the blade-actuating mechanism located inside the controllable pitch propeller hub is to be not less than $x \cdot 10^{-1}$ times that of the blade when a force is applied at the radius 0,45 D in the weakest direction of the blade, where x is defined in Tab 10.

4.4 Shafting

4.4.1 Propeller shaft

a) The diameter of the propeller shaft at its aft bearing is not to be less than the value d_P, in mm, calculated by the following formula:

$$d_P = K_E \cdot \left(\frac{W \cdot R_m}{R_{S,MIN}}\right)^{\frac{1}{3}}$$

where:

K_E : For propellers having hub diameter:

- not greater than 0,25 D: $K_E = 10,8$
- greater than 0,25 D: $K_E = 11,5$

W : Value, in cm^3, equal to $l \cdot t^2$, proposed for the section at the radius:

- 0,125 D for propellers having the hub diameter not greater than 0,25 D
- 0,175 D for propellers having the hub diameter greater than 0,25 D

R_m : Value, in N/mm^2, of the minimum tensile strength of the blade material

$R_{S,MIN}$: Value, in N/mm^2, of the minimum yield strength (R_{eH}) or 0,2% proof stress ($R_{p\,0,2}$) of the propeller shaft material.

b) Where the diameter of the propeller shaft, as calculated by the formula given in Pt C, Ch 1, Sec 7, [2.2], is greater than that calculated according to the formula given in a) above, the former value is to be adopted.

c) Where a cone-shaped length is provided in the propeller shaft, it is to be designed and arranged in accordance with the applicable requirements of Pt C, Ch 1, Sec 7.

d) Propeller shafts are to be in steel having impact strength as specified in NR216 Materials and Welding.

5 Miscellaneous requirements

5.1 River water inlets and cooling water systems of machinery

5.1.1

a) The cooling water system is to be designed to ensure the supply of cooling water also when navigating in ice.

b) For this purpose, at least one river water inlet chest is to be arranged and constructed as indicated hereafter:

1) the river water inlet is to be situated near the centre-line of the vessel and as aft as possible

2) the chest is to be sufficiently high to allow ice to accumulate above the inlet pipe

3) a pipe for discharging the cooling water, having the same diameter of the main overboard discharge line, is to be connected to the inlet chest

4) the area of the strum holes is to be not less than 4 times the inlet pipe sectional area.

c) Where there are difficulties in satisfying the requirements of b) 3) above, two smaller chests may be accepted, alternatively, provided that they are located and arranged as stated in the other provisions above.

d) Heating coils may be installed in the upper part of the chests.

e) Arrangements for using ballast water for cooling purposes may be accepted as a reserve in ballast conditions but are not acceptable as a substitute for the river inlet chests as described above.

5.2 Steering gear

5.2.1

a) Effective relief valves shall be provided to protect the steering gear against hydraulic overpressure.

b) The scantlings of steering gear components are to be such as to withstand the yield torque of the rudder stock.

c) Where possible, rudder stoppers working on the blade or rudder head are to be fitted.

5.3 Transverse thrusters

5.3.1 The tunnels of transverse thrusters are to be fitted with grids for protection against ice impacts.

SECTION 2 TRANSPORT OF HEAVY CARGOES

Symbols

L : Rule length, in m, defined in Pt B, Ch 1, Sec 2, [2]

t : Net thickness, in mm, of plating

s : Spacing, in m, of ordinary stiffeners

ℓ : Span, in m, of ordinary stiffeners or primary supporting members

k : Material factor defined in:

- Pt B, Ch 2, Sec 3, [2.3] for steel
- Pt B, Ch 2, Sec 3, [3.5] for aluminium alloys

k_0 : Coefficient to be taken equal to:

- k_0= 1 for steel
- k_0= 2,35 for aluminium alloys

1 All vessels

1.1 Application

1.1.1 The additional class notation **Heavycargo (AREAi, x_i kN/m²)**, is assigned, in accordance with Pt A, Ch 1, Sec 3, [11.11.1] to vessels intended to carry heavy unit cargoes.

1.1.2 Unless otherwise mentioned, these vessels are to comply, as applicable, with the requirements stated under Part A, Part B, Part C and Ch 1, Sec 1.

1.2 Documentation to be submitted

1.2.1 In addition to the documentation required in Pt B, Ch 1, Sec 3, the following information is to be submitted to the Society:

- unit cargo arrangement in holds, on decks and on hatch covers, indicating size and gross mass of cargoes
- drawings of load bearing structures indicating the design loads and including the connections to the hull structures and the associated structural reinforcements.

1.3 Design load

1.3.1 The value of design pressure p_S, in kN/m², is to be specified by the designer for each $area_i$, according to [1.1.1], and introduced as x_i values.

1.4 Hull scantlings

1.4.1 General

In general, the hull scantlings are to be not less than required in Part B, Chapter 5.

1.4.2 Primary supporting members

Strength check of primary supporting members is to be carried out by direct calculation, in compliance with Ch 1, Sec 4, [8].

2 Bulk cargo vessels

2.1 Application

2.1.1 The additional class notation **Heavycargo** is assigned, in accordance with Pt A, Ch 1, Sec 3, [11.11.1] to vessels with service notation **Bulk cargo vessel** intended to carry heavy bulk dry cargoes.

2.1.2 Unless otherwise mentioned, these vessels are to comply, as applicable, with the requirements stated under Part A, Part B, Part C and Ch 1, Sec 2.

2.2 Design loads

2.2.1 The still water bending moment and internal local loads are to be determined according to Pt B, Ch 3, Sec 2, [2.5] and Pt B, Ch 3, Sec 4, [3.2], respectively, where the cargo properties are not to be taken less than:

- cargo density, in t/m³:

  $\rho_B \geq 2,5$

- angle of repose of the bulk cargo:

  $\varphi_B \geq 35°$

2.3 Bottom or inner bottom plating thickness

2.3.1 The net thickness of bottom or inner bottom plating subjected to heavy bulk dry cargo, is to be determined according to Pt D, Ch 1, Sec 2, taking into account the additional requirement stated under [2.2.1].

This thickness, in mm, is not to be less than the value derived from the following formula:

$t_1 = 2\ L^{1/3}\ (k_0 k)^{0,5} + 3,6\ s$

SECTION 3 EQUIPPED FOR TRANSPORT OF CONTAINERS

1 General

1.1 Application

1.1.1 Vessels complying with the requirements of this Section are eligible for the assignment of the additional class notation **Equipped for transport of containers**, as defined in Pt A, Ch 1, Sec 3, [11.6.1].

1.1.2 These vessels are to comply with the requirements stated under Part A, Part B, Part C and Ch 1, Sec 1, as far as applicable.

1.2 Documentation to be submitted

1.2.1 In addition to the documentation required in Pt B, Ch 1, Sec 3, the following information is to be submitted to the Society:

- container arrangement in holds, on decks and on hatch covers, indicating size and gross mass of containers
- drawings of load bearing structures indicating the design loads and including the connections to the hull structures and the associated structural reinforcements.

2 Structure arrangements

2.1 Strength principles

2.1.1 Local reinforcements

Local reinforcements of the hull structure are to be provided under container corners and in way of fixed cargo securing devices and cell guides, if fitted.

The forces applied on the fixed cargo securing devices are to be indicated by the Designer.

2.1.2 Structural continuity

For double hull vessels, the inner side is to extend as far aft as possible and be tapered at the ends.

2.2 Bottom structure

2.2.1 Floor and girder spacing

As a recommendation, the floor spacing is to be such that floors are located in way of the container corners. Floors are also to be fitted in way of watertight bulkheads.

Girders are generally to be fitted in way of the container corners.

2.2.2 Strength continuity

Adequate strength continuity of floors and bottom transverses is to be ensured in way of the side tank by means of brackets.

2.2.3 Reinforcements in way of cell guides

The structures of the bottom and inner bottom on which cell guides rest are to be adequately stiffened with doublers, brackets or other equivalent reinforcements.

2.3 Hatch covers carrying containers

2.3.1 Efficient retaining arrangements are to be provided to prevent translation of the hatch cover under the action of the longitudinal and transverse forces exerted by the stacks of containers on the cover. These retaining arrangements are to be located in way of the hatch coaming side brackets.

Solid fittings are to be welded on the hatch cover where the corners of the containers are resting. These parts are intended to transmit the loads of the container stacks onto the hatch cover on which they are resting and also to prevent horizontal translation of the stacks by means of special intermediate parts arranged between the supports of the corners and the container corners.

3 Design loads

3.1 Design torsional torque

3.1.1 Where no specific data are provided by the Designer, the design still water torsional torque induced by the non-uniform distribution of cargo, consumable liquids and ballast is to be obtained at the midship section, in kN.m, from the following formula:

$M_T = 31{,}4\ F_T\ n_S\ n_T\ B$

where:

F_T : Distribution factor defined in Tab 1 as a function of the x co-ordinate of the hull transverse section with respect to the reference co-ordinate system defined in Pt B, Ch 1, Sec 2, [3]

n_S : Number of container stacks over the breadth B

n_T : Number of container tiers in cargo hold amidships (including containers on hatch covers).

Table 1 : Distribution factor F_T

Hull transverse section location	Distribution factor F_T
$0 \le x < 0{,}5\ L$	x / L
$0{,}5\ L \le x \le L$	$(1 - x / L)$

3.2 Forces on containers

3.2.1 Still water and inertial forces

The force F_i applied to one container located at the level "i", as defined in Fig 2, is to be determined in compliance with Pt B, Ch 3, Sec 4, [3.4].

The mass m_i of the containers is to be defined by the Designer.

Where the mass of loaded containers is not known, the following values may be used:

- for 40 feet containers: m_i = 27 t
- for 20 feet containers: m_i = 17 t.

Where empty containers are stowed at the top of a stack, the following values may be used:

- 0,14 times the weight of a loaded container, in case of empty steel containers
- 0,08 times the weight of a loaded container, in case of empty aluminium containers.

3.2.2 Wind forces applied to one container

The forces due to the effect of the wind, applied to one container stowed above deck at level i (see Fig 1), are to be obtained, in kN, from the following formulae:

- in x direction:

  $F_{X, WD, i} = p_{WD}\, h_C\, b_C$

- in y direction:

  $F_{Y, WD, i} = p_{WD}\, h_C\, \ell_C$

where:

h_C : Height, in m, of a container

ℓ_C, b_C : Dimension, in m, of the container stack in the vessel longitudinal and transverse directions, respectively

p_{WD} : Wind pressure, in kN/m², defined in Pt B, Ch 3, Sec 4, [2.1.3].

These forces are only acting on the stack exposed to wind.

In the case of M juxtaposed and connected stacks of the same height, the wind forces are to be distributed over the M stacks.

In the case of juxtaposed and connected stacks of different heights, the wind forces are to be distributed taking into account the number of stacks at the level considered (see example in Fig 4.

3.2.3 Stacks of containers

The still water, inertial and wind forces to be considered as being applied at the centre of gravity of the stack, and those transmitted at the corners of such stack is to be obtained, in kN, as specified in Tab 2.

3.2.4 Securing load

The scantling load of securing devices is to be determined assuming an angle of list of 12°.

Figure 1 : Containers level in a stack

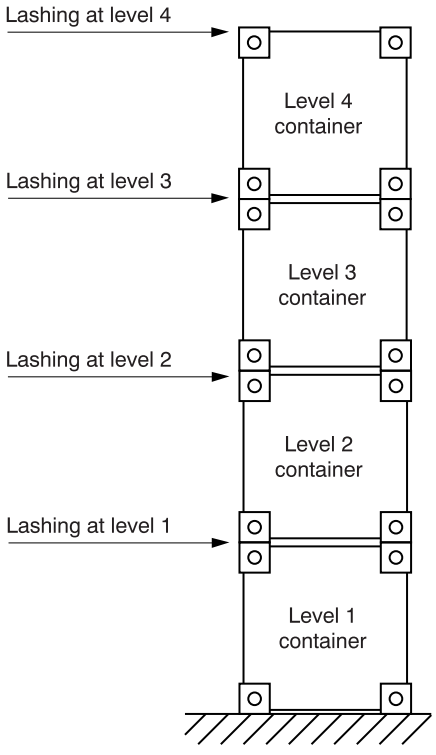

4 Hull scantlings

4.1 General

4.1.1 In general, the hull scantlings are to be not less than required in Part B, Chapter 5.

4.1.2 Scantlings of structural members subjected to concentrated loads are to be determined by direct calculation according to Pt B, Ch 2, Sec 8, [2]**. In particular, the requirements of** [5] **are to be complied with.**

4.1.3 Where the operating conditions (loading / unloading sequence as well as consumable and ballast distribution) are likely to induce excessive torsional torque, the torsional strength is to be checked, using the design torsional torque derived from [3.1.1].

5 Direct calculation

5.1 General

5.1.1 These requirements apply to the grillage analysis of primary supporting members subjected to concentrated loads.

Direct calculation is to be carried out in compliance with Pt B, Ch 2, Sec 8, [2].

Table 2 : Containers - Still water, inertial and wind forces

Ship condition	Still water force F_S and inertial and wind force F_W, in kN, acting on each container stack	Vertical still water force R_S and inertial and wind force R_W, in kN, transmitted at the corners of each container stack
Still water condition	$F_S = \sum_{i=1}^{N} F_{S,i}$	$R_S = \frac{F_S}{4}$
Upright condition (see Fig 2)	• in x direction: $F_{W,X} = \sum_{i=1}^{N} (F_{W,X,i} + F_{X,WD,i})$ • in z direction: $F_{W,Z} = \sum_{i=1}^{N} F_{W,Z,i}$	$R_{W,1} = \frac{F_{W,Z}}{4} + \frac{N_C h_C F_{W,X}}{4 \ell_C}$ $R_{W,2} = \frac{F_{W,Z}}{4} - \frac{N_C h_C F_{W,X}}{4 \ell_C}$
Inclined condition (negative roll angle) (see Fig 3)	• in y direction: $F_{W,Y} = \sum_{i=1}^{N} (F_{W,Y,i} + F_{Y,WD,i})$ • in z direction: $F_{W,Z} = \sum_{i=1}^{N} F_{W,Z,i}$	$R_{W,1} = \frac{F_{W,Z}}{4} + \frac{N_C h_C F_{W,Y}}{4 b_C}$ $R_{W,2} = \frac{F_{W,Z}}{4} - \frac{N_C h_C F_{W,Y}}{4 b_C}$

Note 1:
N_C : Number of containers per stack
h_C : Height, in m, of a container
ℓ_C, b_C : Dimension, in m, of the container stack in the vessel longitudinal and transverse directions, respectively.

Figure 2 : Inertial and wind forces Upright vessel condition

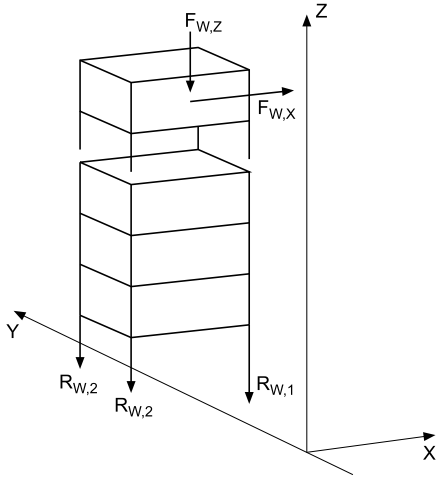

Figure 3 : Inertial and wind forces Inclined vessel condition

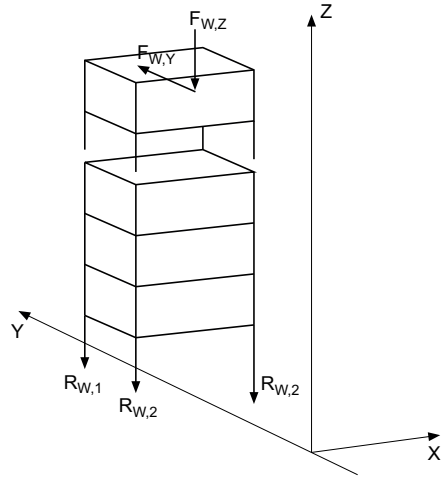

Figure 4 : Distribution of wind forces in the case of stacks of different heights

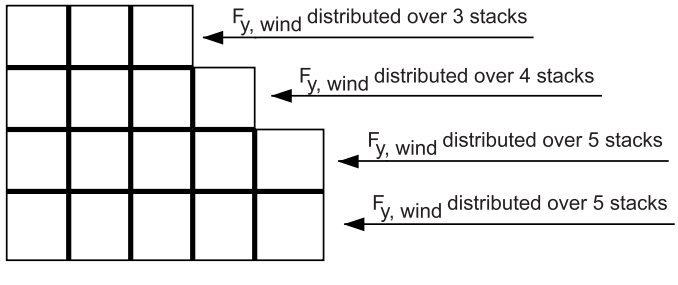

SECTION 4 EQUIPPED FOR TRANSPORT OF WHEELED VEHICLES

1 General

1.1 Application

1.1.1 Vessels complying with the requirements of this Section are eligible for the assignment of the additional class notation **Equipped for transport of wheeled vehicles**, as defined in Pt A, Ch 1, Sec 3, [11.7.1].

1.1.2 These vessels are to comply with the requirements stated under Part A, Part B, Part C and Ch 1, Sec 1, as far as applicable.

1.2 Documentation to be submitted

1.2.1 In addition to the documentation required in Pt B, Ch 1, Sec 3, a wheeled vehicle arrangement plan including the following details:

- type of vehicles
- axle load
- configuration and number of wheels per axle
- distance between axles
- distance between wheels
- tyre print area,

is to be submitted to the Society.

2 Vessel arrangements

2.1 Sheathing

2.1.1 Wood sheathing is recommended for caterpillar trucks and unusual vehicles.

It is recommended that a piece of wood of suitable thickness should be provided under each crutch in order to distribute the mass over the plate and the nearest stiffeners.

2.2 Hull structure

2.2.1 Framing

In general, RoRo cargo decks or platforms are to be longitudinally framed.

Where a transverse framing system is adopted, it is to be considered by the Society on a case by case basis.

2.3 Drainage of cargo spaces, other than RoRo spaces, intended for the carriage of motor vehicles with fuel in their tanks for their own propulsion

2.3.1 Scupper draining

Scuppers from cargo spaces, other than RoRo spaces, intended for the carriage of motor vehicles with fuel in their tanks for their own propulsion are not to be led to machinery or other places where sources of ignition may be present.

3 Scantlings

3.1 RoRo cargo spaces

3.1.1 Design loads

The wheeled loads induced by vehicles are defined in Pt B, Ch 3, Sec 4, [3.5].

3.1.2 The scantlings of RoRo cargo spaces are to be in compliance with Ch 1, Sec 5, [4].

3.2 Movable decks and inner ramps

3.2.1 The requirements applicable to movable decks and inner ramps are defined in Pt B, Ch 6, Sec 6, [1].

3.3 External ramps

3.3.1 The requirements applicable to external ramps are defined in Pt B, Ch 6, Sec 6, [2].

SECTION 5 FERRY

1 General

1.1 Application

1.1.1 Passenger vessels complying with the requirements of this Section are eligible for the assignment of the additional class notation **Ferry**, as defined in Pt A, Ch 1, Sec 3, [11.8].

1.1.2 These vessels are to comply with the requirements stated under Part A, Part B, Part C and Ch 1, Sec 6, as far as applicable.

1.2 Documentation to be submitted

1.2.1 In addition to the documentation required in Pt B, Ch 1, Sec 3, the following information is to be submitted:

a) Plans of ramps, elevators for cargo handling and movable decks, if any, including:
   - structural arrangements of ramps, elevators and movable decks with their masses
   - arrangements of securing and locking devices
   - connection of ramps, lifting and/or hoisting appliances to the hull structures, with indication of design loads (amplitude and direction)
   - wire ropes and hoisting devices in working and stowed position
   - hydraulic jacks
   - loose gear (blocks, shackles, etc.) indicating the safe working loads and the testing loads
   - test conditions

b) Plan of arrangement of motor vehicles, railway cars and/or other types of vehicles which are intended to be carried and indicating securing and load bearing arrangements

c) Characteristics of motor vehicles, railways cars and/or other types of vehicles which are intended to be carried: (as applicable) axle load, axle spacing, number of wheels per axle, wheel spacing, size of tyre print

d) Plan of dangerous areas, in the case of vessels intended for the carriage of motor vehicles with petrol in their tanks.

1.3 Definitions

1.3.1 RoRo spaces

Ro-ro spaces are spaces not normally subdivided in any way and normally extending to either a substantial length or the entire length of the vessel in which motor vehicles with fuel in their tanks for their own propulsion and/or goods (packaged or in bulk, in or on rail or road cars, vehicles (including road or rail tankers), trailers, containers, pallets, demountable tanks or in or on similar stowage units or other receptacles) can be loaded and unloaded normally in a horizontal direction.

1.3.2 Special category spaces

Special category spaces are those enclosed vehicle spaces above and below the bulkhead deck, into and from which vehicles can be driven and to which passengers have access. Special category spaces may be accommodated on more than one deck.

2 Vessel arrangements

2.1 Sheathing

2.1.1 Wood sheathing is recommended for caterpillar trucks and unusual vehicles.

It is recommended that a piece of wood of suitable thickness should be provided under each crutch in order to distribute the mass over the plate and the nearest stiffeners.

2.2 Hull structure

2.2.1 Framing

In general, car decks or platforms are to be longitudinally framed.

Where a transverse framing system is adopted, it is to be considered by the Society on a case-by-case basis.

3 Scantlings

3.1 RoRo spaces

3.1.1 Design loads

The wheeled loads induced by vehicles are defined in Pt B, Ch 3, Sec 4, [3.5].

3.1.2 The scantlings of RoRo spaces are to be in compliance with Ch 1, Sec 5, [4].

3.2 Movable decks and inner ramps

3.2.1 The requirements applicable to movable decks and inner ramps are defined in Pt B, Ch 6, Sec 6, [1].

3.3 External ramps

3.3.1 The requirements applicable to external ramps are defined in Pt B, Ch 6, Sec 6, [2].

4 Protection of special category and RoRo spaces

4.1 Precaution against ignition of flammable vapours in closed RoRo spaces and special category spaces

4.1.1 Electrical installations

a) Installations in special category and closed RoRo spaces located above the bulkhead deck

On any deck or platform, if fitted, on which vehicles are carried and on which explosive vapours might be expected to accumulate, except for platforms with openings of sufficient size permitting penetration of petrol gases downwards, electrical equipment and cables are to be installed at least 450 mm above the deck or platform.

Where the installation of electrical equipment and cables at less than 450 mm above the deck or platform is deemed necessary for the safe operation of the vessel, the electrical equipment is to be of a certified safe type as stated in Pt C, Ch 2, Sec 2, [5.2.3] and to have the minimum explosion group IIA and temperature class T3.

Electrical equipment is to be as stated in Pt C, Ch 2, Sec 2, [5.2.4].

b) Installations in special category and closed RoRo spaces located below the bulkhead deck

An electrical equipment installed is to be as stated in Pt C, Ch 2, Sec 2, [5.2.3] and to have the minimum explosion group IIA and temperature class T3.

c) Ventilation

Electrical equipment and cables in exhaust ventilation ducts are to be as stated in Pt C, Ch 2, Sec 2, [5.2.3] and to have the minimum explosion group IIA and temperature class T3.

4.1.2 Ventilation systems

There shall be provided an effective power ventilation system sufficient to give at least the following air changes:

- Special category spaces: 10 air changes per hour
- Closed RoRo spaces other than special category spaces: 10 air changes per hour.

4.1.3 Other ignition sources

Other equipment which may constitute a source of ignition of flammable vapours shall not be permitted.

4.1.4 Scuppers and discharges

Scuppers and discharges shall not be led to machinery or other spaces where sources of ignition may be present.

4.2 Detection and alarm

4.2.1 There shall be provided a fixed fire detection and fire alarm system complying with the requirements of Pt C, Ch 4, Sec 3. The fixed fire detection system shall be capable of rapidly detecting the onset of fire. The type of detectors and their spacing and location shall be to the satisfaction of the Society, taking into account the effects of ventilation and other relevant factors. After being installed, the system shall be tested under normal ventilation conditions and shall give an overall response time to the satisfaction of the Society.

Fire detectors are to be smoke detectors.

4.3 Structural protection

4.3.1 The boundary bulkheads and decks of special category spaces and RoRo spaces shall be insulated to A30 class standard. However, where:

- open deck space
- sanitary and similar space, or
- tanks, voids and auxiliary machinery spaces having little or no fire risk,

is on one side of the division, the standard may be reduced to A0.

Where fuel oil tanks are below a special category space or a RoRo space, the integrity of the deck between such spaces may be reduced to A0 standard.

4.4 Fire extinction

4.4.1 Fixed fire-extinguishing systems

RoRo spaces, which are not special category spaces and are capable of being sealed from a location outside of the cargo spaces, shall be fitted with a fixed gas fire-extinguishing system complying with the provisions of Pt C, Ch 4, Sec 4, [4].

RoRo spaces not capable of being sealed and special category spaces shall be fitted with a fixed water-based fire-fighting system complying with the provisions of NR467, Pt C, Ch 4, Sec 14, which shall protect all parts of any deck and vehicle platform in such spaces.

The Society may permit the use of any other fixed fire-extinguishing system that has been shown, by a full-scale test in conditions simulating a flowing petrol fire in a vehicle a RoRo space, to be not less effective in controlling fires likely to occur in such a space.

4.4.2 Portable fire extinguishers

Portable fire extinguishers shall be provided in compliance with Pt C, Ch 4, Sec 4, [2].

SECTION 6 DAMAGE STABILITY

Symbols

B	:	Breadth, in m, defined in Pt B, Ch 1, Sec 2, [2.2]
B_2	:	Breadth of the side tank, in m
C_B	:	Block coefficient, defined in Pt B, Ch 1, Sec 2, [2]
D	:	Depth, in m, defined in Pt B, Ch 1, Sec 2, [2.3]
D_2	:	Height of the double bottom, in m
KG	:	Height, in m, of the centre of gravity above base line
L	:	Rule length, in m, defined in Pt B, Ch 1, Sec 2, [2.1]
L_{OA}	:	Length overall, in m, defined in Pt B, Ch 1, Sec 2, [2.5]
L_{WL}	:	Length of waterline, in m, defined in Pt B, Ch 1, Sec 2, [2.6]
T	:	Scantling draught, in m, defined in Pt B, Ch 1, Sec 2, [2.4]
Δ	:	Displacement, in tons, at draught T
v	:	Maximum speed of the vessel in relation to the water, in km/h.

1 General

1.1 Application

1.1.1 Vessels complying with the requirements of this Section are eligible for the assignment of the additional class notation **Damage stability**, as defined in Pt A, Ch 1, Sec 3, [11.14].

1.1.2 The general requirements of Pt B, Ch 2, Sec 2, [1] to Pt B, Ch 2, Sec 2, [3] are to be complied with.

1.2 Documents to be submitted

1.2.1 The documents to be submitted are listed in Pt B, Ch 2, Sec 2, [2.1].

The Society may require any other necessary guidance for the safe operation of the vessel.

2 Cargo vessels

2.1 General

2.1.1 The requirements of this Article apply to the following dry cargo vessels:

- Bulk cargo vessels
- General cargo vessels
- RoRo cargo vessels.

2.2 Assumptions

2.2.1 The following assumptions shall be taken into consideration for the damaged condition:

a) Extent of side damage:
   - longitudinal extent: at least 0,10 L_{OA} but not less than 5,00 m
   - transverse extent: B_2 – 0,01 m
   - vertical extent: from base line upwards without limit.

b) Extent of bottom damage:
   - longitudinal extent: at least 0,10 L_{OA} but not less than 5,00 m
   - transverse extent: 3,00 m
   - vertical extent: from base line to D_2 – 0,01 m, the sump excepted.

c) Any bulkhead within the damaged area shall be assumed damaged, which means that the location of bulkheads shall be chosen so as to ensure that the vessel remains afloat after the flooding of two or more adjacent compartments in the longitudinal direction.

   The following provisions are applicable:
   - for bottom damage, adjacent athwartship compartments shall also be assumed flooded
   - the lower edge of any non-watertight opening (e.g. windows, doors and access hatchways) shall, at the final stage of flooding, be not less than 0,10 m above the damage waterline.

2.2.2 In general, permeability μ shall be assumed to be 95%. Where an average permeability of less than 95% is calculated for any compartment, this calculated value obtained may be used.

However, the values of permeability given in Tab 1 are the minimum values to be used.

For the main engine room only the one-compartment standard need be taken into account, i.e. the end bulkheads of the engine room shall be assumed as not damaged.

Figure 1 : Proof of damage stability

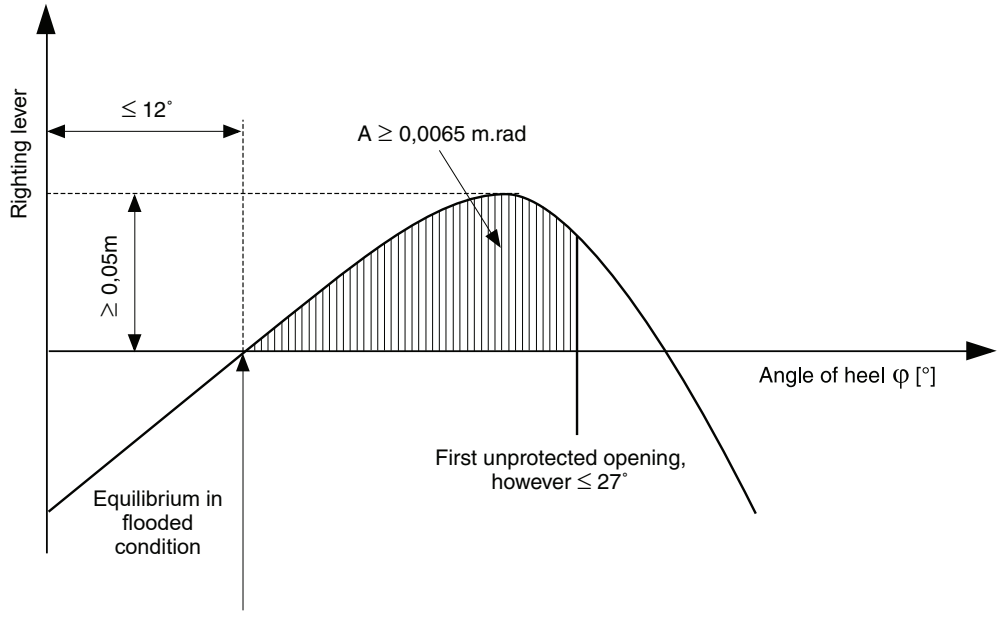

Table 1 : Minimum values of permeability

Spaces	μ, in %
Engine rooms	85
Accommodation spaces	95
Double bottoms, oil fuel tanks, ballast tanks, etc., depending on whether, according to their function, they have to be assumed as full or empty for the vessel floating at the maximum permissible draught	0 or 95

2.3 Damage stability criteria

2.3.1 The damage stability is generally regarded sufficient if (see Fig 1):

- At the stage of equilibrium (in the final stage of flooding), the angle of heel is not greater than 12°.

  Non-weathertight openings shall not be flooded before reaching the stage of equilibrium. If such openings are immersed before the stage of equilibrium, the corresponding spaces shall be considered as flooded for the purpose of stability calculation.
- The positive range of the righting lever curve beyond the stage of equilibrium has a righting lever of ≥ 0,05 m in association with an area under the curve of ≥ 0,0065 m·rad. The minimum values of stability shall be satisfied up to immersion of the first unprotected (non-weathertight) opening and in any event up to an angle of heel ≤ 27°. If non-weathertight openings are immersed before that stage, the corresponding spaces shall be considered as flooded for the purpose of stability calculation.

2.3.2 If openings through which undamaged compartments may additionally become flooded are capable of being closed watertight, the closing appliances shall be marked accordingly.

2.3.3 Where cross- or down-flooding openings are provided for reduction of unsymmetrical flooding, the time of equalisation shall not exceed 15 minutes, provided during the intermediate stages of flooding sufficient stability has been proved.

3 Container vessels

3.1 General

3.1.1 The basic values for the stability calculation - the vessel's lightweight and location of the centre of gravity - shall be determined:

- either by means of an heeling experiment, or
- by detailed mass and moment calculation, in which case the lightweight of the vessel shall be verified by checking the draught, with a tolerance limit of ± 5% between the mass determined by calculation and the displacement determined by the draught readings.

3.1.2

a) Sufficient buoyancy and stability of the vessel in the event of flooding shall be proven with a cargo corresponding to its maximum draught and evenly distributed among all the holds and with maximum supplies and fully fuelled.

b) For diversified cargo, the stability calculation shall be performed for the most unfavourable loading condition.

c) For this purpose, mathematical proof of sufficient stability shall be determined for the intermediate stages of flooding (25%, 50% and 75% of flood build up, and, where appropriate, for the stage immediately prior to transverse equilibrium) and for the final stage of flooding, in the loading conditions specified in item a).

3.2 Assumptions

3.2.1 The following assumptions shall be taken into account for the damaged condition:

a) Extent of side damage:
   - longitudinal extent:

     at least 0,10 L_{OA}
   - transverse extent:

     B_2 – 0,01 m
   - vertical extent:

     from base line upwards without limit.

b) Extent of bottom damage:
   - longitudinal extent:

     at least 0,10 L_{OA}
   - transverse extent:

     3,00 m
   - vertical extent:

     from base line to D_2 – 0,01 m, the sump excepted.

c) Any bulkhead within the damaged area shall be assumed damaged, which means that the subdivision shall be chosen so that the vessel remains afloat after flooding of two or more adjacent compartments in the longitudinal direction.

   For the main engine room only the one-compartment status needs to be taken into account, i.e. the end bulkheads of the engine room shall be assumed as not damaged.

   For bottom damage, adjacent athwartship compartments shall also be assumed as flooded.

d) Permeability

   Permeability μ shall be assumed to be 95%.

   If a calculation proves that the average permeability of a compartment is less than 95%, the calculated value may be used instead.

   However, the values used shall not be less than those stated in Tab 2.

e) The calculation of free surface effect in intermediate stages of flooding shall be based on the gross surface area of the damaged compartments.

Table 2 : Minimum values of permeability

Spaces	μ, in %
Engine and service rooms	85
Cargo holds	70
Double bottoms, fuel tanks, ballast tanks, etc. depending on whether, according to their function, they have to be assumed as full or empty for the vessel floating at the maximum permissible draught	0 or 95

3.3 Damage stability criteria

3.3.1 For all intermediate stages of flooding referred to in [3.1.2], the following criteria shall be met:

a) the heeling angle φ at the equilibrium position of the intermediate stage in question shall not exceed 15° (5° where containers are not secured), see Fig 2

b) beyond the heel in the equilibrium position of the intermediate stage of flooding in question, the positive part of the righting lever curve shall display a righting lever value of GZ ≥ 0,02 m (0,03 m where containers are not secured) before the first unprotected (non-weathertight) opening becomes immersed or a heeling angle φ of 27° is reached (15° where containers are not secured)

c) non-watertight openings shall not be immersed before the heel in the equilibrium position of the intermediate stage in question has been reached.

3.3.2 During the final stage of flooding, the following criteria shall be met:

a) the lower edge of non-watertight openings (e.g., doors, windows, access hatches) shall be not less than 0,10 m above the damaged waterline

b) the heeling angle φ at the equilibrium position shall not exceed 12° (5° where containers are not secured)

c) beyond the heel in the equilibrium position of the intermediate stage of flooding in question, the positive part of the righting lever curve shall display a righting lever value of GZ ≥ 0,05 m and the area under the curve shall reach at least 0,0065 m.rad before the first unprotected opening becomes immersed or a heeling angle φ of 27° (10° where containers are not secured) is reached

d) if non-watertight openings are immersed before the equilibrium position is reached, the rooms affording access shall be deemed flooded for the purposes of the damaged stability calculation.

3.3.3 When cross- or down-flooding openings are provided to reduce unsymmetrical flooding, the time for equalisation shall not exceed 15 minutes, if during the intermediate stages of flooding sufficient damaged stability has been demonstrated.

3.3.4 If openings through which undamaged compartments may additionally become flooded are capable of being closed watertight, the closing appliances shall be marked according to their operating instructions.

3.3.5 Where necessary in order to meet the requirements in [3.1.2], the plane of maximum draught shall be re-established.

Figure 2 : Proof of damage stability for container vessels (final stage of flooding)

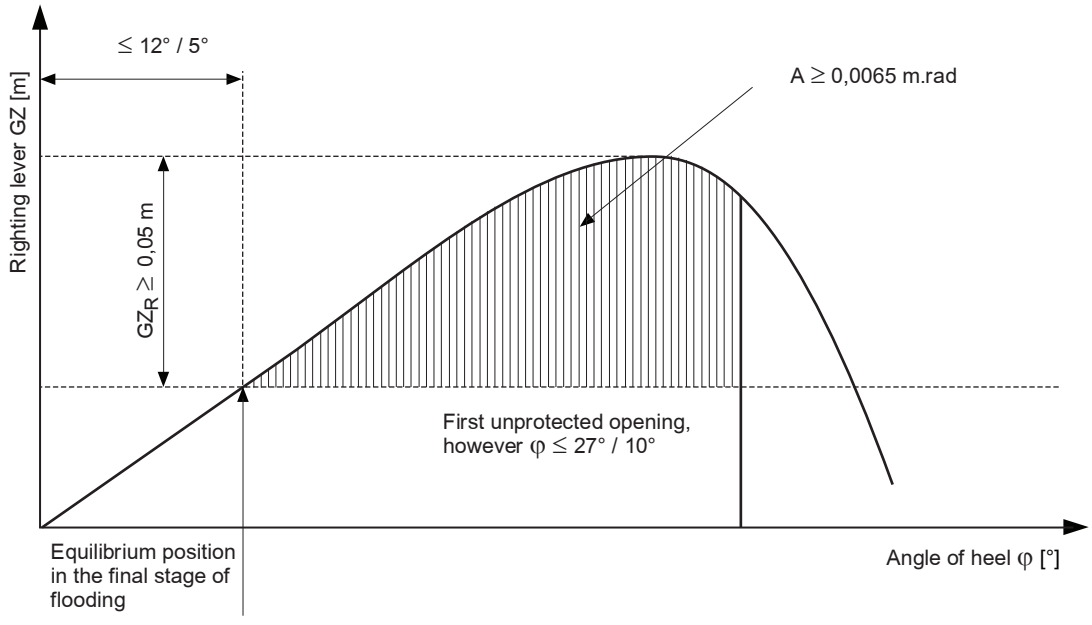

4 Tankers

4.1 Assumptions

4.1.1 The following assumptions shall be taken into consideration for the damaged condition.

a) Extent of side damage:
   - longitudinal extent:
     at least 0,10 L_{OA} but not less than 5,00 m
   - transverse extent:
     B_2 – 0,01 m
   - vertical extent:
     from base line upwards without limit.

b) Extent of bottom damage:
   - longitudinal extent:
     at least 0,10 L_{OA} but not less than 5,00 m
   - transverse extent:
     3,00 m
   - vertical extent:
     from base line to D_2 – 0,01 m, the sump excepted.

c) Any bulkhead within the damaged area shall be assumed damaged, which means that the location of bulkheads shall be chosen so as to ensure that the vessel remains afloat after the flooding of two or more adjacent compartments in the longitudinal direction.
   The following provisions are applicable:
   - for bottom damage, adjacent athwartship compartments shall also be assumed flooded
   - the lower edge of any non-watertight opening (e.g. windows, doors and access hatchways) shall, at the final stage of flooding, be not less than 0,10 m above the damage waterline.

4.1.2 In general, permeability μ shall be assumed to be 95%. Where an average permeability of less than 95% is calculated for any compartment, this calculated value obtained may be used.

However, the values of permeability given in Tab 3 are the minimum values to be used.

For the main engine room only the one-compartment standard need be taken into account, i.e. the end bulkheads of the engine room shall be assumed as not damaged.

Table 3 : Minimum values of permeability

Spaces	μ, in %
Engine rooms	85
Accommodation spaces	95
Double bottoms, oil fuel tanks, ballast tanks, etc., depending on whether, according to their function, they have to be assumed as full or empty for the vessel floating at the maximum permissible draught	0 or 95

4.2 Damage stability criteria

4.2.1 The damage stability is generally regarded sufficient if (see Fig 3):

- At the stage of equilibrium (in the final stage of flooding), the angle of heel is not greater than 12°.

  Non-watertight openings shall not be flooded before reaching the stage of equilibrium. If such openings are immersed before the stage of equilibrium, the corresponding spaces shall be considered as flooded for the purpose of stability calculation.

- The positive range of the righting lever curve beyond the stage of equilibrium has a righting lever of ≥ 0,05 m in association with an area under the curve of ≥ 0,0065 m·rad. The minimum values of stability shall be satisfied up to immersion of the first unprotected (non-weathertight) opening and in any event up to an angle of heel ≤ 27°. If non-weathertight openings are immersed before that stage, the corresponding spaces shall be considered as flooded for the purpose of stability calculation.

4.2.2 If openings through which undamaged compartments may additionally become flooded are capable of being closed watertight, the closing appliances shall be marked accordingly.

4.2.3 Where cross- or down-flooding openings are provided for reduction of unsymmetrical flooding, the time of equalisation shall not exceed 15 minutes, provided during the intermediate stages of flooding sufficient stability has been proved.

Figure 3 : Proof of damage stability

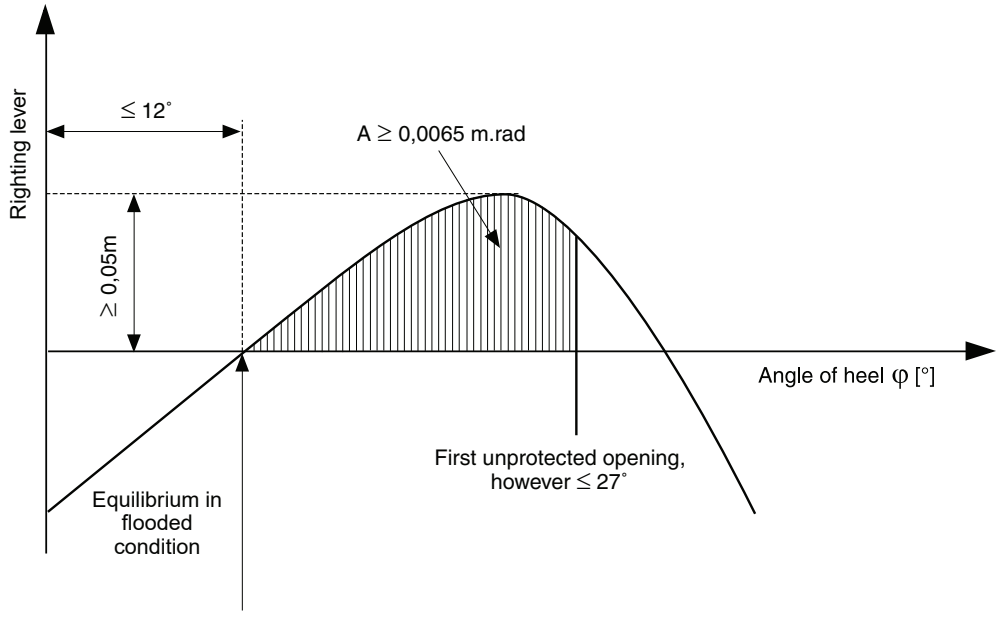

SECTION 7 FIRE

1 General

1.1 Application

1.1.1 Vessels complying with the requirements of this Section are eligible for the assignment of the additional class notation **Fire** as defined in Pt A, Ch 1, Sec 3, [11.9].

These vessels are to comply with the requirements stated under Part C, Chapter 4 and other relevant Sections of Part D.

The requirements of this Section applies to various vessel notations according to Tab 1.

Table 1 : Requirements applicable to vessels

Vessel types	Articles	
	General	Specific
Vessels intended for the carriage of passengers (Passenger vessels, Pleasure vessels **(1)**)	[2]	[3]
Vessels intended for the carriage of dangerous goods (Dry cargo, Tankers)		[4]
Other vessels		[5]
(1) Where intended for the carriage of passengers		

1.2 Documentation to be submitted

1.2.1 In addition to the documentation required in Pt C, Ch 4, Sec 1, [1.4], the following fire protection detail are to be submitted to the Society:

- Structural fire protection, showing the method of construction, purpose and category of the various spaces of the vessels, the fire rating of bulkheads and decks, means of closings of openings in A and B class divisions, draught stops
- Ventilation systems showing the penetrations on A class divisions, location of dampers, means of closing, arrangements of air conditioning rooms
- Protection of stairways and lifts in accommodation and service spaces
- Specifications of material properties with regards to fire protection.

1.3 Definitions

1.3.1 Non-combustible material

"Non-combustible material" is defined in Pt C, Ch 4, Sec 1, [2.14].

1.3.2 A-class divisions

"A-class divisions" is defined in Pt C, Ch 4, Sec 1, [2.2].

1.3.3 B-class divisions

"B-class divisions" is defined in Pt C, Ch 4, Sec 1, [2.3].

1.3.4 Fire divisions other than steel

Fire divisions other than steel are defined in Pt C, Ch 4, Sec 1, [2.4].

Attention is drawn to the use of composite and/or plywood materials from the point of view of structural fire protection. Regulations of the country where the vessel is registered may entail in some cases a limitation in the use of composite and/or plywood materials.

1.3.5 Low flame-spread

"Low flame-spread" is defined in Pt C, Ch 4, Sec 1, [2.9].

1.3.6 Not readily ignitable material

"Not readily ignitable material" is defined in Pt C, Ch 4, Sec 1, [2.15].

1.3.7 Machinery spaces of Category A

"Machinery spaces of Category A" is defined in Pt C, Ch 1, Sec 1, [1.4].

1.3.8 RoRo spaces

Ro-ro spaces are spaces not normally subdivided in any way and normally extending to either a substantial length or the entire length of the vessel in which motor vehicles with fuel in their tanks for their own propulsion and/or goods (packaged or in bulk, in or on rail or road cars, vehicles (including road or rail tankers), trailers, containers, pallets, demountable tanks or in or on similar stowage units or other receptacles) can be loaded and unloaded normally in a horizontal direction.

1.3.9 Special category spaces

Special category spaces are those enclosed vehicle spaces above and below the bulkhead deck, into and from which vehicles can be driven and to which passengers have access. Special category spaces may be accommodated on more than one deck.

2 General provisions

2.1 Determination of fire integrity standards

2.1.1 For the purpose of determining the appropriate fire integrity standard to be applied to boundaries between adjacent spaces, such spaces are classified according to their fire risk described in the following categories.

The title of each category is intended to be typical rather than restrictive.

a) Control centres: defined in Pt C, Ch 4, Sec 1, [2.5]

Wheelhouse, rooms containing the vessel's radio equipment, rooms containing centralised fire alarm equipment, rooms containing centralised emergency public address system stations and equipment, etc.

b) Stairwells: defined in Pt C, Ch 4, Sec 1, [2.19]

Interior stairwells, lifts, enclosed emergency escape trunks. In this connection a stairwell which is enclosed at one level only shall be regarded as part of the space from which it is not separated by a fire door, etc.

c) Muster areas: defined in Pt C, Ch 4, Sec 1, [2.13]

d) Lounges: defined in Pt C, Ch 4, Sec 1, [2.8]

Cabins, public spaces, sale shops, barber shops and beauty parlours, saunas, pantries containing no cooking appliances, small lockers (deck area < 4 m^2), etc.

e) Machinery spaces: defined in Pt C, Ch 4, Sec 1, [2.11]

Main propulsion machinery room, auxiliary machinery spaces, etc.

f) Galleys: defined in Pt C, Ch 4, Sec 1, [2.7]

g) Store rooms: defined in Pt C, Ch 4, Sec 1, [2.21]

Miscellaneous stores, lockers having deck area exceeding 4 m^2, air conditioning rooms.

2.2 Openings in class A and class B divisions

2.2.1 The construction of all doors and door frames in class A and B divisions, with the means of securing them when closed, shall provide resistance to fire as well as to the passage of smoke (only for doors in class A divisions) and flames equivalent to that of the bulkheads in which the doors are fitted.

Such doors and door frames shall be of an approved type.

Watertight doors need not be insulated.

2.2.2 Fire doors in divisions required by Tab 2 and Tab 3 to machinery spaces, to galleys and to staircases shall be of self-closing type.

2.2.3 It shall be possible for each door to be opened and closed from each side of the bulkhead by one person only.

2.2.4 Self-closing doors, which are normally open, shall be capable of remote release from a continuously manned central control station and shall also be capable of release individually from a position at both sides of the door. Status of each fire door (open/ closed position) shall be indicated on the bridge.

2.3 Fire protection materials

2.3.1 Insulation materials shall comply with Pt C, Ch 4, Sec 2, [2.3.1].

2.3.2 Ceilings and linings in accommodation spaces including their substructures shall be of non-combustible material, unless the space is protected with a sprinkler installation.

2.3.3 The following surface materials shall have low flame spread characteristics:

- exposed surfaces in corridors and stairways and of bulkhead and ceiling linings in all spaces, except machinery spaces and store rooms, and
- surfaces and grounds in concealed and inaccessible spaces.

2.3.4 Paints, varnishings and other finishes used on exposed interior surfaces shall not be capable of producing excessive quantities of smoke and toxic gases (see Annex 1, Part 2 of FTP Code).

Note 1: FTP Code means Fire Test Procedures Code, as defined in Pt C, Ch 4, Sec 1, [2.6].

2.3.5 Fabrics, curtains and other hanging textiles (see Annex 1, Part 7 of FTP Code) as well as upholstered furniture (see Annex 1, Part 8 of FTP Code) and bedding components (see Annex 1, Part 9 of FTP Code) shall be fire retardant, unless the spaces are protected with a sprinkler installation. See Note 1 of [2.3.4].

2.3.6 Furniture and fittings in public spaces, which are also assembly station, shall be made of non-combustible material, unless the public spaces are protected with a sprinkler installation.

3 Passenger vessels

3.1 Fire integrity of bulkheads and decks

3.1.1 The minimum fire integrity of all bulkheads and decks shall be as shown in Tab 2 and Tab 3.

3.1.2 The following requirements shall govern the application of the Tables:

- Tab 3 shall apply to spaces in which a sprinkler installation is provided on both sides of bulkheads and deck.
- Tab 2 shall apply to spaces without an installed sprinkler installation.

3.1.3 On passenger vessels assigned additional class notation **Ferry**, the boundary bulkheads and decks of special category spaces and RoRo spaces shall be insulated to A60 class standard. However, where:

- open deck space
- sanitary and similar space, or
- tanks, voids and auxiliary machinery spaces having little or no fire risk,

is on one side of the division, the standard may be reduced to A0.

Where fuel oil tanks are below a special category space or a RoRo space, the integrity of the deck between such spaces may be reduced to A0 standard.

Table 2 : Fire integrity of bulkheads and decks in spaces without sprinkler installation

Spaces	Control centres	Stairwells	Muster areas	Lounges	Machinery spaces of Category A	Galleys	Store rooms
Control centres	–	A0	A0 / B15 **(1)**	A30	A60	A60	A30 / A60 **(5)**
Stairwells		–	A0	A30	A60	A60	A30
Muster areas			–	A30 / B15 **(2)**	A60	A60	A30 / A60 **(5)**
Lounges				– / A0 / B15 **(3)**	A60	A60	A30
Machinery spaces of Category A					A60 / A0 **(4)**	A60	A60
Galleys						A0	A30 / B15 **(6)**
Store rooms							–

(1) Divisions between control centres and internal muster areas shall correspond to type A0, but external muster areas only to type B15.
(2) Divisions between lounges and internal muster areas shall correspond to type A30, but external muster areas only to type B15.
(3) Divisions between cabins, divisions between cabins and corridors and vertical divisions separating lounges according to Ch 1, Sec 6, [3.5.1] shall comply with B15. Divisions between cabins and saunas shall comply with type A0.
(4) Divisions between machinery spaces of Category A shall comply with type A60; in other cases they shall comply with type A0.
(5) Divisions between store rooms for the storage of flammable liquids and control centres and muster areas shall comply with type A60, for rooms fitted with pressurised sprinkler systems A30.
(6) B15 is sufficient for divisions between galleys, on the one hand, and cold-storage rooms and food store rooms, on the other.

Table 3 : Fire integrity of bulkheads and decks in spaces with sprinkler installation

Spaces	Control centres	Stairwells	Muster areas	Lounges	Machinery spaces of Category A	Galleys	Store rooms
Control centres	–	A0	A0 / B15 **(1)**	A0	A60	A30	A0 / A30 **(5)**
Stairwells		–	A0	A0	A60	A30	A0
Muster areas			–	A30 / B15 **(2)**	A60	A30	A0 / A30 **(5)**
Lounges				– / B15 / B0 **(3)**	A60	A30	A0
Machinery spaces of Category A					A60 / A0 **(4)**	A60	A60
Galleys						–	A0 / B15 **(6)**
Store rooms							–

(1) Divisions between control centres and internal muster areas shall correspond to type A0, but external muster areas only to type B15.
(2) Divisions between lounges and internal muster areas shall correspond to type A30, but external muster areas only to type B15.
(3) Divisions between cabins, divisions between cabins and corridors and vertical divisions separating lounges according to Ch 1, Sec 6, [3.5.1] shall comply with B0. Divisions between cabins and saunas shall comply with type B15.
(4) Divisions between machinery spaces of Category A shall comply with type A60; in other cases they shall comply with type A0.
(5) Divisions between store rooms for the storage of flammable liquids and control centres and muster areas shall comply with type A60, for rooms fitted with pressurised sprinkler systems A30.
(6) B15 is sufficient for divisions between galleys, on the one hand, and cold-storage rooms and food store rooms, on the other.

3.2 Means of escape

3.2.1 Dead-end corridors

Dead ends in connecting corridors shall be not longer than 2 m.

3.3 Ventilation systems

3.3.1 They shall be so designed as to prevent the spread of fire and smoke through the system.

3.3.2 The main inlets and outlets of all ventilation system shall be capable of being closed from outside the respective spaces in the event of a fire.

3.3.3 Ducts shall be constructed of steel or other equivalent non-combustible material.

3.3.4 Ducts exceeding 0,02 m^2 and passing through partitions complying with [3.1.1] shall be fitted with fire dampers. The fire dampers shall operate automatically but shall also be capable of being manually closed from both sides of the penetrated division.

3.3.5 Ventilation systems for galleys and machinery spaces shall be independent of the ventilation system serving other spaces.

3.3.6 Exhaust ducts are to be provided with suitably arranged hatches for inspection and cleaning. The hatches shall be located near the fire dampers.

3.3.7 All power ventilation systems shall be capable of being stopped from a central place outside the machinery space.

3.3.8 Galleys have to be provided with separate ventilation systems and exhaust ducts from galley ranges.

Exhaust ducts from galley ranges shall comply with [3.3.1] to [3.3.7] and shall in addition be provided with a manually operated fire damper located in the lower end of the duct.

3.4 Protection of stairways and lifts in accommodation and service spaces

3.4.1 Internal stairs and lifts shall be encapsulated at all levels by walls according to Tab 2 or Tab 3, with effective means of closure for all openings.

3.4.2 The following exceptions are admissible:

a) A staircase connecting only two decks does not need to be encapsulated, if on one of the decks the staircase is enclosed according to Tab 2 or Tab 3.

b) In a lounge, stairs need not be encapsulated if they are located entirely within the interior of this room, and

- if this room extends over only two decks, or
- if there is a pressurised sprinkler system installed in this room on all decks, this room has a smoke extraction system and the room has access on all decks to a stairwell.

4 Vessels intended for the carriage of dangerous goods

4.1 Fire structural integrity

4.1.1 The minimum fire integrity of all bulkheads and decks shall be as shown in Tab 4.

4.1.2 All stairways are to be of steel frame or other non-combustible construction.

Stairways connecting more than two decks are to be enclosed by at least class B bulkheads. Stairways connecting only two decks need to be protected at least at one deck level by class B bulkheads. Doors shall have the same fire resistance as the bulkheads in which they are fitted.

Where class A and B divisions are penetrated for the passage of cables, pipes, trunks, ducts etc. or for the fitting of ventilation terminals, lighting fixtures and similar devices, arrangements shall be made to ensure that the fire resistance is not impaired.

4.1.3 Ventilation system

All parts of the system shall be made of non-combustible material, except that short ducts applied at the end of the ventilation device may be made of a material which has low-flame spread characteristics.

When ventilation ducts with a cross-section of more than 0,02 m^2 are passed through partitions according to [4.1.1] of type A, they shall be fitted with approved fire dampers which can be operated from a location permanently manned by shipboard personnel or crew members.

Table 4 : Fire integrity of bulkheads and decks

Spaces	Control centres	Stairwells	Muster areas	Lounges	Machinery spaces of Category A	Galleys	Store rooms
Control centres	–	A0	A0 / B0 **(1)**	B0	A30	A0	A0
Stairwells		–	A0	B0	A30	A0	A0
Muster areas			–	A0 / B0 **(2)**	A30	A0	A0
Lounges				– / B0 **(3)**	A30	A0	A0
Machinery spaces of Category A					A30 / A0 **(4)**	A15	A0
Galleys						–	A0 / B0 **(5)**
Store rooms							–

(1) Divisions between control centres and internal muster areas shall correspond to type A0, but external muster areas only to type B0.
(2) Divisions between lounges and internal muster areas shall correspond to type A0, but external muster areas only to type B0.
(3) Divisions between cabins, divisions between cabins and corridors and vertical divisions separating lounges according to Ch 1, Sec 6, [3.5.1] shall comply with B0.
(4) Divisions between machinery spaces of Category A shall comply with type A30; in other cases they shall comply with type A0.
(5) B0 is sufficient for divisions between galleys, on the one hand, and cold-storage rooms and food store rooms, on the other.

5 Other vessels

5.1 Fire structural integrity

5.1.1 The minimum fire structural integrity shall comply with [4.1].

5.2 Fire fighting

5.2.1 Fixed gas fire extinguishing systems

Machinery spaces containing internal combustion engines and oil fired boilers shall be provided with a fixed gas fire extinguishing system in compliance with Pt C, Ch 4, Sec 4, [4].

SECTION 8 UNATTENDED MACHINERY SPACES (AUT-UMS)

1 General

1.1 Application

1.1.1 The additional class notation **AUT-UMS** is assigned in accordance with Pt A, Ch 1, Sec 3, [11.2] to vessels fitted with automated installations enabling periodically unattended operation of machinery spaces, and complying with the requirements of this Section.

Machinery spaces are defined in Pt C, Ch 1, Sec 1, [1.5].

1.1.2 Applicable requirements stated under Part C, Chapter 3, are to be complied with too.

1.1.3 The arrangements provided shall be such as to ensure that the safety of the vessel in all sailing conditions, including manoeuvring, is equivalent to that of a vessel having the machinery spaces manned.

1.2 Exemptions

1.2.1 To vessels whose deadweight is less than 500 t, the requirements of [6.4.3] do not apply.

1.2.2 For cargo carriers, the Society may wave the requirements laid down in [3.3.1], insofar as the arrangements of the machinery space access make it unnecessary.

1.3 Communication system

1.3.1 A reliable means of vocal communication shall be provided between the main machinery control room or the propulsion machinery control position as appropriate, the navigation bridge and the engineer officers' accommodation.

This means of communication is to be foreseen in collective or individual accommodation of engineer officers.

1.3.2 Means of communication are to be capable of being operated even in the event of failure of supply from the main source of electrical power.

1.4 Monitoring and control of equipment

1.4.1 Monitoring and control of unattended machinery space equipment is to be performed according to Tab 2.

2 Documentation

2.1 Documents to be submitted

2.1.1 In addition to those mentioned in Pt B, Ch 2, Sec 1, [2], the documents in Tab 1 are required for review.

Table 1 : Documents to be submitted

No.	Document
1	Means of communication diagram
2	Technical description of automatic engineer's alarm and connection of alarms to accommodation and wheelhouse, when applicable
3	System of protection against flooding
4	Fire detection system: diagram, location and cabling

3 Fire precautions

3.1 Fire prevention

3.1.1 For arrangements of remote stop, the requirements in Pt C, Ch 4, Sec 2, [2.1] are applicable.

3.2 Fire detection

3.2.1 An automatic fire detection system is to be fitted in machinery spaces intended to be unattended.

3.2.2 The fire detection system is to be designed with self-monitoring properties. Power or system failures are to initiate an audible alarm distinguishable from the fire alarm.

3.2.3 The fire detection indicating panel is to be located in the wheelhouse, fire control station or other accessible place where a fire in the machinery space will not render it inoperative.

3.2.4 The fire detection indicating panel is to indicate the place of the detected fire in accordance with the arranged fire zones by means of a visual signal. Audible signals clearly distinguishable in character from any other signals are to be audible throughout the wheelhouse and the accommodation area of the personnel responsible for the operation of the machinery space.

3.2.5 Fire detectors are to be of such type and so located that they will rapidly detect the onset of fire in conditions normally present in the machinery space. The type and location of detectors are to be approved by the Society and a combination of detector types is recommended in order to enable the system to react to more than one type of fire symptom.

3.2.6 Except in spaces of restricted height and where their use is specially appropriate, detection systems using thermal detectors only are not permitted. Flame detectors may be installed, although they are to be considered as complementary and are not to replace the main installation.

3.2.7 Fire detector zones are to be arranged in a manner that will enable the operating staff to locate the seat of the fire. The arrangement and the number of loops and the location of detector heads are to be approved in each case. Air currents created by the machinery are not to render the detection system ineffective.

3.2.8 When fire detectors are provided with the means to adjust their sensitivity, necessary arrangements are to be allowed to fix and identify the set point.

3.2.9 When it is intended that a particular loop or detector is to be temporarily switched off, this state is to be clearly indicated. Reactivation of the loop or detector is to be performed automatically after a preset time.

3.2.10 The fire detection indicating panel is to be provided with facilities for functional testing.

3.2.11 The fire detection system is to be fed automatically from the emergency source of power by a separate feeder if the main source of power fails.

3.2.12 Facilities are to be provided in the fire detecting system to manually release the fire alarm from the following places:

- passageways having entrances to machinery spaces
- the wheelhouse
- the control station in the machinery space.

3.3 Fire fighting

3.3.1 Unless otherwise stated, pressurisation of the fire main at a suitable pressure by starting a main fire pump and carrying out the other necessary operations is to be possible from the wheelhouse. Alternatively, the fire main system may be permanently under pressure.

4 Flooding precautions

4.1 Protection against flooding

4.1.1 Bilge wells or machinery spaces bilge levels are to be monitored in such a way that the accumulation of liquid is detected in normal angles of trim and heel, and are to be large enough to accommodate easily the normal drainage during the unattended period.

4.1.2 Bilge level alarms are to be given at the main control station and the wheelhouse.

4.1.3 Alarm is to be given to the wheelhouse in case of flooding into the machinery space situated below the load line, in compliance with Tab 2.

5 Machinery

5.1 General

5.1.1 Under all sailing conditions, including manoeuvring, the speed, direction of thrust and, if applicable, the pitch of the propeller shall be fully controllable from the wheelhouse.

5.1.2 All manual operations or services expected to be carried out with a periodicity of less than 24 h are to be eliminated or automated, particularly for: lubrication, toping up of make up tanks and filling tanks, filter cleaning, cleaning of centrifugal purifiers, drainage, load sharing on main engines and various adjustments. Nevertheless, the transfer of operation mode may be effected manually.

5.1.3 A centralised control position shall be arranged with the necessary alarm panels and instrumentation indicating any alarm.

5.1.4 Parameters for essential services which need to be adjusted to a preset value are to be automatically controlled.

5.1.5 The control system shall be such that the services needed for the operation of the main propulsion machinery and its auxiliaries are ensured through the necessary automatic arrangements.

5.1.6 It shall be possible for all machinery essential for the safe operation of the vessel to be controlled from a local position, even in the case of failure in any part of the automatic arrangements.

5.1.7 The design of the remote automatic control system shall be such that, in the case of its failure, an alarm will be given. Unless impracticable, the preset speed and direction of thrust of the propeller shall be maintained until local control is in operation.

5.1.8 Critical speed ranges, if any, are to be rapidly passed over by means of an appropriate automatic device.

5.1.9 Propulsion machinery is to stop automatically only in exceptional circumstances which could cause quick critical damage, due to internal faults in the machinery. The design of automation systems whose failure could result in an unexpected propulsion stop is to be specially examined. An overriding device for canceling the automatic shutdown is to be considered.

5.1.10 Where the propulsive plant includes several main engines, a device is to be provided to prevent any abnormal overload on each of them.

5.1.11 Where standby machines are required for other auxiliary machinery essential to propulsion, automatic change-over devices shall be provided.

5.2 Control of machinery

5.2.1 Monitoring and control of machinery equipment is to be performed according to Tab 2.

Table 2 : Monitoring and control of machinery installations

Symbol convention H = High, HH = Very high, L = Low I = Individual alarm, G = Group alarm		Monitoring				
Identification of system parameter		Alarms	Indication local	Alarms wheelhouse **(4)**	Indication wheelhouse	Shut down
MAIN ENGINE						
Engine speed	All engines		x		x	
	Engine power > 220kW	HH	x	I		x
Shaft revolution indicator			x		x	
Lubricating oil pressure		L	x	G	x	
Lubricating oil temperature		H	x	G		
Fresh cooling water system inlet pressure **(1)**		L	x	G		
Fresh cooling water system outlet temperature **(1)**		H	x	G		
Fuel oil temperature for engines running on HFO		L	x	G		
Exhaust gas temperature (single cylinder when the dimensions permit)			x			
Starting air pressure		L	x	I	x	
Charge air pressure			x			
Control air pressure			x		x	
Exhaust gas temperature at turbocharger inlet/outlet (where the dimensions permit)			x			
Manual emergency stop of propulsion		x	x		x	x **(3)**
Fault in the electronic governor		x	x	G		
REDUCTION GEAR						
Tank level			x		x	
Lubricating oil temperature			x			
Lubricating oil pressure			x		x	
AUXILIARY MACHINE (2)						
Engine speed	All engines		x		x	
	Engine power > 220 kW	HH	x	I	x	x
Low pressure cooling water system **(1)**		L	x	G		
Fresh cooling water system outlet temperature **(1)**		H	x	G		
Lubricating oil pressure		L	x	G		
Fault in the electronic governor		x	x	G		
DIESEL BOW THRUSTER (2)						
Engine speed	All engines		x		x	
	Engine power > 220 kW	HH	x	G	x	x
Low pressure cooling water system **(1)**		L	x	G		
Fresh cooling water system outlet temperature **(1)**		H	x	G		
Direction of propulsion			x		x	
Lubricating oil pressure		L	x	G		
Lubricating oil temperature			x			
Fault in the electronic governor		x	x	G		
PROPULSION						
Propulsion remote control ready			x		x	
Pitch control			x		x	
ELECTRICITY						
Earth fault (when insulated network)		x	x	G		
Main supply power failure		x	x	G		

Symbol convention H = High, HH = Very high, L = Low I = Individual alarm, G = Group alarm	Monitoring				
Identification of system parameter	Alarms	Indication local	Alarms wheelhouse **(4)**	Indication wheelhouse	Shut down
FUEL OIL TANKS					
Fuel oil level in service tank or tanks supplying directly services essential for safety or navigation	L	x	G		
STEERING GEAR					
Rudder angle indicator		x		x	
Level of each hydraulic fluid	L	x	I	x	
Indication that electric motor of each power unit is running		x		x	
Failure of rate of turn control	x		I	x	
Overload failure	x	x	I	x	
Phase failure	x	x	I	x	
Loss of power supply	x	x	I	x	
Loss of control supply	x	x	I	x	
STEAM BOILER					
Water level	L+H	x			
	LL				x
Circulation stopped (when forced circulation boiler)	x				x
Flame failure	x				x
Temperature in boiler	H				
Steam pressure	HH	x			x
THERMAL OIL					
Thermal fluid temperature heater outlet	H	x			x **(5)**
Thermal fluid pressure pump discharge	H	x			x
Thermal fluid flow through heating element	L	x			
	LL				x **(5)**
Expansion tank level	L	x			
	LL				x **(6)**
Expansion tank temperature	H				
Forced draft fan stopped	x				x
Burner flame failure	x				x
Flue gas temperature heater outlet	H				
	HH				x **(6)**
FIRE					
Fire detection	x			x	
Fire manual call point	x			x	
Automatic fixed fire extinguishing system activation, if fitted	x			x	
FLOODING					
Level of machinery space bilges/drain wells	x			x	
ALARM SYSTEM					
Alarm system power supply failure	x	x		x	

(1) A combination of level indication/alarm in expansion tank and indication/alarm cooling water temperature can be considered as equivalent with consent of the Society.
(2) Exemptions can be given for diesel engines with a power of 50 kW and below.
(3) Openings of clutches can, with the consent of the Society, be considered as equivalent.
(4) Group of alarms are to be detailed in the machinery space or control room (if any).
(5) Shut-off of heat input only.
(6) Stop of fluid flow and shut-off of heat input.

6 Alarm system

6.1 General

6.1.1 A system of alarm displays and controls is to be provided which readily allows identification of faults in the machinery and satisfactory supervision of related equipment. This may be arranged at a main control station or, alternatively, at subsidiary control stations. In the latter case, a master alarm display is to be provided at the main control station showing which of the subsidiary control stations is indicating a fault condition.

6.1.2 Unless otherwise justified, separation of monitoring and control systems is to be provided.

6.1.3 The alarm system is to be designed to function independently of control and safety systems, so that a failure or malfunction of these systems will not prevent the alarm system from operating. Common sensors for alarms and automatic slowdown functions may be accepted in specific cases.

6.1.4 The alarm system shall be continuously powered and shall have an automatic change-over to a standby power supply in the case of loss of normal power supply.

6.2 Alarm system design

6.2.1 The alarm system and associated sensors are to be capable of being tested during normal machinery operation.

6.2.2 Insulation faults on any circuit of the alarm system are to generate an alarm, when an insulated earth distribution system is used.

6.2.3 An engineer's alarm is to be activated when the machinery alarm has not been accepted in the machinery spaces or control room within 5 minutes.

6.3 Machinery alarm system

6.3.1 The local silencing of the alarms in the wheelhouse or in accommodation spaces is not to stop the audible machinery space alarm.

6.3.2 Machinery faults are to be indicated at the control locations for machinery.

6.4 Alarm system in wheelhouse

6.4.1 Alarms associated with faults requiring speed reduction or automatic shutdown are to be separately identified in the wheelhouse.

6.4.2 The alarm system is to activate an audible and visual alarm in the wheelhouse for any situation which requires action by or the attention of the officer on watch.

6.4.3 Individual alarms are to be provided in the wheelhouse indicating any power supply failures of the remote control of propulsion machinery.

7 Safety system

7.1 General

7.1.1 Safety systems of different units of the machinery plant are to be independent. Failure in the safety system of one part of the plant is not to interfere with the operation of the safety system in another part of the plant.

7.1.2 In order to avoid undesirable interruption in the operation of machinery, the system is to intervene sequentially after the operation of the alarm system by:

- starting of standby units
- load reduction or shutdown, such that the least drastic action is taken first.

7.1.3 The arrangement for overriding the shutdown of the main propelling machinery is to be such as to preclude inadvertent operation.

7.1.4 After stoppage of the propulsion engine by a safety shutdown device, the restart is only to be carried out, unless otherwise justified, after setting the propulsion wheelhouse control level on "stop".

8 Testing

8.1 General

8.1.1 The tests of automated installations are to be carried out according to Pt C, Ch 3, Sec 6 to determine their operating conditions. The details of these tests are defined, in each case, after having studied the concept of the automated installations and their construction. A complete test program is to be submitted for approval.

SECTION 9 ANNUAL SURVEY

1 General

1.1 Application

1.1.1 The additional class notation **Annual survey** is assigned in accordance with Pt A, Ch 1, Sec 3, [11.1] to vessels submitted to annual survey and intermediate survey complying with the requirements of this Section. This Section applies in addition to the applicable provisions of Pt A, Ch 3, Sec 3 to Pt A, Ch 3, Sec 9.

1.1.2 Annual survey

Vessels assigned with the additional class notation **Annual survey** are to be submitted to annual survey in compliance with [2], carried out within three months before or after each anniversary date.

1.1.3 Intermediate survey

In addition to all the inspections and checks required for annual surveys, the intermediate survey is to be carried out in compliance with [3], within the window from three months before the second to three months after the third anniversary date.

The intermediate survey is not applicable to vessels with character of class **II**.

1.1.4 Owners are reminded that, in compliance with the requirements in Pt A, Ch 2, Sec 2, [10.2], any modification to the vessel's hull and equipment affecting its classification is to be made known to the Society.

1.2 Links between anniversary dates and annual surveys, intermediate surveys and class renewal surveys

1.2.1 The link between the anniversary dates, the class renewal survey and the annual and intermediate surveys is given in Fig 1.

2 Annual survey

2.1 General

2.1.1 At the time of annual surveys, the vessel is to be generally examined. The survey is to include a visual inspection of the hull and hull equipment of the vessel and some tests thereof, so far as necessary and practicable in order to verify that the vessel is in a satisfactory and efficient general condition and is properly maintained.

2.2 Hull - General requirement

2.2.1 The main structural elements of the hull are to be subjected to a general visual inspection, as far as accessible. If applicable, ballast tank, storage and engine rooms are to be surveyed at random, depending on the vessel type, age and general condition. Where damages or excessive wastage affecting the class are suspected, the Surveyor is entitled to carry out further investigations as well as thickness measurements, if required.

2.2.2 The rudder and manoeuvring arrangement and the anchor equipment are to be checked for visible damages. For the related machinery and for operability, see Pt A, Ch 3, Sec 2, [4.1.1].

Figure 1 : Links between anniversary dates and annual, intermediate and class renewal surveys

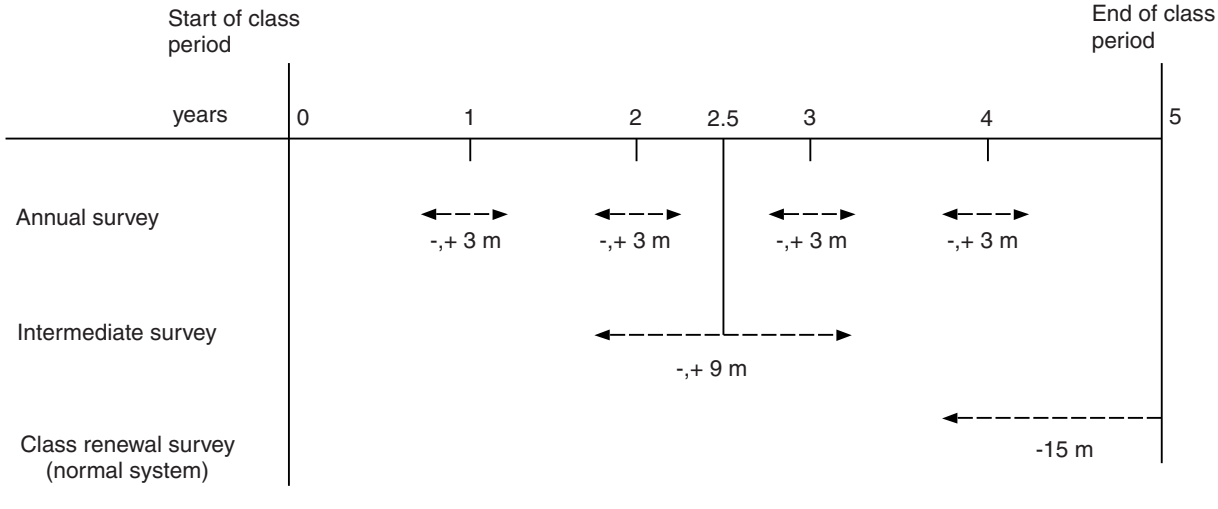

2.2.3 The foundations and their substructure of special equipment, particularly on the upper deck, shall be inspected for damages.

2.2.4 Compartments and rooms normally not accessible, or accessible only after special preparations, may be required to be opened for inspection, depending on the vessel's age and available information about service conditions.

2.3 Ballast tanks

2.3.1 Depending on the vessel's age, the Surveyor may require opening of ballast tanks for visual inspection, particularly if deterioration of the coating or excessive wastage has already been observed at previous surveys.

If coating is to be partly or totally renewed, only approved coating is applicable in case of a repair. The whole working procedure including the surface preparation has to be documented.

2.4 Hatches and covers, bow, side and stern doors

2.4.1 Hatches and covers, bulkhead and hull doors, ramps and any openings in the outer shell shall be surveyed regarding structural integrity as well as tightness and operability of all closures.

2.4.2 Additionally to the overall survey the following structural members of bow, side and stern doors are to be thoroughly inspected:

- all hinges and the pertinent hydraulic cylinders in way of their securing points
- all securing elements of the locking devices and stoppers.

2.4.3 Where considered necessary by the Surveyor, additionally crack tests shall be carried out at structural members of bow, side and stern doors.

Essentially, the crack tests will cover:

- main joining welds and their interfacial areas both on the vessel's hull and on the doors
- highly stressed areas in way of the centres of rotation of the hinges
- highly stressed areas of the locking devices and their stoppers
- repair welding.

For crack detection the dye penetration method or the magnetic particle inspection method shall be employed, and a test protocol is to be prepared.

2.5 General machinery installations

2.5.1 The survey of general machinery installations is to cover the following items:

- general examination of machinery and boiler spaces with particular attention to the fire and explosion hazards; confirmation that emergency escape routes are practicable and not blocked
- general examination of the machinery, steam, hydraulic, pneumatic and other systems and their associated fittings, for confirmation of their proper maintenance
- testing of the means of communication and order transmission between the navigating bridge and the machinery control positions and other control stations
- confirmation that the rudder angle indicator on the bridge is in working order
- examination, as far as practicable, of the bilge pumping systems and bilge wells, including operation of the pumps, remote reach rods and level alarms, where fitted
- visual examination of the condition of any expansion joints in river water systems
- external examination of pressure vessels other than boilers and their appurtenances, including safety devices, foundations, controls, relieving gear, high pressure piping, insulation and gauges.

2.5.2 When the vessel is equipped with a refrigerating plant (whether or not covered by an additional class notation), the annual survey is to include the external examination of:

- pressure vessels of the installation to the same extent as indicated in [2.5.1]
- refrigerant piping, as far as practicable
- for refrigerating machinery spaces using ammonia as refrigerant:
  - ventilation system including functional test
  - water-spraying fire-extinguishing system; see [2.8.2] item d)
  - bilge system including functional test
  - electrical equipment, confirming its proper maintenance
  - gas detection system
  - breathing apparatus and protective clothing.

2.5.3 When the vessel is equipped with thruster installations, the annual survey is to include:

- an external examination of the machinery installation
- an operating test of the complete installation.

2.6 Boilers

2.6.1 For main and auxiliary boilers, the annual survey consists of an external examination of boilers and their appurtenances, including safety devices, foundations, controls, relieving, high pressure and steam escape piping, insulation and gauges.

2.6.2 For thermal oil heaters, a functional test while in operation is to be carried out, during which the following items are checked:

- the heater for detection of leakages
- the condition of the insulation
- the operation of indication, control and safety devices
- the condition of remote controls for shut-off and discharge valves.

A satisfactory analysis of the quality of oil is to be made available to the Surveyor.

2.6.3 For exhaust gas thermal oil heaters, in addition to the requirements of [2.6.2], a visual examination and a tightness testing to the working pressure of the heater tubes are to be carried out.

2.7 Electrical machinery and equipment

2.7.1 The survey of electrical machinery and equipment is to cover the following items:

- general examination, visually and in operation, as feasible, of the electrical installations for power and lighting, in particular main and emergency generators, electric motors, switchboards, switchgears, cables and circuit protective devices, indicators of electrical insulation and automatic starting, where provided, of emergency sources of power
- checking, as far as practicable, the operation of emergency sources of power and, where they are automatic, also including the automatic mode.

2.7.2 The survey is also to cover the bridge control of propulsion machinery, and related arrangements (alarms and safety devices), when fitted.

2.8 Fire protection, detection and extinction

2.8.1 The survey of fire prevention and other general arrangements is to cover the following items:

- examination and testing, as feasible, of the operation of manual and/or automatic fire doors, where fitted
- checking, as far as practicable, that the remote controls for stopping fans and machinery and shutting off fuel supplies in machinery spaces and, where fitted, the remote controls for stopping fans in accommodation spaces and the means of cutting off power to the galley are in working order
- examination of the closing arrangements of ventilators, funnel annular spaces, skylights, doorways and tunnel, where applicable
- examination, as far as practicable, and testing, as feasible and at random, of the fire and/or smoke detection systems.

2.8.2 The operational readiness and maintenance of fire fighting systems is to be checked. The survey requirements for all types of fire-fighting systems that are usually found on board vessels related either to machinery spaces or to cargo areas and/or spaces or to accommodation spaces, irrespective of the service notation assigned, are the following:

a) Water fire system
   - examination of the fire main system and confirmation that each fire pump including the emergency fire pump can be operated separately so that the two required powerful jets of water can be produced simultaneously from different hydrants, at any part of the vessel whilst the required pressure is maintained in the fire main
   - checking that fire hoses, nozzles, applicators, spanners and international shore connection (where fitted) are in satisfactory working condition and situated at their respective locations

b) Fixed gas fire-extinguishing system
   - external examination of receivers of CO_2 (or other gas) fixed fire-extinguishing systems and their accessories, including the removal of insulation for insulated low pressure CO_2 containers
   - examination of fixed fire-fighting system controls, piping, instructions and marking; checking for evidence of proper maintenance and servicing, including date of last system tests
   - test of the alarm triggered before the CO_2 is released

c) Sprinkler system
   - examination of the system, including piping, valves, sprinklers and header tank
   - test of the automatic starting of the pump activated by a pressure drop
   - check of the alarm system while the above test is carried out

d) Water-spraying system
   - examination of the system, including piping, nozzles, distribution valves and header tank
   - test of the starting of the pump activated by a pressure drop (applicable only for machinery spaces)

e) Fixed foam systems (low or high expansion)
   - examination of the foam system
   - test to confirm that the minimum number of jets of water at the required pressure in the fire main is obtained when the system is in operation
   - checking the supplies of foam concentrate and receiving confirmation that it is periodically tested (not later than three years after manufacture and annually thereafter) by the manufacturer or an agent

f) Dry powder system
- examination of the dry powder system, including the powder release control devices
- checking the supplies of powder contained in the receivers and that it has maintained its original smoothness
- checking that the pressure of propelling inert gas contained in the relevant bottles is satisfactory.

2.8.3 As far as other fire-fighting equipment is concerned, it is to be checked that:
- semi-portable and portable fire extinguishers and foam applicators are in their stowed positions, with evidence of proper maintenance and servicing, and detection of any discharged containers
- firemen's outfits are complete and in satisfactory condition.

3 Intermediate survey

3.1 General

3.1.1 The intermediate survey is to include examination and checks on a sufficiently extensive part of the structure to show that the structures of the vessel are in satisfactory condition so that the vessel is expected to operate until the end of the current period of class, provided that the vessel is properly maintained and other surveys for maintenance of class are duly carried out during this period.

3.2 Hull

3.2.1 The requirements given in Tab 1 for the survey and testing of water ballast spaces, cargo holds and cargo tanks are to be complied with.

Table 1 : Intermediate survey of hull

ITEM	Age of vessel (in years at time of intermediate survey)		
	5 < age ≤ 10	10 < age ≤ 15	age > 15
WATER BALLAST SPACES	Representative spaces internally examined Thickness measurements, if considered necessary by the Surveyor See **(1) (2) (3)**	All spaces internally examined Thickness measurements, if considered necessary by the Surveyor See **(1) (3)**	All spaces internally examined Thickness measurements, if considered necessary by the Surveyor Tightness of inner bottom plating of cargo holds in way of double bottom water ballast tanks checked, if considered necessary by the Surveyor See **(1) (3)**
CARGO HOLDS			Selected cargo holds internally examined
CARGO TANKS		Selected cargo tanks internally examined	Selected cargo tanks internally examined

(1) If such examinations reveal no visible structural defects, the examination may be limited to a verification that the corrosion prevention system remains effective.

(2) If there is no hard protective coating, soft coating or poor coating condition, the examination is to be extended to other ballast spaces of the same type.

(3) For water ballast spaces, if there is no hard protective coating, soft coating or poor coating condition and it is not renewed, the spaces in question are to be internally examined at annual intervals.

Note 1: Due attention is also to be given to fuel oil piping passing through ballast tanks, which is to be pressure tested should doubts arise.

SECTION 10 GRABLOADING

1 General

1.1 Application

1.1.1 The additional class notation **Grabloading** is assigned, in accordance with Pt A, Ch 1, Sec 3, [11.10.1] to bulk cargo vessels with holds specially reinforced for loading/unloading cargoes by means of buckets or grabs and complying with the requirements of this Section.

2 Scantlings

2.1 General

2.1.1 The net scantlings of plating and structural members within the cargo hold obtained from Ch 1, Sec 2 are to be increased in compliance with [2.2] and [2.3].

2.2 Inner bottom

2.2.1 The net scantlings of inner bottom plating and longitudinals, where no continuous wooden ceiling is fitted, obtained from Ch 1, Sec 2 are to be reinforced as follows:

- inner bottom plating net thickness is to be increased by 2 mm
- inner bottom longitudinal net section modulus is to be increased 1,4 times.

2.3 Hold sides and bulkheads

2.3.1 The net thicknesses of:

- hold side plating up to 1,5 m from the inner bottom
- hold bulkhead plating up to 1,5 m from the inner bottom,

are to be increased by 1,5 mm.

2.3.2 The net section modulus of:

- hold side secondary stiffeners up to 1,5 m from the inner bottom
- hold bulkhead secondary stiffeners up to 1,5 m from the inner bottom,

is to be increased 1,4 times.

2.3.3 Above 1,5 m from the inner bottom, the net scantlings of plating and structural members may be tapered to those obtained from Ch 1, Sec 2.

SECTION 11 POLLUTION PREVENTION

1 Scope and application

1.1 General

1.1.1 This Section contains the requirements for the prevention of water and air pollution.

1.1.2 Additional class notations for the prevention of water and air pollution include:

- **Cleanvessel**
- other notations having a specific scope.

The relevant symbol, scope, reference to the Rules and assignment conditions are given in Tab 1.

Examples of notations:

- **Cleanvessel**
- **OWS-5 ppm**
- **AWT**, **NDO-2 days**

1.1.3 Requirements for onboard surveys are given in Article [4] and in Pt A, Ch 3, Sec 9, [3].

1.2 Applicable rules and regulations

1.2.1 Additional requirements may be imposed by the vessel flag Authorities and/or by the State or Port Administration in the jurisdiction of which the vessel is intended to operate, in particular with respect to:

- exhaust gas smoke (particulate emissions, smoke opacity)
- fuel oil sulphur content
- bilge water oil content
- on board waste incineration.

2 Definitions and abbreviations

2.1 Definitions related to water pollution

2.1.1 Hazardous wastes

Hazardous wastes are those wastes composed of substances which are identified as water pollutants in the European Agreement concerning the International Carriage of Dangerous Goods (ADN).

Hazardous wastes include in particular:

- photo processing chemicals
- dry cleaning waste
- used paints
- solvents
- heavy metals
- expired chemicals and pharmaceuticals
- waste from printers
- hydrocarbons and chlorinated hydrocarbons
- used fluorescent and mercury vapour light bulbs
- batteries.

Note 1: Empty packagings previously used for the carriage of hazardous substances are to be considered as hazardous substances.

2.1.2 Wastewater

Wastewater includes both sewage and grey water defined hereunder.

2.1.3 Sewage

Sewage means:

- drainage and other wastes from any form of toilets, urinals, and WC scuppers, here designated as black waters
- drainage from medical premises (dispensary, sick bay, etc.) via wash basins, wash tubs and scuppers located in such premises
- drainage from spaces containing live animals, or
- other waste waters when mixed with the drainages defined above.

2.1.4 Sewage sludge

Sewage sludge means any solid, semi-solid, or liquid residue removed during the treatment of on-board sewage.

2.1.5 Grey water

Grey water includes drainage from dishwashers, showers, sinks, baths and washbasins, laundry and galleys.

2.1.6 Garbage

Garbage means all kinds of victual, domestic and operational waste excluding fresh fish and parts thereof, generated during the normal operation of the vessel.

Garbage includes all kinds of solid wastes like plastics, paper, oily rags, glass, metal, bottles, and incinerator ash. Food wastes are considered as garbage.

2.1.7 Oil residue (sludge)

Oil residue (sludge) means the residual waste oil products generated during the normal operation of a vessel such as those resulting from the purification of fuel or lubricating oil for main or auxiliary machinery, separated waste oil from oil filtering equipment, waste oil collected in drip trays, and waste hydraulic and lubricating oils.

Table 1 : Additional class notations for the prevention of pollution

Symbol	Scope	Reference in Part A	Applicable Rules	Assignment conditions
Cleanvessel	Prevention of sea and air pollution	Pt A, Ch 1, Sec 3, [11.15.2]	NR467, Pt F, Ch 9, Sec 2, [2]	
AWT	Fitting of an advanced wastewater treatment plant	Pt A, Ch 1, Sec 3, [11.15.3]	NR467, Pt F, Ch 9, Sec 3, [2]	
GREEN PASSPORT	Hazardous material inventory	Pt A, Ch 1, Sec 3, [11.15.4]	NR528	
GWT	Fitting of a treatment installation for Grey Waters	Pt A, Ch 1, Sec 3, [11.15.5]	NR467, Pt F, Ch 9, Sec 3, [5]	
NDO-x days	The ship is designed for No Discharge Operation during x days	Pt A, Ch 1, Sec 3, [11.15.6]	NR467, Pt F, Ch 9, Sec 3, [6]	
NOX-x%	Average NOx emissions of engines not exceeding x% of IMO Tier II limit	Pt A, Ch 1, Sec 3, [11.15.7]	NR467, Pt F, Ch 9, Sec 3, [7]	
OWS-x ppm	Fitting of an Oily Water Separator producing effluents having a hydrocarbon content not exceeding x ppm (parts per million)	Pt A, Ch 1, Sec 3, [11.15.8]	NR467, Pt F, Ch 9, Sec 3, [8]	
SOX-x%	Oil fuels used within and outside SECAs have a sulphur content not exceeding x% of the relevant IMO limit	Pt A, Ch 1, Sec 3, [11.15.9]	NR467, Pt F, Ch 9, Sec 3, [9]	As an alternative, equivalent arrangements (e.g. exhaust gas cleaning systems) may be accepted

2.1.8 Oil residue (sludge) tank

Oil residue (sludge) tank means a tank which holds oil residue (sludge) from which sludge may be disposed directly through the standard discharge connection or any other approved means of disposal.

2.1.9 Oily bilge water

Oily bilge water means water which may be contaminated by oil resulting from things such as leakage or maintenance work in machinery spaces. Any liquid entering the bilge system including bilge wells, bilge piping, tank top or bilge holding tanks is considered oily bilge water.

2.1.10 Oily bilge water holding tank

Oily bilge water holding tank means a tank collecting oily bilge water prior to its discharge, transfer.

2.1.11 Oily wastes

Oily wastes means oil residues (sludge) and oily bilge water.

2.1.12 Advanced Wastewater Treatment (AWT)

Advanced wastewater treatment means any treatment of wastewater that goes beyond the secondary or biological water treatment stage and includes the removal of nutrients such as phosphorus and nitrogen and a high percentage of suspended solids. AWT water effluent standard corresponds to the technology currently available for municipal wastewater treatment plants.

2.1.13 Accidental discharge

Accidental discharge is all discharge to water caused by unforeseen or accidental events, such as damage to the vessel or its equipment, and includes discharge necessary for the purpose of protection of the vessel or saving life.

2.1.14 No discharge condition

No discharge condition means the condition without discharge of hazardous wastes, treated and untreated wastewater, oily wastes or garbage into the water.

Note 1: In the scope of the "No discharge condition", no effluents from exhaust gas cleaning systems may be discharged into the water.

2.2 Definitions related to air pollution

2.2.1 Emission

Emission means any release of substances from vessels into the atmosphere or water.

2.2.2 Ozone-depleting substances

Ozone-depleting substances means controlled substances defined in paragraph (4) of article 1 of the Montreal Protocol on Substances that Deplete the Ozone Layer, 1987, listed in Annexes A, B, C or E to the said protocol in force at the time of application or interpretation of Annex VI of MARPOL 73/78.

Ozone-depleting substances that may be found on board vessel include, but are not limited to:

- Halon 1211 Bromochlorodifluoromethane
- Halon 1301 Bromotrifluoromethane
- Halon 2402 1,2-Dibromo-1,1,2,2-tetrafluoroethane (also known as Halon 114B2)
- CFC-11 Trichlorofluoromethane
- CFC-12 Dichlorodifluoromethane
- CFC-113 Trichloro-1,2,2-trifluoroethane
- CFC-114 1,2-Dichloro-1,1,2,2-tetrafluoroethane
- CFC-115 Chloropentafluoroethane.

2.2.3 NOx technical code

NOx Technical Code means the Revised Technical Code on Control of Emission of Nitrogen Oxides from Marine Diesel Engines adopted at MEPC 58 on 10 October 2008 with Resolution MEPC.177(58).

2.2.4 Emission control area

Emission control area means an area where the adoption of special mandatory measures for emissions from ships is required to prevent, reduce and control air pollution from NOx or SOx and particulate matter or all three types of emissions and their attendant adverse impacts on human health and the environment. Emission control areas include those listed in, or designated under, regulations 13 and 14 of Annex VI of MARPOL 73/78.

2.2.5 Onboard incineration

Onboard incineration means the incineration of wastes or other matter on board a vessel, if such wastes or other matter were generated during normal operation of that vessel.

2.2.6 Onboard incinerator

Onboard incinerator means an onboard facility designed for the primary purpose of incineration.

2.3 Abbreviations

2.3.1 AWT

AWT means advanced wastewater treatment.

2.3.2 ECA

ECA means emission control area

2.3.3 EGC

EGC means exhaust gas cleaning.

2.3.4 OWS

OWS means oily water separator.

3 Documents to be submitted and applicable standards

3.1 Documents to be submitted

3.1.1 Certificates

The certificates to be submitted prior to the assignment of the additional class notation **Cleanvessel** and other notations are listed in NR467, Pt F, Ch 9, Sec 1, Tab 2.

3.1.2 Operational procedures

The operational procedures to be submitted are listed in NR467, Pt F, Ch 9, Sec 1, Tab 3.

3.1.3 Plans and documents

The plans and documents to be submitted are listed in NR467, Pt F, Ch 9, Sec 1, Tab 4.

3.2 Modifications and additions

3.2.1 In case of modifications or additions to the approved installations, arrangements or procedures, the relevant details are to be submitted for review.

4 Onboard surveys

4.1 Application

4.1.1 Survey requirements for the additional class notations **Cleanvessel**, and other additional class notations listed in Tab 1 are given in Pt A, Ch 3, Sec 9.

This Article contains additional requirements applying to the additional class notations **Cleanvessel**.

4.2 Periodical tests and measurements done by the vessel Owner

4.2.1 Purpose

The following tests and measurements, done under the responsibility of the vessel Owner, are intended to demonstrate the effective implementation of the waste management procedures and the constant level over time kept by the quality of the effluents discharged at water.

4.2.2 Initial period - Initial tests

During the first year of commercial operation, the vessel Owner is to proceed with the following measurements and analyses:

- collection of actual on board data's concerning the volume of wastes generation, using the waste streams as defined in NR467, Pt F, Ch 9, Sec 2, Tab 1.
- analyses of the effluent and waste streams for pollutant concentration, according to the periodicity defined in Tab 2.

Table 2 : Frequency of analyses of waste streams during the first year of service

Waste stream	Frequency of analyses
Metals analyses in incinerator ash **(1)**	quarterly
Metals analyses in grey water	quarterly
Effluent analyses sewage treatment plan	yearly
Effluent analyses for Advanced Wastewater Treatment	quarterly
(1) If the vessel is equipped to dump incinerator ash overboard.	

Table 3 : Frequency of analyses of waste streams after the first year of service

Waste stream	Number of analyses in a 5-year period
Metals analyses in incinerator ash **(1)**	2
Metals analyses in grey water	2
Effluent analyses sewage treatment plan	2
Effluent analyses for Advanced Wastewater Treatment	20
Oil content analyses of machinery bilge water	2
(1) If the vessel is equipped to dump incinerator ash overboard.	

4.2.3 Periodical tests after first year of service

The effluents and wastes usually discharged to water are to be periodically sampled and analyzed by a qualified laboratory. The frequency of these tests in a five-year term period is specified in Tab 3.

Table 4 : Permissible number of analyses exceeding limit values

Number of analyses in a 5-year period	Maximum number of analyses above limit
2-5	0
20	2

Table 5 : Biological analyses standard for waters

Water to be tested	Pollutant	Limit concentration	Reject value
Effluent of oil filtering equipment	Oil	15 ppm	–
Effluent of sewage treatment plant	Thermotolerant coliforms (TC)	100 TC/100 ml	–
	Total suspended solids (TSS)	35 mg/l	–
	5-day biochemical oxygen demand (BOD_5) **(1)**	25 mg/l	–
	Chemical oxygen demand (COD)	125 mg/l	–
Effluent of AWT unit (for ships having the additional class notation **AWT**	5-day biochemical oxygen demand (BOD_5) **(1)**	25 mg/l	60 mg/l
	Chemical oxygen demand (COD)	125 mg/l	–
	Total nitrogen	20 mg/l	–
	Total phosphorus	1.0 mg/l	–

(1) BOD_5 is the amount, in milligrams per litre, of oxygen used in the biochemical oxidation of organic matter in five days at 20°C.

Tab 4 lists the number of occurrences where the pollutant maximum concentration may exceed the limit concentration specified in Tab 5 and Tab 6, without exceeding the reject value.

Test results of the measurements are to be recorded in the wastewater and garbage logbooks and made available to the surveyor during the periodical surveys.

4.2.4 Water effluent standard

The effluent standard for biological analyses of waters are given in Tab 5.

4.2.5 Metals analyses

The analyses given in Tab 6 are to qualify the incinerator ash and grey water as free from hazardous wastes. The metals listed in Tab 6 are considered as indicators of toxicity.

4.3 Periodical surveys

4.3.1 Initial survey Tests

After installation on board, the equipment and systems relevant to the requirements of the present Section are to be tested in the presence of the Surveyor under operating conditions. The control, monitoring and alarm systems are also to be tested in the presence of the Surveyor or their functioning is to be simulated according to a procedure agreed with the Society.

4.3.2 Periodical survey

The periodical surveys are to be carried out in accordance with the provisions of Pt A, Ch 3, Sec 9, [3].

Table 6 : Detection of heavy metalsin ashes and water

Metal	Limit concentration (ppm)
Arsenic	0,3
Barium	4,0
Cadmium	0,3
Chromium	5,0
Lead	1,5
Mercury	0,01
Selenium	0,3
Silver	0,2

SECTION 12 ESTUARY PLUS

Symbols

h_2 : Reference value, in m, of the relative motion in the inclined vessel condition in Pt B, Ch 3, Sec 3, [2.2.1]

γ_{W1} : Partial safety factor covering uncertainties regarding wave hull girder loads

$\gamma_{W1} = 1,15$

M_H : Design still water bending moment in hogging condition, in kN.m, defined in Pt B, Ch 3, Sec 2, [1]

M_S : Design still water vertical bending moment in sagging condition, in kN.m, defined in Pt B, Ch 3, Sec 2, [1]

M_{WV} : Vertical wave bending moment, in kN.m, defined in Pt B, Ch 3, Sec 2, [3.2]

M_{WH} : Horizontal wave bending moment, in kN.m, to be determined according to Pt B, Ch 3, Sec 2, [3.3]

I_Y : Net moment of inertia, in cm^4, of the hull transverse section defined in Pt B, Ch 4, Sec 1, [2.1] around the horizontal neutral axis

I_z : Net moment of inertia, in cm^4, of the hull transverse section defined in Pt B, Ch 4, Sec 1, [2.1] around the vertical neutral axis

N : Z co-ordinate, in m, of the centre of gravity of the hull transverse section

y : Y co-ordinate, in m, of the calculation point

z : Z co-ordinate, in m, of the calculation point

1 General

1.1 Application

1.1.1 Vessels complying with the requirements of this Section are eligible for the assignment of the navigation notation **Estuary plus**, as defined in Pt A, Ch 1, Sec 3, [12.3].

1.1.2 Vessels dealt with in this Section are to comply with the requirements stipulated in Part A, Part B and Part C of the Rules, as applicable, and with the requirements of this Section, which are specific to **Estuary plus** vessels.

1.1.3 Sea-keeping characteristics will be specially considered by the Society in the case of vessels of unusual design e.g.:

- vessel without any bilge keel
- vessel with an unusual hull shape.

2 Vessel design

2.1 Bilge keel

2.1.1 If fitted, the bilge keel is to comply with the requirements as defined in [2.1.2], [2.1.3], [2.1.4] and [2.1.5].

2.1.2 Arrangement

Bilge keels may not be welded directly on the shell plating. An intermediate flat, or doubler, is required on the shell plating.

The ends of the bilge keel are to be sniped at an angle of 15° or rounded with large radius. They are to be located in way of a transverse bilge stiffener. The ends of the intermediate flat are to be sniped at an angle of 15°.

2.1.3 Materials

The bilge keel and the intermediate flat are to be made of steel with the same yield stress and grade as that of the bilge strake.

2.1.4 Scantlings

The net thickness of the intermediate flat is to be equal to that of the bilge strake. However, this thickness may generally not be greater than 15 mm.

2.1.5 Welding

Welding of bilge keel and intermediate plate connections is to be in accordance with Pt B, Ch 8, Sec 2, [3.2].

2.2 Fore part

2.2.1 The minimum draught at the most forward point of the keel, T_{min}, is not to be less than:

$T_{min} = 1,1\ h_2$

2.2.2 Vessels not complying with [2.2.1] will be specially considered by the Society.

2.3 Hull integrity

2.3.1 The safety clearance of the lowest non-weathertight opening is to be greater than $1,5\ h_2$.

2.3.2 The freeboard, in m, is not to be less than:

$F_B = 1,5 h_2 - 0,95$

2.3.3 The bow height defined as the vertical distance at the forward perpendicular between the waterline and the top of the exposed deck shall not be less than 1,5 h_2. The bow height may be obtained through:

- a sheer extending for at least 0,15L measured from the forward perpendicular, or
- a raised forecastle deck extending from the stem to a point at least 0,07L abaft the forward perpendicular.

2.3.4 A forecastle bulwark complying with [2.4] extending from the stem to a point at least 0,07L abaft the forward perpendicular may be taken into account in the assessment according to [2.3.3], at the Society's discretion.

2.3.5 The angle of roll θ_R is to be limited as follows:

$\theta_R \leq 2\theta_f/3$

θ_R : Angle of roll, in degree, defined in [5.2.1]

θ_f : Angle of heel, in degree, defined in [5.2.1]

In all cases, the angle of roll θ_R shall not exceed 15°.

2.4 Bulwarks and guard rails

2.4.1 General requirements of Pt B, Ch 7, Sec 2 are to be complied with.

2.4.2 The height of the bulwarks or guard rails is to be at least 1 m from the deck. However, where their height would interfere with the normal operation of the vessel, a lesser height may be accepted, if adequate protection is provided and subject to any applicable statutory requirement.

2.4.3 Where bulwarks on the weather deck form a well, provisions are to be made for rapidly freeing the deck from water. The minimum required freeing port areas in bulwarks on the freeboard deck, on each side, are to be obtained as follows:

$A_{fp} = 0,029 n l_B h_B$

A_{fp} : Area of freeing ports, in m²

l_B : Length, in m, of bulwark in a well at one side of the vessel

h_B : Mean height, in m, of bulwark in a well of length l_B.

n : Navigation coefficient defined in Pt B, Ch 3, Sec 1, [5.2]

The lower edges of the freeing ports shall be as near the deck as practicable. All the openings in the bulwark are to be protected by rails or bars spaced approximately 230 mm apart.

Where a sheer is provided, two thirds of the freeing port area required shall be provided in the half of the well nearest the lowest point of the sheer curve. Where the exposed freeboard deck or an exposed forecastle deck has little or no sheer, the freeing port area is to be spread along the length of the well.

3 Design loads

3.1 General

3.1.1 General requirements of Part B, Chapter 3 are to be complied with.

3.1.2 Wind pressure

Wind pressure, in N/m², is to be obtained by use of the wind force as provided by the relevant administration or the harbour master.

The Society reserves the rights to impose a reasonable wind force if necessary.

4 Hull scantlings

4.1 General

4.1.1 The scantling is to be carried out according to relevant Sections in Part B, Chapter 5 and Part B, Chapter 6 using the load model defined in Pt B, Ch 2, Sec 5, [3].

4.1.2 Depending on the hull structural configuration and loading conditions, the Society may require stresses resulting from torsion analysis to be taken into account.

4.2 Load model

4.2.1 General

The wave lateral pressures and hull girder loads are to be calculated in mutually exclusive load cases "a", "b", "c" and "d" defined in Pt B, Ch 3, Sec 1, [4].

4.2.2 Hull girder normal stresses

The hull girder normal stresses to be considered for the strength check of plating, ordinary stiffeners and primary supporting members are obtained, in N/mm², from the following formulae:

- in general

  $\sigma_{X1} = \sigma_{S1} + \gamma_{W1}(C_{FV}\sigma_{WV1} + C_{FH}\sigma_{WH})$
- for structural members not contributing to the hull girder longitudinal strength:

  $\sigma_{X1} = 0$
- In flooding conditions:

  $\sigma_{X1} = 0$

where:

σ_{S1}, σ_{WV}, σ_{WH} : Hull girder normal stresses, in N/mm², defined in:

- Tab 2, for plating subjected to lateral loads
- Tab 3, for plating in-plane hull girder compression normal stresses
- Tab 4, for ordinary stiffeners and primary supporting members subjected to lateral pressure
- Tab 5, for ordinary stiffeners and primary supporting members subjected to wheeled loads

C_{FV}, C_{FH} : Combination factors defined in Tab 1

Table 1 : Combination factors C_{FV} and C_{FH}

Load case	C_{FV}	C_{FH}
"a"	0	0
"b"	1,0	0
"c"	0,4	1,0
"d"	0,4	1,0

Table 2 : Hull girder normal stresses - Plating subjected to lateral loads

Condition	σ_{S1}, in N/mm² **(1)**	σ_{WV1}, in N/mm²	σ_{WH}, in N/mm²
$\frac{\lvert M_S + 0,625\gamma_{W1}C_{FV}M_{WV}\rvert}{M_H + 0,625\gamma_{W1}C_{FV}M_{WV}} \geq 1$	$\left\lvert\frac{M_S}{I_Y}(z-N)\right\rvert 10^{-3}$	$\left\lvert\frac{0,625M_{WV}}{I_Y}(z-N)\right\rvert 10^{-3}$	$\left\lvert\frac{0,625M_{WH}}{I_Z}y\right\rvert 10^{-3}$
$\frac{\lvert M_S + 0,625\gamma_{W1}C_{FV}M_{WV}\rvert}{M_H + 0,625\gamma_{W1}C_{FV}M_{WV}} < 1$	$\left\lvert\frac{M_H}{I_Y}(z-N)\right\rvert 10^{-3}$	$\left\lvert\frac{0,625M_{WV}}{I_Y}(z-N)\right\rvert 10^{-3}$	
(1) When the vessel in still water is always in hogging condition, M_S is to be taken equal to 0.			

Table 3 : In-plane hull girder compression normal stresses - Plating

Condition	σ_{S1}, in N/mm² **(1)**	σ_{WV1}, in N/mm²	σ_{WH}, in N/mm²
$z \geq N$	$\left\lvert\frac{M_S}{I_Y}(z-N)\right\rvert 10^{-3}$	$\left\lvert\frac{0,625M_{WV}}{I_Y}(z-N)\right\rvert 10^{-3}$	$\left\lvert\frac{0,625M_{WH}}{I_Z}y\right\rvert 10^{-3}$
$z < N$	$\left\lvert\frac{M_H}{I_Y}(z-N)\right\rvert 10^{-3}$	$\left\lvert\frac{0,625M_{WV}}{I_Y}(z-N)\right\rvert 10^{-3}$	
(1) When the vessel in still water is always in hogging condition, M_S is to be taken equal to 0.			

Table 4 : Hull girder normal stresses - Ordinary stiffeners and primary supporting members subjected to lateral pressure

Condition	σ_{S1}, in N/mm² **(1)**	σ_{WV1}, in N/mm²	σ_{WH}, in N/mm²
Lateral pressure applied on the side opposite to the ordinary stiffener, with respect to the plating:			$\left\lvert\frac{0,625M_{WH}}{I_Z}y\right\rvert 10^{-3}$
• $z \geq N$ in general ; $z < N$ for stiffeners simply supported at both ends	$\left\lvert\frac{M_S}{I_Y}(z-N)\right\rvert 10^{-3}$	$\left\lvert\frac{0,625M_{WV}}{I_Y}(z-N)\right\rvert 10^{-3}$	
• $z < N$ in general ; $z \geq N$ for stiffeners simply supported at both ends	$\left\lvert\frac{M_H}{I_Y}(z-N)\right\rvert 10^{-3}$	$\left\lvert\frac{0,625M_{WV}}{I_Y}(z-N)\right\rvert 10^{-3}$	
Lateral pressure applied on the same side as the ordinary stiffener:			
• $z \geq N$ in general ; $z < N$ for stiffeners simply supported at both ends	$\left\lvert\frac{M_H}{I_Y}(z-N)\right\rvert 10^{-3}$	$\left\lvert\frac{0,625M_{WV}}{I_Y}(z-N)\right\rvert 10^{-3}$	
• $z < N$ in general ; $z \geq N$ for stiffeners simply supported at both ends	$\left\lvert\frac{M_S}{I_Y}(z-N)\right\rvert 10^{-3}$	$\left\lvert\frac{0,625M_{WV}}{I_Y}(z-N)\right\rvert 10^{-3}$	
(1) When the vessel in still water is always in hogging condition, M_S is to be taken equal to 0.			

Table 5 : Hull girder normal stresses - Ordinary stiffeners and primary supporting members subjected to wheeled loads

Condition	σ_{S1}, in N/mm² **(1)**	σ_{WV1}, in N/mm²	σ_{WH}, in N/mm²
Hogging	$\left\lvert\frac{M_H}{I_Y}(z-N)\right\rvert 10^{-3}$	$\left\lvert\frac{0,625M_{WV}}{I_Y}(z-N)\right\rvert 10^{-3}$	$\left\lvert\frac{0,625M_{WH}}{I_Z}y\right\rvert 10^{-3}$
Sagging	$\left\lvert\frac{M_S}{I_Y}(z-N)\right\rvert 10^{-3}$	$\left\lvert\frac{0,625M_{WV}}{I_Y}(z-N)\right\rvert 10^{-3}$	
(1) When the vessel in still water is always in hogging condition, M_S is to be taken equal to 0.			

5 Intact stability

5.1 Design criteria

5.1.1 GZ curve area

The area under the righting lever curve (GZ curve) shall not be less than 0,055 m.rad up to θ = 30° angle of heel and not less than 0,09 m.rad up to θ = 40° or the angle of down-flooding θ_f. Additionally, the area under the righting lever curve (GZ curve) between the angles of heel of 30° and 40° or between 30° and θ_f, if θ_f is less than 40°, shall not be less than 0,03 m.rad.

In case that the angle of down-flooding θ_f is less than 30°, the area under the righting lever curve (GZ curve) shall not be less than 0,09 m.rad up to θ_f.

5.1.2 Minimum righting lever

The righting lever GZ shall be at least 0,2 m at an angle of heel equal to or greater than min(30°, θ_f).

5.1.3 Angle of maximum righting lever

The maximum righting lever shall occur at an angle of heel not less than min(25°, θ_f).

5.1.4 Angle of down-flooding

The angle of down-flooding θ_f shall be not less than 17°.

5.1.5 Initial metacentric height

The initial metacentric height GM_0 is not to be less than 0,15 m.

5.2 Severe wind and rolling criterion (weather criterion)

5.2.1 The ability of a vessel to withstand the combined effects of beam wind and rolling shall be demonstrated, with reference to Fig 1 as follows:

a) The vessel is subjected to a steady wind pressure acting perpendicular to the vessel's centerline which results in a steady wind heeling lever (ℓ_{w1});

b) From the resultant angle of equilibrium (θ_0), the vessel is assumed to roll owing to wave action to an angle of roll (θ_1) to windward. The angle of heel under action of steady wind (θ_0) should not exceed 16° or 80% of the angle of deck edge immersion, whichever is less;

c) The vessel is then subjected to a gust wind pressure which results in a gust wind heeling lever (ℓ_{w2}); and

d) Under these circumstances, area "b" shall be equal to or greater than area "a" as indicated in Fig 1

where the angles are defined as follows:

θ_0 : Angle of heel, in degree, under action of steady wind

θ_1 : Angle of roll, in degree, to windward due to wave action

$$\theta_1 = \theta_R + \theta_0$$

θ_R : Angle of roll, in degree

$$\theta_R = 1,5\frac{180}{\pi}A_R$$

A_R : Roll amplitude, in radian, defined in Pt B, Ch 3, Sec 3, [2.1.4]

θ_2 : Angle of down-flooding (θ_f) or 50° or θ_c, whichever is less

θ_f : Angle of heel, in degree, at which the first unprotected opening is immersed

θ_c : Angle of second intercept between wind heeling lever ℓ_{w2} and GZ curves.

Figure 1 : Severe wind and rolling

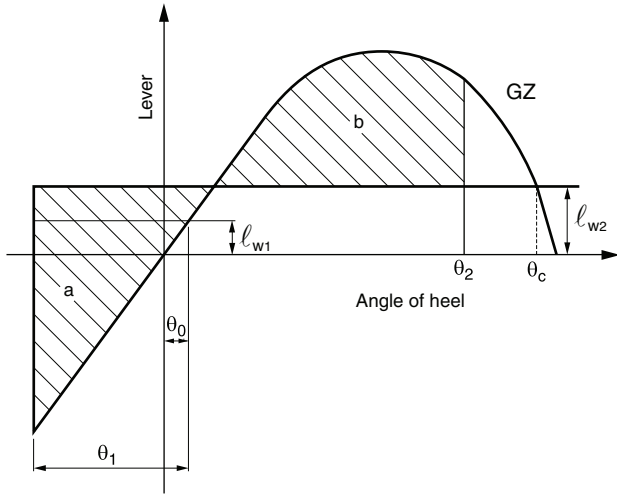

5.2.2 The wind heeling levers ℓ_{w1} and ℓ_{w2} referred to in [5.2.1] a) and [5.2.1] c) are constant values at all angles of inclination and shall be calculated as follows:

$$\ell_{W1} = \frac{PAZ}{1000g\Delta}$$

$$\ell_{W2} = 2\ell_{W1}$$

where

P : Wind pressure, in N/m², as defined in [3.1.2]

A : Projected lateral area in m², of the portion of the vessel and deck cargo above the waterline.

Z : Vertical distance in m, from the center of A to the center of the underwater lateral area or approximately to a point at one half the mean draught

Δ : Displacement in t

g : Gravitational acceleration of 9.81 m/s²

6 Machinery and systems

6.1 Propulsion

6.1.1 The vessel shall be equipped with two independent propulsion systems. The main propulsion system shall enable the vessel to reach a speed of at least 15 km/h. The auxiliary propulsion system shall enable the vessel to reach a speed of 7 km/h.

6.2 Main propulsion shafting

6.2.1 Shaft - Scantling

Scantlings of main propulsion shafting is to comply with applicable provisions of Pt C, Ch 1, Sec 7, [2.2] using the factor for type of propulsion installation as indicated below:

- F = 95 for intermediate and thrust shafts in turbine installations, diesel installations with hydraulic (slip type) couplings and electric propulsion installations
- F = 100 for all other diesel installation and all propeller shafts

6.3 Bilge system

6.3.1 A fixed bilge system with two independent pumps shall be provided. The capacity of each pump shall be as specified in Pt C, Ch 1, Sec 10, [6.7.4]. For each open cargo hold, a supplementary bilge pump shall be provided whose capacity shall be equal to the one of the two above-mentioned pumps. Each open cargo hold shall be fitted with a bilge level alarm.

7 Electrical installations

7.1 Power source

7.1.1 The power supply system shall comprise two generator sets. Each generator set shall be capable of supplying all essential consumers in case that the other generator set is defect. The two generator sets shall not be located in the same room.

8 Surveys

8.1 Survey requirements

8.1.1 In addition to applicable provisions of Pt A, Ch 3, Sec 3 to Pt A, Ch 3, Sec 9, vessels assigned with the notation **Estuary plus** shall be submitted to annual survey and intermediate survey complying with the requirements prescribed in Ch 2, Sec 9. The additional class notation **Annual survey** will be assigned in accordance with Pt A, Ch 1, Sec 3, [11.1].

Part D
Additional Requirements for Notations

Chapter 3
TRANSPORT OF DANGEROUS GOODS

SECTION 1 GENERAL

1 General

1.1 Application

1.1.1 The requirements of this Chapter apply to vessels intended for the carriage of dangerous goods.

1.1.2 Vessels dealt with in this Chapter are to comply with the requirements stated under Part A, Part B and Part C, as applicable.

1.1.3 Additional measures and Regulations containing the provisions dealing with:

- loading, carriage, unloading and handling of cargo
- vessel crews, equipment, operation and documentation
- vessel construction,

are also to be complied with.

1.1.4 Alternative arrangements and/or constructions, e.g. :

- arrangement for double hull construction
- design of electrical installations,

will be specially considered by the Society on a case-by-case basis, taking into account the level of encountered risks in handling and transporting dangerous substances intended to be carried together with anticipated counter-measures.

1.1.5 General or specific definitions used for the purposes of these Rules are given in Ch 3, App 1.

2 Classification

2.1 Classification of dangerous goods

2.1.1 In UN Model Regulations defined in Ch 3, App 1, [1.39], dangerous goods are assigned to different classes. Each class defines one type of dangerous goods. In some classes divisions are defined. The numerical order of the classes and divisions is not that of the degree of danger.

The classes defined in UN Model Regulations are given in Tab 1.

3 Carriage of dry cargoes

3.1 Mode of carriage of goods

3.1.1 Carriage of packages

Unless otherwise specified, the masses given for packages shall be the gross masses. When packages are carried in containers or vehicles, the mass of the container or vehicle shall not be included in the gross mass of such packages.

3.1.2 Carriage in containers, in intermediate bulk containers (IBCs) and in large packagings, in MEGCs, in portable tanks and in tank-containers

The carriage of containers, IBCs, large packagings, MEGCs, portable tanks and tank containers shall be in accordance with the provisions of the statutory Regulations or a recognized standard applicable to the carriage of packages.

Table 1 : Classification of dangerous goods

Class	Description
Class 1	Explosives
1.1	Substances and articles which have a mass explosion hazard
1.2	Substances and articles which have a projection hazard but not a mass explosion hazard
1.3	Substances and articles which have a fire hazard and either a minor blast hazard or a minor projection hazard or both, but not a mass explosion hazard
1.4	Substances and articles which present no significant hazard
1.5	Very intensive substances which have a mass explosion hazard
1.6	Extremely intensive articles which do not have a mass explosion hazard
Class 2	Gases
2.1	Flammable gases
2.2	Non-flammable, non-toxic gases
2.3	Toxic gases
Class 3	Flammable liquids
Class 4	Flammable solids; substances liable to spontaneous combustion; substances which, in contact with water, emit flammable gases
4.1	Flammable solids, self-reactive substances and solid desensitized explosives
4.2	Substances liable to spontaneous combustion
4.3	Substances which in contact with water emit flammable gases
Class 5	Oxidizing substances and organic peroxides
5.1	Oxidizing substances
5.2	Organic peroxides
Class 6	Toxic and infectious substances
6.1	Toxic substances
6.2	Infectious substances
Class 7	Radioactive material
Class 8	Corrosive substances
Class 9	Miscellaneous dangerous substances and articles

3.1.3 Vehicles and wagons

The carriage of vehicles and wagons shall be in accordance with the provisions of the statutory Regulations or a recognized standard applicable to the carriage of packages.

3.1.4 Carriage in bulk

The dangerous goods may be carried in bulk only if permitted by the applicable provisions of the statutory Regulations or a recognized standard.

3.2 Permitted vessels

3.2.1 Dangerous goods may be carried in quantities not exceeding those indicated in Ch 3, App 2, [1.1.1], or, if applicable, in Ch 3, App 2, [1.1.3], in dry cargo vessels complying with Ch 3, Sec 7, [1] to Ch 3, Sec 7, [5].

3.2.2 Dangerous goods of classes 2, 3, 4.1, 4.2, 4.3, 5.1, 5.2, 6.1, 7, 8 or 9 may be carried in quantities greater than those indicated in Ch 3, App 2, [1.1.1] and Ch 3, App 2, [1.1.3], in double hull dry cargo vessels complying with Ch 3, Sec 7.

3.3 Pushed convoys and side-by-side formations

3.3.1 Where a convoy or side-by-side formation comprises at least one vessel carrying dry dangerous goods, the requirements [3.3.2] to [3.3.3] apply.

3.3.2 The Vessels carrying dangerous goods shall comply with the requirements of Ch 3, Sec 7. See also [3.2.1] and [3.2.2].

3.3.3 The propulsion vessel and vessels not carrying dangerous goods shall comply with the requirements of Ch 3, Sec 9.

3.4 Materials of construction

3.4.1 The vessel's hull and the cargo holds must be constructed of hull structural steel conforming to the applicable requirements of NR216 Materials and Welding. See also Pt B, Ch 2, Sec 3.

4 Carriage of liquid cargoes

4.1 Carriage in cargo tanks

4.1.1 General

Substances, their assignment to the various types of tank vessels and the special conditions for their carriage in these tank vessels, are listed in Ch 3, App 3, Tab 2.

4.1.2 Substances which, according to column (6) of Ch 3, App 3, Tab 2, have to be carried in a tank vessel of N type open, may also be carried in a tank vessel of N type open with flame arresters, N type closed, C type or G type provided that all other conditions of carriage prescribed for tank vessels of N type open, as well as all other conditions of carriage required for these substances in Ch 3, App 3, Tab 2 are met.

4.1.3 Substances which, according to column (6) of Ch 3, App 3, Tab 2, have to be carried in a tank vessel of N type open with flame arresters, may also be carried in tank vessels of N type closed, C type or G type provided that all other conditions of carriage prescribed for tank vessels of N type open with flame arresters, as well as all other conditions of carriage required for these substances in Ch 3, App 3, Tab 2 are met.

4.1.4 Substances which, according to column (6) of Ch 3, App 3, Tab 2, have to be carried in a tank vessel of N type closed, may also be carried in tank vessels of C type or G type provided that all other conditions of carriage prescribed for tank vessels of N type closed, as well as all other conditions of carriage required for these substances in Ch 3, App 3, Tab 2 are met.

4.1.5 Substances which, according to column (6) of Ch 3, App 3, Tab 2, have to be carried in a tank vessel of C type may also be carried in tank vessels of G type provided that all other conditions of carriage prescribed for tank vessels of C type as well as all other conditions of carriage required for these substances in Ch 3, App 3, Tab 2 are met.

4.1.6 Oily and greasy wastes resulting from the operation of the vessel may only be carried in fire resistant receptacles, fitted with a lid, or in cargo tanks.

4.1.7 A substance which, according to column (8) of Ch 3, App 3, Tab 2, must be carried in cargo tank type 2 (integral cargo tank), may also be carried in a cargo tank type 1 (independent cargo tank) or cargo tank type 3 (cargo tank with walls distinct from the outer hull) of the vessel type prescribed in Ch 3, App 3, Tab 2 or a vessel type prescribed in [4.1.2] to [4.1.5], provided that all other conditions of carriage required for this substance by Ch 3, App 3, Tab 2 are met.

4.1.8 A substance which, according to column (8) of Ch 3, App 3, Tab 2, must be carried in cargo tank type 3 (cargo tank with walls distinct from the outer hull), may also be carried in a cargo tank type 1 (independent cargo tank) of the vessel type prescribed in Ch 3, App 3, Tab 2 or a vessel type prescribed in [4.1.2] to [4.1.5] or in a C type vessel with cargo tank type 2 (integral cargo tank), provided that at least the conditions of carriage concerning the prescribed N type are met and all other conditions of carriage required for this substance by Ch 3, App 3, Tab 2 or [4.1.2] to [4.1.5] are met.

4.2 Carriage of dangerous substances not listed in Ch 3, App 3, Tab 2

4.2.1 The requirements of this Chapter are also applicable to substances, which may be considered to come within the scope of these Rules, but are not at present listed in Ch 3, App 3, Tab 2.

Depending on the tank vessel design, construction and equipment, the Society may authorize the carriage of these substances, if their handling and transport conditions are found satisfactory.

4.3 Permitted vessels

4.3.1 Dangerous goods may be carried in tank vessels of N type, C type or G type in accordance with the applicable requirements of Ch 3, Sec 2 to Ch 3, Sec 6. The type of tank vessel to be used is specified in Ch 3, App 3, Tab 2 and in [4.1].

4.3.2 The substances accepted for carriage in the vessel will be indicated in a list issued by the Society.

The compatibility of the accepted dangerous goods with all the construction materials of the vessel, including installations and equipment, which come into contact with the cargo, is outside of the classification scope and remains the responsibility of the vessel Owner.

4.3.3 The relief pressure of the safety valves or of the high-velocity vent valves, the design pressure and the test pressure of cargo tanks will be indicated.

4.4 Pushed convoys and side-by-side formations

4.4.1 Where a convoy or side-by-side formation comprises at least one vessel carrying liquid dangerous goods, the requirements [4.4.2] to [4.4.4] apply.

4.4.2 The Vessels carrying dangerous goods shall comply with the requirements of [4.3].

4.4.3 The propulsion vessel shall comply with the requirements of Ch 3, Sec 8.

4.4.4 The vessels not carrying dangerous goods shall comply with the requirements of Ch 3, Sec 9.

4.5 Types of tank vessels

4.5.1 Tank vessel varieties

The tank vessel type, cargo tank design and cargo tank type are to be determined in compliance with Ch 3, App 3, Tab 2.

The basic tank types and their structural configuration are defined in Tab 2, where Txy is defined as follows:

T : Type of tank vessel, equal to (see Ch 3, App 3, Tab 2, column (6)):
- G for DG-G tank vessel
- C for DG-C tank vessel
- N for DG-N tank vessel

x : Cargo tank design, equal to (see Ch 3, App 3, Tab 2, column (7)):
- 1 for pressure tank
- 2 for closed cargo tank
- 3 for open cargo tank with flame arrester
- 4 for open cargo tank

y : Cargo tank type, equal to (see Ch 3, App 3, Tab 2, column (8)):
- 1 for independent cargo tank
- 2 for integral cargo tank
- 3 for cargo tank with walls distinct from the outer hull.
- 4 for membrane cargo tank.

4.6 Pressure cargo tanks

4.6.1 Scantling and arrangements of pressure cargo tanks are to be in compliance with Pt C, Ch 1, Sec 3.

Table 2 : Tank vessel varieties

Type of tank vessel	Description	Configuration Txy	Structural configuration	Remarks
DG-G	Carriage of gases	G11	Ch 1, Sec 3, Fig 3, Sketches b and c	double hull
		G21	Ch 1, Sec 3, Fig 3	
		G24	Ch 1, Sec 3, Fig 3 Ch 1, Sec 3, Fig 4	double hull
DG-C	Carriage of liquids • flush deck • double hull	C11	Ch 1, Sec 3, Fig 3, Sketch c	double hull
		C21	Ch 1, Sec 3, Fig 3, Sketches c and d	double hull
		C22	Ch 1, Sec 3, Fig 2, Sketch b	double hull
DG-N	Carriage of liquids	N11	Ch 1, Sec 3, Fig 3	
		N21		
		N31		
		N41		
		N22	Ch 1, Sec 3, Fig 1	single hull
		N23	Ch 1, Sec 3, Fig 2	double hull
		N32	Ch 1, Sec 3, Fig 1	single hull
		N33	Ch 1, Sec 3, Fig 2	double hull
		N42	Ch 1, Sec 3, Fig 1	single hull
		N43	Ch 1, Sec 3, Fig 2	double hull

4.7 Blanketing of the cargo and inerting

4.7.1 In cargo tanks and the corresponding piping, inerting in the gaseous phase or blanketing of the cargo may be necessary. Inerting and blanketing of the cargo are defined in [4.7.2] and [4.7.3].

4.7.2 Inerting

Cargo tanks and the corresponding piping and other spaces for which inerting is prescribed in column (20) of Ch 3, App 3, Tab 2 are filled with gases or vapours which prevent combustion, do not react with the cargo and maintain this state.

4.7.3 Blanketing

Spaces in the cargo tanks above the cargo and the corresponding piping are filled with a liquid, gas or vapour so that the cargo is separated from the air and this state is maintained.

4.8 Materials of construction

4.8.1 The vessel's hull and the cargo tanks must be constructed of hull structural steel conforming to the applicable requirements of NR216 Materials and Welding (see also Pt B, Ch 2, Sec 3) or other at least equivalent metal.

Table 3 : Permitted materials in the cargo area

	Wood	Aluminium alloys	Plastic materials	Rubber
Gangways	x	x	x	x
External ladders and passageways (gangways) **(1)**		x	x	x
Cleaning equipment, e.g. brooms	x		x	x
Movable equipment e.g. fire extinguishers, portable gas detectors, rescue winches		x	x	x
Fenders	x		x	x
Mooring cables, fender ropes			x	
Chocking of cargo tanks which are independent of the vessel's hull and chocking of installations and equipment	x		x	
Masts and similar round timber	x	x	x	
Engine parts		x	x	
Protective covers of engines and pumps			x	
Parts of the electrical installation		x	x	
Parts of the loading and unloading installation, e.g., gaskets		x	x	x
Boxes, cabinets or other receptacles placed on the deck for storage of disposal and recovery equipment for capstans, extinguishers, fire hoses, waste, etc.		x	x	
Supports and stops of any kind	x		x	
Ventilators, including hose assemblies for ventilation		x	x	
Parts of the water spray system, the shower and the eye and face bath		x	x	
Insulation of cargo tanks and of piping for loading and unloading, gas discharge pipes and heating pipes			x	x
Coating of cargo tanks and of piping for loading and unloading		x	x	x
All kinds of gaskets (e.g. for dome or hatch covers)			x	x
Cables for electrical equipment			x	x
Mat under hose assemblies for loading and unloading piping system			x	x
Fire hoses, air hoses, hoses for cleaning the deck, etc.			x	x
Sampling equipment and bottles			x	
Drip trays			x	

Note 1: Aluminium gauging rods are permitted, provided that they are fitted with brass feet or protected in another way to avoid sparking.

(1) The use of aluminium alloys or plastic material for passageways (gangways) in the cargo area is permitted only if the material does not readily ignite or conduct electricity.

4.8.2 The independent cargo tanks and membrane cargo tanks may also be constructed of other materials provided these have at least equivalent mechanical properties and resistance against the effects of temperature and fire.

For membrane tanks, the equivalence for resistance against the effect of temperature and fire is deemed to be proven where the materials of the membrane tanks fulfill the following requirements:

- they withstand the range between the maximum temperature in service and 5°C below the minimum design temperature, but not lower than - 196°C, and
- they are fire-resistant or protected by a suitable system such as a permanent inert gas environment or provided with a fire retardant barrier.

4.8.3 Every part of the vessel including any installation and equipment which may come into contact with the cargo shall consist of materials which can neither be dangerously affected by the cargo nor cause decomposition of the cargo or react with it so as to form harmful or hazardous products.

4.8.4 Venting pipes and gas discharge pipes shall be protected against corrosion.

4.8.5 The use of wood, aluminium alloys, plastic materials or rubber in the cargo area is permitted only for items indicated in Tab 3.

4.8.6 All permanently fitted materials in the accommodation or wheelhouse, with the exception of furniture, shall not readily ignite. They shall not evolve fumes or toxic gases in dangerous quantities, if involved in a fire.

4.8.7 The paint used in the cargo area shall not be liable to produce sparks in case of impact.

4.8.8 The use of plastic material for vessel's boats is permitted only if the material does not readily ignite.

5 Certification, inspection and testing of cargo system

5.1 Application

5.1.1 The provisions of this Article are related to cargo piping and other equipment fitted in the cargo area. They supplement those given in Pt C, Ch 1, Sec 10, [20] for piping systems.

5.2 Type approval

5.2.1 The following cargo system equipment and installations are subject to type approval:

- expansion joints and cargo hoses
- gas-tight penetration glands
- cargo tank P/V and high velocity valves: to be tested according to Standard ISO 16852 (2016) or equivalent standard
- gas detection system
- instrumentation
- fans for enclosed spaces
- insulation materials
- safety relief valves
- flame arresters: to be tested according to Standard ISO 16852 (2016) or equivalent standard.

Inspection and testing at works are to be carried out according to [5.3].

5.3 Workshop tests

5.3.1 Tests for materials

Materials used for pipes, valves and fittings are to be subjected to the tests specified in Pt C, Ch 1, Sec 10, [20.3].

5.3.2 Inspection of welded joints

Welded joints are to be subjected to the examinations specified in Pt C, Ch 1, Sec 10, [20.3] for class II pipes.

5.3.3 Hydrostatic testing

a) Cargo pipes, valves, fittings and pump casings are to be submitted to hydrostatic tests in accordance with the relevant provisions of Pt C, Ch 1, Sec 10, [20.4].

b) Expansion joints and cargo hoses are to be submitted to hydrostatic tests in accordance with the relevant provisions of Pt C, Ch 1, Sec 10, [20.4].

c) Where fitted, bellow pieces of gas-tight penetration glands are to be pressure tested.

5.3.4 Tightness tests

Tightness of the following devices is to be checked:

- gas-tight penetration glands
- cargo tank P/V and high velocity valves.

Note 1: These tests may be carried out in the workshops or on board.

5.3.5 Check of the safety valves setting

The setting pressure of the pressure/vacuum valves is to be checked with regard to applicable Society's Rules.

5.3.6 Summarising table

Inspections and tests required for cargo piping and other equipment fitted in the cargo area are summarised in Tab 4.

5.4 On board tests

5.4.1 Pressure test

After installation on board, the cargo piping system is to be checked for leakage under operational conditions.

Table 4 : Inspection and testing at works

No.	Item	Tests for materials		Inspections and tests for the products			References to this Section
		Y/N **(1)**	Type of material certificate **(2)**	during manufacturing **(1)**	after completion **(1) (3)**	Type of product certificate **(2)**	
1	Pipes, valves and fittings (liquid cargo)	Y	C where ND > 100 mm W where ND ≤ 100 mm	Y **(4)**	Y	C	[5.3.1] [5.3.1] [5.3.2] [5.3.3] **(7)**
2	Pipes, valves and fittings (liquefied gas)	Y	C where ND > 100 mm W where ND ≤ 100 mm	Y **(4)**	Y	C	[5.3.1] [5.3.1] [5.3.2] [5.3.3]
3	Expansion joints and cargo hoses	Y **(5)**	W	N	Y	C	[5.3.1] [5.3.3]
4	Cargo pumps (liquid cargo)	Y	C for cast body W for welded construction	Y **(6)**	Y	W	**(6)** [5.3.3]
5	Cargo pumps (liquefied gas)	Y	C for cast body W for welded construction	Y **(6)**	Y	C	**(6)** [5.3.3] **(7)**
6	Compressors	Y	C for cast body W for welded construction	Y **(6)**	Y	C	**(6)** [5.3.3]
7	Gas-tight penetration glands	N		N	Y	C	[5.3.3], [5.3.4] **(7)**
8	Cargo tank P/V and high velocity valves	Y	W	Y	Y	C	[5.3.1] [5.3.2] [5.3.3], [5.3.4] **(7)**
9	Flame arresters	N		N	Y	C	**(3)** **(7)**

No.	Item	Tests for materials		Inspections and tests for the products			References to this Section
		Y/N **(1)**	Type of material certificate **(2)**	during manufacturing **(1)**	after completion **(1) (3)**	Type of product certificate **(2)**	
10	Gas detection system	N		N	Y	C	**(7)**
11	Instrumentation	N		N	Y	C	**(7)**
12	Fans for enclosed spaces	N		N	Y	W	

(1) Y = required, N = not required.
(2) C = class inspection certificate, W = works' certificate.
(3) Includes the checking of the rule characteristics according to the approved drawings.
(4) Only in the case of welded construction.
(5) If metallic.
(6) Inspection during manufacturing is to be carried out according to a program approved by the Society.
(7) Or alternative type of certificate, depending on the survey scheme.

SECTION 2 DG-G

Symbols

L_{OA} : Length overall, in m, defined in: Pt B, Ch 1, Sec 2, [2.5]

B_2 : Breadth of the side tank, in m

D_2 : Height of the double bottom, in m.

1 General

1.1 Application

1.1.1 Vessels complying with the requirements of this Section are eligible for the assignment of the additional service feature **DG-G**, as defined in Pt A, Ch 1, Sec 3, [3.2.13].

1.1.2 These Rules apply in addition to Ch 3, Sec 1 and Ch 1, Sec 3.

1.2 Applicable rule requirements

1.2.1 For scantling of the hull of vessels with inserted tanks, see Ch 1, Sec 3, [6.1.1].

1.2.2 The design and construction of pressure tanks is to conform to Pt C, Ch 1, Sec 3.

1.3 Documents to be submitted

1.3.1 Tab 1 lists the plans and information to be submitted in addition to those required in the other Parts of the Rules for the vessel parts not affected by the cargo, as applicable.

1.4 Definitions

1.4.1 Design pressure

The design pressure p_0 is defined in Ch 3, App 1, [1.14].

For cargo tanks where there is no temperature control and where the pressure of the cargo is dictated only by the ambient temperature, p_0 is not to be less than the gauge vapour pressure of the cargo at a temperature of 40°C.

In all cases p_0 is not to be less than MARVS.

1.4.2 Design temperature

The design temperature for selection of materials is the minimum temperature at which cargo may be loaded or transported in the cargo tanks. Provisions to the satisfaction of the Society are to be made that the tank or cargo temperature cannot be lowered below the design temperature.

1.4.3 MARVS

MARVS is the maximum allowable relief valve setting of a cargo tank.

2 Vessel arrangement

2.1 Protection against the penetration of dangerous gases and the spreading of dangerous liquids

2.1.1 The vessel shall be designed so as to prevent dangerous gases and liquids from penetrating into the accommodation, wheelhouse and the service spaces. None of the windows in these spaces shall be capable of being opened unless its intended use is as an emergency exit and it is marked as such.

2.1.2 Liquid-tight protective coamings shall be fitted on deck at the height of the external bulkheads of the cargo tanks, at a maximum distance of 0,60 m from the outer cofferdam bulkheads or the hold end bulkheads. The protective coamings shall either extend over the entire width of the vessel or be fixed between the longitudinal spill coamings so as to prevent liquids from entering the forepeak and afterpeak. The height of the protective coamings and the spill coamings shall be at least 0,075 m. The protective coaming may correspond to the protection wall prescribed in [2.1.3] if the protection wall extends across the entire width of the vessel.

2.1.3 If the list of substances on the vessel according to Ch 3, Sec 1, [4.3.2] is going to include substances that require explosion protection in accordance with column (17) of Ch 3, App 3, Tab 2, then the use of installations and equipment that are not of at least the "limited explosion risk" type is not permitted during loading and unloading operations in parts of the deck outside the cargo area, unless those parts are protected against the entry of gases and liquids by a gas- and liquid-tight protection wall. The wall must either extend from one side of the vessel to the other or surround the areas to protect in an U-shaped form. The wall must cover the whole width of the area to protect and at least 1.00 m in the direction opposite to the cargo area (see Ch 3, App 1, Fig 1). The height of the wall shall be at least 1.00 m above the adjacent cargo deck area in the cargo area. The outer wall and side walls of the accommodation can be considered as a protection wall if they do not include openings and if the dimensions are complied with.

A protection wall is not required where the distance between the areas to be protected and the safety valve, the shore connections of the piping for loading and unloading, and venting piping, the compressor on deck and the opening of the closest pressure tanks is at least 12.00 m.

Table 1 : Plans and documents to be submitted

No.	A/I (1)	Documents
1	I	List of substances intended to be carried with their UN number (see Ch 3, App 3, Tab 2), including all design characteristics of substances and other important design conditions
2	I	General arrangement plan, showing location of cargo tanks and fuel oil, ballast and other tanks
3	A	Hazardous areas plan and location of the electrical equipment installed in these areas
4	A	Location of void spaces and accesses to dangerous zones
5	A	Air locks between safe and dangerous zones
6	A	Ventilation duct arrangement in gas-dangerous spaces and adjacent zones
7	A	Details of hull structure in way of cargo tanks, including support arrangement for tanks, saddles, anti-floating and anti-lifting devices, deck sealing arrangements, etc.
8	A	Calculation of the hull temperature in all the design cargo conditions
9	A	Intact and damage stability calculations
10	A	Scantlings, material and arrangement of the cargo containment system
11	A	Details of insulation
12	A	Details of ladders, fittings and towers in tanks and relative stress analysis, if any
13	A	Details of tank domes and deck sealings
14	A	Plans and calculations of safety relief valves
15	A	Details of cargo handling and vapour system, including arrangements and details of piping and fitting
16	A	Details of cargo pumps and cargo compressors
17	A	Details of process pressure vessels and relative valving arrangement
18	A	Bilge and ballast system in cargo area
19	A	Gas freeing system in cargo tanks including inert gas system
20	A	Ventilation system in cargo area
21	A	Refrigeration plant system diagram, if any
22	A	Water spray system diagram
23	A	List of the electrical equipment installed in hazardous areas comparable to zone 0 and 1, including the following equipment particulars: location, type of protection, type of protection against explosion, testing body and approval number
24	A	Schematic electrical wiring diagram in cargo area
25	A	Gas detection system
26	A	Cargo tank instrumentation, including cargo and hull temperature monitoring system
27	A	Emergency shutdown system
28	A	Details of fire-extinguishing appliances and systems in cargo area
29	A	Arrangement drawing of the various fire bulkheads and decks with standard fire test reports for the various arrangements, surface coverings, paints and similar
30	A	Loading and unloading operation description, including cargo tank filling limits
31	A	List of equipment installed in hazardous areas comparable to zone 2 which may be used during loading, unloading and gas-freeing and red equipment

(1) A = to be submitted for review
I = to be submitted for information.

2.1.4 On deck, the lower edges of door-openings in the sidewalls of superstructures and the sills of hatches and ventilation openings of premises located under the deck shall have a height of not less than 0,50 m above the deck.

This requirement does not apply to access openings to double-hull spaces and double bottoms.

2.1.5 The bulwarks, foot-rails, etc., shall be provided with sufficiently large openings which are located directly above the deck.

2.2 Engine rooms

2.2.1 Internal combustion engines for the vessel's propulsion as well as internal combustion engines for auxiliary machinery shall be located outside the cargo area. Entrances and other openings of engine rooms shall be at a distance of not less than 2,00 m from any hazardous area comparable to zone 0 or 1.

2.2.2 The engine room shall be accessible from the deck; the entrances shall not face the cargo area. When the doors are not located in a recess whose depth is at least equal to the door width, the hinges shall face the cargo area.

2.3 Accommodation and service spaces

2.3.1 Accommodation spaces and the wheelhouse shall be located outside the cargo area, see Ch 3, App 1, [1.7] for definition, forward of the fore vertical plane or abaft the aft vertical plane bounding the part of cargo area below deck. Windows of the wheelhouse which are located not less than 1,00 m above the bottom of the wheelhouse may tilt forward.

2.3.2 Entrances to spaces and openings of superstructures shall not face the cargo area. Doors opening outward and not located in a recess the depth of which is at least equal to the width of the doors shall have their hinges facing the cargo area.

2.3.3 Entrances from the deck and openings of spaces facing the weather shall be capable of being closed.

2.3.4 Entrances and windows of superstructures and accommodation spaces which can be opened as well as other openings of these spaces shall be located not less than 2,00 m from any hazardous area comparable to zone 0 or 1. No wheelhouse doors and windows shall be located within 2,00 m from any hazardous area comparable to zone 0 or 1, except where there is no direct connection between the wheelhouse and the accommodation.

2.3.5

a) Driving shafts of the bilge or ballast pumps may penetrate through the bulkhead between the service space and the engine room, provided the arrangement of the service space is in compliance with [2.4.6].

b) The penetration of the shaft through the bulkhead shall be gastight and shall have been approved by the Society.

c) Penetrations through the bulkhead between the engine room and the service space in the cargo area, and the bulkhead between the engine room and the hold spaces may be provided for electrical cables, hydraulic lines and piping for measuring, control and alarm systems, provided that the penetrations have been approved by the Society. The penetrations shall be gastight. Penetrations through a bulkhead with a "A-60" fire protection insulation (see Pt C, Ch 4, Sec 1, [2.2]), shall have an equivalent fire protection.

d) Pipes may pass through the bulkhead between the engine room and the service space in the cargo area provided that these are pipes between the mechanical equipment in the engine room and the service space which do not have any openings within the service space and which are provided with shut-off devices at the bulkhead in the engine room.

e) Notwithstanding [2.4.5], pipes from the engine room may pass through the service space in the cargo area or a cofferdam or a hold space or a double-hull space to the outside provided that within the service space or cofferdam or hold space or double hull space they are of the thick-walled type and have no flanges or openings.

f) Where a driving shaft of auxiliary machinery penetrates through a wall located above the deck the penetration shall be gastight.

2.3.6 A service space located within the cargo area below deck shall not be used as a cargo pump room for the vessel's own gas discharging system, e.g. compressors or the compressor/heat exchanger/pump combination, except where:

- the cargo pump room is separated from the engine room or from service spaces outside the cargo area by a cofferdam or a bulkhead with an "A-60" fire protection insulation (see Pt C, Ch 4, Sec 1, [2.2]), or by a service space or a hold space
- the "A-60" bulkhead required above does not include penetrations referred to in [2.3.5], item a)
- ventilation exhaust outlets are located not less than 6,00 m from entrances and openings of the accommodation and service spaces
- the access hatches and ventilation inlets can be closed from the outside
- All piping for loading and unloading (at the suction side and the delivery side) are led through the deck above the pump-room. The necessary operation of the control devices in the pump-room, starting of pumps or compressors and control of the liquid flow rate shall be effected from the deck
- the system is fully integrated in the gas and liquid piping system
- the cargo pump room is provided with a permanent gas detection system which automatically indicates the presence of explosive gases or lack of oxygen by means of direct-measuring sensors and which actuates a visual and audible alarm when the gas concentration has reached 20% of the lower explosive limit. The sensors of this system shall be placed at suitable positions at the bottom and directly below the deck.

  Measurement shall be continuous.

  The audible and visual alarms are installed in the wheelhouse and in the cargo pump room and, when the alarm is actuated, the loading and unloading system is shut down. Failure of the gas detection system shall be immediately signalled in the wheelhouse and on deck by means of audible and visual alarms.
- the ventilation system prescribed in [2.5] has a capacity of not less than 30 changes of air per hour based on the total volume of the service space.

2.4 Hold spaces

2.4.1 The hold spaces shall be separated from the accommodation, engine rooms and service spaces outside the cargo area below deck by bulkheads provided with a class A-60 fire protection insulation (see Pt C, Ch 4, Sec 1, [2.2]).

A space of not less than 0,20 m shall be provided between the cargo tanks and the end bulkheads of the hold spaces. Where the cargo tanks have plane end bulkheads this space shall be not less than 0,50 m.

2.4.2 The hold spaces and cargo tanks shall be capable of being inspected.

2.4.3 All spaces in the cargo area shall be capable of being ventilated. Means for checking their gas-free condition shall be provided.

2.4.4 Double hull spaces and double bottoms in the cargo area shall be arranged for being filled with ballast water only. Double bottoms may, however, be used as fuel oil tanks, provided they comply with [2.7].

2.4.5 The bulkheads bounding the hold spaces shall be watertight. The cargo tanks and the bulkheads bounding the cargo area shall have no openings or penetrations below deck. The bulkhead between the engine room and the service spaces within the cargo area or between the engine room and a hold space may be fitted with penetrations provided that they conform to the requirements of [2.3.5].

2.4.6

a) A space in the cargo area below deck may be arranged as a service space, provided that the bulkhead bounding the service space extends vertically to the bottom and the bulkhead not facing the cargo area extends from one side of the vessel to the other in one frame plane. This service space shall only be accessible from the deck.

b) The service space shall be watertight with the exception of its access hatches and ventilation inlets.

c) No piping for loading or unloading shall be fitted within the service space referred to in item a) above.

   Piping for loading and unloading may be fitted in the cargo pump-rooms below deck only when they conform to the provisions of [2.3.6].

2.4.7 Where service spaces are located in the cargo area under deck, they shall be arranged so as to be easily accessible and to permit persons wearing protective clothing and breathing apparatus to safely operate the service equipment contained therein. They shall be designed so as to allow injured or unconscious persons to be removed from such spaces without difficulty, if necessary by means of fixed equipment.

2.4.8 Hold spaces and other accessible spaces within the cargo area shall be arranged so as to ensure that they may be completely inspected and cleaned in an appropriate manner. The dimensions of openings, except for those of double hull spaces and double bottoms which do not have a wall adjoining the cargo tanks, shall be in compliance with Pt B, Ch 2, Sec 1, [3.2.2].

2.4.9 In case the vessel has insulated cargo tanks, the hold spaces shall only contain dry air to protect the insulation of the cargo tanks against moisture.

2.5 Ventilation

2.5.1 Each hold space shall have two openings the dimensions and location of which shall be such as to permit effective ventilation of any part of the hold space. If there are no such openings, it shall be possible to fill the hold spaces with inert gas or dry air.

2.5.2 Double-hull spaces and double bottoms within the cargo area which are not arranged for being filled with ballast water and cofferdams between engine rooms and pump-rooms, if they exist, shall be provided with ventilation systems.

2.5.3 A service space located within the cargo area below deck shall be provided with a ventilation system. The capacity of the fans shall be sufficient to ensure 20 complete changes of air per hour based on the volume of the service space.

The ventilation exhaust ducts shall extend down to 50 mm above the bottom of the service space. The air shall be supplied through a duct at the top of the service space.

If the list of substances on the vessel according to Ch 3, Sec 1, [4.3.2] is going to include substances that require explosion protection in accordance with column (17) of Ch 3, App 3, Tab 2, then the air inlets shall be located not less than 2.00 m above the deck, at a distance of not less than 2.00 m from tank openings and 6.00 m from the outlets of safety valves.

The extension pipes which may be necessary may be of the hinged type.

2.5.4 Ventilation of accommodation and service spaces shall be possible.

2.5.5 All ventilation inlets of accommodation, wheelhouse and service spaces leading to the open air outside the cargo area shall be fitted with devices permanently fixed according to Pt C, Ch 4, Sec 4, [4.2], enabling them to be closed rapidly. It shall be clear whether they are open or closed.

Such ventilation inlets shall be located not less than 2.00 m from the cargo area.

Ventilation inlets of service spaces in the cargo area may be located within that area.

2.6 Engines

2.6.1 Only internal combustion engines running on fuel having a flash point above 55°C are allowed. This provision does not apply to internal combustion engines which are part of propulsion and auxiliary systems fitted onboard vessels assigned one of the additional service features Dualfuel or Gasfuel according to Pt A, Ch 1, Sec 3, [1.3.5].

2.6.2 Ventilation inlets of the engine room and, when the engines do not take in air directly from the engine room, the air intakes of the engines shall be located not less than 2,00 m from any hazardous area comparable to zone 0 or 1.

2.7 Oil fuel tanks

2.7.1 When the vessel is fitted with hold spaces and double bottoms, double bottoms within the cargo area may be arranged as a liquid oil fuel tanks, provided their depth is not less than 0,60 m.

Oil fuel pipes and openings of such tanks are not permitted in the hold space.

2.7.2 The open ends of the air pipes of each oil fuel tanks shall extend to not less than 0,5 m above the open deck. These open ends and the open ends of overflow pipes leading to the deck shall be fitted with a protective device consisting of a gauze diaphragm or a perforated plate.

2.8 Exhaust pipes

2.8.1 Exhausts shall be evacuated from the vessel into the open air either upwards through an exhaust pipe or through the shell plating. The exhaust outlet shall be located not less than 2,00 m from any hazardous area comparable to zone 0 or 1. The exhaust pipes of engines shall be arranged so that the exhausts are led away from the vessel. The exhaust pipes shall not be located within any hazardous area comparable to zone 0 or 1.

2.8.2 Exhaust pipes shall be provided with a device preventing the escape of sparks, e.g. spark arresters.

2.9 Bilge pumping and ballasting arrangements

2.9.1 Bilge and ballast pumps for spaces within the cargo area shall be installed within such area.

This provision does not apply to:

- double-hull spaces and double bottoms which do not have a common boundary wall with the cargo tanks;
- cofferdams and hold spaces where ballasting is carried out using the piping of the fire fighting system in the cargo area and bilge-pumping is performed using eductors which are installed in the cargo area.

2.9.2 Where the double bottom is used as a liquid oil fuel tank, it shall not be connected to the bilge piping system.

2.9.3 Where the ballast pump is installed in the cargo area, the standpipe and its outboard connection for suction of ballast water shall be located within the cargo area.

2.9.4 It shall be possible for an under-deck pump room to be stripped in an emergency using a system located in the cargo area and independent of any other system. This stripping system shall be located outside the pump-room.

2.10 Ventilation of cargo pump rooms and gas compressor rooms

2.10.1 Cargo pump and compressor rooms must be provided with extraction type ventilation systems, independent of other vessel's spaces, providing at least 30 cycles of air change per hour. Warning notices shall be placed requiring that the ventilation is in operation for at least 15 minutes prior to entering these spaces.

2.10.2 Portable means must be provided for gas-freeing of cargo tanks and other spaces not equipped with fixed ventilation.

3 Cargo containment

3.1 Cargo area hull design

3.1.1 General

In the cargo area, the vessel shall be designed either as a double hull and double bottom vessel, or as a single hull vessel, according to [3.1.2] to [3.1.4].

Alternative constructions will be specially considered by the Society on a case-by-case basis.

3.1.2 Double hull vessel

Vessels with double hull and double bottom shall comply with the following:

- the internal distance between the side platings of the vessel and the longitudinal bulkheads shall not be less than 0,80 m
- the height of the double bottom shall not be less than 0,60 m
- the cargo tanks shall be supported by saddles extending between the tanks to not less than 20° below the horizontal centreline of the cargo tanks.

3.1.3 Single hull vessel

Single hull vessel shall comply with the following:

- it shall be fitted with side platings between gangboard and top of floor plates provided with side stringers at intervals of not more than 0,60 m which are supported by web frames spaced at intervals of not more than 2,00 m
- the side stringers and the web frames shall have a height of not less than 10% of the vessel depth, however, not less than 0,30 m
- the side stringers and web frames shall be fitted with a face plate made of a flat steel and having a cross section of not less than 7,5 cm^2 and 15 cm^2 respectively
- the distance between the side plating of the vessel and the cargo tanks shall be not less than 0,80 m and between the bottom and the cargo tanks not less than 0,60 m. the depth below the suction wells may be reduced to 0,50 m
- the lateral distance between the suction well of the cargo tanks and the bottom structure shall be not less than 0,10 m
- The cargo tank supports and fastenings should extend to not less than 10° below the horizontal centreline of the cargo tanks.

3.1.4 Side-struts linking or supporting the load-bearing components of the sides of the vessel with the load bearing components of the longitudinal walls of cargo tanks and side struts linking the load-bearing components of the vessel’s bottom with the tank bottom are prohibited.

3.2 Carriage of liquefied gases under pressure

3.2.1 Cargo tank design

a) Pressure vessels shall, in general, be designed as the domed type. Fittings must be mounted on the domes or elsewhere on the upper part of the tanks above the open deck in the cargo area. They shall be protected against damage and must be secured in such a way that undue stresses caused by vibration or expansion cannot occur. At least one manhole shall be arranged in the tank dome or as a separate dome with the access opening located on the open deck.

b) Pressure independent built-in cylindrical tanks shall have a length to diameter ratio ≤ 7.

c) The pressure tanks shall be designed for a cargo temperature of +40°C.

3.2.2 Insulation

The insulation of pressure vessels is to be made of approved material covered with a vapour barrier of low flame spread type.

3.2.3 Coating

Pressure vessels shall be painted externally for protection against corrosion. Uninsulated or unprotected portions on the open deck shall be coated with reflecting paints.

3.2.4 Maximum filling

With the cargo at the reference temperature specified in [1.4], pressure vessels may not be filled to more than 91% for un-cooled and 95% for cooled carriage.

3.2.5 Name plates

Each pressure vessel must bear a name plate showing the following data:

- name of manufacturer, serial number, year of manufacture
- cubic capacity, in m^3
- design pressure and test pressure, in bar
- certificate No., month and year of test
- stamp of certifying firm
- lowest operation temperature, in °C
- vapour pressure, in bar at reference temperature, in °C.

The name plates must be legible from the deck.

3.3 Carriage of refrigerated liquefied gases

3.3.1 Requirements as set out in the applicable statutory Regulations or a recognized standard are to be observed.

Further individual requirements are to be decided in consultation with the Society on a case by case basis in accordance with the provisions for liquefied gas tankers laid down in the Society's Rules.

3.3.2 Refrigerated cargo tanks and cargo tanks used for the transport of refrigerated liquefied gases shall be installed only in hold spaces bounded by double hull spaces and double bottom.

3.3.3 Cargo tanks intended to contain products at a temperature below –10°C shall be suitably insulated to ensure that the temperature of the vessel's structure does not fall below the minimum allowable material design temperature. The insulation material shall be resistant to flame spread.

3.4 Cargo tank openings

3.4.1

a) Cargo tank openings shall be located on deck in the cargo area.

b) Cargo tank openings with a cross-section greater than 0,10 m^2 shall be located not less than 0,50 m above the deck.

3.4.2 The exhaust outlets of the pressure relief valves shall be located not less than 2,00 m above the deck at a distance of not less than 6,00 m from the accommodation and from the service spaces located outside any hazardous area comparable to zone 0 or 1. This height may be reduced when within a radius of 1,00 m round the pressure relief valve outlet there is no equipment, no work is being carried out and signs indicate the area.

3.4.3 Where the list of substances accepted for carriage in the tanker includes those for which anti-explosion protection is prescribed in column (17) of Ch 3, App 3, Tab 2, the closing devices normally used in loading and unloading operations shall not be capable of producing sparks when operated.

3.4.4 Each tank in which refrigerated substances are carried shall be equipped with a safety system to prevent unauthorized vacuum or overpressure.

3.5 Membrane tanks

3.5.1 Definition

Membrane tanks are non-self supporting tanks that consists of a thin liquid and gastight layer (membrane) supported through insulation by the adjacent hull structure.

3.5.2 Structural design and arrangement

The structural design and arrangement of membrane tanks, where fitted, are to comply with NR467, Pt D, Ch 9, Sec 4, [12].

3.5.3 Testing

a) In vessels fitted with membrane cargo containment systems, all tanks and other spaces that may normally contain liquid and are adjacent to the hull structure supporting the membrane, shall be hydrostatically tested.

b) All hold structures supporting the membrane shall be tested for tightness before installation of the cargo containment system.

c) Pipe tunnels and other compartments that do not normally contain liquid need not be hydrostatically tested.

d) The testing of membrane is to comply with the requirements in Pt B, Ch 8, Sec 4.

4 Cargo piping system

4.1 General

4.1.1 Pumps, compressors and accessory loading and unloading piping shall be placed in an area between the fore vertical plane and the aft vertical plane bounding the part of the cargo area below deck. Cargo pumps and compressors shall be capable of being shut down from this area and, in addition, from a position outside this area. Cargo pumps and compressors situated on deck shall be located not less than 6,00 m from entrances to, or openings of, the accommodation and service spaces outside any hazardous area comparable to zone 0 or 1.

4.2 Arrangement of cargo piping

4.2.1 Piping for loading and unloading shall be independent of any other piping of the vessel. No cargo piping shall be located below deck, except those inside the cargo tanks and in the service spaces intended for the installation of the vessel's own gas discharging system.

4.2.2 Piping for loading and unloading shall be clearly distinguishable from other piping, e.g. by means of colour marking.

4.2.3 The piping for loading and unloading on deck, the venting pipes with the exception of the shore connections but including the safety valves, and the valves shall be located within the longitudinal line formed by the outer boundaries of the domes and not less than B/4 from the outer shell. This requirement does not apply to the relief pipes situated behind the safety valves. If there is, however, only one dome athwartships, these pipes and their valves shall be located at a distance not less than 2,70 m.

4.2.4 Where cargo tanks are placed side by side, all the connections to the domes shall be located on the inner side of the domes. The external connections may be located on the fore and aft centre line of the dome. The shut-off devices of the loading and unloading piping shall be duplicated, one of the devices being constituted by a remote-controlled quick closing valve. When the inside diameter of a shut-off device is less than 50 mm this device may be regarded as a safety against bursts in the piping.

4.2.5 The shore connections shall be located not less than 6 m from the entrances to or openings of, the accommodation and service spaces outside any hazardous area comparable to zone 0 or 1.

4.2.6 Each shore connection of the venting pipe and shore connections of the piping for loading and unloading, through which the loading or unloading operation is carried out, shall be fitted with a shut-off device and a quick closing valve. However, each shore connection shall be fitted with a blind flange when it is not in operation.

4.2.7 Piping for loading and unloading, and venting pipes, shall not have flexible connections fitted with sliding seals.

4.2.8 Use of the cargo piping for ballasting purposes shall not be possible.

4.2.9 For transport of refrigerated liquefied gases:

a) The piping for loading and unloading and cargo tanks shall be protected from excessive stresses due to thermal movement and from movements of the tank and hull structure.

b) Where necessary, piping for loading and unloading shall be thermally insulated from the adjacent hull structure to prevent the temperature of the hull falling below the design temperature of the hull material.

c) All piping for loading and unloading, which may be closed off at each end when containing liquid (residue), shall be provided with safety valves. These safety valves shall discharge into the cargo tanks and shall be protected against inadvertent closing.

4.3 Accessories

4.3.1 Cargo tank connections for gauging or measuring devices need not to be equipped with excess flow or emergency shut-off valves, provided that the devices are so constructed that the outward flow of tank contents cannot exceed that passed by a 1,5 mm diameter circular hole.

The stop valves or other shut-off devices of the pipes for loading and unloading shall indicate whether they are open or shut.

4.3.2 The piping for loading and unloading shall be fitted with pressure gauges at the inlet and outlet of the pump.

Reading of the pressure gauges shall be possible from the control position of the vessel's own gas discharging system. The maximum permissible overpressure or vacuum shall be indicated by a measuring device.

4.4 Bonding

4.4.1 Every component of the pipes for loading and unloading shall be electrically connected to the hull.

5 Cargo pressure and temperature control

5.1 Regulation of cargo pressure and temperature

5.1.1 Unless the entire cargo system is designed to resist the full effective vapour pressure of the cargo at the upper limits of the ambient design temperatures, the pressure of the tanks shall be kept below the permissible maximum set pressure of the safety valves, by one or more of the following means:

- a system for the regulation of cargo tank pressure using mechanical refrigeration
- a system ensuring safety in the event of the heating or increase in pressure of the cargo. The insulation or the design pressure of the cargo tank, or the combination of these two elements, shall be such as to leave an adequate margin for the operating period and the temperatures expected; in each case the system shall be deemed acceptable by the Society and shall ensure safety for a minimum time of three times the operation period

- for UN No. 1972 only, a system for the regulation of cargo tank pressure whereby the boil-off vapours are utilized as fuel
- other systems deemed acceptable by the Society.

5.1.2 The systems prescribed in [5.1.1] shall be constructed, installed and tested to the satisfaction of the Society. The materials used in their construction shall be compatible with the cargoes to be carried. For normal service, the upper ambient design temperature limits shall be:

- air: +30°C
- water: +20°C.

5.2 Refrigeration system

5.2.1 The refrigeration system referred to in [5.1.1] shall be composed of one or more units capable of keeping the pressure and temperature of the cargo at the upper limits of the ambient design temperatures at the prescribed level. Unless another means of regulating cargo pressure and temperature deemed satisfactory by the Society is provided, provision shall be made for one or more stand-by units with an output at least equal to that of the largest prescribed unit. Provision shall be made for a stand-by heat-exchanger unless the system's normal heat-exchanger has a surplus capacity equal to at least 25% of the largest prescribed capacity.

For all cargo systems, the heat transmission coefficient as used for the determination of the holding time shall be determined by calculation. Upon completion of the vessel, the correctness of the calculation shall be checked by means of a heat balance test. The calculation and test shall be performed under supervision by the Society. The heat transmission coefficient shall be documented and kept on board. The heat transmission coefficient shall be verified at every renewal of the certificate of approval.

Cargo tanks, piping and accessories shall be insulated so that, in the event of a failure of all cargo refrigeration systems, the entire cargo remains for at least 52 hours in a condition not causing the safety valves to open.

5.2.2 When several refrigerated cargoes with a potentially dangerous chemical reaction are carried simultaneously, particular care shall be given to the refrigeration systems so as to prevent any mixing of the cargoes. For the carriage of such cargoes, separate refrigeration systems, each including the full stand-by unit referred to in [5.2.1], shall be provided for each cargo.

5.2.3 When several refrigerated cargoes are not soluble in each other under conditions of carriage such that their vapour pressures are added together in the event of mixing, particular care shall be given to the refrigeration systems to prevent any mixing of the cargoes.

5.2.4 All primary and secondary coolant fluids shall be compatible with each other and with the cargo with which they may come into contact.

5.2.5 When the refrigeration system is installed in a separate service space, this service space shall meet the requirements of [2.3.6].

5.3 Water spray system

5.3.1 When water spraying is required in column (9) of Ch 3, App 3, Tab 2, a water spray system shall be installed in the cargo area on deck for the purpose of reducing gases given off by the cargo by spraying water.

5.3.2 The system shall be fitted with a connection device for supply from the shore. The spray nozzles shall be so installed that released gases are precipitated safely. The system shall be capable of being put into operation from the wheelhouse and from the deck. The capacity of the water-spray system shall be such that when all the spray nozzles are in operation, the outflow is not less than 50 liters per square meter of cargo deck area and per hour.

6 Pressure cargo tank venting system

6.1 Safety valves

6.1.1 The highest part of the vapour space (tank dome) of pressure vessels with a capacity of less than 20 m^3 is to be fitted with at least one, and pressure vessels with a capacity of more than 20 m^3 two independent, spring loaded safety valves. Means must be provided to prevent the accumulation of liquid cargo in the pipe upstream to the safety valves taking into account the vessel's trim and list.

6.2 Discharge capacity of safety valves

6.2.1 The total discharge capacity of the safety valves shall be according to the formula hereafter. During blowing down the pressure in the tank shall not rise more than 20% above the maximum allowable relief valve setting (MARVS).

$Q = F\ G\ A^{0,82}$

where:

Q : Minimum required equivalent discharge rate of air, in m^3/s, at standard conditions of 273°K and 1,013 bar

F : Fire exposure factor for different cargo tank types:

- F = 1,0 for uninsulated tanks located on deck
- F = 0,5 for tanks above the deck when insulation is approved by the Society (approval will be based on the use of an approved fire proofing material, the thermal conductance of insulation, and its stability under fire exposure)
- F = 0,5 for uninsulated independent tanks installed in holds
- F = 0,2 for insulated independent tanks in holds (or uninsulated independent tanks in insulated holds)
- F = 0,1 for insulated independent tanks in inerted holds (or uninsulated independent tanks in inerted, insulated holds).

For independent tanks partly protruding through the open deck, the fire exposure factor is to be determined on the basis of the surface areas above and below deck

G : Gas factor defined as:

$$G = \frac{12,4}{rD}\sqrt{\frac{ZT}{M}}$$

with:

T : Temperature in K (= 273 + °C) at the relieving conditions, i.e. 120% of the setting pressure

r : Latent heat of the material being vaporized at relieving conditions, in kJ/kg

D : Constant based on relation of specific heats k, shown in Tab 2; if k is not known, D = 0,606 shall be used.

The constant D may also be calculated by the following formula:

$$D = \sqrt{k\left(\frac{2}{k+1}\right)^{\frac{k+1}{k-1}}}$$

Z : Compressibility factor of the gas at relieving conditions; if not known, Z = 1,0 shall be used

M : Molecular weight of the product

A : External surface area of the tank in, m², for different tank types:

- for body of revolution type tanks, A is the external surface area
- for other than bodies of revolution type tanks, A is the external surface area less the projected bottom surface area
- for tanks consisting of an array of pressure vessels tanks, A is the external surface area of the hold less its projected bottom area
- insulation on the tank structure, A is the external surface area of the array of pressure vessels excluding insulation, less the projected bottom area as shown in Fig 1.

Figure 1 : Array of pressure vessels

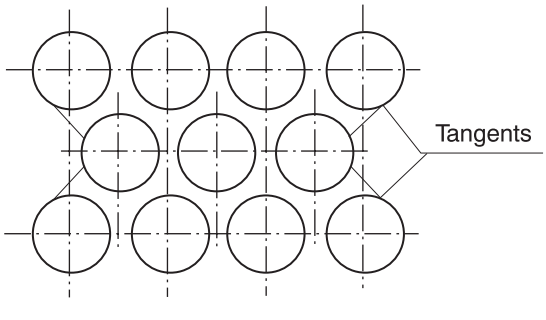

6.2.2 The setting of the pressure relief valves is not to be higher than the maximum pressure for which the cargo tank is designed.

6.2.3 It is recommended that a device may be fitted enabling one safety valve at a time to be isolated for a short period for repair/maintenance. In this case, however, at least half the required safety valve cross-section must remain operative.

Table 2 : Constant D

k	D	k	D
1,00	0,606	1,52	0,704
1,02	0,611	1,54	0,707
1,04	0,615	1,56	0,710
1,06	0,620	1,58	0,713
1,08	0,624	1,60	0,716
1,10	0,628	1,62	0,719
1,12	0,633	1,64	0,722
1,14	0,637	1,66	0,725
1,16	0,641	1,68	0,728
1,18	0,645	1,70	0,731
1,20	0,649	1,72	0,734
1,22	0,652	1,74	0,736
1,24	0,656	1,76	0,739
1,26	0,660	1,78	0,742
1,28	0,664	1,80	0,745
1,30	0,667	1,82	0,747
1,32	0,671	1,84	0,750
1,34	0,674	1,86	0,752
1,36	0,677	1,88	0,755
1,38	0,681	1,90	0,758
1,40	0,685	1,92	0,760
1,42	0,688	1,94	0,763
1,44	0,691	1,96	0,765
1,46	0,695	1,98	0,767
1,48	0,698	2,00	0,770
1,50	0,701	2,02	0,772
		2,20	0,792

6.3 Safety valves blow-off lines

6.3.1 The blow-off lines of pressure vessel safety valves may be arranged individual or with common headers. The outlets are to be arranged at least 2,00 m above deck at a horizontal distance of 6 m from accommodation or other safe spaces. The height may be reduced to less than 2,00 m in case the area of 1,00 m around the high velocity valve is designed as non-accessible.

6.3.2 The total cross-section of the blow-off piping must be sufficient to discharge safely the quantity of gas calculated in [6.2].

7 Environmental control

7.1 Inerting facilities

7.1.1 In cases in which inerting or blanketing of the cargo is prescribed, the vessel shall be equipped with an inerting system.

7.1.2 This system shall be capable of maintaining a permanent minimum pressure of 7 kPa (0,07 bar) in the spaces to be inerted. In addition, the inerting system shall not increase the pressure in the cargo tank to a pressure greater than that at which the pressure valve is regulated. The set pressure of the vacuum-relief valve shall be 3,5 kPa (0,035 bar).

7.1.3 The premises to be inerted shall be equipped with connections for introducing the inert gas and monitoring systems so as to ensure the correct atmosphere on a permanent basis.

7.1.4 Vessels equipped with membrane tanks shall have an inerting system capable of inerting all insulation spaces of the tanks.

The system shall be capable of keeping permanently a minimum pressure above atmospheric pressure in the spaces to be inerted.

8 Electrical installations

8.1 Type and location of electrical installations and equipment

8.1.1 Electrical installations and equipment shall be of at least the "limited explosion risk" type.

This provision does not apply to:

a) Lighting installations in the accommodation and the wheelhouse, except for switches near to the entrances

b) Mobile phones, fixed telephone installations, stationary and portable computers and loading instruments in the accommodation or the wheelhouse

c) Electrical installations and equipment which, during a stay in the immediate vicinity of or within a shoreside assigned zone:

   1) are extinguished; or

   2) are placed in premises equipped with a ventilation system according to [2.5]

d) Radiotelephone installations and inland AIS (automatic identification systems) stations in the accommodation and the wheelhouse, if no part of an aerial for radiotelephone installations or AIS stations is situated above or within 2.00 m of the cargo area.

8.1.2 In the cofferdams, double-hull spaces, double bottoms and hold spaces, only hermetically sealed echo sounding devices are allowed, the cables of which are led through thick-walled steel tubes with gastight connections up to the main deck.

8.1.3 The fixed electrical installations and equipment which do not meet the requirements set out in [8.1.1] and their switches shall be marked in red. The disconnection of such equipment shall be controlled from a centralized location on board.

8.1.4 Every insulated distribution network shall be fitted with an automatic device with a visual and audible alarm for checking the insulation level.

8.1.5 Only distribution systems without return connection to the hull are permitted. This provision does not apply to:

- Active cathodic corrosion protection
- Certain limited sections of the installations situated outside the cargo area (e.g., connections of starters of diesel engines)
- The device for checking the insulation level referred to in [8.1.4].

8.1.6 An electric generator which is permanently driven by an engine and which does not meet the requirements of [8.1.1], shall be fitted with a switch capable of shutting down the generator. A notice board with the operating instructions shall be displayed near the switch.

8.1.7 Failure of the power supply for the safety and control equipment shall be immediately indicated by visual and audible signals in the wheelhouse and on the deck. The alarm must be relayed to the accommodation automatically if it has not been switched off.

8.1.8 Electrical switches, sockets and cables on deck shall be protected against mechanical damage.

8.1.9 Sockets for the connection of signal lights and gangway lighting shall be solidly fitted to the vessel close to the signal mast or the gangway. The sockets used in this area shall be designed so as to prevent connection or disconnection except when they are not live.

8.2 Type and location of electrical and non-electrical installations and equipment intended to be used in explosion hazardous areas

8.2.1 On board vessels covered by the classification of zones as defined in Ch 3, App 1, Tab 1, electrical and non-electrical installations and equipment used in explosion hazardous areas shall meet at least the requirements for use in the area concerned.

They shall be selected on the basis of the explosion groups/subgroups and temperature classes to which the substances to be carried belong (see columns (15) and (16) of Ch 3, App 3, Tab 2).

If the list of substances on the vessel according to Ch 3, Sec 1, [4.3.2] is going to include substances for which temperature classes T4, T5 or T6 are indicated in column (15) of Ch 3, App 3, Tab 2, then the corresponding surface temperatures within the assigned zones shall not exceed 135°C (T4), 100° (T5) or 85°C (T6).

If the list of substances on the vessel according to Ch 3, Sec 1, [4.3.2] is going to include substances for which temperature classes T1 or T2 are indicated in column (15) of Ch 3, App 3, Tab 2, then the corresponding surface temperatures within the assigned zones shall not exceed 200°C.

8.2.2 Except in the case of optical fibres, electrical cables shall be armoured or placed in a metallic sheath or in protective tubes.

Electrical cables for the active cathodic protection of the shell plating shall be led through thick-walled steel tubes with gastight connections up to the main deck.

8.2.3 Movable electric cables are prohibited in the explosion danger area, except for electric cables for intrinsically safe electric circuits or for connecting:

- Signal lights and lighting for gangways, provided the connection point (for example, the socket) is permanently fitted to the vessel close to the signal mast or gangway
- The power network on a vessel to a land-based power network; provided
  - The electric cables and the power supply unit conform with a valid standard
  - The power supply unit and connectors are located outside of the explosion danger area.

Connecting and disconnecting sockets/connectors shall only be possible when they are not live.

8.2.4 Electrical cables of intrinsically safe circuits shall be separated from other cables not intended for use in such circuits and shall be marked (they shall not be installed together in the same string of cables and they shall not be fixed by the same cable clamps).

8.2.5 For movable electrical cables permitted under, only sheathed cables of type H07RN-F in accordance with standard IEC 60245-4:2011 or electrical cables of at least equivalent design having conductors with a cross-section of not less than 1.50 mm^2 shall be used.

8.3 Earthing

8.3.1 The metal parts of electrical installations and equipment in the cargo area which are not live, as well as the protective metal tubes or metal sheaths of cables, in normal service shall be earthed, unless they are so arranged that they are automatically earthed by bonding to the metal structure of the vessel.

8.3.2 The provisions of [8.3.1] also apply to installations with a voltage of less than 50 V.

8.3.3 Independent cargo tanks, metal intermediate bulk containers and tank-containers shall be earthed.

8.3.4 Receptacles for residual products shall be capable of being earthed.

8.4 Storage batteries

8.4.1 Storage batteries shall be located outside any hazardous area comparable to zone 0 or 1.

9 Fire protection and fire extinction

9.1 Fire and naked light

9.1.1 The outlets of funnels shall be located not less than 2,00 m from any hazardous area comparable to zone 0 or 1. Arrangements shall be provided to prevent the escape of sparks and the entry of water.

9.1.2 Heating, cooking and refrigerating appliances shall not be fuelled with liquid fuels, liquid gas or solid fuels.

The installation in the engine room or in another separate space of heating appliances fuelled with liquid fuel having a flash-point above 55°C is, however, permitted.

Cooking and refrigerating appliances are permitted only in the accommodation.

9.1.3 Only electrical lamps are permitted.

9.2 Fire extinguishing arrangements

9.2.1 In addition to the requirements of Part C, Chapter 4, the fire extinguishing arrangements in [9.3] to [9.5] are to be complied with.

9.3 Portable fire extinguishers

9.3.1 In addition to the fire-extinguishing appliances prescribed in Pt C, Ch 4, Sec 4, [2], each vessel shall be equipped with at least two additional portable fire-extinguishers having the same capacity in the cargo area.

These additional portable fire-extinguishers shall be suitable for fighting fires involving the dangerous goods carried.

9.4 Fire extinguishing system

9.4.1 A fire-extinguishing system complying with the following requirements shall be installed on the vessel:

- It shall be supplied by two independent fire or ballast pumps, one of which shall be ready for use at any time. These pumps and their means of propulsion and electrical equipment shall not be installed in the same space.
- It shall be provided with a water main fitted with at least three hydrants in the cargo area above deck. Three suitable and sufficiently long hoses with spray nozzles having a diameter of not less than 12 mm shall be provided It shall be possible to reach any point of the deck in the cargo area simultaneously with at least two jets of water not supplied from the same hydrant.

  A spring-loaded non-return valve shall be fitted to ensure that no gases can escape through the fire-extinguishing system into the accommodation or service spaces outside the cargo area.
- The capacity of the system shall be at least sufficient for a jet of water to have a minimum reach of not less than the vessel's breadth from any location on board with two spray nozzles being used at the same time.

9.5 Fixed fire extinguishing system

9.5.1 In addition the machinery spaces, the cargo pump room and the cargo compressor room shall be provided with a permanently fixed fire-extinguishing system, in compliance with Pt C, Ch 4, Sec 4, [4].

10 Safety and control installations

10.1 General

10.1.1 Cargo tanks shall be provided with the following equipment:

a) a level gauge

b) a level alarm device which is activated at the latest when a degree of filling of 86% is reached

c) a high level sensor for actuating the facility against overflowing at the latest when a degree of filling of 97,5% is reached

d) an instrument for measuring the pressure of the gas phase in the cargo tank

e) an instrument for measuring the temperature of the cargo

f) a connection for a closed-type sampling device. The connection shall be fitted with a shut-off device resistant to the internal pressure at the connection.

10.2 Cargo tank level indicators

10.2.1 Each cargo tank is to be equipped with a closed gauging device approved by the Society. If only one device is installed per tank, it shall be so arranged/designed that any failure can be rectified and its function can be restored when tank under pressure.

The level gauge shall allow readings from the control position of the shut-off devices of the particular cargo tank. The permissible maximum filling levels of 91%, 95% and 97%, as given in the list of substances, shall be marked on each level gauge.

10.3 Level alarm device

10.3.1 Cargo tank shall be provided with a level alarm device which is activated at the latest when a degree of filling of 86% is reached.

The level alarm device shall give a visual and audible warning on board when actuated. The level alarm device shall be independent of the level gauge.

10.4 High level sensor

10.4.1 Cargo tank shall be provided with a high level sensor for actuating the facility against overflowing at the latest when a degree of filling of 97,5% is reached.

10.5 Cargo tank pressure monitoring

10.5.1 Each cargo tank shall be equipped with a pressure indicator for the vapour space activating a high pressure alarm when the working pressure is exceeded.

Pressure indicators shall be fitted on loading and discharge lines, pumps, compressors and manifold connections marked with the maximum permissible working pressure.

10.6 Cargo temperature monitoring

10.6.1 Temperature indicating devices in each cargo tank shall be provided for the mean temperature of the cargo.

10.7 Cargo tank sampling equipment

10.7.1 Each cargo tank shall be equipped with a connection for a closed-type sampling device.

10.8 Safety valves

10.8.1 Cargo pumps and compressors must be fitted with safety valves discharging to their suction side, in compliance with [6.2].

Pipeline sections of more than 50 litres volume which may be isolated in liquid full condition are to be provided with safety relief valves. The blow-off lines are to be returned to the cargo tanks or a blow down header.

10.9 Gas detection and alarm system

10.9.1 For the hold spaces of pressure vessel cargo tanks, portable gas detectors are to be approved by the Society.

10.10 Other protective measures

10.10.1 On vessels certified to carry refrigerated liquefied gases the following protective measures shall be provided in the cargo area:

a) Drips trays shall be installed under the shore connections of the piping for loading and unloading through which the loading and unloading operation is carried out. They must be made of materials which are able to resist the temperature of the cargo and be insulated from the deck. The drip trays shall have a sufficient volume and an overboard drain.

b) A water spray system to cover:

- exposed cargo tank domes and exposed parts of cargo tanks
- exposed on-deck storage vessels for flammable or toxic products
- parts of the cargo deck area where a leakage may occur.

c) A water film around the shore connection of the piping for loading and unloading in use to protect the deck and the vessel side in the way of the shore connection of the piping for loading and unloading in use during connecting and disconnecting the loading arm or hose. The water film shall have sufficient capacity.

11 Buoyancy and stability

11.1 General

11.1.1 General requirements of Pt B, Ch 2, Sec 2, [1] to Pt B, Ch 2, Sec 2, [3] are to be complied with.

11.1.2 Proof of sufficient stability shall be furnished including for stability in damaged condition.

11.1.3 The basic values for the stability calculation (the vessel's lightweight and location of the centre of gravity) shall be determined in compliance with Pt B, Ch 2, Sec 2, [2.2].

11.1.4 Proof of sufficient intact stability shall be furnished for all stages of loading and unloading and for the final loading condition for all the relative densities of the substances transported contained in the vessel substance list according to Ch 3, Sec 1, [4.3.2].

11.1.5 For every loading case, taking account of the actual fillings and floating position of cargo tanks, ballast tanks and compartments, drinking water and sewage tanks and tanks containing products for the operation of the vessel, the vessel shall comply with the intact and damage stability requirements.

Intermediate stages during operations shall also be taken into consideration.

11.2 Intact stability

11.2.1 The requirements for intact stability resulting from the damaged stability calculation shall be fully complied with.

11.3 Damage stability

11.3.1 The following assumptions shall be taken into consideration for the damaged condition:

a) Extent of side damage:
   - longitudinal extent: at least 0,10 L_{OA} but not less than 5,00 m
   - transverse extent: B_2 – 0,01 m, inboard from the vessel's side at right angles to the centreline at the level corresponding to the maximum draught
   - vertical extent: from base line upwards without limit.

b) Extent of bottom damage:
   - longitudinal extent: at least 0,10 L_{OA} but not less than 5,00 m
   - transverse extent: 3,00 m
   - vertical extent: from base line to D_2 – 0,01 m upwards, except for pump well.

c) Any bulkhead within the damaged area shall be assumed damaged, which means that the location of bulkheads shall be chosen so as to ensure that the vessel remains afloat after the flooding of two or more adjacent compartments in the longitudinal direction.

   The following provisions are applicable:
   - for bottom damage, adjacent athwartship compartments shall also be assumed flooded
   - the lower edge of any non-watertight opening (e.g. windows, doors and access hatchways) shall, at the final stage of flooding, be not less than 0,10 m above the damage waterline.

11.3.2 In general, permeability shall be assumed to be 95%. Where an average permeability of less than 95% is calculated for any compartment, this calculated value obtained may be used.

However, the minimum values of permeability μ given in Tab 3 are to be used.

For the main engine room only the one-compartment standard need be taken into account, i.e. the end bulkheads of the engine room shall be assumed as not damaged.

Table 3 : Permeability μ

Spaces	μ, in %
Engine rooms	85
Accommodation spaces	95
Double bottoms, oil fuel tanks, ballast tanks, etc., depending on whether, according to their function, they have to be assumed as full or empty for the vessel floating at the maximum permissible draught	0 or 95

11.3.3 The damage stability is generally regarded sufficient if (see Fig 2):

- At the stage of equilibrium (in the final stage of flooding), the angle of heel is not greater than 12°.

  Non-watertight openings shall not be flooded before reaching the stage of equilibrium. If such openings are immersed before the stage of equilibrium, the corresponding spaces shall be considered flooded for the purpose of stability calculation.
- The positive range of the righting lever curve beyond the stage of equilibrium has a righting lever of ≥ 0,05 m in association with an area under the curve of ≥ 0,0065 m·rad. The minimum values of stability shall be satisfied up to immersion of the first unprotected (non-weathertight) opening and in any event up to an angle of heel ≤ 27°. If non-weathertight openings are immersed before that stage, the corresponding spaces shall be considered flooded for the purpose of stability calculation.

11.3.4 If openings through which undamaged compartments may additionally become flooded are capable of being closed watertight, the closing appliances shall be marked accordingly.

11.3.5 Where cross- or down-flooding openings are provided for reduction of unsymmetrical flooding, the time of equalisation shall not exceed 15 minutes, provided during the intermediate stages of flooding sufficient stability has been proved.

Figure 2 : Proof of damage stability

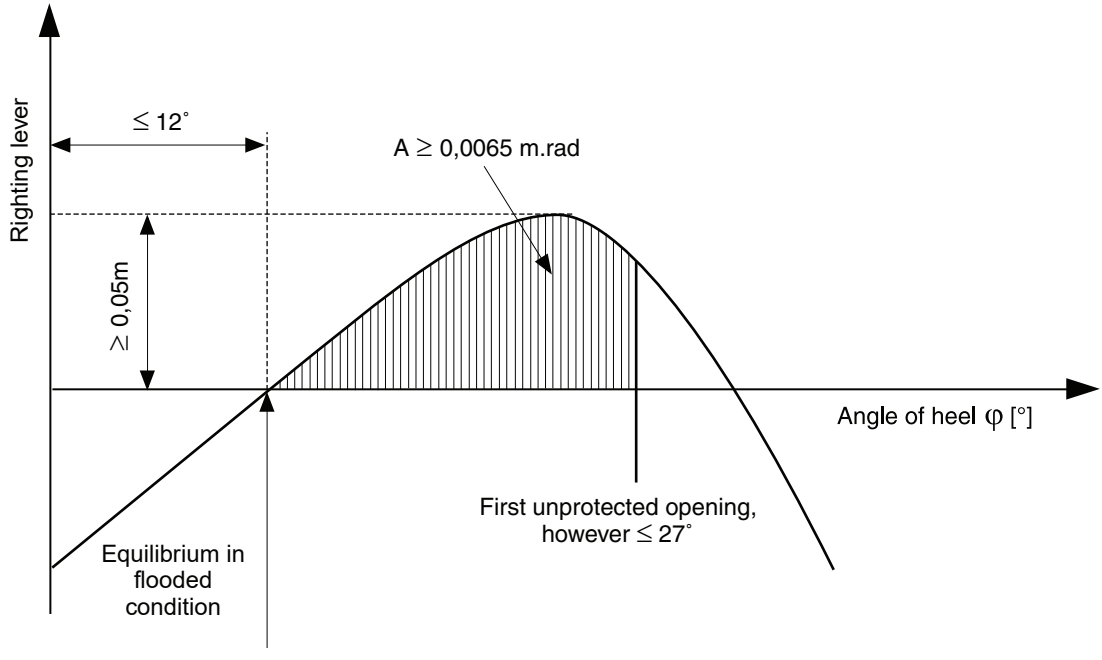

SECTION 3 DG-C

Symbols

L_{OA} : Length overall, in m, defined in Pt B, Ch 1, Sec 2, [2.5]

B : Breadth, in m, defined in Pt B, Ch 1, Sec 2, [2.2]

B_2 : Breadth of the side tank, in m

D_2 : Height of the double bottom, in m.

1 General

1.1 Application

1.1.1 Vessels complying with the requirements of this Section are eligible for the assignment of the additional service feature **DG-C**, as defined in Pt A, Ch 1, Sec 3, [3.2.14].

1.1.2 These Rule requirements apply in addition to Ch 1, Sec 3 and Ch 3, Sec 1.

1.2 Documents to be submitted

1.2.1 Tab 1 lists the plans and documents to be submitted in addition to the documents required in the other Parts of the Rules for the parts of the vessel not affected by the cargo, as applicable.

2 Vessel arrangement

2.1 Protection against the penetration of dangerous gases and the spreading of dangerous liquids

2.1.1 The vessel shall be designed so as to prevent dangerous gases and liquids from penetrating into the accommodation, wheelhouse and the service spaces. None of the windows in these spaces shall be capable of being opened unless its intended use is as an emergency exit and it is marked as such.

2.1.2 Liquid-tight protective coamings shall be fitted on deck at the height of the external bulkheads of the cargo tanks, at a maximum distance of 0,60 m from the outer cofferdam bulkheads or the hold end bulkheads. The protective coamings shall either extend over the entire width of the vessel or be fixed between the longitudinal spill coamings so as to prevent liquids from entering the forepeak and afterpeak. The height of the protective coamings and the spill coamings shall be at least 0,075 m. The protective coaming may correspond to the protection wall prescribed in [2.1.3] if the protection wall extends across the entire width of the vessel.

2.1.3 If the list of substances on the vessel according to Ch 3, Sec 1, [4.3.2] is going to include substances that require explosion protection in accordance with column (17) of Ch 3, App 3, Tab 2, then the use of installations and equipment that are not of at least the "limited explosion risk" type is not permitted during loading and unloading operations in parts of the deck outside the cargo area, unless those parts are protected against the penetration of gases and liquids by a gas- and liquid-tight protection wall. The wall must either extend over the full width of the vessel or surround the areas to be protected in a U-shaped form. The wall must cover the whole width of the area to be protected and at least 1.00 m in the direction opposite to the cargo area (see Ch 3, App 1, Fig 1). The height of the wall shall be at least 1.00 m above the adjacent cargo deck area in the cargo area. The outer wall and side walls of the accommodation can be considered as a protection wall if they do not include openings and if the dimensions are complied with.

A protection wall is not required where the distance between the areas to be protected and the high velocity vent valve, the shore connections of the piping for loading and unloading, the compressor on deck and the opening of the closest pressure tanks is at least 12.00 m.

2.1.4 On deck, the lower edges of door-openings in the sidewalls of superstructures and the sills of hatches and ventilation openings of premises located under the deck shall have a height of not less than 0,50 m above the deck.

This requirement does not apply to access openings to double-hull spaces and double bottoms.

2.1.5 The bulwarks, foot-rails, etc., shall be provided with sufficiently large openings which are located directly above the deck.

2.2 Engine rooms

2.2.1 Internal combustion engines for the vessel's propulsion as well as internal combustion engines for auxiliary machinery shall be located outside the cargo area. Entrances and other openings of engine rooms shall be at a distance of not less than 2,00 m from any hazardous area comparable to zone 0 or 1.

2.2.2 The engine rooms shall be accessible from the deck; the entrances shall not face the cargo area. When the doors are not located in a recess whose depth is at least equal to the door width, the hinges shall face the cargo area.

Table 1 : Plans and documents to be submitted

No.	A/I	Documents
1	I	List of substances intended to be carried with their UN number (see Ch 3, App 3, Tab 2), including all design characteristics of substances and other important design conditions
2	I	General arrangement plan, showing location of cargo tanks and fuel oil, ballast and other tanks, void spaces
3	A	Hazardous areas plan and location of the electrical equipment installed in these areas
4	A	Ventilation duct arrangement in gas-dangerous spaces and adjacent zones
5	A	Details of hull structure in way of cargo tanks, including support arrangement for tanks, saddles, anti-floating and anti-lifting devices, deck sealing arrangements, independent cargo tanks, etc.
6	A	Intact and damage stability calculations
7	A	Scantlings, material and arrangement of the cargo containment system
8	A	Details of cargo handling system, including arrangements and details of piping and fittings
9	A	Details of cargo pumps
10	A	Details of temperature and pressure control systems
11	A	Bilge and ballast system in cargo area
12	A	Gas freeing system in cargo tanks including inert gas system
13	A	Ventilation system in cargo area
14	A	List of the electrical equipment installed in hazardous areas comparable to zone 0 and 1, including the following equipment particulars: location, type of protection, type of protection against explosion, testing body and approval number
15	A	Schematic electrical wiring diagram
16	A	Pressure drop calculation note
17	A	Gas detection system
18	A	Cargo tank instrumentation
19	A	Details of fire-extinguishing appliances and systems in cargo area
20	A	Arrangement drawing of the various fire bulkheads and decks with standard fire test reports for the various arrangements, surface coverings, paints and similar
21	I	Loading and unloading operation description, including cargo tank filling limits, where applicable
22	A	Gas return system
23	A	List of equipment installed in hazardous areas comparable to zone 2 which may be used during loading, unloading and gas-freeing and red equipment

Note 1:
A = to be submitted for review
I = to be submitted for information

2.3 Accommodation and service spaces

2.3.1 Accommodation spaces and the wheelhouse shall be located outside the cargo area, see Ch 3, App 1, [1.7] for definition, forward of the fore vertical plane or abaft the aft vertical plane bounding the part of cargo area below deck. Windows of the wheelhouse which are located not less than 1,00 m above the bottom of the wheelhouse may tilt forward.

2.3.2 Entrances to spaces and openings of superstructures shall not face the cargo area. Doors opening outward and not located in a recess the depth of which is at least equal to the width of the doors shall have their hinges facing the cargo area.

2.3.3 Entrances from the deck and openings of spaces facing the weather shall be capable of being closed.

2.3.4 Entrances and windows of superstructures and accommodation spaces which can be opened as well as other openings of these spaces shall be located not less than 2,00 m from any hazardous area comparable to zone 0 or 1. No wheelhouse doors and windows shall be located within 2,00 m from any hazardous area comparable to zone 0 or 1, except where there is no direct connection between the wheelhouse and the accommodation.

2.3.5

a) Driving shafts of the bilge or ballast pumps in the cargo area may penetrate through the bulkhead between the service space and the engine room, provided the arrangement of the service space is in compliance with [2.4.6].

b) The penetration of the shaft through the bulkhead shall be gastight and shall have been approved by the Society.

c) Penetrations through the bulkhead between the engine room and the service space in the cargo area, and the bulkhead between the engine room and the hold spaces may be provided for electrical cables, hydraulic and piping for measuring, control and alarm systems, provided that the penetrations have been approved by the Society. The penetrations shall be gastight. Penetrations through a bulkhead with an "A-60" fire protection insulation (see Pt C, Ch 4, Sec 1, [2.2]), shall have an equivalent fire protection.

d) Pipes may penetrate the bulkhead between the engine room and the service space in the cargo area provided that these are pipes between the mechanical equipment in the engine room and the service space which do not have any openings within the service space and which are provided with shut-off devices at the bulkhead in the engine room.

e) Notwithstanding [2.4.4], pipes from the engine room may penetrate the service space in the cargo area or a cofferdam or a hold space or a double-hull space to the outside provided that within the service space or cofferdam or hold space or doublehull space they are of the thick-walled type and have no flanges or openings.

f) Where a driving shaft of auxiliary machinery penetrates through a wall located above the deck the penetration shall be gastight.

2.3.6 A service space located within the cargo area below deck shall not be used as a cargo pump room for the loading and unloading system, except where:

- the cargo pump room is separated from the engine room or from service spaces outside the cargo area by a cofferdam or a bulkhead with an "A-60" fire protection insulation (see Pt C, Ch 4, Sec 1, [2.2]), or by a service space or a hold space
- the "A-60" bulkhead required above does not include penetrations referred to in [2.3.5], item a)
- ventilation exhaust outlets are located not less than 6.00 m from entrances and openings of the accommodation and service spaces outside the cargo area
- the access hatches and ventilation inlets can be closed from the outside
- all piping for loading and unloading as well as those of stripping systems are provided with shut-off devices at the pump suction side in the cargo pump room immediately at the bulkhead. The necessary operation of the control devices in the pump room, starting of pumps and necessary control of the liquid flow rate shall be effected from the deck
- the bilge of the cargo pump room is equipped with a gauging device for measuring the filling level which activates a visual and audible alarm in the wheelhouse when a liquid is accumulating in the cargo pump room bilge
- the cargo pump room is provided with a permanent gas detection system which automatically indicates the presence of explosive gases or lack of oxygen by means of direct-measuring sensors and which actuates a visual and audible alarm when the gas concentration has reached 20% of the lower explosive limit. The sensors of this system shall be placed at suitable positions at the bottom and directly below the deck.

  Measurement shall be continuous.

  The audible and visual alarms are installed in the wheelhouse and in the cargo pump room and, when the alarm is actuated, the loading and unloading system is shut down. Failure of the gas detection system shall be immediately signalled in the wheelhouse and on deck by means of audible and visual alarms.
- the ventilation system prescribed in [2.5] has a capacity of not less than 30 changes of air per hour based on the total volume of the service space.

2.4 Hold spaces

2.4.1 The cargo tanks shall be separated by cofferdams of at least 0,60 m in width from the accommodation, engine room and service spaces outside the cargo area below deck or, if there are no such accommodation, engine room and service spaces, from the vessel's ends. Where the cargo tanks are installed in a hold space, a space of not less than 0,50 m shall be provided between such tanks and the end bulkheads of the hold space. In this case an end bulkhead meeting at least the definition for Class "A-60" (see Pt C, Ch 4, Sec 1, [2.2]), shall be deemed equivalent to a cofferdam. For pressure cargo tanks, the 0,50 m distance may be reduced to 0,20 m.

2.4.2 Hold spaces, cofferdams and cargo tanks shall be capable of being inspected.

2.4.3 All spaces in the cargo area shall be capable of being ventilated. Means for checking their gas-free condition shall be provided.

2.4.4 The bulkheads bounding the cargo tanks, cofferdams and hold spaces shall be watertight. The cargo tanks and the bulkheads bounding the cargo area shall have no openings or penetrations below deck.

The bulkhead between the engine room and the cofferdam or service space in the cargo area or between the engine room and a hold space may be fitted with penetrations provided that they conform to the provisions of [2.3.5].

The bulkhead between the cargo tank and the cargo pumproom below deck may be fitted with penetrations provided that they conform to the provisions of [2.3.6]. The bulkheads between the cargo tanks may be fitted with penetrations provided that the loading or unloading pipes are fitted with shut-off devices in the cargo tank from which they come. The shut-off devices shall be operable from the deck.

2.4.5 Double hull spaces and double bottoms in the cargo area shall be arranged for being filled with ballast water only. Double bottoms may, however, be used as fuel oil tanks, provided they comply with [2.7].

2.4.6

a) A cofferdam, the centre part of a cofferdam or another space below deck in the cargo area may be arranged as a service space, provided the bulkheads bounding the service space extend vertically to the bottom. This service space shall only be accessible from the deck.

b) The service space shall be watertight with the exception of its access hatches and ventilation inlets.

c) No piping for loading and unloading shall be fitted within the service space referred to under (a) above.

   Piping for loading and unloading may be fitted in the cargo pump-rooms below deck only when they conform to the provisions of [2.3.6].

2.4.7 Where service spaces are located in the cargo area under deck, they shall be arranged so as to be easily accessible and to permit persons wearing protective clothing and breathing apparatus to safely operate the service equipment contained therein. They shall be designed so as to allow injured or unconscious personnel to be removed from such spaces without difficulty, if necessary by means of fixed equipment.

2.4.8 Cofferdams, double-hull spaces, double bottoms, cargo tanks, hold spaces and other accessible spaces within the cargo area shall be arranged so that they may be completely inspected and cleaned in an appropriate manner. The dimensions of openings, except for those of double hull spaces and double bottoms which do not have a wall adjoining the cargo tanks, shall be in compliance with Pt B, Ch 2, Sec 1, [3.2.2].

2.5 Ventilation

2.5.1 Each hold space shall have two openings the dimensions and location of which shall be such as to permit effective ventilation of any part of the hold space. If there are no such openings, it shall be possible to fill the hold spaces with inert gas or dry air.

2.5.2 Double-hull spaces and double bottoms within the cargo area which are not arranged for being filled with ballast water, hold spaces and cofferdams shall be provided with ventilation systems.

2.5.3 A service space located within the cargo area below deck shall be provided with a ventilation system. The capacity of the fans shall be sufficient to ensure 20 complete changes of air per hour based on the volume of the service space.

The ventilation exhaust ducts shall extend down to 50 mm above the bottom of the service space. The air shall be supplied through a duct at the top of the service space.

If the list of substances on the vessel according to Ch 3, Sec 1, [4.3.2] is going to include substances that require explosion protection in accordance with column (17) of Ch 3, App 3, Tab 2, then the air inlets shall be located not less than 2.00 m above the deck, at a distance of not less than 2.00 m from tank openings and 6.00 m from the outlets of safety valves.

The extension pipes which may be necessary may be of the hinged type.

2.5.4 Ventilation of accommodation and service spaces shall be possible.

2.5.5 All ventilation inlets of accommodation, wheelhouse and service spaces leading to the open air outside the cargo area shall be fitted with devices permanently fixed according to Pt C, Ch 4, Sec 4, [4.2], enabling them to be closed rapidly. It shall be clear whether they are open or closed.

Such ventilation inlets shall be located not less than 2.00 m from the cargo area.

Ventilation inlets of service spaces in the cargo area may be located within that area.

2.5.6 The flame-arresters prescribed in [3.6.4] and [3.6.5] shall be of a type approved for this purpose by the Society.

2.6 Engines

2.6.1 Only internal combustion engines running on fuel having a flash point above 55°C are allowed. This provision does not apply to internal combustion engines which are part of propulsion and auxiliary systems fitted onboard vessels assigned one of the additional service features **Dualfuel** or **Gasfuel** according to Pt A, Ch 1, Sec 3, [1.3.5].

2.6.2 Ventilation inlets of the engine room and, when the engines do not take in air directly from the engine room, the air intakes of the engines shall be located not less than 2,00 m from any hazardous area comparable to zone 0 or 1.

2.7 Oil fuel tanks

2.7.1 When the vessel is provided with hold spaces, the double bottoms within these spaces may be arranged as oil fuel tanks, provided their depth is not less than 0,60 m.

Oil fuel pipes and openings of such tanks are not permitted in the hold space.

2.7.2 The open ends of the air pipes of all oil fuel tanks shall extend to not less than 0,50 m above the open deck. Their open ends and the open ends of overflow pipes leading on the deck shall be fitted with a protective device consisting of a gauze diaphragm or a perforated plate.

2.8 Exhaust pipes

2.8.1 Exhausts shall be evacuated from the vessel into the open air either upwards through an exhaust pipe or through the shell plating. The exhaust outlet shall be located not less than 2,00 m from any hazardous area comparable to zone 0 or 1. The exhaust pipes of engines shall be arranged so that the exhausts are led away from the vessel. The exhaust pipes shall not be located within any hazardous area comparable to zone 0 or 1.

2.8.2 Exhaust pipes shall be provided with a device preventing the escape of sparks, e.g. spark arresters.

2.9 Bilge pumping and ballasting arrangements

2.9.1 Bilge and ballast pumps for spaces within the cargo area shall be installed within such area.

This provision does not apply to:

- double hull spaces and double bottoms which do not have a common boundary wall with the cargo tanks
- cofferdams, double hull spaces, hold spaces and double bottoms where ballasting is carried out using the piping of the fire fighting system in the cargo area and bilge-pumping is performed using eductors which are installed in the cargo area.

2.9.2 Where the double bottom is used as oil fuel tank, it shall not be connected to the bilge piping system.

2.9.3 Where the ballast pump is installed in the cargo area, the standpipe and its outboard connection for suction of ballast water shall be located within the cargo area but outside the cargo tanks.

2.9.4 A cargo pump room below deck shall be capable of being drained in an emergency by an installation located in the cargo area and independent from any other installation. This installation shall be provided outside the cargo pump-room.

2.10 Ventilation of cargo pump rooms

2.10.1 Cargo pump rooms must be provided with extraction type ventilation systems, independent of other vessel's spaces, providing at least 30 cycles of air change per hour. Warning notices shall be placed requiring that the ventilation is in operation for at least 15 minutes prior to entering these spaces.

2.10.2 Portable means must be provided for gas-freeing of cargo tanks and other spaces not equipped with fixed ventilation.

2.11 Arrangements of cofferdams

2.11.1 Cofferdams or cofferdam compartments remaining once a service space has been arranged in accordance with [2.4.6] shall be accessible through an access hatch.

2.11.2 No fixed pipe shall permit connection between a cofferdam and other piping of the vessel outside the cargo area.

3 Cargo containment

3.1 General

3.1.1 The scantlings and structural arrangements are to be in compliance with applicable requirements of Ch 1, Sec 3, [6] to Ch 1, Sec 3, [11].

3.2 Cargo area hull design

3.2.1 General

In the cargo area, the vessel shall be designed according to [3.2.2] to [3.2.10].

Alternative constructions will be specially considered by the Society on a case-by-case basis.

3.2.2 In the cargo area with the exception of the cofferdams, the vessel shall be designed as a flush-deck double-hull tanker, i.e. with double hull spaces and double bottoms but without trunk.

3.2.3 Cargo tanks independent of the vessel’s hull and refrigerated cargo tanks may only be installed in a hold space which is bounded by double hull spaces and double bottoms in accordance with [3.2.7]. The cargo tanks shall not extend above the deck.

3.2.4 Side-struts linking or supporting the load-bearing components of the sides of the vessel with the load-bearing components of the longitudinal walls of cargo tanks and side-struts linking the load-bearing components of the vessel’s bottom with the tank-bottom are prohibited.

3.2.5 A local recess in the cargo deck, contained on all sides, with a depth greater than 0,10 m, designed to house the loading and unloading pump, is permitted if it fulfils the following conditions:

- The recess shall not be greater than 1,00 m in depth.
- The recess shall be located not less than 6,00 m from entrances to and openings of accommodation and service spaces outside the cargo area.
- The recess shall be located at a minimum distance from the side plating equal to one quarter of the vessel’s breadth.
- All pipes linking the recess to the cargo tanks shall be fitted with shut-off devices fitted directly on the bulkhead.
- All the controls required for the equipment located in the recess shall be activated from the deck.
- It shall be possible to drain the recess using a system installed on deck in the cargo area and independent of any other system.
- The recess shall be provided with a level alarm device which activates the draining system and triggers a visual and audible alarm in the wheelhouse when liquid accumulates at the bottom.
- When the recess is located above the cofferdam, the engine room bulkhead shall have an ‘A-60’ fire protection insulation (see Pt C, Ch 4, Sec 1, [2.2]).
- When the cargo area is fitted with a water-spray system, electrical equipment located in the recess shall be protected against infiltration of water.
- Pipes connecting the recess to the hull shall not pass through the cargo tanks.

3.2.6 If the list of substances on the vessel according to Ch 3, Sec 1, [4.3.2] is going to include substances that require explosion protection in accordance with column (17) of Ch 3, App 3, Tab 2, and the recess is deeper than 0,50 m, then

it shall be provided with a permanent gas detection system which automatically indicates the presence of flammable gases by means of direct-measuring sensors and actuates a visual and audible alarm when the gas concentration has reached 20 % of the lower explosive limit (LEL) of the cargo or 20 % of the lower explosive limit (LEL) of n-Hexane, whichever is the more critical value. The sensors of this system shall be placed at suitable positions at the bottom of the recess. Measurement shall be continuous and displayed near to the entrance.

Visual and audible alarms shall be installed in the wheelhouse and on deck and, when the alarm is actuated, the vessel loading and unloading system shall be shut down. Failure of the gas detection system shall be immediately signalled in the wheelhouse and on deck by means of visual and audible alarms.

The alarm shall be automatically relayed to the accommodation if it has not been switched off.

3.2.7 For double hull construction with the cargo tanks integrated in the vessel's structure, the distance between the side wall and the inner side wall of the vessel shall be not less than 1,00 m.

3.2.8 The mean depth of the double bottoms shall be not less than 0,70 m. It shall, however, never be less than 0,60 m.

3.2.9 The depth of the double bottom below the suction wells may be reduced to 0,50 m.

3.2.10 When a vessel is built with cargo tanks located in the hold space or refrigerated cargo tanks, the distance between the double walls of the hold space shall not be less than 0,80 m and the depth of the double bottom shall not be less than 0,60 m.

3.3 Cargo tank arrangements

3.3.1 The cargo tank is to comply with the following:

- for vessels with a length not more than 50,00 m, the length of a cargo tank shall not exceed 10,00 m
- for vessels with a length of more than 50,00 m, the length of a cargo tank shall not exceed 0,20 L, where L is the vessel rule length. This provision does not apply to vessels with independent built-in cylindrical tanks having a length to diameter ratio ≤ 7.

3.3.2 The capacity of a suction well shall be limited to not more than 0,10 m^3.

3.4 Integrated tank scantlings

3.4.1 The scantlings of the integrated tank structure are to be determined in compliance with Ch 1, Sec 3, [6].

3.5 Independent cargo tank scantlings

3.5.1 Tank scantlings

The scantlings of the independent tank structure are to be determined in compliance with Ch 1, Sec 3, [6.1.2].

When the vessel is provided with pressure cargo tanks, these tanks shall be designed in compliance with Pt C, Ch 1, Sec 3, for a working pressure of 400 kPa.

3.5.2 Supports and fastenings

The cargo tanks independent of the vessel's hull shall be fixed so that they cannot float.

The scantlings of the tank supports and fastenings are to be in compliance with Ch 1, Sec 3, [9].

3.6 Cargo tank openings

3.6.1

a) Cargo tank openings shall be located on deck in the cargo area.

b) Cargo tank openings with a cross-section of more than 0,10 m^2 and openings of safety devices for preventing overpressures shall be located not less than 0,50 m above deck.

3.6.2 Cargo tank openings shall be fitted with gastight closures capable of withstanding the test pressure in accordance with Pt B, Ch 3, Sec 4, [5].

3.6.3 Closures which are normally used during loading or unloading operations shall not cause sparking when operated.

3.6.4 Safety devices

a) Each cargo tank or group of cargo tanks connected to a common venting pipe shall be fitted with:
   - a connection for the safe return ashore of gases expelled during loading
   - a safe depressurization device for the cargo tanks, on which the position of the shut-off valve indicates clearly whether it is open or shut
   - safety devices for preventing unacceptable overpressures or vacuums.

   The opening pressure of the safety valves shall be permanently marked on the valves.

   The setting of the pressure relief valves shall be such that during the transport operation they do not blow off until the maximum permissible working pressure of the cargo tanks is reached.

   The gases shall be discharged upwards.

   The outlets of the pressure relief valves shall be located not less than 1.00 m above the deck and at a distance of not less than 6.00 m from the openings of accommodation, the wheelhouse and the service spaces outside the cargo area. No equipment shall be present in a circle of 1.00 m radius around the outlet of the pressure relief valve outlets. This area shall be marked as a danger zone.

b) If the list of substances on the vessel according to Ch 3, Sec 1, [4.3.2] is going to include substances that require explosion protection in accordance with column (17) of Ch 3, App 3, Tab 2:
   - At the connection to each cargo tank, the venting piping and the vacuum valve shall be equipped with a flame arrester capable of withstanding a detonation, and
   - the device for the self depressurisation of cargo tanks shall be deflagration safe and capable of withstanding steady burning;

c) If the list of substances on the vessel according to Ch 3, Sec 1, [4.3.2] is going to include substances that require explosion protection in accordance with column (17) of Ch 3, App 3, Tab 2, or for which there is a T in column (3b) of Ch 3, App 3, Tab 2, then the pressure relief valve shall be designed as a high velocity vent valve;

d) If a shut-off device is to be mounted between the venting piping and the cargo tank, it shall be placed between the cargo tank and the flame arrester, and each cargo tank shall be equipped with pressure relief valves;

e) The autonomous protection systems mentioned in (b) and (c) shall be chosen according to the explosion groups/subgroups of the substances listed in the list of substances on the vessel (see column (16) of Ch 3, App 3, Tab 2). The outlets of the high-velocity vent valves shall be located not less than 2.00 m above the deck and at a distance of not less than 6.00 m from the openings of the accommodations, the wheelhouse and the service spaces outside the cargo area. This height may be reduced to 1.00 m when there is no drive unit within a radius of 1.00 m around the pressure relief valve outlet. This area shall be marked as a danger zone;

   If the high velocity vent valve, the vacuum valve, the flame arresters and the venting piping are required to be heatable, the devices concerned shall be suitable for the relevant temperature.

3.6.5 Venting piping

a) When two or more cargo tanks are connected to common venting piping, it is sufficient that the equipment according to [3.6.4] (safety valves to prevent unacceptable overpressures and vacuums, high velocity vent valve, vacuum valve protected against deflagrations, safe pressure relief device for cargo tanks protected against deflagrations) is installed on the joint venting piping.

b) When each cargo tank is connected to its own venting piping, each cargo tank or the associated venting piping shall be equipped according to [3.6.4].

4 Cargo piping system

4.1 General

4.1.1 Pumps, compressors and accessory loading and unloading piping shall be placed in an area between the fore vertical plane and the aft vertical plane bounding the part of the cargo area below deck. Cargo pumps and compressors shall be capable of being shut down from this area and, in addition, from a position outside this area. Cargo pumps and compressors situated on deck shall be located not less than 6,00 m from entrances to, or openings of, the accommodation and service spaces outside any hazardous area comparable to zone 0 or 1.

4.2 Arrangement of cargo piping

4.2.1 Piping for loading and unloading shall be independent of any other piping of the vessel. No cargo piping shall be located below deck, except for those inside the cargo tanks and inside the cargo pump room.

4.2.2 The piping for loading and unloading shall be arranged so that, after loading or unloading operations, the liquid remaining in these pipes may be safely removed and may flow either into the vessel's tanks or the tanks ashore.

4.2.3 Piping for loading and unloading shall be clearly distinguishable from other piping, e.g. by means of colour marking.

4.2.4 The piping for loading and unloading located on deck, with the exception of the shore connections shall be located not less than B/4 from the outer shell.

4.2.5 The shore connections shall be located not less than 6,00 m from the entrances to or openings of, the accommodation and service spaces outside any hazardous area comparable to zone 0 or 1.

4.2.6 Each shore connection of the venting pipe and shore connections of the piping for loading and unloading, through which the loading or unloading operation is carried out, shall be fitted with a shut-off device. However, each shore connection shall be fitted with a blind flange when it is not in operation.

4.2.7 The flanges and stuffing boxes shall be provided with a spray protection device.

4.2.8 Piping for loading and unloading, and venting pipes, shall not have flexible connections fitted with sliding seals.

4.2.9 The piping for loading shall extend down to the bottom of the tank.

4.2.10 If the vessel is carrying several dangerous substances liable to react dangerously with each other, a separate pump with its own piping for loading and unloading shall be installed for each substance. The piping shall not pass through a cargo tank containing dangerous substances with which the substance in question is liable to react.

4.3 Control, monitoring and alarm devices

4.3.1 Stop valves

The stop valves or other shut-off devices of the pipes for loading and unloading shall indicate whether they are open or shut.

4.3.2 Pressure gauges

The piping for loading and unloading shall be fitted with pressure gauges at the outlet of the pumps.

The permissible maximum overpressure or vacuum value shall be indicated on each measuring device.

4.4 Bonding

4.4.1 Every component of the pipes for loading and unloading shall be electrically connected to the hull.

4.5 Supply of cargo tanks with washing or ballast water

4.5.1 When pipes for loading and unloading are used for supplying the cargo tanks with washing or ballast water, the suctions of these pipes shall be located within the cargo area but outside the cargo tanks.

Pumps for tank washing systems with associated connections may be located outside the cargo area, provided the discharge side of the system is arranged in such a way that suction is not possible through that part.

A spring-loaded non-return valve shall be provided to prevent any gases from being expelled from the cargo area through the tank washing system.

4.5.2 A non-return valve shall be fitted at the junction between the water suction pipe and the cargo loading pipe.

4.6 Permissible loading and unloading flows

4.6.1 The permissible loading and unloading flows shall be calculated.

4.6.2 Calculations concern the permissible maximum loading and unloading flow for each cargo tank or each group of cargo tanks, taking into account the design of the ventilation system. These calculations shall take into consideration the fact that in the event of an unforeseen cut-off of the gas return piping or the compensation piping of the shore facility, the safety devices of the cargo tanks will prevent pressure in the cargo tanks from exceeding the following values:

- over-pressure: 1.15 times the opening pressure of the pressure relief valve/high velocity vent valve;
- vacuum pressure: not more than the design pressure, but not exceeding a vacuum of 5 kPa (0,05 bar).

5 Cargo pressure and temperature control

5.1 Regulation of cargo pressure and temperature

5.1.1 Unless the entire cargo system is designed to resist the full effective vapour pressure of the cargo at the upper limits of the ambient design temperatures, the pressure of the tanks shall be kept below the permissible maximum set pressure of the safety valves, by one or more of the following means:

- a system for the regulation of cargo tank pressure using mechanical refrigeration
- a system ensuring safety in the event of the heating or increase in pressure of the cargo. The insulation or the design pressure of the cargo tank, or the combination of these two elements, shall be such as to leave an adequate margin for the operating period and the temperatures expected; in each case the system shall be deemed acceptable by the Society and shall ensure safety for a minimum time of three times the operation period
- other systems deemed acceptable by the Society.

5.1.2 The systems prescribed in [5.1.1] shall be constructed, installed and tested to the satisfaction of the Society. The materials used in their construction shall be compatible with the cargoes to be carried. For normal service, the upper ambient design temperature limits shall be:

- air: +30°C
- water: +20°C

5.2 Refrigeration system

5.2.1 The refrigeration system referred to in [5.1.1] shall be composed of one or more units capable of keeping the pressure and temperature of the cargo at the upper limits of the ambient design temperatures at the prescribed level. Unless another means of regulating cargo pressure and temperature deemed satisfactory by the Society is provided, provision shall be made for one or more stand-by units with an output at least equal to that of the largest prescribed unit. Provision shall be made for a stand-by heat-exchanger unless the system's normal heat-exchanger has a surplus capacity equal to at least 25% of the largest prescribed capacity.

Cargo tanks, piping and accessories shall be insulated so that, in the event of a failure of all cargo refrigeration systems, the entire cargo remains for at least 52 hours in a condition not causing the safety valves to open.

5.2.2 When several refrigerated cargoes with a potentially dangerous chemical reaction are carried simultaneously, particular care shall be given to the refrigeration systems so as to prevent any mixing of the cargoes. For the carriage of such cargoes, separate refrigeration systems, each including the full stand-by unit referred to in [5.2.1], shall be provided for each cargo.

5.2.3 When several refrigerated cargoes are not soluble in each other under conditions of carriage such that their vapour pressures are added together in the event of mixing, particular care shall be given to the refrigeration systems to prevent any mixing of the cargoes.

5.2.4 All primary and secondary coolant fluids shall be compatible with each other and with the cargo with which they may come into contact.

5.2.5 When the refrigeration system is installed in a separate service space, this service space shall meet the requirements of [2.3.6].

5.3 Cargo tank heating

5.3.1 Cargo tank heating system is to be installed as a separate system, equipped with a heat exchanger located in the cargo area. Where special heat transfer media are used this requirement may be dispensed with upon approval by the Society.

5.3.2 Boilers which are used for heating the cargo shall be fuelled with a liquid fuel having a flashpoint of more than 55°C. They shall be placed either in the engine room or in another separate space below deck and outside the cargo area, which is accessible from the deck or from the engine room.

5.3.3 The cargo heating system shall be designed so that the cargo cannot penetrate into the boiler in the case of a leak in the heating coils. A cargo heating system with artificial draught shall be ignited electrically.

5.3.4 The ventilation system of the engine room shall be designed taking into account the air required for the boiler.

5.3.5 Where the cargo heating system is used during loading, unloading or gas-freeing, the service space which contains this system shall fully comply with [8.1.1]. This requirement does not apply to the inlets of the ventilation system. These inlets shall be located at a minimum distance of 2,00 m from any hazardous area comparable to zone 0 or 1 and 6,00 m from the openings of cargo tanks or residual cargo tanks, loading pumps situated on deck, openings of high velocity vent valves, pressure relief devices and shore connections of loading and unloading pipes and must be located not less than 2,00 m above the deck.

The requirements of [8.1.1] are not applicable to the unloading of substances having a flash point of 60 °C or more when the temperature of the product is at least 15 K lower at the flash point.

5.4 Water spray system

5.4.1 When water spraying is required in column (9) of Ch 3, App 3, Tab 2, a water spray system shall be installed in the cargo area on deck to enable gas emissions from loading to be precipitated or to cool the tops of cargo tanks by spraying water over the whole surface so as to avoid safely the activation f the pressure relief valves/high velocity vent valves at 50 kPa.

5.4.2 The gas precipitation system shall be fitted with a connection device for supply from a shore installation.

5.4.3 The spray nozzles shall be so installed that the entire cargo deck area is covered and the gases released are precipitated safely.

5.4.4 The system shall be capable of being put into operation from the wheelhouse and from the deck. Its capacity shall be such that when all the spray nozzles are in operation, the outflow is not less than 50 litres per square metre of deck area and per hour.

6 Residual cargo tanks and receptacles for residual products

6.1 General

6.1.1 When vessels are provided with tanks for residual products or receptacles for residual products, they shall be located in the cargo area and comply with the provisions of [6.1.2] and [6.1.3]. Receptacles for residual products shall be located only in the cargo area on deck and not less than a quarter of the vessel's breadth from the outer shell.

6.1.2 Tanks for residual products shall be equipped with:

- a level gauge
- connections, with stop valves, for pipes and hose assemblies;
- a pressure relief/vacuum valve;

  The pressure relief valve shall be sized so that, during the transport operation, it does not open when in normal operation. This condition is met when the opening pressure of the valve meets the conditions required in column (10) of Ch 3, App 3, Tab 2 for the substances to be carried.

  If the list of substances on the vessel according to Ch 3, Sec 1, [4.3.2] is going to include substances that require explosion protection in accordance with column (17) of Ch 3, App 3, Tab 2, then the vacuum valve shall be designed so as to be capable of withstanding a deflagration. The deflagration safety may also be ensured by a flame arrester.

  If the list of substances on the vessel according to Ch 3, Sec 1, [4.3.2]is going to include substances that require explosion protection in accordance with column (17) of Ch 3, App 3, Tab 2, or for which there is a T in column (3b) of Ch 3, App 3, Tab 2, then the pressure relief valve shall be designed as a high velocity vent valve.

  The high velocity vent valve and the deflagration safe vacuum valve shall be chosen according to the explosion groups/subgroups of the substances listed in the list of substances on the vessel (see column (16) of Ch 3, App 3, Tab 2).

The maximum permissible capacity is 30 m^3.

6.1.3 The receptacles for residual products shall be equipped with:

- a possibility of indicating the degree of filling
- connections, with stop valves, for pipes and hose assemblies;
- A connection enabling gases released during filling to be evacuated safely.

7 Environmental control

7.1 Inerting facility

7.1.1 In cases in which inerting or blanketing of the cargo is prescribed, the vessel shall be equipped with an inerting system.

7.1.2 This system shall be capable of maintaining a permanent minimum pressure of 7 kPa (0,070 bar) in the spaces to be inerted. In addition, the inerting system shall not increase the pressure in the cargo tank to a pressure greater than that at which the pressure valve is regulated. The set pressure of the vacuum-relief valve shall be 3,5 kPa (0,035 bar).

7.1.3 The premises to be inerted shall be equipped with connections for introducing the inert gas and monitoring systems so as to ensure the correct atmosphere on a permanent basis.

8 Electrical installations

8.1 Type and location of electrical installations and equipment

8.1.1 Electrical installations and equipment shall be of at least the "limited explosion risk" type.

This provision does not apply to:

a) Lighting installations in the accommodation and the wheelhouse, except for switches near to the entrances

b) Mobile phones, fixed telephone installations, stationary and portable computers and loading instruments in the accommodation or the wheelhouse

c) Electrical installations and equipment which, during a stay in the immediate vicinity of or within a shoreside assigned zone:

   1) are extinguished; or

   2) are placed in premises equipped with a ventilation system according to [2.5]

d) Radiotelephone installations and inland AIS (automatic identification systems) stations in the accommodation and the wheelhouse, if no part of an aerial for radiotelephone installations or AIS stations is situated above or within 2.00 m of the cargo area.

8.1.2 In the cofferdams, double-hull spaces, double bottoms and hold spaces, only hermetically sealed echo sounding devices are allowed, the cables of which are led through thick-walled steel tubes with gastight connections up to the main deck.

8.1.3 The fixed electrical installations and equipment which do not meet the requirements set out in [8.1.1] and their switches shall be marked in red. The disconnection of such equipment shall be controlled from a centralized location on board.

8.1.4 Every insulated distribution network shall be fitted with an automatic device with a visual and audible alarm for checking the insulation level.

8.1.5 Only distribution systems without return connection to the hull are permitted. This provision does not apply to:

- Active cathodic corrosion protection
- Certain limited sections of the installations situated outside the cargo area (e.g., connections of starters of diesel engines)
- The device for checking the insulation level referred to in [8.1.4].

8.1.6 An electric generator which is permanently driven by an engine and which does not meet the requirements of [8.1.1], shall be fitted with a switch capable of shutting down the generator. A notice board with the operating instructions shall be displayed near the switch.

8.1.7 Failure of the power supply for the safety and control equipment shall be immediately indicated by visual and audible signals in the wheelhouse and on the deck. The alarm must be relayed to the accommodation automatically if it has not been switched off.

8.1.8 Electrical switches, sockets and cables on deck shall be protected against mechanical damage.

8.1.9 Sockets for the connection of signal lights and gangway lighting shall be solidly fitted to the vessel close to the signal mast or the gangway. The sockets used in this area shall be designed so as to prevent connection or disconnection except when they are not live.

8.2 Type and location of electrical and non-electrical installations and equipment intended to be used in explosion hazardous areas

8.2.1 On board vessels covered by the classification of zones as defined in Ch 3, App 1, Tab 1, electrical and non-electrical installations and equipment used in explosion hazardous areas shall meet at least the requirements for use in the area concerned.

They shall be selected on the basis of the explosion groups/subgroups and temperature classes to which the substances to be carried belong (see columns (15) and (16) of Ch 3, App 3, Tab 2).

If the list of substances on the vessel according to Ch 3, Sec 1, [4.3.2] is going to include substances for which temperature classes T4, T5 or T6 are indicated in column (15) of Ch 3, App 3, Tab 2, then the corresponding surface temperatures within the assigned zones shall not exceed 135°C (T4), 100° (T5) or 85°C (T6).

If the list of substances on the vessel according to Ch 3, Sec 1, [4.3.2] is going to include substances for which temperature classes T1 or T2 are indicated in column (15) of Ch 3, App 3, Tab 2, then the corresponding surface temperatures within the assigned zones shall not exceed 200°C.

8.2.2 Except in the case of optical fibres, electrical cables shall be armoured or placed in a metallic sheath or in protective tubes.

Electrical cables for the active cathodic protection of the shell plating shall be led through thick-walled steel tubes with gastight connections up to the main deck.

8.2.3 Movable electric cables are prohibited in the explosion danger area, except for electric cables for intrinsically safe electric circuits or for connecting:

- Signal lights and lighting for gangways, provided the connection point (for example, the socket) is permanently fitted to the vessel close to the signal mast or gangway
- The power network on a vessel to a land-based power network; provided
  - The electric cables and the power supply unit conform with a valid standard
  - The power supply unit and connectors are located outside of the explosion danger area.

Connecting and disconnecting sockets/connectors shall only be possible when they are not live.

8.2.4 Electrical cables of intrinsically safe circuits shall be separated from other cables not intended for use in such circuits and shall be marked (they shall not be installed together in the same string of cables and they shall not be fixed by the same cable clamps).

8.2.5 For movable electrical cables permitted under, only sheathed cables of type H07RN-F in accordance with standard IEC 60245-4:2011 or electrical cables of at least equivalent design having conductors with a cross-section of not less than 1.50 mm^2 shall be used.

8.3 Earthing

8.3.1 The metal parts of electrical appliances in the cargo area which are not live as well as protective metal tubes or metal sheaths of cables in normal service shall be earthed, unless they are so arranged that they are automatically earthed by bonding to the metal structure of the vessel.

8.3.2 The provisions of [8.3.1] apply also to equipment having service voltages of less than 50 V.

8.3.3 Independent cargo tanks, metal intermediate bulk containers and tank-containers shall be earthed.

8.3.4 Receptacles for residual products shall be capable of being earthed.

8.4 Storage batteries

8.4.1 Storage batteries shall be located outside any hazardous area comparable to zone 0 or 1.

9 Fire protection and fire extinction

9.1 Fire and naked light

9.1.1 The outlets of funnels shall be located not less than 2,00 m from any hazardous area comparable to zone 0 or 1. Arrangements shall be provided to prevent the escape of sparks and the entry of water.

9.1.2 Heating, cooking and refrigerating appliances shall not be fuelled with liquid fuels, liquid gas or solid fuels.

The installation in the engine room or in another separate space of heating appliances fuelled with liquid fuel having a flash-point above 55 °C is, however, permitted.

Cooking and refrigerating appliances are permitted only in the accommodation.

9.1.3 Only electrical lamps are permitted.

9.2 Fire extinguishing arrangements

9.2.1 In addition to the requirements of Part C, Chapter 4, the fire extinguishing arrangements in [9.3] to [9.5] are to be complied with.

9.3 Portable fire extinguishers

9.3.1 In addition to the fire-extinguishing appliances prescribed in Pt C, Ch 4, Sec 4, [2] each vessel shall be equipped with at least two additional portable fire-extinguishers having the same capacity in cargo area.

These additional portable fire-extinguishers shall be suitable for fighting fires involving the dangerous goods carried.

9.4 Fire extinguishing system

9.4.1 A fire extinguishing system complying with the following requirements shall be installed on the vessel:

- It shall be supplied by two independent fire or ballast pumps, one of which shall be ready for use at any time. These pumps and their means of propulsion and electrical equipment shall not be installed in the same space.
- It shall be provided with a water main fitted with at least three hydrants in the cargo area above deck. Three suitable and sufficiently long hoses with spray nozzles having a diameter of not less than 12 mm shall be provided.
- It shall be possible to reach any point of the deck in the cargo area simultaneously with at least two jets of water not supplied from the same hydrant.

  A spring-loaded non-return valve shall be fitted to ensure that no gases can escape through the fire extinguishing system into the accommodation or service spaces outside the cargo area.
- The capacity of the system shall be at least sufficient for a jet of water to have a minimum reach of not less than the vessel's breadth from any location on board with two spray nozzles being used at the same time.

9.5 Fixed fire extinguishing system

9.5.1 In addition the machinery spaces and the cargo pump room shall be provided with a permanently fixed fire extinguishing system, in compliance with Pt C, Ch 4, Sec 4, [4].

10 Safety and control installations

10.1 General

10.1.1 Cargo tanks shall be provided with the following equipment:

a) a level gauge

b) a level alarm device which is activated at the latest when a degree of filling of 90% is reached

c) a high level sensor for actuating the facility against overflowing at the latest when a degree of filling of 97,5% is reached

d) an instrument for measuring the pressure of the vapour phase inside the cargo tank

e) an instrument for measuring the temperature of the cargo, if in column (9) of Ch 3, App 3, Tab 2, a cargo heating installation or a possibility of heating the cargo is required on board, or if a maximum temperature is indicated in column (20) of Ch 3, App 3, Tab 2

f) A connection for a closed-type or partly closed-type sampling device, and/or at least one sampling opening as required in column (13) of Ch 3, App 3, Tab 2. The connection shall be fitted with a shut-off device resistant to the internal pressure at the connection.

If the list of substances on the vessel according to Ch 3, Sec 1, [4.3.2] is going to include substances that require explosion protection in accordance with column (17) of Ch 3, App 3, Tab 2, then the flame arrester plate stack capable of withstanding steady burning of the sampling opening shall be selected according to the explosion groups/subgroups of the substances foreseen for inclusion in the list of substances on the vessel (see column (16) of Ch 3, App 3, Tab 2).

10.2 Cargo tank level indicators

10.2.1 Each cargo tank is to be equipped with a closed gauging device approved by the Society.

The level gauge shall allow readings from the control position of the shut-off devices of the particular cargo tank. The permissible maximum filling level of the cargo tank shall be marked on each level gauge.

10.3 Level alarm device

10.3.1 Cargo tank shall be provided with a level alarm device which is activated at the latest when a degree of filling of 90% is reached.

The level alarm device shall give a visual and audible warning on board when actuated. The level alarm device shall be independent of the level gauge.

10.4 High level sensor

10.4.1 Cargo tank shall be provided with a high level sensor for actuating the facility against overflowing at the latest when a degree of filling of 97,5% is reached.

10.5 Cargo tank pressure monitoring

10.5.1 When the pressure or temperature exceeds a set value, instruments for measuring the vacuum or overpressure of the gaseous phase in the cargo tank or the temperature of the cargo shall activate a visual and audible alarm in the wheelhouse and on deck. The alarm must be relayed to the accommodation automatically if it has not been switched off.

10.5.2 When the pressure exceeds the set value during loading and unloading, the instrument for measuring the pressure shall initiate immediately an electrical contact which shall put into effect measures to interrupt the loading or unloading operation. If the vessel's own discharge pump is used, it shall be switched off automatically.

10.5.3 The instrument for measuring the overpressure or vacuum shall activate the alarm at latest when:

a) An overpressure equal to 1,15 times the opening pressure of the pressure relief valves/high velocity vent valves is reached; or

b) The lower threshold of the design pressure of the vacuum valves, but not exceeding a vacuum of 5 kPa (0,05 bar), is reached.

10.5.4 The maximum permissible temperature is indicated in column (20) of Ch 3, App 3, Tab 2. The sensors for the alarms mentioned in this paragraph may be connected to the alarm device of the sensor.

When it is prescribed in column (20) of Ch 3, App 3, Tab 2, the instrument for measuring the overpressure of the gaseous phase in the cargo tank shall actuate a visible and audible alarm in the wheelhouse when the overpressure exceeds 40 kPa (0,4 bar) during the voyage. The alarm must be relayed to the accommodation automatically if it has not been switched off. It shall be possible to read the gauges in direct proximity to the control for the water spray system.

10.6 Cargo temperature monitoring

10.6.1 An instrument for measuring the temperature of the cargo shall be provided, if in column (9) of Ch 3, App 3, Tab 2 a heating installation is required, or if a possibility of heating the cargo is required, if a maximum temperature is indicated in column (20) of that list.

10.7 Cargo tank sampling equipment

10.7.1 Each cargo tank shall be equipped with a connection for a sampling device, closed or partially closed, and/or at least one sampling opening as required in column (13) of Ch 3, App 3, Tab 2.

11 Buoyancy and stability

11.1 General

11.1.1 General requirements of Pt B, Ch 2, Sec 2, [1] to Pt B, Ch 2, Sec 2, [3] are to be complied with.

11.1.2 The longitudinal centre bulkhead may be dispensed with only if sufficient stability is guaranteed.

11.1.3 Proof of sufficient stability shall be furnished including stability in damaged condition.

11.1.4 The basic values for the stability calculation (the vessel's lightweight and location of the centre of gravity) shall be determined in compliance with Pt B, Ch 2, Sec 2, [2.2].

11.1.5 Proof of sufficient intact stability shall be furnished for all stages of loading and unloading and for the final loading condition for all the relative densities of the substances transported contained in the vessel substance list according to Ch 3, Sec 1, [4.3.2].

11.1.6 For every loading case, taking account of the actual fillings and floating position of cargo tanks, ballast tanks and compartments, drinking water and sewage tanks and tanks containing products for the operation of the vessel, the vessel shall comply with the intact and damage stability requirements.

Intermediate stages during operations shall also be taken into consideration.

11.2 Intact stability

11.2.1 The requirements for intact stability resulting from the damage stability calculation shall be fully complied with.

11.2.2 For vessels with cargo tanks of more than 0,70 B in width, the following intact stability requirements are to be complied with, bearing in mind the influence of all free surfaces in tanks for all stages of loading and unloading:

- in the positive area of the righting lever curve up to immersion of the first unprotected opening there shall be a righting lever (GZ) of not less than 0,10 m
- the surface of the positive area of the righting lever curve up to immersion of the first unprotected opening and in any event up to an angle of heel ≤ 27° shall not be less than 0,024 m.rad
- the metacentric height GM shall be not less than 0,10 m.

11.2.3 The most stringent requirement of [11.2.1] and [11.2.2] is applicable to the vessel.

11.3 Damage stability

11.3.1 The following assumptions shall be taken into consideration for the damaged condition:

a) Extent of side damage:
   - longitudinal extent: at least 0,10 L_{OA} but not less than 5,00 m
   - transverse extent: B_2 – 0,01 m
   - vertical extent: from base line upwards without limit.

b) Extent of bottom damage:
   - longitudinal extent: at least 0,10 L_{OA} but not less than 5,00 m
   - transverse extent: 3,00 m
   - vertical extent: from base line to D_2 – 0,01 m upwards, except for pump well.

c) Any bulkhead within the damaged area shall be assumed damaged, which means that the location of bulkheads shall be chosen to ensure that the vessel remains afloat after the flooding of two or more adjacent compartments in the longitudinal direction.

   The following provisions are applicable:
   - for bottom damage, adjacent athwartship compartments shall also be assumed flooded
   - the lower edge of any non-watertight opening (e.g. windows, doors and access hatchways) shall, at the final stage of flooding, be not less than 0,10 m above the damage waterline.

11.3.2 In general, permeability shall be assumed to be 95%. Where an average permeability of less than 95% is calculated for any compartment, this calculated value obtained may be used.

However, the minimum values of permeability μ given in Tab 2 are to be used.

For the main engine room, only the one-compartment standard need be taken into account, i.e. the end bulkheads of the engine room shall be assumed as not damaged.

Table 2 : Permeability μ

Spaces	μ, in %
Engine rooms	85
Accommodation spaces	95
Double bottoms, oil fuel tanks, ballast tanks, etc., depending on whether, according to their function, they have to be assumed as full or empty for the vessel floating at the maximum permissible draught	0 or 95

11.3.3 The damage stability is generally regarded sufficient if (see Fig 1):

- At the stage of equilibrium (in the final stage of flooding), the angle of heel is not greater than 12°.

  Non-watertight openings shall not be flooded before reaching the stage of equilibrium. If such openings are immersed before that stage, the corresponding spaces shall be considered flooded for the purpose of stability calculation.

- The positive range of the righting lever curve beyond the stage of equilibrium has a righting lever of ≥ 0,05 m in association with an area under the curve of ≥ 0,0065 m.rad. The minimum values of stability shall be satisfied up to immersion of the first unprotected (non-weathertight) opening and in any event up to an angle of heel ≤ 27°. If non-weathertight openings are immersed before that stage, the corresponding spaces shall be considered flooded for the purpose of stability calculation.

11.3.4 If openings through which undamaged compartments may additionally become flooded are capable of being closed watertight, the closing appliances shall be marked accordingly.

11.3.5 Where cross- or down-flooding openings are provided for reduction of unsymmetrical flooding, the time of equalisation shall not exceed 15 minutes, provided during the intermediate stages of flooding sufficient stability has been proved.

Figure 1 : Proof of damage stability

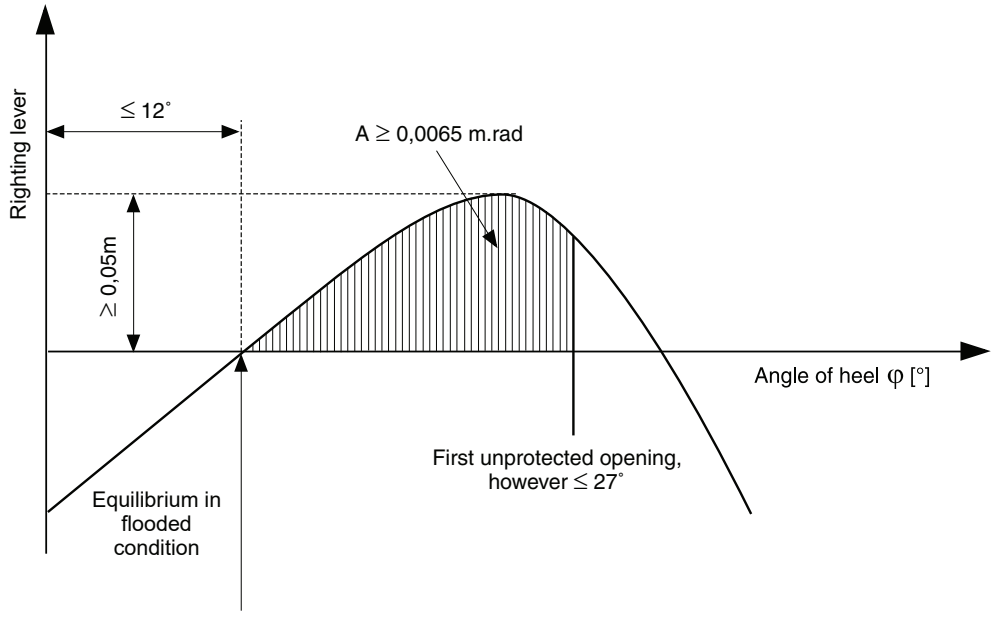

SECTION 4 DG-N

Symbols

L_{OA} : Length overall, in m, defined in Pt B, Ch 1, Sec 2, [2.5]

B : Breadth, in m, defined in Pt B, Ch 1, Sec 2, [2.2]

B_2 : Breadth of the side tank, in m

D_2 : Height of the double bottom, in m.

1 General

1.1 Application

1.1.1 Vessels complying with the requirements of this Section are eligible for the assignment of one of the following additional service features:

- **DG-N closed** as defined in Pt A, Ch 1, Sec 3, [3.2.15]
- **DG-N open with flame arresters** as defined in Pt A, Ch 1, Sec 3, [3.2.16]
- **DG-N open** as defined in Pt A, Ch 1, Sec 3, [3.2.17].

1.1.2 These Rules apply in addition to Ch 1, Sec 3 and Ch 3, Sec 1.

1.2 Documents to be submitted

1.2.1 Tab 1 lists the plans and documents to be submitted in addition to the documents required in the other Parts of the Rules for the parts of the vessel not affected by the cargo, as applicable.

2 Vessel arrangement

2.1 Protection against the penetration of gases

2.1.1 The vessel shall be designed so as to prevent dangerous gases and liquids from penetrating into the accommodation, wheelhouse and the service spaces. None of the windows in these spaces shall be capable of being opened unless its intended use is as an emergency exit and it is marked as such.

2.1.2 DG-N open vessels are only required to meet the requirement [2.1.1] if the vessel remains in the immediate vicinity of or within a shoreside assigned zone.

2.2 Protection against the penetration of gases - Additional requirements for DG-N closed and DG-N open with flame arresters

2.2.1 Liquid-tight protective coamings shall be fitted on deck at the height of the external bulkheads of the cargo tanks, at a maximum distance of 0,60 m from the outer cofferdam bulkheads or the hold end bulkheads. The protective coamings shall either extend over the entire width of the vessel or be fixed between the longitudinal spill coamings so as to prevent liquids from entering the forepeak and afterpeak. The height of the protective coamings and the spill coamings shall be at least 0,075 m. The protective coaming may correspond to the protection wall prescribed in [2.4.1] if the protection wall extends across the entire width of the vessel.

2.2.2 If the list of substances on the vessel according to Ch 3, Sec 1, [4.3.2] is going to include substances that require explosion protection in accordance with column (17) of Ch 3, App 3, Tab 2, then the use of installations and equipment that are not of at least the "limited explosion risk" type is not permitted during loading and unloading operations in parts of the deck outside the cargo area, unless those parts are protected against the penetration of gases and liquids by a gas- and liquid-tight protection wall. The wall must either extend over the full width of the vessel or surround the areas to be protected in a U-shaped form. The wall must cover the whole width of the area to be protected and at least 1,00 m in the direction opposite to the cargo area (see Ch 3, App 1, Fig 1). The height of the wall shall be at least 1,00 m above the adjacent cargo deck area in the cargo area. The outer wall and side walls of the accommodation can be considered as a protection wall if they do not include openings and if the dimensions are complied with.

A protection wall is not required where the distance between the areas to be protected and the high velocity vent valve, the shore connections of the piping for loading and unloading, the compressor on deck and the opening of the closest pressure tanks is at least 12,00 m.

2.2.3 On deck, the lower edges of door-openings in the sidewalls of superstructures and the sills of hatches and ventilation openings of premises located under the deck shall have a height of not less than 0,50 m above the deck.

This requirement does not apply to access openings to double-hull spaces and double bottoms.

2.2.4 The bulwarks, foot-rails, etc., shall be provided with sufficiently large openings which are located directly above the deck.

2.3 Engine rooms

2.3.1 Internal combustion engines for the vessel's propulsion as well as internal combustion engines for auxiliary machinery shall be located outside the cargo area. Entrances and other openings of engine rooms shall be at a distance of not less than 2,00 m from any hazardous area comparable to zone 0 or 1.

Table 1 : Plans and documents to be submitted

No.	A/I	Document
1	I	List of substances intended to be carried with their UN number (see Ch 3, App 3, Tab 2), including all design characteristics of substances and other important design conditions
2	I	General arrangement plan, showing location of cargo tanks and fuel oil, ballast and other tanks, void spaces
3	A	Hazardous areas plan and location of the electrical equipment installed in these areas
4	A	Ventilation duct arrangement in gas-dangerous spaces and adjacent zones
5	A	Details of hull structure in way of cargo tanks, including support arrangement for tanks, saddles, anti-floating and anti-lifting devices, deck sealing arrangements, independent cargo tanks, etc.
6	A	Intact and damage stability calculations
7	A	Scantlings, material and arrangement of the cargo containment system
8	A	Details of cargo handling system, including arrangements and details of piping and fittings
9	A	Details of cargo pumps
10	A	Details of temperature and pressure control systems
11	A	Bilge and ballast system in cargo area
12	A	Gas freeing system in cargo tanks including inert gas system
13	A	Ventilation system in cargo area
14	A	List of the electrical equipment installed in hazardous areas comparable to zone 0 and 1, including the following equipment particulars: location, type of protection, type of protection against explosion, testing body and approval number
15	A	Schematic electrical wiring diagram
16	A	Pressure drop calculation note
17	A	Gas detection system
18	A	Cargo tank instrumentation
19	A	Details of fire-extinguishing appliances and systems in cargo area
20	A	Arrangement drawing of the various fire bulkheads and decks with standard fire test reports for the various arrangements, surface coverings, paints and similar
21	I	Loading and unloading operation description, including cargo tank filling limits, where applicable
22	A	Gas return system
23	A	List of equipment installed in hazardous areas comparable to zone 2 which may be used during loading, unloading and gas-freeing and red equipment
Note 1: A = to be submitted for review I = to be submitted for information.		

2.3.2 The engine rooms shall be accessible from the deck; the entrances shall not face the cargo area. When the doors are not located in a recess whose depth is at least equal to the door width, the hinges shall face the cargo area.

2.4 Accommodation and service spaces

2.4.1 Accommodation spaces and the wheelhouse shall be located outside the cargo area, see Ch 3, App 1, [1.7] for definition, forward of the fore vertical plane or abaft the aft vertical plane bounding the part of cargo area below deck. Windows of the wheelhouse which are located not less than 1,00 m above the bottom of the wheelhouse may tilt forward.

2.4.2 Entrances to spaces and openings of superstructures shall not face the cargo area. Doors opening outward and not located in a recess the depth of which is at least equal to the width of the doors shall have their hinges facing the cargo area.

2.4.3 Entrances from the deck and openings of spaces facing the weather shall be capable of being closed.

2.4.4 Entrances and windows of superstructures and accommodation spaces which can be opened as well as other openings of these spaces shall be located not less than 2,00 m from any hazardous area comparable to zone 0 or 1. No wheelhouse doors and windows shall be located within 2,00 m from any hazardous area comparable to zone 0 or 1, except where there is no direct connection between the wheelhouse and the accommodation.

2.4.5

a) Driving shafts of the bilge or ballast pumps in the cargo area may penetrate through the bulkhead between the service space and the engine room, provided the arrangement of the service space is in compliance with [2.6.6].

b) The penetration of the shaft through the bulkhead shall be gastight and shall have been approved by the Society.

c) Penetrations through the bulkhead between the engine room and the service space in the cargo area, and the bulkhead between the engine room and the hold spaces may be provided for electrical cables, hydraulic and piping for measuring, control and alarm systems, provided that the penetrations have been approved by the Society. The penetrations shall be gastight. Penetrations through a bulkhead with an "A-60" fire protection insulation (see Pt C, Ch 4, Sec 1, [2.2]), shall have an equivalent fire protection.

d) Pipes may penetrate the bulkhead between the engine room and the service space in the cargo area provided that these are pipes between the mechanical equipment in the engine room and the service space which do not have any openings within the service space and which are provided with shut-off devices at the bulkhead in the engine room.

e) Notwithstanding [2.6.4], pipes from the engine room may penetrate the service space in the cargo area or a cofferdam or a hold space or a double hull space to the outside provided that within the service space or cofferdam or hold space or doublehull space they are of the thick-walled type and have no flanges or openings.

2.4.6 A service space located within the cargo area below deck shall not be used as a cargo pump room for the loading and unloading system, except where the cargo pump room is provided with a permanent gas detection system which automatically indicates the presence of explosive gases or lack of oxygen by means of direct-measuring sensors and which actuates a visual and audible alarm when the gas concentration has reached 20% of the lower explosive limit. The sensors of this system shall be placed at suitable positions at the bottom and directly below the deck.

Measurement shall be continuous.

The audible and visual alarms are installed in the wheelhouse and in the cargo pump room and, when the alarm is actuated, the loading and unloading system is shut down. Failure of the gas detection system shall be immediately signalled in the wheelhouse and on deck by means of audible and visual alarms.

2.5 Accommodation and service spaces - Additional requirements for DG-N closed and DG-N open with flame arresters

2.5.1 Where a driving shaft of auxiliary machinery penetrates through a wall located above the deck the penetration shall be gastight.

2.5.2 A service space located within the cargo area below deck shall not be used as a cargo pump room for the loading and unloading system, except where:

- the cargo pump room is separated from the engine room or from service spaces outside the cargo area by a cofferdam or a bulkhead with an "A-60" fire protection insulation (see Pt C, Ch 4, Sec 1, [2.2]), or by a service space or a hold space
- the "A-60" bulkhead required above does not include penetrations referred to in [2.4.5], item a)
- ventilation exhaust outlets are located not less than 6,00 m from entrances and openings of the accommodation and service spaces outside the cargo area
- the access hatches and ventilation inlets can be closed from the outside
- all piping for loading and unloading as well as those of stripping systems are provided with shut-off devices at the pump suction side in the cargo pump room immediately at the bulkhead. The necessary operation of the control devices in the pump room, starting of pumps and necessary control of the liquid flow rate shall be effected from the deck
- the bilge of the cargo pump room is equipped with a gauging device for measuring the filling level which activates a visual and audible alarm in the wheelhouse when a liquid is accumulating in the cargo pump room bilge
- the ventilation system prescribed in [2.8] and [2.9] has a capacity of not less than 30 changes of air per hour based on the total volume of the service space.

2.6 Hold spaces

2.6.1 The cargo tanks shall be separated by cofferdams of at least 0,60 m in width from the accommodation, engine room and service spaces outside the cargo area below deck or, if there are no such accommodation, engine room and service spaces, from the vessel's ends. Where the cargo tanks are installed in a hold space, a space of not less than 0,50 m shall be provided between such tanks and the end bulkheads of the hold space. In this case an end bulkhead meeting at least the definition for Class "A-60" (see Pt C, Ch 4, Sec 1, [2.2]), shall be deemed equivalent to a cofferdam. For pressure cargo tanks, the 0,50 m distance may be reduced to 0,20 m.

2.6.2 Hold spaces, cofferdams and cargo tanks shall be capable of being inspected.

2.6.3 All spaces in the cargo area shall be capable of being ventilated. Means for checking their gas-free condition shall be provided.

2.6.4 The bulkheads bounding the cargo tanks, cofferdams and hold spaces shall be watertight. The cargo tanks and the bulkheads bounding the cargo area shall have no openings or penetrations below deck.

The bulkhead between the engine room and the cofferdam or service space in the cargo area or between the engine room and a hold space may be fitted with penetrations provided that they conform to the provisions of [2.4.5].

The bulkhead between the cargo tank and the cargo pumproom below deck may be fitted with penetrations provided that they conform to the provisions of [2.5.2]. The bulkheads between the cargo tanks may be fitted with penetrations provided that the loading and unloading pipes are fitted with shut-off devices in the cargo tank from which they come. The shut-off devices shall be operable from the deck.

These pipes shall be at least 0,60 m above the bottom.

2.6.5 Double hull spaces and double bottoms in the cargo area shall be arranged for being filled with ballast water only. Double bottoms may, however, be used as fuel oil tanks, provided they comply with [2.11].

2.6.6

a) A cofferdam, the centre part of a cofferdam or another space below deck in the cargo area may be arranged as a service space, provided the bulkheads bounding the service space extend vertically to the bottom. This service space shall only be accessible from the deck.

b) The service space shall be watertight with the exception of its access hatches and ventilation inlets.

2.6.7 Where service spaces are located in the cargo area under deck, they shall be arranged so as to be easily accessible and to permit persons wearing protective clothing and breathing apparatus to safely operate the service equipment contained therein. They shall be designed so as to allow injured or unconscious personnel to be removed from such spaces without difficulty, if necessary by means of fixed equipment.

2.6.8 Cofferdams, double-hull spaces, double bottoms, cargo tanks, hold spaces and other accessible spaces within the cargo area shall be arranged so that they may be completely inspected and cleaned in an appropriate manner. The dimensions of openings, except for those of double hull spaces and double bottoms which do not have a wall adjoining the cargo tanks, shall be in compliance with Pt B, Ch 2, Sec 1, [3.2.2].

2.7 Hold spaces - Additional requirements for DG-N closed and DG-N open with flame arresters

2.7.1 No piping for loading and unloading shall be fitted within the service space referred to in [2.6.6], item a).

Piping for loading and unloading may be fitted in the cargo pump-rooms below deck only when they conform to the provisions of [2.5.2].

2.8 Ventilation

2.8.1 Each hold space shall have two openings the dimensions and location of which shall be such as to permit effective ventilation of any part of the hold space. If there are no such openings, it shall be possible to fill the hold spaces with inert gas or dry air.

2.8.2 Double-hull spaces and double bottoms within the cargo area which are not arranged for being filled with ballast water, hold spaces and cofferdams, shall be provided with ventilation systems.

2.8.3 A service space located within the cargo area below deck shall be provided with a ventilation system. The capacity of the fans shall be sufficient to ensure 20 complete changes of air per hour based on the volume of the service space.

The ventilation exhaust ducts shall extend down to 50 mm above the bottom of the service space. The air shall be supplied through a duct at the top of the service space.

If the list of substances on the vessel according to Ch 3, Sec 1, [4.3.2] is going to include substances that require explosion protection in accordance with column (17) of Ch 3, App 3, Tab 2, then the air inlets shall be located not less than 2,00 m above the deck, at a distance of not less than 2,00 m from tank openings and 6,00 m from the outlets of safety valves.

The extension pipes which may be necessary may be of the hinged type.

On board DG-N open vessels, other suitable installations without ventilator fans shall be sufficient.

2.8.4 Ventilation of accommodation and service spaces shall be possible.

2.9 Ventilation - Additional requirements for DG-N closed and DG-N open with flame arresters

2.9.1 All ventilation inlets of accommodation, wheelhouse and service spaces leading to the open air outside the cargo area shall be fitted with devices permanently fixed according to Pt C, Ch 4, Sec 4, [4.2], enabling them to be closed rapidly. It shall be clear whether they are open or closed.

Such ventilation inlets shall be located not less than 2,00 m from the cargo area.

Ventilation inlets of service spaces in the cargo area may be located within that area.

2.9.2 The flame-arresters prescribed in [3.6.3] and [3.6.4] shall be of a type approved for this purpose by the Society.

2.10 Engines

2.10.1 Only internal combustion engines running on fuel having a flash point above 55°C are allowed. This provision does not apply to internal combustion engines which are part of propulsion and auxiliary systems fitted onboard vessels assigned one of the additional service features **Dualfuel** or **Gasfuel** according to Pt A, Ch 1, Sec 3, [1.3.5].

2.10.2 Ventilation inlets of the engine room and, when the engines do not take in air directly from the engine room, the air intakes of the engines shall be located not less than 2,00 m from any hazardous area comparable to zone 0 or 1.

2.11 Oil fuel tanks

2.11.1 When the vessel is provided with hold spaces, the double bottoms within these spaces may be arranged as oil fuel tanks, provided their depth is not less than 0,60 m.

Oil fuel pipes and openings of such tanks are not permitted in the hold space.

2.11.2 The open ends of the air pipes of all liquid oil fuel tanks shall extend to not less than 0,50 m above the open deck. Their open ends and the open ends of overflow pipes leading on the deck shall be fitted with a protective device consisting of a gauze diaphragm or a perforated plate.

2.12 Exhaust pipes

2.12.1 Exhausts shall be evacuated from the vessel into the open air either upwards through an exhaust pipe or through the shell plating. The exhaust outlet shall be located not less than 2,00 m from any hazardous area comparable to zone 0 or 1. The exhaust pipes of engines shall be arranged so that the exhausts are led away from the vessel. The exhaust pipes shall not be located within any hazardous area comparable to zone 0 or 1.

2.12.2 Exhaust pipes shall be provided with a device preventing the escape of sparks, e.g. spark arresters.

2.13 Bilge pumping and ballasting arrangements

2.13.1 Bilge and ballast pumps for spaces within the cargo area shall be installed within such area.

This provision does not apply to:

- double hull spaces and double bottoms which do not have a common boundary wall with the cargo tanks
- cofferdams, double hull spaces, hold spaces and double bottoms where ballasting is carried out using the piping of the fire fighting system in the cargo area and bilge-pumping is performed using eductors which are installed in the cargo area.

2.13.2 Where the double bottom is used as oil fuel tank, it shall not be connected to the bilge piping system.

2.13.3 Where the ballast pump is installed in the cargo area, the standpipe and its outboard connection for suction of ballast water shall be located within the cargo area but outside the cargo tanks.

2.13.4 A cargo pump-room below deck shall be capable of being drained in an emergency by an installation located in the cargo area and independent from any other installation. This installation shall be provided outside the cargo pump-room.

2.14 Ventilation of cargo pump rooms

2.14.1 Cargo pump rooms must be provided with extraction type ventilation systems, independent of other vessel's spaces, providing at least 30 cycles of air change per hour. Warning notices shall be placed requiring that the ventilation is in operation for at least 15 minutes prior to entering these spaces.

2.14.2 Portable means must be provided for gas-freeing of cargo tanks and other spaces not equipped with fixed ventilation.

2.15 Arrangements of cofferdams

2.15.1 Cofferdams or cofferdam compartments remaining once a service space has been arranged in accordance with [2.6.6] and [2.7.1] shall be accessible through an access hatch.

2.15.2 No fixed pipe shall permit connection between a cofferdam and other piping of the vessel outside the cargo area.

3 Cargo containment

3.1 General

3.1.1 DG-N may be arranged in three different designs in respect of cargo tank venting with due regard to the products allowed to be carried:

- DG-N, open venting
- DG-N, open venting, flame arresters
- DG-N, closed.

3.1.2 The scantlings and structural arrangements are to be in compliance with applicable requirements of Ch 1, Sec 3, [6] to Ch 1, Sec 3, [11].

3.2 Cargo area hull design

3.2.1 In the cargo area, the vessel shall be designed according to [3.2.2] and [3.2.3].

Alternative constructions will be specially considered by the Society on a case-by-case basis.

3.2.2 Where independent cargo tanks are used, or for double-hull construction where the cargo tanks are integrated in vessel's structure, the space between the wall of the vessel and wall of the cargo tanks shall be not less than 0,60 m.

The space between the bottom of the vessel and the bottom of the cargo tanks shall be not less than 0,50 m. The space may be reduced to 0,40 m under the pump sumps. The vertical space between the suction well of a cargo tank and the bottom structures shall be not less than 0,10 m.

When a hull is constructed in the cargo area as a double hull with independent cargo tanks located in hold spaces, the above values are applicable to the double hull. If in this case the minimum values for inspections of independent tanks referred to in [2.6.8] are not feasible, it must be possible to remove the cargo tanks easily for inspection.

3.2.3 Where service spaces are located in the cargo area under deck, they shall be arranged so as to be easily accessible and to permit persons wearing protective clothing and breathing apparatus to safely operate the service equipment contained therein. They shall be designed so as to allow injured or unconscious personnel to be removed from such spaces without difficulties, if necessary by means of fixed equipment.

3.3 Cargo tank arrangements

3.3.1 The cargo tank is to comply with the following:

- for vessels with a length not more than 50,00 m, the length of a cargo tank shall not exceed 10,00 m
- for vessels with a length of more than 50,00 m, the length of a cargo tank shall not exceed 0,20 L, where L is the vessel rule length. This provision does not apply to vessels with independent built-in cylindrical tanks having a length to diameter ratio ≤ 7.

3.3.2 The capacity of a suction well shall be limited to not more than 0,10 m^3.

3.4 Integrated tank scantlings

3.4.1 The scantlings of the integrated tank structure are to be determined in compliance with Ch 1, Sec 3.

3.5 Independent cargo tank scantlings

3.5.1 Tank scantlings

The scantlings of independent cargo tank structure are to be determined in compliance with Ch 1, Sec 3, [6.1.2].

When the vessel is provided with pressure cargo tanks, these tanks shall be designed in compliance with Pt C, Ch 1, Sec 3, for a working pressure of 400 kPa.

3.5.2 Supports and fastenings

The cargo tanks independent of the vessel's hull shall be fixed so that they cannot float.

The scantlings of the tank supports and fastenings are to be in compliance with Ch 1, Sec 3, [9].

3.6 Cargo tank openings

3.6.1

a) Cargo tank openings shall be located on deck in the cargo area.

b) Cargo tank openings with a cross-section of more than 0,10 m^2 and openings of safety devices for preventing overpressures shall be located not less than 0,50 m above deck.

3.6.2 For DG-N closed, cargo tank openings shall be fitted with gastight closures capable of withstanding the test pressure in accordance with Pt B, Ch 3, Sec 4, [5].

3.6.3 Safety devices

Each cargo tank or group of cargo tanks connected to a common venting piping shall be fitted with:

DG-N open:

- devices to prevent unacceptable overpressures or vacuums and constructed so as to prevent any accumulation of water and penetration of water into the cargo tank.

DG-N open with flame arresters:

- devices to prevent unacceptable overpressures or vacuums, equipped with flame arresters capable of withstanding steady burning and constructed so as to prevent any accumulation of water and penetration of water into the cargo tank.

DG-N closed:

a) a connection for the safe return ashore of gases expelled during loading

b) a safe depressurization device for the cargo tanks, on which the position of the shut-off valve indicates clearly whether it is open or shut

c) safety valves for preventing unacceptable overpressures or vacuums;

The opening pressure of the safety valves shall be marked indelibly on the valves

d) If the list of substances on the vessel according to Ch 3, Sec 1, [4.3.2] is going to include substances that require explosion protection in accordance with column (17) of Ch 3, App 3, Tab 2, then:

- at the connection to each cargo tank, the venting piping shall be equipped with a flame arrester capable of withstanding a detonation
- the vacuum valve and the safe depressurization device for cargo tanks shall be deflagration safe. The deflagration safety may also be ensured by a flame arrester; and
- the pressure relief device shall be designed as a high velocity vent valve, with the gases discharged upwards

The setting of the pressure relief valves shall be such that during the transport operation they do not blow off until the maximum permissible working pressure of the cargo tanks is reached

The protection systems shall be chosen according to the explosion groups/subgroups of the substances listed in the list of substances on the vessel (see column (16) of Ch 3, App 3, Tab 2);

If the high velocity vent valve, the vacuum valve, the flame arresters and the venting piping are required to be heatable for carriage, the safety devices concerned shall be suitable for the relevant temperature;

The opening pressure of the pressure relief valves, the vacuum valve and the high velocity vent valves shall be marked indelibly on the valves;

If a shut-off device is to be mounted between the venting piping and the cargo tank, it shall be placed between the cargo tank and the flame arrester, and each cargo tank shall be equipped with pressure relief valves;

e) The outlets of the pressure relief devices/high velocity vent valves shall be located not less than 2,00 m above the deck and at a distance of not less than 6,00 m from the openings of the accommodations, the wheelhouse and the service spaces outside the cargo area. This height may be reduced to 1,00 m when there is no equipment and no work is being carried out within a radius of 1,00 m around the pressure relief valve outlet. This area shall be marked as a danger zone.

3.6.4 Venting piping - DG-N closed

a) When two or more cargo tanks are connected to common venting piping, it is sufficient that the equipment according to [3.6.3] (safety valves to prevent unacceptable overpressures and vacuums, high velocity vent valve, vacuum valve protected against deflagrations, safe pressure relief device for cargo tanks protected against deflagrations) is installed on the joint venting piping.

b) When each cargo tank is connected to its own venting piping, each cargo tank or the associated venting piping shall be equipped according to [3.6.3].

3.6.5 Additional requirement for DG-N closed and DG-N open with flame arrester

Closures which are normally used during loading or unloading operations shall not cause sparking when operated.

4 Cargo piping system

4.1 General

4.1.1 The requirements [4.1.2], [4.1.4], [4.2.2], [4.2.5] and [4.4.1] do not apply unless the substance carried has corrosive properties.

4.1.2 Pumps and accessory loading and unloading piping shall be placed in an area between the fore vertical plane and the aft vertical plane bounding the part of the cargo area below deck.

4.1.3 Cargo pumps shall be capable of being shut down from the area described in [4.1.2] and from a position outside this area.

4.1.4 Cargo pumps situated on deck shall be located not less than 6,00 m from entrances to, or openings of, the accommodation and service spaces outside any hazardous area comparable to zone 0 or 1.

4.2 Arrangement of cargo piping

4.2.1 Piping for loading and unloading shall be independent of any other piping of the vessel.

4.2.2 No cargo piping shall be located below deck, except those inside the cargo tanks and inside the cargo pump room.

4.2.3 The piping for loading and unloading shall be arranged so that, after loading or unloading operations, the liquid remaining in these pipes may be safely removed and may flow either into the vessel's tanks or the tanks ashore.

4.2.4 Piping for loading and unloading shall be clearly distinguishable from other piping, e.g. by means of colour marking.

4.2.5 The shore connections shall be located not less than 6,00 m from the entrances to or openings of, the accommodation and service spaces outside any hazardous area comparable to zone 0 or 1.

4.2.6 Each shore connection of the venting pipe and shore connections of the pipes for loading and unloading, through which the loading or unloading operation is carried out, shall be fitted with a shut-off device. However, each shore connection shall be fitted with a blind flange when it is not in operation.

4.2.7 Piping for loading and unloading, and venting pipes, shall not have flexible connections fitted with sliding seals.

4.2.8 If the vessel is carrying several dangerous substances liable to react dangerously with each other, a separate pump with its own piping for loading and unloading shall be installed for each substance. The piping shall not pass through a cargo tank containing dangerous substances with which the substance in question is liable to react.

4.3 Control, monitoring and alarm devices

4.3.1 Stop valves

The stop valves or other shut-off devices of the piping for loading and unloading shall indicate whether they are open or shut.

4.3.2 Pressure gauges

The piping for loading and unloading shall be fitted with pressure gauges at the outlet of the pumps.

The permissible maximum overpressure or vacuum value shall be indicated on each measuring device.

4.4 Bonding

4.4.1 Every component of the piping for loading and unloading shall be electrically connected to the hull.

4.5 Supply of cargo tanks with washing or ballast water

4.5.1 When piping for loading and unloading are used for supplying the cargo tanks with washing or ballast water, the suctions of these pipes shall be located within the cargo area but outside the cargo tanks.

Pumps for tank washing systems with associated connections may be located outside the cargo area, provided the discharge side of the system is arranged in such a way that suction is not possible through that part.

A spring-loaded non-return valve shall be provided to prevent any gases from being expelled from the cargo area through the tank washing system.

4.5.2 A non-return valve shall be fitted at the junction between the water suction pipe and the cargo loading pipe.

4.6 Permissible loading and unloading flows

4.6.1 The permissible loading and unloading flows shall be calculated.

4.6.2 Calculations concern the permissible maximum loading and unloading flow for each cargo tank or each group of cargo tanks, taking into account the design of the ventilation system. These calculations shall take into consideration the fact that in the event of an unforeseen cut-off of the gas return piping or the compensation piping of the shore facility, the safety devices of the cargo tanks will prevent pressure in the cargo tanks from exceeding the following values:

- over-pressure: 1.15 times the opening pressure of the pressure relief valve/high velocity vent valve
- vacuum pressure: not more than the design pressure, but not exceeding a vacuum of 5 kPa (0,05 bar).

4.7 Additional requirements for DG-N closed and DG-N open with flame arrester

4.7.1 The piping for loading shall extend down to the bottom of the cargo tank.

5 Cargo pressure and temperature control

5.1 Regulation of cargo pressure and temperature

5.1.1 Unless the entire cargo system is designed to resist the full effective vapour pressure of the cargo at the upper limits of the ambient design temperatures, the pressure of the tanks shall be kept below the permissible maximum set pressure of the safety valves, by one or more of the following means:

- a system for the regulation of cargo tank pressure using mechanical refrigeration
- a system ensuring safety in the event of the heating or increase in pressure of the cargo. The insulation or the design pressure of the cargo tank, or the combination of these two elements, shall be such as to leave an adequate margin for the operating period and the temperatures expected; in each case the system shall be deemed acceptable by the Society and shall ensure safety for a minimum time of three times the operation period
- other systems deemed acceptable by the Society.

5.1.2 The systems prescribed in [5.1.1] shall be constructed, installed and tested to the satisfaction of the Society. The materials used in their construction shall be compatible with the cargoes to be carried. For normal service, the upper ambient design temperature limits shall be:

- air: + 30°C
- water: + 20°C.

5.2 Refrigeration system

5.2.1 The refrigeration system referred to in [5.1.1] shall be composed of one or more units capable of keeping the pressure and temperature of the cargo at the upper limits of the ambient design temperatures at the prescribed level. Unless another means of regulating cargo pressure and temperature deemed satisfactory by the Society is provided, provision shall be made for one or more stand-by units with an output at least equal to that of the largest prescribed unit. Provision shall be made for a stand-by heat-exchanger unless the system's normal heat-exchanger has a surplus capacity equal to at least 25% of the largest prescribed capacity.

Cargo tanks, piping and accessories shall be insulated so that, in the event of a failure of all cargo refrigeration systems, the entire cargo remains for at least 52 hours in a condition not causing the safety valves to open.

5.2.2 When several refrigerated cargoes with a potentially dangerous chemical reaction are carried simultaneously, particular care shall be given to the refrigeration systems so as to prevent any mixing of the cargoes. For the carriage of such cargoes, separate refrigeration systems, each including the full stand-by unit referred to in [5.2.1], shall be provided for each cargo.

5.2.3 When several refrigerated cargoes are not soluble in each other under conditions of carriage such that their vapour pressures are added together in the event of mixing, particular care shall be given to the refrigeration systems to prevent any mixing of the cargoes.

5.2.4 All primary and secondary coolant fluids shall be compatible with each other and with the cargo with which they may come into contact.

5.2.5 When the refrigeration system is installed in a separate service space, this service space shall meet the requirements of [2.5.2].

5.3 Cargo tank heating

5.3.1 Cargo tank heating system is to be installed as a separate system, equipped with a heat exchanger located in the cargo area. Where special heat transfer media are used, this requirement may be dispensed with upon approval by the Society.

5.3.2 Boilers which are used for heating the cargo shall be fuelled with a liquid fuel having a flashpoint of more than 55°C. They shall be placed either in the engine room or in another separate space below deck and outside the cargo area, which is accessible from the deck or from the engine room.

5.3.3 The cargo heating system shall be designed so that the cargo cannot penetrate into the boiler in the case of a leak in the heating coils. A cargo heating system with artificial draught shall be ignited electrically.

5.3.4 The ventilation system of the engine room shall be designed taking into account the air required for the boiler.

5.3.5 Where the cargo heating system is used during loading, unloading or gas-freeing, the service space which contains this system shall fully comply with [8.1.1]. This requirement does not apply to the inlets of the ventilation system. These inlets shall be located at a minimum distance of 2,00 m from any hazardous area comparable to zone 0 or 1 and 6,00 m from the openings of cargo tanks or residual cargo tanks, loading pumps situated on deck, openings of high velocity vent valves, pressure relief devices and shore connections of loading and unloading pipes and must be located not less than 2,00 m above the deck.

The requirements of [8.1.1] are not applicable to the unloading of substances having a flash point of 60 °C or more when the temperature of the product is at least 15 K lower at the flash point.

5.4 Water spray system

5.4.1 When water-spraying is required in column (9) of Ch 3, App 3, Tab 2, a water-spray system shall be installed in the cargo area on deck for the purpose of cooling the tops of cargo tanks by spraying water over the whole surface so as to avoid safely the activation of the pressure relief valves/high velocity vent valves at 10 kPa or as regulated.

5.4.2 The spray nozzles shall be so installed that the entire cargo deck area is covered and the gases released are precipitated safely. The system shall be capable of being put into operation from the wheelhouse and from the deck. Its capacity shall be such that when all the spray nozzles are in operation, the outflow is not less than 50 litres per square metre of deck area and per hour.

6 Residual cargo tanks and receptacles for residual products

6.1 General

6.1.1 When vessels are provided with tanks for residual products or receptacles for residual products, they shall be located in the cargo area and comply with the provisions of [6.1.2] and [6.1.3]. Receptacles for residual products shall be located only in the cargo area on deck and not less than a quarter of the vessel's breadth from the outer shell.

6.1.2 Tanks for residual products shall be equipped with:

In the case of an open system:

- an ullage opening
- a device for ensuring pressure equilibrium
- connections, with stop valves, for pipes and hoses

In the case of an open system with flame arrester:

- an ullage opening
- connections, with stop valves, for pipes and hose assemblies
- a device for ensuring pressure equilibrium, fitted with a flame arrester capable of withstanding steady burning.

In the case of a closed system:

- a level indicator
- connections, with stop valves, for pipes and hose assemblies
- a vacuum valve and a pressure relief valve

The pressure relief valve shall be sized so that, during the transport operation, it does not open when in normal operation. This condition is met when the opening pressure of the valve meets the conditions required in column (10) of Ch 3, App 3, Tab 2 for the substance to be carried.

If the list of substances on the vessel according to Ch 3, Sec 1, [4.3.2] is going to include substances that require explosion protection in accordance with column (17) of Ch 3, App 3, Tab 2, then the pressure relief valve shall be a high velocity vent valve and the vacuum valve shall be deflagration safe. The deflagration safety may also be ensured by a flame arrester.

The high velocity vent valve and the deflagration safe vacuum valve shall be chosen according to the explosion groups/subgroups of the substances listed in the list of substances on the vessel (see column (16) of Ch 3, App 3, Tab 2).

The maximum permissible capacity is 30 m^3.

6.1.3 Receptacles for residual products shall be equipped with:

- a possibility of indicating the degree of filling
- connections, with stop valves, for pipes and hose assemblies
- a connection enabling gases released during filling to be evacuated safely

7 Environmental control

7.1 Inerting facility

7.1.1 In cases in which inerting or blanketing of the cargo is prescribed, the vessel shall be equipped with an inerting system.

7.1.2 This system shall be capable of maintaining a permanent minimum pressure of 7 kPa (0,07 bar) in the spaces to be inerted. In addition, the inerting system shall not increase the pressure in the cargo tank to a pressure greater than that at which the pressure valve is regulated. The set pressure of the vacuum-relief valve shall be 3,5 kPa (0,035 bar).

7.1.3 The premises to be inerted shall be equipped with connections for introducing the inert gas and monitoring systems so as to ensure the correct atmosphere on a permanent basis.

8 Electrical installations

8.1 Type and location of electrical installations and equipment

8.1.1 Electrical installations and equipment shall be of at least the "limited explosion risk" type.

This provision does not apply to:

a) Lighting installations in the accommodation and the wheelhouse, except for switches near to the entrances

b) Mobile phones, fixed telephone installations, stationary and portable computers and loading instruments in the accommodation or the wheelhouse

c) Electrical installations and equipment which, during a stay in the immediate vicinity of or within a shoreside assigned zone:

   1) are extinguished; or

   2) are placed in premises equipped with a ventilation system according to [2.8] and [2.9]

d) Radiotelephone installations and inland AIS (automatic identification systems) stations in the accommodation and the wheelhouse, if no part of an aerial for radiotelephone installations or AIS stations is situated above or within 2,00 m of the cargo area.

8.1.2 In the cofferdams, double-hull spaces, double bottoms and hold spaces, only hermetically sealed echo sounding devices are allowed, the cables of which are led through thick-walled steel tubes with gastight connections up to the main deck.

8.1.3 The fixed electrical installations and equipment which do not meet the requirements set out in [8.1.1] and their switches shall be marked in red. The disconnection of such equipment shall be controlled from a centralized location on board.

8.1.4 Every insulated distribution network shall be fitted with an automatic device with a visual and audible alarm for checking the insulation level.

8.1.5 Only distribution systems without return connection to the hull are permitted. This provision does not apply to:

- Active cathodic corrosion protection
- Certain limited sections of the installations situated outside the cargo area (e.g., connections of starters of diesel engines)
- The device for checking the insulation level referred to in [8.1.4].

8.1.6 An electric generator which is permanently driven by an engine and which does not meet the requirements of [8.1.1], shall be fitted with a switch capable of shutting down the generator. A notice board with the operating instructions shall be displayed near the switch.

8.1.7 Failure of the power supply for the safety and control equipment shall be immediately indicated by visual and audible signals in the wheelhouse and on the deck. The alarm must be relayed to the accommodation automatically if it has not been switched off.

8.1.8 Electrical switches, sockets and cables on deck shall be protected against mechanical damage.

8.1.9 Sockets for the connection of signal lights and gangway lighting shall be solidly fitted to the vessel close to the signal mast or the gangway. The sockets used in this area shall be designed so as to prevent connection or disconnection except when they are not live.

8.1.10 DG-N open vessels are only required to meet the requirements of [8.1.1] and [8.1.3], if the vessel remains in the immediate vicinity of or within a shoreside assigned zone.

8.2 Type and location of electrical and non-electrical installations and equipment intended to be used in explosion hazardous areas

8.2.1 On board vessels covered by the classification of zones as defined in Ch 3, App 1, Tab 1, electrical and non-electrical installations and equipment used in explosion hazardous areas shall meet at least the requirements for use in the area concerned.

They shall be selected on the basis of the explosion groups/subgroups and temperature classes to which the substances to be carried belong (see columns (15) and (16) of Ch 3, App 3, Tab 2).

If the list of substances on the vessel according to Ch 3, Sec 1, [4.3.2] is going to include substances for which temperature classes T4, T5 or T6 are indicated in column (15) of Ch 3, App 3, Tab 2, then the corresponding surface temperatures within the assigned zones shall not exceed 135°C (T4), 100° (T5) or 85°C (T6).

If the list of substances on the vessel according to Ch 3, Sec 1, [4.3.2] is going to include substances for which temperature classes T1 or T2 are indicated in column (15) of Ch 3, App 3, Tab 2, then the corresponding surface temperatures within the assigned zones shall not exceed 200°C.

8.2.2 Except in the case of optical fibres, electrical cables shall be armoured or placed in a metallic sheath or in protective tubes.

Electrical cables for the active cathodic protection of the shell plating shall be led through thick-walled steel tubes with gastight connections up to the main deck.

8.2.3 Movable electric cables are prohibited in the explosion danger area, except for electric cables for intrinsically safe electric circuits or for connecting:

- Signal lights and lighting for gangways, provided the connection point (for example, the socket) is permanently fitted to the vessel close to the signal mast or gangway
- The power network on a vessel to a land-based power network; provided
  - The electric cables and the power supply unit conform with a valid standard
  - The power supply unit and connectors are located outside of the explosion danger area.

Connecting and disconnecting sockets/connectors shall only be possible when they are not live.

8.2.4 Electrical cables of intrinsically safe circuits shall be separated from other cables not intended for use in such circuits and shall be marked (they shall not be installed together in the same string of cables and they shall not be fixed by the same cable clamps).

8.2.5 For movable electrical cables permitted under, only sheathed cables of type H07RN-F in accordance with standard IEC 60245-4:2011 or electrical cables of at least equivalent design having conductors with a cross-section of not less than 1.50 mm^2 shall be used.

8.3 Earthing

8.3.1 The metal parts of electrical appliances in the cargo area which are not live as well as protective metal tubes or metal sheaths of cables in normal service shall be earthed, unless they are so arranged that they are automatically earthed by bonding to the metal structure of the vessel.

8.3.2 The provisions of [8.3.1] apply also to equipment having service voltages of less than 50 V.

8.3.3 Independent cargo tanks, metal intermediate bulk containers and tank-containers shall be earthed.

8.3.4 Receptacles for residual products shall be capable of being earthed.

8.4 Storage batteries

8.4.1 Storage batteries shall be located outside any hazardous area comparable to zone 0 or 1.

9 Fire protection and fire extinction

9.1 Fire and naked light

9.1.1 The outlets of funnels shall be located not less than 2,00 m from any hazardous area comparable to zone 0 or 1. Arrangements shall be provided to prevent the escape of sparks and the entry of water.

9.1.2 Heating, cooking and refrigerating appliances shall not be fuelled with liquid fuels, liquid gas or solid fuels.

The installation in the engine room or in another separate space of heating appliances fuelled with liquid fuel having a flash-point above 55°C is, however, permitted.

Cooking and refrigerating appliances are permitted only in the accommodation.

9.1.3 Only electrical lamps are permitted.

9.2 Fire extinguishing arrangements

9.2.1 In addition to the requirements of Part C, Chapter 4, the fire extinguishing arrangements in [9.3] to [9.5] are to be complied with.

9.3 Portable fire extinguishers

9.3.1 In addition to the fire-extinguishing appliances prescribed in Pt C, Ch 4, Sec 4, [2], the vessel shall be equipped with at least two additional portable fire-extinguishers having the same capacity in cargo area.

These additional portable fire-extinguishers shall be suitable for fighting fires involving the dangerous goods carried.

9.4 Fire extinguishing system

9.4.1 A fire-extinguishing system complying with the following requirements shall be installed on the vessel:

- It shall be supplied by two independent fire or ballast pumps, one of which shall be ready for use at any time. These pumps and their means of propulsion and electrical equipment shall not be installed in the same space.
- It shall be provided with a water main fitted with at least three hydrants in the cargo area above deck. Three suitable and sufficiently long hoses with spray nozzles having a diameter of not less than 12 mm shall be provided.
- It shall be possible to reach any point of the deck in the cargo area simultaneously with at least two jets of water not supplied from the same hydrant.

  A spring-loaded non-return valve shall be fitted to ensure that no gases can escape through the fire-extinguishing system into the accommodation or service spaces outside the cargo area.
- The capacity of the system shall be at least sufficient for a jet of water to have a minimum reach of not less than the vessel's breadth from any location on board with two spray nozzles being used at the same time.

9.5 Fixed fire extinguishing system

9.5.1 In addition the machinery spaces and the cargo pump room shall be provided with a permanently fixed fire-extinguishing system, in compliance with Pt C, Ch 4, Sec 4, [4].

10 Safety and control installations

10.1 General

10.1.1 Cargo tanks shall be provided with the following equipment:

a) a level gauge

b) a level alarm device which is activated at the latest when a degree of filling of 90% is reached

c) a high level sensor for actuating the facility against overflowing at the latest when a degree of filling of 97,5% is reached

d) for N closed, an instrument for measuring the pressure of the vapour phase inside the cargo tank

e) an instrument for measuring the temperature of the cargo, if in column (9) of Ch 3, App 3, Tab 2, a cargo heating installation or a possibility of heating the cargo is required on board, or if a maximum temperature is indicated in column (20) of Ch 3, App 3, Tab 2

f) A connection for a closed-type or partly closed-type sampling device, and/or at least one sampling opening as required in column (13) of Ch 3, App 3, Tab 2. The connection shall be fitted with a shut-off device resistant to the internal pressure at the connection.

   If the list of substances on the vessel according to Ch 3, Sec 1, [4.3.2] is going to include substances that require explosion protection in accordance with column (17) of Ch 3, App 3, Tab 2, then the flame arrester plate stack capable of withstanding steady burning of the sampling opening shall be selected according to the explosion groups/subgroups of the substances foreseen for inclusion in the list of substances on the vessel (see column (16) of Ch 3, App 3, Tab 2).

10.2 Cargo tank level indicators

10.2.1 Each cargo tank is to be equipped with a closed gauging device approved by the Society.

The level gauge shall allow readings from the control position of the shut-off devices of the particular cargo tank. The permissible maximum filling level of the cargo tank shall be marked on each level gauge.

10.3 Level alarm device

10.3.1 Cargo tank shall be provided with a level alarm device which is activated at the latest when a degree of filling of 90% is reached.

The level alarm device shall give a visual and audible warning on board when actuated. The level alarm device shall be independent of the level gauge.

10.4 High level sensor

10.4.1 Cargo tank shall be provided with a high level sensor for actuating the facility against overflowing at the latest when a degree of filling of 97,5% is reached.

10.5 Cargo tank pressure monitoring - DG-N closed

10.5.1 When the pressure or temperature exceeds a set value, instruments for measuring the vacuum or overpressure of the gaseous phase in the cargo tank or the temperature of the cargo shall activate a visual and audible alarm in the wheelhouse and on deck. The alarm must be relayed to the accommodation automatically if it has not been switched off.

10.5.2 When the pressure exceeds the set value during loading and unloading, the instrument for measuring the pressure shall initiate immediately an electrical contact which shall put into effect measures to interrupt the loading or unloading operation. If the vessel's own discharge pump is used, it shall be switched off automatically.

10.5.3 The instrument for measuring the overpressure or vacuum shall activate the alarm at latest when:

a) An overpressure equal to 1,15 times the opening pressure of the pressure relief valves/high velocity vent valves is reached; or

b) The lower threshold of the design pressure of the vacuum valves, but not exceeding a vacuum of 5 kPa (0,05 bar), is reached.

10.5.4 The maximum permissible temperature is indicated in column (20) of Ch 3, App 3, Tab 2. The sensors for the alarms mentioned in this paragraph may be connected to the alarm device of the sensor.

When it is prescribed in column (20) of Ch 3, App 3, Tab 2, the instrument for measuring the overpressure of the gaseous phase in the cargo tank shall actuate a visible and audible alarm in the wheelhouse when the overpressure exceeds 40 kPa (0,4 bar) during the voyage. The alarm must be relayed to the accommodation automatically if it has not been switched off. It shall be possible to read the gauges in direct proximity to the control for the water spray system.

10.6 Cargo temperature monitoring

10.6.1 An instrument for measuring the temperature of the cargo is to be provided, if in column (9) of Ch 3, App 3, Tab 2 a heating installation is required, or if a possibility of heating the cargo is required, or if a maximum temperature is indicated in column (20).

10.7 Cargo tank sampling equipment

10.7.1 Each cargo tank shall be equipped with a connection for a sampling device, closed or partially closed, and/or at least one sampling opening as required in column (13) of Ch 3, App 3, Tab 2.

11 Buoyancy and stability

11.1 General

11.1.1 General requirements of Pt B, Ch 2, Sec 2, [1] to Pt B, Ch 2, Sec 2, [3] are to be complied with.

11.1.2 The longitudinal centre bulkhead may be dispensed with only if sufficient stability is guaranteed.

11.1.3 Proof of sufficient stability shall be furnished. This proof is not required for single hull vessels with cargo tanks the width of which is not more than 0,70B.

11.1.4 The basic values for the stability calculation (the vessel's lightweight and location of the centre of gravity) shall be determined in compliance with Pt B, Ch 2, Sec 2, [2.2].

11.1.5 Proof of sufficient intact stability shall be furnished for all stages of loading and unloading and for the final loading condition for all the relative densities of the substances transported contained in the vessel substance list according to Ch 3, Sec 1, [4.3.2].

11.1.6 For every loading case, taking account of the actual fillings and floating position of cargo tanks, ballast tanks and compartments, drinking water and sewage tanks and tanks containing products for the operation of the vessel, the vessel shall comply with the intact and damage stability requirements.

Intermediate stages during operations shall also be taken into consideration.

11.2 Intact stability

11.2.1 For vessels with independent cargo tanks and for double hull constructions with cargo tanks integrated in the frames of the vessel, the requirements for intact stability resulting from the damage stability calculation shall be fully complied with.

11.2.2 For vessels with cargo tanks of more than 0,70 B in width, the following intact stability requirements are to be complied with, bearing in mind the influence of all free surfaces in tanks for all stages of loading and unloading:

- in the positive area of the righting lever curve up to immersion of the first unprotected opening there shall be a righting lever (GZ) of not less than 0,10 m
- the surface of the positive area of the righting lever curve up to immersion of the first unprotected opening and in any event up to an angle of heel ≤ 27° shall not be less than 0,024 m.rad
- the initial metacentric height GM_0 shall be not less than 0,10 m.

11.3 Damage stability

11.3.1 For vessels with independent cargo tanks and for double hull constructions with cargo tanks integrated in the frames of the vessel, the following assumptions shall be taken into consideration for the damaged condition.

a) Extent of side damage:
   - longitudinal extent: at least 0,10 L_{OA} but not less than 5,00 m
   - transverse extent: B_2 – 0,01 m
   - vertical extent: from base line upwards without limit.

b) Extent of bottom damage:
   - longitudinal extent: at least 0,10 L_{OA} but not less than 5,00 m
   - transverse extent: 3,00 m
   - vertical extent: from base line to D_2 – 0,01 m upwards, except for pump well.

c) Any bulkhead within the damaged area shall be assumed damaged, which means that the location of bulkheads shall be chosen to ensure that the vessel remains afloat after the flooding of two or more adjacent compartments in the longitudinal direction.

   The following provisions are applicable:
   - for bottom damage, adjacent athwartship compartments shall also be assumed flooded
   - the lower edge of any non-watertight opening (e.g. windows, doors and access hatchways) shall, at the final stage of flooding, be not less than 0,10 m above the damage waterline.

11.3.2 In general, permeability shall be assumed to be 95%. Where an average permeability of less than 95% is calculated for any compartment, this calculated value obtained may be used.

However, the minimum values of permeability μ given in Tab 2 are to be used.

For the main engine room, only the one-compartment standard need be taken into account, i.e. the end bulkheads of the engine room shall be assumed as not damaged.

11.3.3 The damage stability is generally regarded sufficient if (see Fig 1):

- At the stage of equilibrium (in the final stage of flooding), the angle of heel is not greater than 12°.

  Non-watertight openings shall not be flooded before reaching the stage of equilibrium. If such openings are immersed before the stage of equilibrium, the corresponding spaces shall be considered flooded for the purpose of stability calculation.
- The positive range of the righting lever curve beyond the stage of equilibrium has a righting lever of ≥ 0,05 m in association with an area under the curve of ≥ 0,0065 m.rad. The minimum values of stability shall be satisfied up to immersion of the first unprotected (non-weathertight) opening and in any event up to an angle of heel ≤ 27°. If non-weathertight openings are immersed before that stage, the corresponding spaces shall be considered flooded for the purpose of stability calculation.

11.3.4 If openings through which undamaged compartments may additionally become flooded are capable of being closed watertight, the closing appliances shall be marked accordingly.

11.3.5 Where cross- or down-flooding openings are provided for reduction of unsymmetrical flooding, the time of equalisation shall not exceed 15 minutes, provided during the intermediate stages of flooding sufficient stability has been proved.

Table 2 : Permeability μ

Spaces	μ, in %
Engine rooms	85
Accommodation spaces	95
Double bottoms, oil fuel tanks, ballast tanks, etc., depending on whether, according to their function, they have to be assumed as full or empty for the vessel floating at the maximum permissible draught	0 or 95

Figure 1 : Proof of damage stability

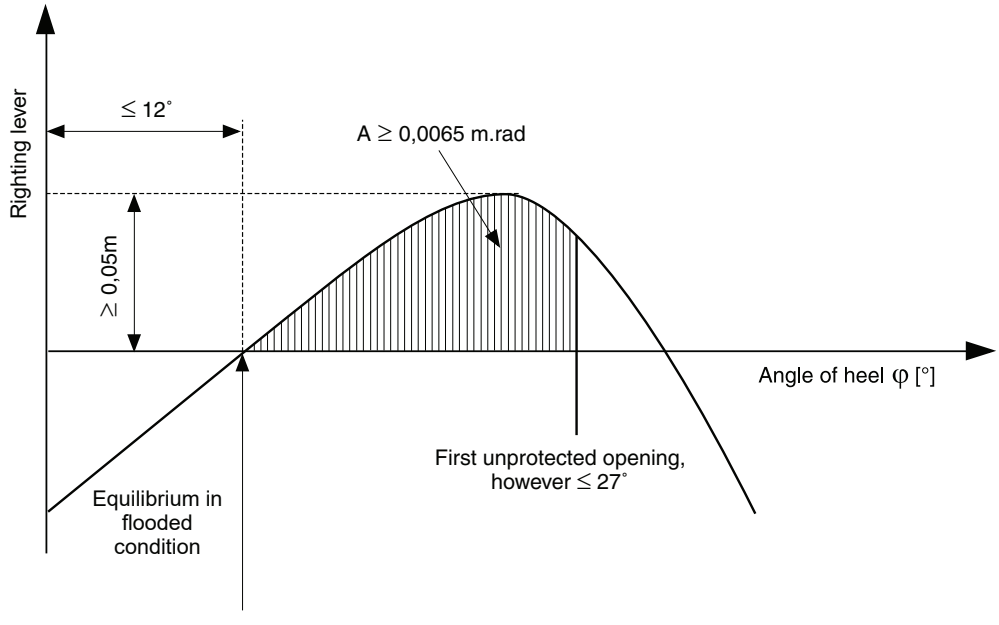

SECTION 5 OIL SEPARATOR VESSEL

Symbols

L_{OA} : Length overall, in m, defined in Pt B, Ch 1, Sec 2, [2.5]

B : Breadth, in m, defined in Pt B, Ch 1, Sec 2, [2.2]

B_2 : Breadth of the side tank, in m

D_2 : Height of the double bottom, in m.

1 General

1.1 Application

1.1.1 Vessels complying with the requirements of this Section are eligible for the assignment of the additional service feature **Oil separator vessel** as defined in Pt A, Ch 1, Sec 3, [3.2.18].

1.1.2 These Rule requirements apply in addition to Ch 1, Sec 3 and Ch 3, Sec 1.

1.1.3 Vessels without cargo tanks are considered to be subject to Ch 3, Sec 7.

1.2 Documents to be submitted

1.2.1 Tab 1 lists the plans and documents to be submitted in addition to the documents required in the other Parts of the Rules for the parts of the vessel not affected by the cargo, as applicable.

2 Vessel arrangement

2.1 Protection against penetration of gases

2.1.1 The vessel shall be designed so as to prevent dangerous gases and liquids from penetrating into the accommodation, wheelhouse and the service spaces. None of the windows in these spaces shall be capable of being opened unless its intended use is as an emergency exit and it is marked as such.

2.1.2 The requirement [2.1.1] is to be met only if the vessel remains in the immediate vicinity of or within a shoreside assigned zone.

2.2 Engine rooms

2.2.1 Internal combustion engines for the vessel's propulsion as well as internal combustion engines for auxiliary machinery shall be located outside the cargo area. Entrances and other openings of engine rooms shall be at a distance of not less than 2,00 m from any hazardous area comparable to zone 0 or 1.

2.2.2 The engine rooms shall be accessible from the deck; the entrances shall not face the cargo area.

2.3 Accommodation and service spaces

2.3.1 Accommodation spaces and the wheelhouse shall be located outside the cargo area forward of the fore vertical plane or abaft the aft vertical plane bounding the part of cargo area below deck. Windows of the wheelhouse which are located not less than 1,00 m above the bottom of the wheelhouse may tilt forward.

2.3.2 Entrances to spaces and openings of superstructures shall not face the cargo area.

2.3.3 Entrances from the deck and openings of spaces facing the weather shall be capable of being closed.

2.3.4

a) Driving shafts of the bilge or ballast pumps in the cargo area may penetrate through the bulkhead between the service space and the engine room, provided the arrangement of the service space is in compliance with [2.4.6].

b) The penetration of the shaft through the bulkhead shall be gastight and shall have been approved by the Society.

c) Penetrations through the bulkhead between the engine room and the service space in the cargo area, and the bulkhead between the engine room and the hold spaces may be provided for electrical cables, hydraulic and piping for measuring, control and alarm systems, provided that the penetrations have been approved by the Society. The penetrations shall be gastight. Penetrations through a bulkhead with an "A-60" fire protection insulation (see Pt C, Ch 4, Sec 1, [2.2]), shall have an equivalent fire protection.

d) Pipes may penetrate the bulkhead between the engine room and the service space in the cargo area provided that these are pipes between the mechanical equipment in the engine room and the service space which do not have any openings within the service space and which are provided with shut-off devices at the bulkhead in the engine room.

e) Notwithstanding [2.4.4], pipes from the engine room may penetrate the service space in the cargo area or a cofferdam or a hold space or a double-hull space to the outside provided that within the service space or cofferdam or hold space or doublehull space they are of the thick-walled type and have no flanges or openings.

Table 1 : Documents to be submitted

No.	A/I	Document
1	I	List of substances intended to be carried with their UN number (see Ch 3, App 3, Tab 2), including all design characteristics of substances and other important design conditions
2	I	General arrangement plan, showing location of cargo tanks and fuel oil, ballast and other tanks, void spaces
3	A	Hazardous areas plan and location of the electrical equipment installed in these areas
4	A	Ventilation duct arrangement in gas-dangerous spaces and adjacent zones
5	A	Details of hull structure in way of cargo tanks, including support arrangement for tanks, saddles, anti-floating and anti-lifting devices, deck sealing arrangements, independent cargo tanks, etc.
6	A	Intact and damage stability calculations
7	A	Scantlings, material and arrangement of the cargo containment system
8	A	Details of cargo handling system, including arrangements and details of piping and fittings
9	A	Details of cargo pumps
10	A	Bilge and ballast system in cargo area
11	A	Gas freeing system in cargo tanks
12	A	Ventilation system in cargo area
13	A	List of the electrical equipment installed in hazardous areas comparable to zone 0 and 1, including the following equipment particulars: location, type of protection, type of protection against explosion, testing body and approval number
14	A	Schematic electrical wiring diagram
15	A	Gas detection system
16	A	Cargo tank instrumentation
17	A	Details of fire-extinguishing appliances and systems in cargo area
18	A	Arrangement drawing of the various fire bulkheads and decks with standard fire test reports for the various arrangements, surface coverings, paints and similar
19	I	Loading and unloading operation description, including cargo tank filling limits, where applicable
20	A	List of equipment installed in hazardous areas comparable to zone 2 which may be used during loading, unloading and gas-freeing and red equipment

Note 1:
A = to be submitted for review
I = to be submitted for information.

2.3.5 A service space located within the cargo area below deck shall not be used as a cargo pump room for the loading and unloading system, except where the cargo pump room is provided with a permanent oxygen detection system which automatically indicates the amount of oxygen and which actuates a visual and audible alarm when the oxygen concentration has reached 19.5% by volume.

The sensors of this system shall be placed at suitable positions at the bottom and at a height of 2,00 m. Measurement shall be continuous and displayed near to the entrance. Audible and visual alarms shall be installed in the wheelhouse and in the cargo pump-room and, when the alarm is actuated, the loading and unloading system shall be shut down.

Failure of the oxygen measuring system shall activate a visual and audible alarm in the wheelhouse and on deck. The alarm must be relayed to the accommodation automatically if it has not been switched off.

2.4 Hold spaces

2.4.1 The cargo tanks shall be separated by cofferdams of at least 0,60 m in width from the accommodation, engine room and service spaces outside the cargo area below deck or, if there are no such accommodation, engine room and service spaces, from the vessel's ends. Where the cargo tanks are installed in a hold space, a space of not less than 0,50 m shall be provided between such tanks and the end bulkheads of the hold space. In this case an end bulkhead meeting at least the definition for Class "A-60" (see Pt C, Ch 4, Sec 1, [2.2]), shall be deemed equivalent to a cofferdam. For pressure cargo tanks, the 0,50 m distance may be reduced to 0,20 m.

2.4.2 Hold spaces, cofferdams and cargo tanks shall be capable of being inspected.

2.4.3 All spaces in the cargo area shall be capable of being ventilated. Means for checking their gas-free condition shall be provided.

2.4.4 The bulkheads bounding the cargo tanks, cofferdams and hold spaces shall be watertight. The cargo tanks and the bulkheads bounding the cargo area shall have no openings or penetrations below deck.

The bulkhead between the engine room and the cofferdam or service space in the cargo area or between the engine room and a hold space may be fitted with penetrations provided that they conform to the provisions of [2.3.4].

The bulkheads between the cargo tanks may be fitted with penetrations provided that the loading and unloading pipes are fitted with shut-off devices in the cargo tank from which they come. The shut-off devices shall be operable from the deck.

These pipes shall be at least 0,60 m above the bottom.

2.4.5 Double hull spaces and double bottoms in the cargo area shall be arranged for being filled with ballast water only. Double bottoms may, however, be used as fuel oil tanks, provided they comply with [2.7].

2.4.6

a) A cofferdam, the centre part of a cofferdam or another space below deck in the cargo area may be arranged as a service space, provided the bulkheads bounding the service space extend vertically to the bottom. This service space shall only be accessible from the deck.

b) The service space shall be watertight with the exception of its access hatches and ventilation inlets.

2.4.7 Where service spaces are located in the cargo area under deck, they shall be arranged so as to be easily accessible and to permit persons wearing protective clothing and breathing apparatus to safely operate the service equipment contained therein. They shall be designed so as to allow injured or unconscious personnel to be removed from such spaces without difficulty, if necessary by means of fixed equipment.

2.4.8 Cofferdams, double-hull spaces, double bottoms, cargo tanks, hold spaces and other accessible spaces within the cargo area shall be arranged so that they may be completely inspected and cleaned in an appropriate manner. The dimensions of openings, except for those of double hull spaces and double bottoms which do not have a wall adjoining the cargo tanks, shall be in compliance with Pt B, Ch 2, Sec 1, [3.2.2].

2.5 Ventilation

2.5.1 Each hold space shall have two openings the dimensions and location of which shall be such as to permit effective ventilation of any part of the hold space.

2.5.2 Double-hull spaces and double bottoms within the cargo area which are not arranged for being filled with ballast water, hold spaces and cofferdams, shall be provided with ventilation systems.

2.5.3 Any service spaces located in the cargo area below deck shall be provided with a suitable ventilation installation.

2.5.4 Ventilation of accommodation and service spaces shall be possible.

2.6 Engines

2.6.1 Only internal combustion engines running on fuel having a flash point above 55°C are allowed. This provision does not apply to internal combustion engines which are part of propulsion and auxiliary systems fitted onboard vessels assigned one of the additional service features **Dualfuel** or **Gasfuel** according to Pt A, Ch 1, Sec 3, [1.3.5].

2.7 Oil fuel tanks

2.7.1 When the vessel is provided with hold spaces, the double bottoms within these spaces may be arranged as oil fuel tanks, provided their depth is not less than 0,60 m.

Oil fuel pipes and openings of such tanks are not permitted in the hold space.

2.7.2 The open ends of the air pipes of all liquid oil fuel tanks shall extend to not less than 0,50 m above the open deck. Their open ends and the open ends of overflow pipes leading on the deck shall be fitted with a protective device consisting of a gauze diaphragm or a perforated plate.

2.8 Exhaust pipes

2.8.1 Exhausts shall be evacuated from the vessel into the open air either upwards through an exhaust pipe or through the shell plating. The exhaust pipes of engines shall be arranged so that the exhausts are led away from the vessel. The exhaust pipes shall not be located within any hazardous area comparable to zone 0 or 1.

2.8.2 Exhaust pipes shall be provided with a device preventing the escape of sparks, e.g. spark arresters.

2.9 Bilge pumping and ballasting arrangements

2.9.1 Bilge and ballast pumps for spaces within the cargo area shall be installed within such area.

This provision does not apply to:

- double-hull spaces and double bottoms which do not have a common boundary wall with the cargo tanks
- cofferdams, double hull spaces, hold spaces and double bottoms where ballasting is carried out using the piping of the firefighting system in the cargo area and bilge-pumping is performed using eductors which are installed in the cargo area.

2.9.2 Where the double bottom is used as oil fuel tank, it shall not be connected to the bilge piping system.

2.9.3 Where the ballast pump is installed in the cargo area, the standpipe and its outboard connection for suction of ballast water shall be located within the cargo area but outside the cargo tanks.

2.9.4 A cargo pump-room below deck shall be capable of being drained in an emergency by an installation located in the cargo area and independent from any other installation. This installation shall be provided outside the cargo pump-room.

2.10 Ventilation of cargo pump rooms

2.10.1 Cargo pump rooms must be provided with extraction type ventilation systems, independent of other vessel's spaces, providing at least 30 cycles of air change per hour. Warning notices shall be placed requiring that the ventilation is in operation for at least 15 minutes prior to entering these spaces.

2.10.2 Portable means must be provided for gas-freeing of cargo tanks and other spaces not equipped with fixed ventilation.

2.11 Arrangements of cofferdams

2.11.1 Cofferdams or cofferdam compartments remaining once a service space has been arranged in accordance with [2.4.6] shall be accessible through an access hatch. If, however, the cofferdam is connected to a double-hull space, it is sufficient for it to be accessible from that space.

2.11.2 No fixed pipe shall permit connection between a cofferdam and other piping of the vessel outside the cargo area.

2.11.3 If the list of substances on the vessel according to Ch 3, Sec 1, [4.3.2] is going to include substances that require explosion protection in accordance with column (17) of Ch 3, App 3, Tab 2, then the ventilation openings of cofferdams shall be fitted with a flame arrester capable of withstanding a deflagration. The flame arresters shall be chosen according to the explosion groups/subgroups of the substances foreseen for inclusion in the list of substances on the vessel (see column (16) of Ch 3, App 3, Tab 2).

3 Cargo containment

3.1 General

3.1.1 The scantlings and structural arrangements are to be in compliance with applicable requirements of Ch 1, Sec 3, [6] to Ch 1, Sec 3, [11].

3.2 Cargo area hull design

3.2.1 Where independent cargo tanks are used, or for double-hull construction where the cargo tanks are integrated in vessel's structure, the space between the wall of the vessel and wall of the cargo tanks shall be not less than 0,60 m.

The space between the bottom of the vessel and the bottom of the cargo tanks shall be not less than 0,50 m. The space may be reduced to 0,40 m under the pump sumps. The vertical space between the suction well of a cargo tank and the bottom structures shall be not less than 0,10 m.

When a hull is constructed in the cargo area as a double hull with independent cargo tanks located in hold spaces, the above values are applicable to the double hull. If in this case the minimum values for inspections of independent tanks referred to in [2.4.8] are not feasible, it must be possible to remove the cargo tanks easily for inspection.

3.2.2 Where service spaces are located in the cargo area under deck, they shall be arranged so as to be easily accessible and to permit persons wearing protective clothing and breathing apparatus to safely operate the service equipment contained therein. They shall be designed so as to allow injured or unconscious personnel to be removed from such spaces without difficulties, if necessary by means of fixed equipment.

3.3 Cargo tank arrangements

3.3.1 The cargo tank is to comply with the following:

- for vessels with a length not more than 50,00 m, the length of a cargo tank shall not exceed 10,00 m
- for vessels with a length of more than 50,00 m, the length of a cargo tank shall not exceed 0,20 L, where L is the vessel rule length. This provision does not apply to vessels with independent built-in cylindrical tanks having a length to diameter ratio ≤ 7.

3.3.2 The capacity of a suction well shall be limited to not more than 0,10 m^3.

3.4 Integrated tank scantlings

3.4.1 The scantlings of the integrated tank structure are to be determined in compliance with Ch 1, Sec 3.

3.5 Independent cargo tank scantlings

3.5.1 Cargo tank scantlings

The scantlings of independent cargo tanks are to be determined in compliance with Ch 1, Sec 3, [6.1.2].

3.5.2 Supports and fastenings

The scantlings of the tank supports and fastenings are to be in compliance with Ch 1, Sec 3, [9].

3.6 Cargo tank openings

3.6.1

a) Cargo tank openings shall be located on deck in the cargo area.

b) Cargo tank openings with a cross-section of more than 0,10 m^2 and openings of safety devices for preventing overpressures shall be located not less than 0,50 m above deck.

3.6.2 Safety devices

Each cargo tank or group of cargo tanks connected to a common venting pipe shall be fitted with devices to prevent unacceptable overpressures or vacuums and constructed so as to prevent any accumulation of water and penetration of water into the cargo tank.

4 Cargo piping system

4.1 General

4.1.1 The requirements [4.1.2], [4.1.4], [4.2.2], [4.2.5] and [4.4.1] do not apply unless the substance carried has corrosive properties.

4.1.2 Pumps and accessory loading and unloading piping shall be placed in an area between the fore vertical plane and the aft vertical plane bounding the part of the cargo area below deck.

4.1.3 Cargo pumps shall be capable of being shut down from the area described in [4.1.2] and from a position outside this area.

4.1.4 Cargo pumps situated on deck shall be located not less than 6,00 m from entrances to, or openings of, the accommodation and service spaces outside any hazardous area comparable to zone 0 or 1.

4.2 Arrangement of cargo piping

4.2.1 Piping for loading and unloading shall be independent of any other piping of the vessel.

4.2.2 No cargo piping shall be located below deck, except those inside the cargo tanks and inside the cargo pump room.

4.2.3 The piping for loading and unloading shall be arranged so that, after loading or unloading operations, the liquid remaining in these pipes may be safely removed and may flow either into the vessel's tanks or the tanks ashore.

4.2.4 Piping for loading and unloading shall be clearly distinguishable from other piping, e.g. by means of colour marking.

4.2.5 The shore connections shall be located not less than 6,00 m from the entrances to or openings of, the accommodation and service spaces outside any hazardous area comparable to zone 0 or 1.

4.2.6 Each shore connection of the venting pipe and shore connections of the pipes for loading and unloading, through which the loading or unloading operation is carried out, shall be fitted with a shut-off device.

4.2.7 Piping for loading and unloading, and venting pipes, shall not have flexible connections fitted with sliding seals.

4.2.8 If the vessel is carrying several dangerous substances liable to react dangerously with each other, a separate pump with its own piping for loading and unloading shall be installed for each substance. The piping shall not pass through a cargo tank containing dangerous substances with which the substance in question is liable to react.

4.3 Control and monitoring

4.3.1 Stop valves

The stop valves or other shut-off devices of the pipes for loading and unloading shall indicate whether they are open or shut.

4.4 Supply of cargo tanks with washing or ballast water

4.4.1 When pipes for loading and unloading are used for supplying the cargo tanks with washing or ballast water, the suctions of these pipes shall be located within the cargo area but outside the cargo tanks.

Pumps for tank washing systems with associated connections may be located outside the cargo area, provided the discharge side of the system is arranged in such a way that suction is not possible through that part.

4.4.2 A non-return valve shall be fitted at the junction between the water suction pipe and the cargo loading pipe.

5 Cargo temperature control

5.1 Cargo tank heating

5.1.1 Cargo tank heating system is to be installed as a separate system, equipped with a heat exchanger located in the cargo area. Where special heat transfer media are used this requirement may be dispensed with upon approval by the Society.

5.1.2 Boilers which are used for heating the cargo shall be fuelled with a liquid fuel having a flashpoint of more than 55°C. They shall be placed either in the engine room or in another separate space below deck and outside the cargo area, which is accessible from the deck or from the engine room.

5.1.3 The cargo heating system shall be designed so that the cargo cannot penetrate into the boiler in the case of a leak in the heating coils. A cargo heating system with artificial draught shall be ignited electrically.

5.1.4 The ventilation system of the engine room shall be designed taking into account the air required for the boiler.

6 Residual cargo tanks and receptacles for residual products

6.1 General

6.1.1 Tanks for residual products shall be equipped with:

In the case of an open system:

- an ullage opening
- a device for ensuring pressure equilibrium
- connections, with stop valves, for pipes and hoses

In the case of an open system with flame arrester:

- an ullage opening
- connections, with stop valves, for pipes and hose assemblies
- a device for ensuring pressure equilibrium, fitted with a flame arrester capable of withstanding steady burning.

In the case of a closed system:

a) A level indicator
   - connections, with stop valves, for pipes and hose assemblies
   - a vacuum valve and a pressure relief valve

   The pressure relief valve shall be sized so that, during the transport operation, it does not open when in normal operation. This condition is met when the opening pressure of the valve meets the conditions required in column (10) of Ch 3, App 3, Tab 2 for the substance to be carried.

b) If the list of substances on the vessel according to Ch 3, Sec 1, [4.3.2] is going to include substances that require explosion protection in accordance with column (17) of Ch 3, App 3, Tab 2, then the pressure relief valve shall be a high velocity vent valve and the vacuum valve shall be deflagration safe. The deflagration safety may also be ensured by a flame arrester.

The high velocity vent valve and the deflagration safe vacuum valve shall be chosen according to the explosion groups/subgroups of the substances listed in the list of substances on the vessel (see column (16) of Ch 3, App 3, Tab 2).

7 Electrical installations

7.1 Type and location of electrical equipment

7.1.1 Electrical installations and equipment shall be of at least the "limited explosion risk" type.

This provision does not apply to:

a) Lighting installations in the accommodation and the wheelhouse, except for switches near to the entrances

b) Mobile phones, fixed telephone installations, stationary and portable computers and loading instruments in the accommodation or the wheelhouse

c) Electrical installations and equipment which, during a stay in the immediate vicinity of or within a shoreside assigned zone:

   1) are extinguished; or

   2) are placed in premises equipped with a ventilation system according to [2.5]

d) Radiotelephone installations and inland AIS (automatic identification systems) stations in the accommodation and the wheelhouse, if no part of an aerial for radiotelephone installations or AIS stations is situated above or within 2,00 m of the cargo area.

7.1.2 In the cofferdams, double-hull spaces, double bottoms and hold spaces, only hermetically sealed echo sounding devices are allowed, the cables of which are led through thick-walled steel tubes with gastight connections up to the main deck.

7.1.3 The fixed electrical installations and equipment which do not meet the requirements set out in [7.1.1] and their switches shall be marked in red. The disconnection of such equipment shall be controlled from a centralized location on board.

7.1.4 Every insulated distribution network shall be fitted with an automatic device with a visual and audible alarm for checking the insulation level.

7.1.5 Only distribution systems without return connection to the hull are permitted. This provision does not apply to:

- Active cathodic corrosion protection
- Certain limited sections of the installations situated outside the cargo area (e.g., connections of starters of diesel engines)
- The device for checking the insulation level referred to in [7.1.4].

7.1.6 An electric generator which is permanently driven by an engine and which does not meet the requirements of [7.1.1], shall be fitted with a switch capable of shutting down the generator. A notice board with the operating instructions shall be displayed near the switch.

7.1.7 Failure of the power supply for the safety and control equipment shall be immediately indicated by visual and audible signals in the wheelhouse and on the deck. The alarm must be relayed to the accommodation automatically if it has not been switched off.

7.1.8 Electrical switches, sockets and cables on deck shall be protected against mechanical damage.

7.1.9 Sockets for the connection of signal lights and gangway lighting shall be solidly fitted to the vessel close to the signal mast or the gangway. The sockets used in this area shall be designed so as to prevent connection or disconnection except when they are not live.

7.1.10 Vessels are only required to meet the requirements of [7.1.1] and [7.1.2], if the vessel remains in the immediate vicinity of or within a shoreside assigned zone.

7.2 Type and location of electrical and non-electrical installations and equipment intended to be used in explosion hazardous areas

7.2.1 On board vessels covered by the classification of zones as defined in Ch 3, App 1, Tab 1, electrical and non-electrical installations and equipment used in explosion hazardous areas shall meet at least the requirements for use in the area concerned.

They shall be selected on the basis of the explosion groups/subgroups and temperature classes to which the substances to be carried belong (see columns (15) and (16) of Ch 3, App 3, Tab 2).

If the list of substances on the vessel according to Ch 3, Sec 1, [4.3.2] is going to include substances for which temperature classes T4, T5 or T6 are indicated in column (15) of Ch 3, App 3, Tab 2, then the corresponding surface temperatures within the assigned zones shall not exceed 135°C (T4), 100° (T5) or 85°C (T6).

If the list of substances on the vessel according to Ch 3, Sec 1, [4.3.2] is going to include substances for which temperature classes T1 or T2 are indicated in column (15) of Ch 3, App 3, Tab 2, then the corresponding surface temperatures within the assigned zones shall not exceed 200°C.

7.2.2 Except in the case of optical fibres, electrical cables shall be armoured or placed in a metallic sheath or in protective tubes.

Electrical cables for the active cathodic protection of the shell plating shall be led through thick-walled steel tubes with gastight connections up to the main deck.

7.2.3 Movable electric cables are prohibited in the explosion danger area, except for electric cables for intrinsically safe electric circuits or for connecting:

- Signal lights and lighting for gangways, provided the connection point (for example, the socket) is permanently fitted to the vessel close to the signal mast or gangway
- The power network on a vessel to a land-based power network; provided
  - The electric cables and the power supply unit conform with a valid standard
  - The power supply unit and connectors are located outside of the explosion danger area.

Connecting and disconnecting sockets/connectors shall only be possible when they are not live.

7.2.4 Electrical cables of intrinsically safe circuits shall be separated from other cables not intended for use in such circuits and shall be marked (they shall not be installed together in the same string of cables and they shall not be fixed by the same cable clamps).

7.2.5 For movable electrical cables permitted under, only sheathed cables of type H07RN-F in accordance with standard IEC 60245-4:2011 or electrical cables of at least equivalent design having conductors with a cross-section of not less than 1.50 mm^2 shall be used.

7.3 Earthing

7.3.1 The metal parts of electrical appliances in the cargo area which are not live as well as protective metal tubes or metal sheaths of cables in normal service shall be earthed, unless they are so arranged that they are automatically earthed by bonding to the metal structure of the vessel.

7.3.2 The provisions of [7.3.1] apply also to equipment having service voltages of less than 50 V.

7.3.3 Independent cargo tanks, metal intermediate bulk containers and tank-containers shall be earthed.

7.3.4 Receptacles for residual products shall be capable of being earthed.

7.4 Storage batteries

7.4.1 Storage batteries shall be located outside any hazardous area comparable to zone 0 or 1.

8 Fire protection and fire extinction

8.1 Fire and naked light

8.1.1 The outlets of funnels shall be located not less than 2,00 m from the cargo area. Arrangements shall be provided to prevent the escape of sparks and the entry of water.

8.1.2 Heating, cooking and refrigerating appliances shall not be fuelled with liquid fuels, liquid gas or solid fuels.

The installation in the engine room or in another separate space of heating appliances fuelled with liquid fuel having a flash-point above 55°C is, however, permitted.

Cooking and refrigerating appliances are permitted only in the accommodation.

8.1.3 Only electrical lamps are permitted.

8.2 Portable fire extinguishers

8.2.1 In addition to the fire-extinguishing appliances prescribed in Pt C, Ch 4, Sec 4, [2], the vessel shall be equipped with at least two additional portable fire-extinguishers having the same capacity in cargo area.

These additional portable fire-extinguishers shall be suitable for fighting fires involving the dangerous goods carried.

9 Safety and control installations

9.1 General

9.1.1 Cargo tanks shall be provided with the following equipment:

a) a mark inside the tank indicating the liquid level of 97%

b) a high level sensor for actuating the facility against overflowing at the latest when a degree of filling of 97,5% is reached

c) An instrument for measuring the temperature of the cargo shall be provided, if in column (9) of Ch 3, App 3, Tab 2 a cargo heating installation is required, or if a possibility of heating the cargo is required on board, or if a maximum temperature is indicated in column (20).

10 Buoyancy and stability

10.1 General

10.1.1 Exceptions to the requirements stated in these Rules are possible where they are permitted by the statutory Regulations.

10.1.2 General requirements of Pt B, Ch 2, Sec 2, [1] to Pt B, Ch 2, Sec 2, [3] are to be complied with.

10.1.3 The longitudinal centre bulkhead may be dispensed with only if sufficient stability is guaranteed.

10.1.4 Proof of sufficient stability shall be furnished. This proof is not required for single hull vessels with cargo tanks the width of which is not more than 0,70 B.

10.1.5 The basic values for the stability calculation (the vessel's lightweight and location of the centre of gravity) shall be determined in compliance with Pt B, Ch 2, Sec 2, [2.2].

10.1.6 Proof of sufficient intact stability shall be furnished for all stages of loading and unloading and for the final loading condition for all the relative densities of the substances transported contained in the vessel substance list according to Ch 3, Sec 1, [4.3.2].

10.1.7 For every loading case, taking account of the actual fillings and floating position of cargo tanks, ballast tanks and compartments, drinking water and sewage tanks and tanks containing products for the operation of the vessel, the vessel shall comply with the intact and damage stability requirements.

Intermediate stages during operations shall also be taken into consideration.

10.2 Intact stability

10.2.1 For vessels with independent cargo tanks and for double hull constructions with cargo tanks integrated in the frames of the vessel, the requirements for intact stability resulting from the damage stability calculation shall be fully complied with.

10.2.2 For vessels with cargo tanks of more than 0,70 B in width, the following intact stability requirements are to be complied with, bearing in mind the influence of all free surfaces in tanks for all stages of loading and unloading:

- in the positive area of the righting lever curve up to immersion of the first unprotected opening there shall be a righting lever (GZ) of not less than 0,10 m
- the surface of the positive area of the righting lever curve up to immersion of the first unprotected opening and in any event up to an angle of heel ≤ 27° shall not be less than 0,024 m.rad
- the initial metacentric height GM_0 shall be not less than 0,10 m.

10.3 Damage stability

10.3.1 For vessels with independent cargo tanks and for double hull constructions with cargo tanks integrated in the frames of the vessel, the following assumptions shall be taken into consideration for the damaged condition:

a) Extent of side damage:
   - longitudinal extent: at least 0,10 L_{OA} but not less than 5,00 m
   - transverse extent: B_2 – 0,01 m
   - vertical extent: from base line upwards without limit

b) Extent of bottom damage:
   - longitudinal extent: at least 0,10 L_{OA} but not less than 5,00 m
   - transverse extent: 3,00 m
   - vertical extent: from base line to D_2 – 0,01 m upwards, except for pump well

c) Any bulkhead within the damaged area shall be assumed damaged, which means that the location of bulkheads shall be chosen to ensure that the vessel remains afloat after the flooding of two or more adjacent compartments in the longitudinal direction.

   The following provisions are applicable:
   - for bottom damage, adjacent athwartship compartments shall also be assumed flooded
   - the lower edge of any non-watertight opening (e.g. windows, doors and access hatchways) shall, at the final stage of flooding, be not less than 0,10 m above the damage waterline.

10.3.2 In general, permeability shall be assumed to be 95%. Where an average permeability of less than 95% is calculated for any compartment, this calculated value obtained may be used.

However, the minimum values of permeability μ given in Tab 2 are to be used.

For the main engine room, only the one-compartment status need be taken into account, i.e. the end bulkheads of the engine room shall be assumed as not damaged.

Table 2 : Permeability μ

Spaces	μ, in %
Engine room	85
Accommodation spaces	95
Double bottoms, oil fuel tanks, ballast tanks, etc., depending on whether, according to their function, they have to be assumed as full or empty for the vessel floating at the maximum permissible draught	0 or 95

10.3.3 The damage stability is generally regarded sufficient if (see Fig 1):

- At the stage of equilibrium (in the final stage of flooding), the angle of heel is not greater than 12°.

  Non-watertight openings shall not be flooded before reaching the stage of equilibrium. If such openings are immersed before the stage of equilibrium, the corresponding spaces shall be considered flooded for the purpose of stability calculation.
- The positive range of the righting lever curve beyond the stage of equilibrium has a righting lever of ≥ 0,05 m in association with an area under the curve of ≥ 0,0065 m.rad. The minimum values of stability shall be satisfied up to immersion of the first unprotected (non-weathertight) opening and in any event up to an angle of heel ≤ 27°. If non-weathertight openings are immersed before that stage, the corresponding spaces shall be considered flooded for the purpose of stability calculation.

10.3.4 If openings through which undamaged compartments may additionally become flooded are capable of being closed watertight, the closing appliances shall be marked accordingly.

10.3.5 Where cross- or down-flooding openings are provided for reduction of unsymmetrical flooding, the time of equalisation shall not exceed 15 minutes, provided during the intermediate stages of flooding sufficient stability has been proved.

Figure 1 : Proof of damage stability

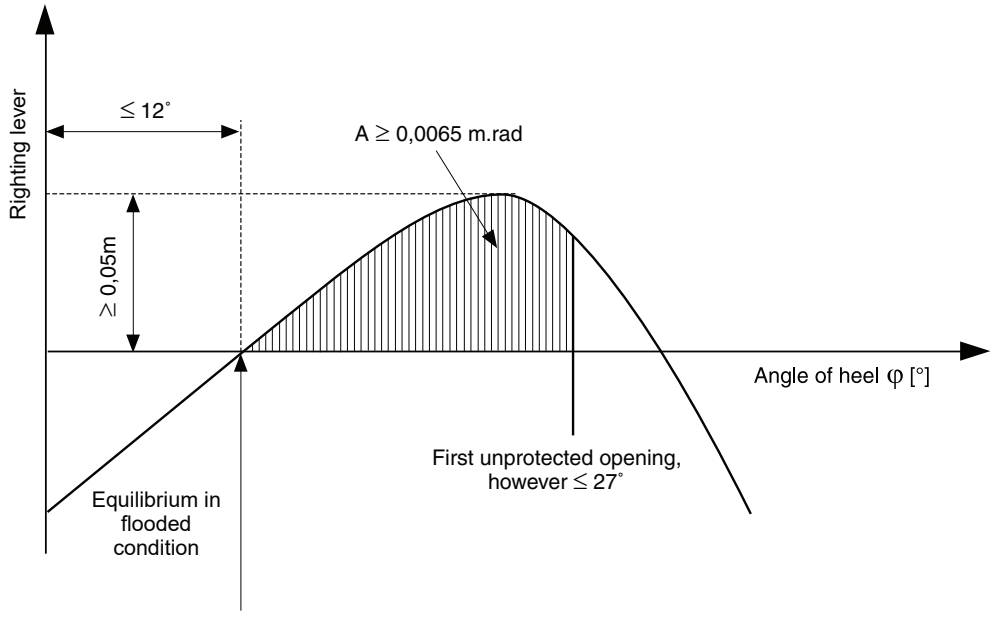

SECTION 6 SUPPLY VESSEL

Symbols

L_{OA} : Length overall, in m, defined in Pt B, Ch 1, Sec 2, [2.5]

B : Breadth, in m, defined in Pt B, Ch 1, Sec 2, [2.2]

B_2 : Breadth of the side tank, in m

D_2 : Height of the double bottom, in m.

1 General

1.1 Application

1.1.1 Vessels complying with the requirements of this Section are eligible for the assignment of the additional service feature **Supply vessel** as defined in Pt A, Ch 1, Sec 3, [3.2.19].

1.2 Documents to be submitted

1.2.1 Tab 1 lists the plans and documents to be submitted in addition to the documents required in the other Parts of the Rules for the parts of the vessel not affected by the cargo, as applicable.

2 Vessel arrangement

2.1 Protection against penetration of gases

2.1.1 The vessel shall be designed so as to prevent dangerous gases and liquids from penetrating into the accommodation, wheelhouse and the service spaces. None of the windows in these spaces shall be capable of being opened unless its intended use is as an emergency exit and it is marked as such.

2.1.2 The requirement [2.1.1] is to be met only if the vessel remains in the immediate vicinity of or within a shoreside assigned zone.

2.2 Engine rooms

2.2.1 Internal combustion engines for the vessel's propulsion as well as internal combustion engines for auxiliary machinery shall be located outside the cargo area. Entrances and other openings of engine rooms shall be at a distance of not less than 2,00 m from any hazardous area comparable to zone 0 or 1.

2.2.2 The engine rooms shall be accessible from the deck; the entrances shall not face the cargo area.

2.3 Accommodation and service spaces

2.3.1 Accommodation spaces and the wheelhouse shall be located outside the cargo area forward of the fore vertical plane or abaft the aft vertical plane bounding the part of cargo area below deck. Windows of the wheelhouse which are located not less than 1,00 m above the bottom of the wheelhouse may tilt forward.

2.3.2 Entrances to spaces and openings of superstructures shall not face the cargo area.

2.3.3 Entrances from the deck and openings of spaces facing the weather shall be capable of being closed.

2.3.4

a) Driving shafts of the bilge or ballast pumps in the cargo area may penetrate through the bulkhead between the service space and the engine room, provided the arrangement of the service space is in compliance with [2.4.6].

b) The penetration of the shaft through the bulkhead shall be gastight and shall have been approved by the Society.

c) Penetrations through the bulkhead between the engine room and the service space in the cargo area, and the bulkhead between the engine room and the hold spaces may be provided for electrical cables, hydraulic and piping for measuring, control and alarm systems, provided that the penetrations have been approved by the Society. The penetrations shall be gastight. Penetrations through a bulkhead with an "A-60" fire protection insulation (see Pt C, Ch 4, Sec 1, [2.2]), shall have an equivalent fire protection.

d) Pipes may penetrate the bulkhead between the engine room and the service space in the cargo area provided that these are pipes between the mechanical equipment in the engine room and the service space which do not have any openings within the service space and which are provided with shut-off devices at the bulkhead in the engine room.

e) Notwithstanding [2.4.4], pipes from the engine room may penetrate the service space in the cargo area or a cofferdam or a hold space or a double-hull space to the outside provided that within the service space or cofferdam or hold space or doublehull space they are of the thick-walled type and have no flanges or openings.

Table 1 : Documents to be submitted

No.	A/I	Document
1	I	List of substances intended to be carried with their UN number (see Ch 3, App 3, Tab 2), including all design characteristics of substances and other important design conditions
2	I	General arrangement plan, showing location of cargo tanks and fuel oil, ballast and other tanks, void spaces
3	A	Hazardous areas plan and location of the electrical equipment installed in these areas
4	A	Ventilation duct arrangement in gas-dangerous spaces and adjacent zones
5	A	Details of hull structure in way of cargo tanks, including support arrangement for tanks, saddles, anti-floating and anti-lifting devices, deck sealing arrangements, independent cargo tanks, etc.
6	A	Intact and damage stability calculations
7	A	Scantlings, material and arrangement of the cargo containment system
8	A	Details of cargo handling system, including arrangements and details of piping and fittings
9	A	Details of cargo pumps
10	A	Bilge and ballast system in cargo area
11	A	Gas freeing system in cargo tanks
12	A	Ventilation system in cargo area
13	A	List of the electrical equipment installed in hazardous areas comparable to zone 0 and 1, including the following equipment particulars: location, type of protection, type of protection against explosion, testing body and approval number
14	A	Schematic electrical wiring diagram
15	A	Pressure drop calculation note
16	A	Gas detection system
17	A	Cargo tank instrumentation
18	A	Details of fire-extinguishing appliances and systems in cargo area
19	A	Arrangement drawing of the various fire bulkheads and decks with standard fire test reports for the various arrangements, surface coverings, paints and similar
20	I	Loading and unloading operation description, including cargo tank filling limits, where applicable
21	A	Gas return system
22	A	List of equipment installed in hazardous areas comparable to zone 2 which may be used during loading, unloading and gas-freeing and red equipment

Note 1:
A = to be submitted for review
I = to be submitted for information.

2.3.5 A service space located within the cargo area below deck shall not be used as a cargo pump room for the loading and unloading system, except where the cargo pump room is provided with a permanent oxygen detection system which automatically indicates the amount of oxygen and which actuates a visual and audible alarm when the oxygen concentration has reached 19.5% by volume.

The sensors of this system shall be placed at suitable positions at the bottom and at a height of 2,00 m. Measurement shall be continuous and displayed near to the entrance. Audible and visual alarms shall be installed in the wheelhouse and in the cargo pump-room and, when the alarm is actuated, the loading and unloading system shall be shut down.

Failure of the oxygen measuring system shall activate a visual and audible alarm in the wheelhouse and on deck. The alarm must be relayed to the accommodation automatically if it has not been switched off.

2.4 Hold spaces

2.4.1 The cargo tanks shall be separated by cofferdams of at least 0,60 m in width from the accommodation, engine room and service spaces outside the cargo area below deck or, if there are no such accommodation, engine room and service spaces, from the vessel's ends. Where the cargo tanks are installed in a hold space, a space of not less than 0,50 m shall be provided between such tanks and the end bulkheads of the hold space. In this case an end bulkhead meeting at least the definition for Class "A-60" (see Pt C, Ch 4, Sec 1, [2.2]), shall be deemed equivalent to a cofferdam. For pressure cargo tanks, the 0,50 m distance may be reduced to 0,20 m.

2.4.2 Hold spaces, cofferdams and cargo tanks shall be capable of being inspected.

2.4.3 All spaces in the cargo area shall be capable of being ventilated. Means for checking their gas-free condition shall be provided.

2.4.4 The bulkheads bounding the cargo tanks, cofferdams and hold spaces shall be watertight. The cargo tanks and the bulkheads bounding the cargo area shall have no openings or penetrations below deck.

The bulkhead between the engine room and the cofferdam or service space in the cargo area or between the engine room and a hold space may be fitted with penetrations provided that they conform to the provisions of [2.3.4].

The bulkheads between the cargo tanks may be fitted with penetrations provided that the loading and unloading pipes are fitted with shut-off devices in the cargo tank from which they come. The shut-off devices shall be operable from the deck.

These pipes shall be at least 0,60 m above the bottom.

2.4.5 Double hull spaces and double bottoms in the cargo area shall be arranged for being filled with ballast water only. Double bottoms may, however, be used as fuel oil tanks, provided they comply with [2.7].

2.4.6

a) A cofferdam, the centre part of a cofferdam or another space below deck in the cargo area may be arranged as a service space, provided the bulkheads bounding the service space extend vertically to the bottom. This service space shall only be accessible from the deck.

b) The service space shall be watertight with the exception of its access hatches and ventilation inlets.

2.4.7 Where service spaces are located in the cargo area under deck, they shall be arranged so as to be easily accessible and to permit persons wearing protective clothing and breathing apparatus to safely operate the service equipment contained therein. They shall be designed so as to allow injured or unconscious personnel to be removed from such spaces without difficulty, if necessary by means of fixed equipment.

2.4.8 Cofferdams, double-hull spaces, double bottoms, cargo tanks, hold spaces and other accessible spaces within the cargo area shall be arranged so that they may be completely inspected and cleaned in an appropriate manner. The dimensions of openings, except for those of double hull spaces and double bottoms which do not have a wall adjoining the cargo tanks, shall be in compliance with Pt B, Ch 2, Sec 1, [3.2.2].

2.5 Ventilation

2.5.1 Each hold space shall have two openings the dimensions and location of which shall be such as to permit effective ventilation of any part of the hold space.

2.5.2 Double-hull spaces and double bottoms within the cargo area which are not arranged for being filled with ballast water, hold spaces and cofferdams, shall be provided with ventilation systems.

2.5.3 Any service spaces located in the cargo area below deck shall be provided with a suitable ventilation installation.

2.5.4 Ventilation of accommodation and service spaces shall be possible.

2.6 Engines

2.6.1 Only internal combustion engines running on fuel having a flash point above 55°C are allowed. This provision does not apply to internal combustion engines which are part of propulsion and auxiliary systems fitted onboard vessels assigned one of the additional service features **Dualfuel** or **Gasfuel** according to Pt A, Ch 1, Sec 3, [1.3.5].

2.7 Oil fuel tanks

2.7.1 When the vessel is provided with hold spaces, the double bottoms within these spaces may be arranged as oil fuel tanks, provided their depth is not less than 0,60 m.

Oil fuel pipes and openings of such tanks are not permitted in the hold space.

2.7.2 The open ends of the air pipes of all liquid oil fuel tanks shall extend to not less than 0,5 m above the open deck. Their open ends and the open ends of overflow pipes leading on the deck shall be fitted with a protective device consisting of a gauze diaphragm or a perforated plate.

2.8 Exhaust pipes

2.8.1 Exhausts shall be evacuated from the vessel into the open air either upwards through an exhaust pipe or through the shell plating. The exhaust pipes of engines shall be arranged so that the exhausts are led away from the vessel. The exhaust pipes shall not be located within any hazardous area comparable to zone 0 or 1.

2.8.2 Exhaust pipes shall be provided with a device preventing the escape of sparks, e.g. spark arresters.

2.9 Bilge pumping and ballasting arrangements

2.9.1 Bilge and ballast pumps for spaces within the cargo area shall be installed within such area.

This provision does not apply to:

- double-hull spaces and double bottoms which do not have a common boundary wall with the cargo tanks
- cofferdams, double hull spaces, double bottoms and hold spaces where ballasting is carried out using the piping of the firefighting system in the cargo area and bilge-pumping is performed using eductors which are installed in the cargo area.

2.9.2 Where the double bottom is used as oil fuel tank, it shall not be connected to the bilge piping system.

2.9.3 Where the ballast pump is installed in the cargo area, the standpipe and its outboard connection for suction of ballast water shall be located within the cargo area but outside the cargo tanks.

2.9.4 A cargo pump-room below deck shall be capable of being drained in an emergency by an installation located in the cargo area and independent from any other installation. This installation shall be provided outside the cargo pump-room.

2.10 Ventilation of cargo pump rooms

2.10.1 Cargo pump rooms must be provided with extraction type ventilation systems, independent of other vessel's spaces, providing at least 30 cycles of air change per hour. Warning notices shall be placed requiring that the ventilation is in operation for at least 15 minutes prior to entering these spaces.

2.10.2 Portable means must be provided for gas-freeing of cargo tanks and other spaces not equipped with fixed ventilation.

2.11 Arrangements of cofferdams

2.11.1 Cofferdams or cofferdam compartments remaining once a service space has been arranged in accordance with [2.4.6] shall be accessible through an access hatch. If, however, the cofferdam is connected to a double hull space, it is sufficient for it to be accessible from that space.

2.11.2 No fixed pipe shall permit connection between a cofferdam and other piping of the vessel outside the cargo area.

2.11.3 If the list of substances on the vessel according to Ch 3, Sec 1, [4.3.2] is going to include substances that require explosion protection in accordance with column (17) of Ch 3, App 3, Tab 2, then the ventilation openings of cofferdams shall be fitted with a flame arrester capable of withstanding a deflagration. The flame arresters shall be chosen according to the explosion groups/subgroups of the substances foreseen for inclusion in the list of substances on the vessel (see column (16) of Ch 3, App 3, Tab 2).

3 Cargo containment

3.1 General

3.1.1 The scantlings and structural arrangements are to be in compliance with applicable requirements of Ch 1, Sec 3, [6] to Ch 1, Sec 3, [11].

3.2 Cargo area hull design

3.2.1 Where independent cargo tanks are used, or for double-hull construction where the cargo tanks are integrated in vessel's structure, the space between the wall of the vessel and wall of the cargo tanks shall be not less than 0,60 m.

The space between the bottom of the vessel and the bottom of the cargo tanks shall be not less than 0,50 m. The space may be reduced to 0,40 m under the pump sumps. The vertical space between the suction well of a cargo tank and the bottom structures shall be not less than 0,10 m.

When a hull is constructed in the cargo area as a double hull with independent cargo tanks located in hold spaces, the above values are applicable to the double hull. If in this case the minimum values for inspections of independent tanks referred to in [2.4.8] are not feasible, it must be possible to remove the cargo tanks easily for inspection.

3.2.2 Where service spaces are located in the cargo area under deck, they shall be arranged so as to be easily accessible and to permit persons wearing protective clothing and breathing apparatus to safely operate the service equipment contained therein. They shall be designed so as to allow injured or unconscious personnel to be removed from such spaces without difficulties, if necessary by means of fixed equipment.

3.3 Cargo tank arrangements

3.3.1 The cargo tank is to comply with the following:

- for vessels with a length not more than 50,00 m, the length of a cargo tank shall not exceed 10,00 m
- for vessels with a length of more than 50,00 m, the length of a cargo tank shall not exceed 0,20 L, where L is the vessel rule length. This provision does not apply to vessels with independent built-in cylindrical tanks having a length to diameter ratio ≤ 7.

3.3.2 The capacity of a suction well shall be limited to not more than 0,1 m^3.

3.4 Integrated tank scantlings

3.4.1 The scantlings of the integrated tank structure are to be determined in compliance with Ch 1, Sec 3.

3.5 Independent cargo tank scantlings

3.5.1 Cargo tank scantlings

The scantlings of independent cargo tanks are to be determined in compliance with Ch 1, Sec 3, [6.1.2].

3.5.2 Supports and fastenings

The scantlings of the tank supports and fastenings are to be in compliance with Ch 1, Sec 3, [9].

3.6 Cargo tank openings

3.6.1

a) Cargo tank openings shall be located on deck in the cargo area.

b) Cargo tank openings with a cross-section of more than 0,10 m^2 and openings of safety devices for preventing overpressures shall be located not less than 0,50 m above deck.

3.6.2 Safety devices

Each cargo tank or group of cargo tanks connected to a common venting pipe shall be fitted with devices to prevent unacceptable overpressures or vacuums and constructed so as to prevent any accumulation of water and penetration of water into the cargo tank.

4 Cargo piping system

4.1 Arrangement for cargo pumps

4.1.1 The requirements [4.1.2], [4.1.4], [4.2.2], [4.2.5] and [4.4.1] do not apply unless the substance carried has corrosive properties.

4.1.2 Pumps and accessory loading and unloading piping shall be placed in an area between the fore vertical plane and the aft vertical plane bounding the part of the cargo area below deck.

4.1.3 Cargo pumps shall be capable of being shut down from the area described in [4.1.2] and from a position outside this area.

4.1.4 Cargo pumps situated on deck shall be located not less than 6,00 m from entrances to, or openings of, the accommodation and service spaces outside any hazardous area comparable to zone 0 or 1.

4.2 Arrangement of cargo piping

4.2.1 Pipes for loading and unloading shall be independent of any other piping of the vessel.

4.2.2 The pipes for loading and unloading shall be arranged so that, after loading or unloading operations, the liquid remaining in these pipes may be safely removed and may flow either into the vessel's tanks or the tanks ashore.

4.2.3 Piping for loading and unloading shall be clearly distinguishable from other piping, e.g. by means of colour marking.

4.2.4 The shore connections shall be located not less than 6 m from the entrances to or openings of, the accommodation and service spaces outside the cargo area.

4.2.5 Each shore connection of the venting pipe and shore connections of the pipes for loading and unloading, through which the loading or unloading operation is carried out, shall be fitted with a shut-off device.

4.3 Control and monitoring

4.3.1 Stop valves

The stop valves or other shut-off devices of the pipes for loading and unloading shall indicate whether they are open or shut.

4.4 Supply of cargo tanks with washing or ballast water

4.4.1 When pipes for loading and unloading are used for supplying the cargo tanks with washing or ballast water, the suctions of these pipes shall be located within the cargo area but outside the cargo tanks.

Pumps for tank washing systems with associated connections may be located outside the cargo area, provided the discharge side of the system is arranged in such a way that suction is not possible through that part.

4.4.2 A non-return valve shall be fitted at the junction between the water suction pipe and the cargo loading pipe.

4.5 Permissible loading and unloading flows

4.5.1 The permissible loading and unloading flows shall be calculated. For open type N with flame-arrester and open type N the loading and unloading flows depend on the total cross section of the exhaust ducts.

4.5.2 Calculations concern the permissible maximum loading and unloading flow for each cargo tank or each group of cargo tanks, taking into account the design of the ventilation system. These calculations shall take into consideration the fact that in the event of an unforeseen cut-off of the gas return piping or the compensation piping of the shore facility, the safety devices of the cargo tanks will prevent pressure in the cargo tanks from exceeding the following values:

- over-pressure: 115% of the opening pressure of the high-velocity vent valve
- vacuum pressure: not more than the construction vacuum pressure but not exceeding 5 kPa.

5 Cargo temperature control

5.1 Cargo tank heating

5.1.1 Cargo tank heating system is to be installed as a separate system, equipped with a heat exchanger located in the cargo area. Where special heat transfer media are used this requirement may be dispensed with upon approval by the Society.

5.1.2 Boilers which are used for heating the cargo shall be fuelled with a liquid fuel having a flashpoint of more than 55°C. They shall be placed either in the engine room or in another separate space below deck and outside the cargo area, which is accessible from the deck or from the engine room.

5.1.3 The cargo heating system shall be designed so that the cargo cannot penetrate into the boiler in the case of a leak in the heating coils. A cargo heating system with artificial draught shall be ignited electrically.

5.1.4 The ventilation system of the engine room shall be designed taking into account the air required for the boiler.

6 Residual cargo tanks and receptacles for residual products

6.1 General

6.1.1 When vessels are provided with tanks for residual products or receptacles for residual products, they shall be located in the cargo area and comply with the provisions of [6.1.2] and [6.1.3]. Receptacles for residual products shall be located only in the cargo area on deck and not less than a quarter of the vessel's breadth from the outer shell.

6.1.2 Tanks for residual products shall be equipped with:

In the case of an open system:

- an ullage opening
- a device for ensuring pressure equilibrium
- connections, with stop valves, for pipes and hoses

In the case of an open system with flame arrester:

- an ullage opening
- connections, with stop valves, for pipes and hose assemblies
- a device for ensuring pressure equilibrium, fitted with a flame arrester capable of withstanding steady burning.

In the case of a closed system:

a) A level indicator
   - connections, with stop valves, for pipes and hose assemblies
   - a vacuum valve and a pressure relief valve

   The pressure relief valve shall be sized so that, during the transport operation, it does not open when in normal operation. This condition is met when the opening pressure of the valve meets the conditions required in column (10) of Ch 3, App 3, Tab 2 for the substance to be carried.

b) If the list of substances on the vessel according to Ch 3, Sec 1, [4.3.2] is going to include substances that require explosion protection in accordance with column (17) of Ch 3, App 3, Tab 2, then the pressure relief valve shall be a high velocity vent valve and the vacuum valve shall be deflagration safe. The deflagration safety may also be ensured by a flame arrester.

   The high velocity vent valve and the deflagration safe vacuum valve shall be chosen according to the explosion groups/subgroups of the substances listed in the list of substances on the vessel (see column (16) of Ch 3, App 3, Tab 2).

The maximum permissible capacity is 30 m^3.

6.1.3 Receptacles for residual products shall be equipped with:

- a possibility of indicating the degree of filling
- connections, with stop valves, for pipes and hose assemblies
- a connection enabling gases released during filling to be evacuated safely

7 Electrical installations

7.1 Type and location of electrical equipment

7.1.1 Electrical installations and equipment shall be of at least the "limited explosion risk" type.

This provision does not apply to:

a) Lighting installations in the accommodation and the wheelhouse, except for switches near to the entrances

b) Mobile phones, fixed telephone installations, stationary and portable computers and loading instruments in the accommodation or the wheelhouse

c) Electrical installations and equipment which, during a stay in the immediate vicinity of or within a shoreside assigned zone:

   1) are extinguished; or

   2) are placed in premises equipped with a ventilation system according to [2.5]

d) Radiotelephone installations and inland AIS (automatic identification systems) stations in the accommodation and the wheelhouse, if no part of an aerial for radiotelephone installations or AIS stations is situated above or within 2,00 m of the cargo area.

7.1.2 In the cofferdams, double-hull spaces, double bottoms and hold spaces, only hermetically sealed echo sounding devices are allowed, the cables of which are led through thick-walled steel tubes with gastight connections up to the main deck.

7.1.3 The fixed electrical installations and equipment which do not meet the requirements set out in [7.1.1] and their switches shall be marked in red. The disconnection of such equipment shall be controlled from a centralized location on board.

7.1.4 Every insulated distribution network shall be fitted with an automatic device with a visual and audible alarm for checking the insulation level.

7.1.5 Only distribution systems without return connection to the hull are permitted. This provision does not apply to:

- Active cathodic corrosion protection
- Certain limited sections of the installations situated outside the cargo area (e.g., connections of starters of diesel engines)
- The device for checking the insulation level referred to in [7.1.4].

7.1.6 An electric generator which is permanently driven by an engine and which does not meet the requirements of [7.1.1], shall be fitted with a switch capable of shutting down the generator. A notice board with the operating instructions shall be displayed near the switch.

7.1.7 Failure of the power supply for the safety and control equipment shall be immediately indicated by visual and audible signals in the wheelhouse and on the deck. The alarm must be relayed to the accommodation automatically if it has not been switched off.

7.1.8 Electrical switches, sockets and cables on deck shall be protected against mechanical damage.

7.1.9 Sockets for the connection of signal lights and gangway lighting shall be solidly fitted to the vessel close to the signal mast or the gangway. The sockets used in this area shall be designed so as to prevent connection or disconnection except when they are not live.

7.1.10 Vessels are only required to meet the requirements of [7.1.1] and [7.1.2], if the vessel remains in the immediate vicinity of or within a shoreside assigned zone.

7.2 Type and location of electrical and non-electrical installations and equipment intended to be used in explosion hazardous areas

7.2.1 On board vessels covered by the classification of zones as defined in Ch 3, App 1, Tab 1, electrical and non-electrical installations and equipment used in explosion hazardous areas shall meet at least the requirements for use in the area concerned.

They shall be selected on the basis of the explosion groups/subgroups and temperature classes to which the substances to be carried belong (see columns (15) and (16) of Ch 3, App 3, Tab 2).

If the list of substances on the vessel according to Ch 3, Sec 1, [4.3.2] is going to include substances for which temperature classes T4, T5 or T6 are indicated in column (15) of Ch 3, App 3, Tab 2, then the corresponding surface temperatures within the assigned zones shall not exceed 135°C (T4), 100° (T5) or 85°C (T6).

If the list of substances on the vessel according to Ch 3, Sec 1, [4.3.2] is going to include substances for which temperature classes T1 or T2 are indicated in column (15) of Ch 3, App 3, Tab 2, then the corresponding surface temperatures within the assigned zones shall not exceed 200°C.

7.2.2 Except in the case of optical fibres, electrical cables shall be armoured or placed in a metallic sheath or in protective tubes.

Electrical cables for the active cathodic protection of the shell plating shall be led through thick-walled steel tubes with gastight connections up to the main deck.

7.2.3 Movable electric cables are prohibited in the explosion danger area, except for electric cables for intrinsically safe electric circuits or for connecting:

- Signal lights and lighting for gangways, provided the connection point (for example, the socket) is permanently fitted to the vessel close to the signal mast or gangway
- The power network on a vessel to a land-based power network; provided
  - The electric cables and the power supply unit conform with a valid standard
  - The power supply unit and connectors are located outside of the explosion danger area.

Connecting and disconnecting sockets/connectors shall only be possible when they are not live.

7.2.4 Electrical cables of intrinsically safe circuits shall be separated from other cables not intended for use in such circuits and shall be marked (they shall not be installed together in the same string of cables and they shall not be fixed by the same cable clamps).

7.2.5 For movable electrical cables permitted under, only sheathed cables of type H07RN-F in accordance with standard IEC 60245-4:2011 or electrical cables of at least equivalent design having conductors with a cross-section of not less than 1.50 mm^2 shall be used.

7.3 Earthing

7.3.1 The metal parts of electrical appliances in the cargo area which are not live as well as protective metal tubes or metal sheaths of cables in normal service shall be earthed, unless they are so arranged that they are automatically earthed by bonding to the metal structure of the vessel.

7.3.2 The provisions of [7.3.1] apply also to equipment having service voltages of less than 50 V.

7.3.3 Independent cargo tanks, metal intermediate bulk containers and tank-containers shall be earthed.

7.3.4 Receptacles for residual products shall be capable of being earthed.

7.4 Storage batteries

7.4.1 Storage batteries shall be located outside any hazardous area comparable to zone 0 or 1.

8 Fire protection and fire extinction

8.1 Fire and naked light

8.1.1 The outlets of funnels shall be located not less than 2,00 m from any hazardous area comparable to zone 0 or 1. Arrangements shall be provided to prevent the escape of sparks and the entry of water.

8.1.2 Heating, cooking and refrigerating appliances shall not be fuelled with liquid fuels, liquid gas or solid fuels.

The installation in the engine room or in another separate space of heating appliances fuelled with liquid fuel having a flash-point above 55°C is, however, permitted.

Cooking and refrigerating appliances are permitted only in the accommodation.

8.1.3 Only electrical lamps are permitted.

8.2 Portable fire extinguishers

8.2.1 In addition to the fire-extinguishing appliances prescribed in Pt C, Ch 4, Sec 4, [2], the vessel shall be equipped with at least two additional portable fire-extinguishers having the same capacity in cargo area.

These additional portable fire-extinguishers shall be suitable for fighting fires involving the dangerous goods carried.

9 Safety and control installations

9.1 General

9.1.1 Cargo tanks shall be provided with the following equipment:

a) a mark inside the tank indicating the liquid level of 97%

b) a high level sensor for actuating the facility against overflowing at the latest when a degree of filling of 97,5% is reached.

10 Buoyancy and stability

10.1 General

10.1.1 Exceptions to the requirements stated in these Rules are possible where they are permitted by the statutory Regulations.

10.1.2 General requirements of Pt B, Ch 2, Sec 2, [1] to Pt B, Ch 2, Sec 2, [3] are to be complied with.

10.1.3 The longitudinal centre bulkhead may be dispensed with only if sufficient stability is guaranteed.

10.1.4 Proof of sufficient stability shall be furnished. This proof is not required for single hull vessels with cargo tanks the width of which is not more than 0,70 B.

10.1.5 The basic values for the stability calculation (the vessel's lightweight and location of the centre of gravity) shall be determined in compliance with Pt B, Ch 2, Sec 2, [2.2].

10.1.6 Proof of sufficient intact stability shall be furnished for all stages of loading and unloading and for the final loading condition for all the relative densities of the substances transported contained in the vessel substance list according to Ch 3, Sec 1, [4.3.2].

10.1.7 For every loading case, taking account of the actual fillings and floating position of cargo tanks, ballast tanks and compartments, drinking water and sewage tanks and tanks containing products for the operation of the vessel, the vessel shall comply with the intact and damage stability requirements.

Intermediate stages during operations shall also be taken into consideration.

10.2 Intact stability

10.2.1 For vessels with independent cargo tanks and for double hull constructions with cargo tanks integrated in the frames of the vessel, the requirements for intact stability resulting from the damage stability calculation shall be fully complied with.

10.2.2 For vessels with cargo tanks of more than 0,70 B in width, the following intact stability requirements are to be complied with, bearing in mind the influence of all free surfaces in tanks for all stages of loading and unloading:

- in the positive area of the righting lever curve up to immersion of the first unprotected opening there shall be a righting lever (GZ) of not less than 0,10 m
- the surface of the positive area of the righting lever curve up to immersion of the first unprotected opening and in any event up to an angle of heel ≤ 27° shall not be less than 0,024 m.rad
- the initial metacentric height GM_0 shall be not less than 0,10 m.

10.3 Damage stability

10.3.1 For vessels with independent cargo tanks and for double hull constructions with cargo tanks integrated in the frames of the vessel, the following assumptions shall be taken into consideration for the damaged condition:

a) Extent of side damage:
   - longitudinal extent: at least 0,10 L_{OA} but not less than 5,00 m
   - transverse extent: B_2 – 0,01 m
   - vertical extent: from base line upwards without limit

b) Extent of bottom damage:
   - longitudinal extent: at least 0,10 L_{OA} but not less than 5,00 m
   - transverse extent: 3,00 m
   - vertical extent: from base line to D_2 – 0,01 m upwards, except for pump well

c) Any bulkhead within the damaged area shall be assumed damaged, which means that the location of bulkheads shall be chosen to ensure that the vessel remains afloat after the flooding of two or more adjacent compartments in the longitudinal direction.

   The following provisions are applicable:
   - for bottom damage, adjacent athwartship compartments shall also be assumed flooded
   - the lower edge of any non-watertight opening (e.g. windows, doors and access hatchways) shall, at the final stage of flooding, be not less than 0,10 m above the damage waterline.

10.3.2 In general, permeability shall be assumed to be 95%. Where an average permeability of less than 95% is calculated for any compartment, this calculated value obtained may be used.

However, the minimum values of permeability μ given in Tab 2 are to be used.

For the main engine room, only the one-compartment status need be taken into account, i.e. the end bulkheads of the engine room shall be assumed as not damaged.

Table 2 : Permeability μ

Spaces	μ, in %
Engine room	85
Accommodation spaces	95
Double bottoms, oil fuel tanks, ballast tanks, etc., depending on whether, according to their function, they have to be assumed as full or empty for the vessel floating at the maximum permissible draught	0 or 95

10.3.3 The damage stability is generally regarded sufficient if (see Fig 1):

- At the stage of equilibrium (in the final stage of flooding), the angle of heel is not greater than 12°.

  Non-watertight openings shall not be flooded before reaching the stage of equilibrium. If such openings are immersed before the stage of equilibrium, the corresponding spaces shall be considered flooded for the purpose of stability calculation.

- The positive range of the righting lever curve beyond the stage of equilibrium has a righting lever of ≥ 0,05 m in association with an area under the curve of ≥ 0,0065 m.rad. The minimum values of stability shall be satisfied up to immersion of the first unprotected (non-weathertight) opening and in any event up to an angle of heel ≤ 27°. If non-weathertight openings are immersed before that stage, the corresponding spaces shall be considered flooded for the purpose of stability calculation.

10.3.4 If openings through which undamaged compartments may additionally become flooded are capable of being closed watertight, the closing appliances shall be marked accordingly.

10.3.5 Where cross- or down-flooding openings are provided for reduction of unsymmetrical flooding, the time of equalisation shall not exceed 15 minutes, provided during the intermediate stages of flooding sufficient stability has been proved.

Figure 1 : Proof of damage stability

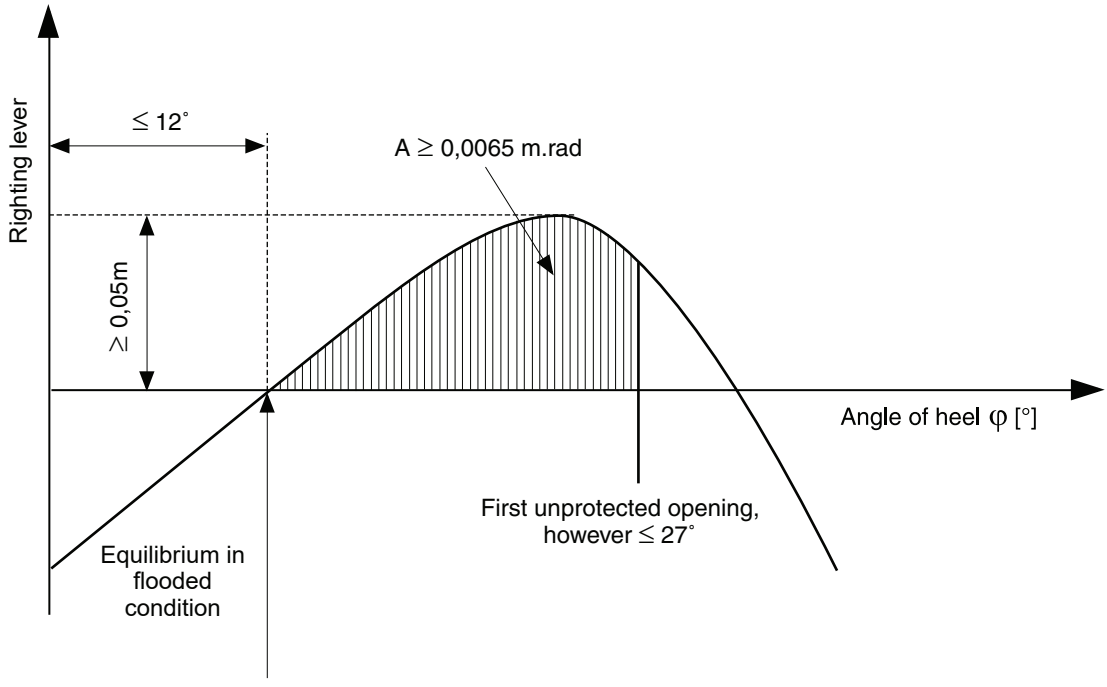

SECTION 7 TRANSPORT OF DRY DANGEROUS GOODS

Symbols

L_{OA} : Length overall, in m, defined in Pt B, Ch 1, Sec 2, [2.5]

B : Breadth, in m, defined in Pt B, Ch 1, Sec 2, [2.2]

B_2 : Breadth of the side tank, in m

D_2 : Height of the double bottom, in m.

1 General

1.1 Application

1.1.1 The additional service feature **DG1** is assigned, in compliance with Pt A, Ch 1, Sec 3, [2.2.6], to vessels intended to carry dry dangerous goods in quantities exceeding those indicated in Ch 3, App 2, [1].

1.1.2 The additional service feature **DG2** is assigned, in compliance with Pt A, Ch 1, Sec 3, [2.2.7], to vessels intended to carry dry dangerous goods in quantities limited to those indicated in Ch 3, App 2, [1].

1.1.3 Vessels dealt with in this Section are to comply with the requirements stated under Part A, Part B and Part C, as applicable, and with the requirements of this Section, which are specific to dry cargo vessels for the transport of dangerous goods.

1.1.4 The requirements in this section are to be applied for the additional service features **DG1** and **DG2** according to Tab 1.

Table 1 : Rules applicable for additional service features DG1 and DG2

Additional service feature	Applicable Articles
DG1	[2] to [6]
DG2	[2] to [5]

1.2 Documents to be submitted

1.2.1 Tab 2 lists the plans and documents to be submitted in addition to the documents required in the other Parts of the Rules for the parts of the vessel not affected by the cargo, as applicable.

2 Vessel arrangement

2.1 Accommodation and service spaces

2.1.1 The accommodation shall be separated from the holds by metal bulkheads having no openings.

2.1.2 Gastight closing appliances shall be provided for openings in the accommodation and wheelhouse facing the holds.

2.1.3 No entrances or openings of the engine rooms and service spaces shall face the protected area.

2.2 Water ballast

2.2.1 The double-hull spaces and double bottoms may be arranged for being filled with water ballast.

Table 2 : Documents to be submitted

No.	A/I	Document
1	I	List of products to be carried
2	I	General arrangement plan, showing location of cargo holds and fuel oil, ballast and other tanks
3	A	Location of void spaces and accesses to dangerous zones
4	A	Details of hull structure in way of cargo holds
5	A	Intact and damage stability calculations
6	A	Bilge and ballast system in cargo area
7	A	Ventilation system in cargo area
8	A	Details of electrical equipment installed in cargo area
9	A	Schematic electrical wiring diagram
10	A	Details of fire-extinguishing appliances and systems in cargo area

Note 1:
A = to be submitted for review
I = to be submitted for information.

2.3 Ventilation

2.3.1 Ventilation of each hold shall be provided by means of two mutually independent extraction ventilators having a capacity of not less than five changes of air per hour based on the volume of the empty hold. The extraction ducts shall be positioned at the extreme ends of the hold and extend down to not more than 50 mm above the bottom. The extraction of gases and vapours through the duct shall also be ensured for carriage in bulk.

If the extraction ducts are movable, they shall be suitable for the ventilator assembly and capable of being firmly fixed. Protection shall be ensured against bad weather and spray. The air intake shall be ensured during ventilation.

2.3.2 The ventilation system of a hold shall be arranged so that dangerous gases cannot penetrate into the accommodation, wheelhouse or engine rooms.

2.3.3 Ventilation shall be provided for the accommodation, wheelhouse and for service spaces.

2.4 Engines

2.4.1 Only internal combustion engines running on fuel having a flash point above 55°C are allowed. This provision does not apply to internal combustion engines which are part of propulsion and auxiliary systems fitted onboard vessels assigned one of the additional service features **Dualfuel** or **Gasfuel** according to Pt A, Ch 1, Sec 3, [1.3.5].

2.4.2 The air vents in the engine rooms and the air intakes of the engines which do not take air in directly from the engine room shall be located not less than 2,00 m from the protected area.

2.4.3 Sparking shall not be possible within the cargo area.

2.5 Oil fuel tanks

2.5.1 Double bottoms within the hold area may be arranged as oil fuel tanks provided their depth is not less than 0,6 m. Oil fuel pipes and openings to such tanks are not permitted in the holds.

2.5.2 The air pipes of all oil fuel tanks shall be led to 0,50 m above the open deck. Their open ends and the open ends of the overflow pipes leaking to the deck shall be fitted with a protective device consisting of a gauze grid or by a perforated plate.

2.6 Exhaust pipes

2.6.1 Exhausts shall be evacuated from the vessel into the open air either upwards through an exhaust pipe or through the shell plating. The exhaust outlet shall be located not less than 2,00 m from the hatchway openings. The exhaust pipes of engines shall be arranged so that the exhausts are led away from the vessel. The exhaust pipes shall not be located within the protected area.

2.6.2 Exhaust pipes shall be provided with a device pre venting the escape of sparks, e.g. spark arresters.

3 Cargo holds

3.1 General arrangements

3.1.1 Each cargo hold shall be bounded fore and aft by watertight metal bulkheads.

3.1.2 The cargo holds shall have no common bulkhead with the fuel oil tanks.

3.1.3 The bottom of the holds shall be such as to permit them to be cleaned and dried.

3.1.4 Hatch covers for the cargo holds must be spraytight and weathertight. The use of waterproof tarpaulins is also possible to cover the cargo holds, if the tarpaulin shall not readily ignite.

3.2 Heating installation

3.2.1 It is not allowed to arrange heating appliances in the cargo holds.

3.3 Stripping installation

3.3.1 The stripping pumps intended for the holds shall be located in the protected area. This requirement shall not apply when stripping is effected by eductors.

4 Electrical installations

4.1 Type and location of electrical installations and equipment

4.1.1 If the vessel is located within or in the immediate vicinity of an onshore assigned zone, electrical installations and equipment outside the protected area shall be at least of the 'limited explosion risk' type. This provision does not apply to:

a) Lighting installations in the accommodation and in the wheelhouse, except for switches located near to the entrances

b) Mobile phones, fixed telephone installations as well as stationary and portable computers in the accommodation or the wheelhouse

c) Electrical installations and equipment which, during a stay in the immediate vicinity of or within a shoreside assigned zone, are:
   - not live, or
   - Installed in spaces which are equipped with a ventilation system according to [2.3]

d) Radiotelephone installations and inland AIS (automatic identification systems) stations in the accommodation and in the wheelhouse if no part of an aerial for radiotelephone installations or AIS stations is situated above or within 2,00 m from the protected area.

4.1.2 Fixed electrical installations and equipment which do not meet the requirements set out in [4.1.1] and their switches shall be marked in red. The disconnection of such equipment shall be controlled from a centralized location on board.

4.1.3 Sockets for the connection of signal lights, gangway lighting and containers shall be fitted to the vessel close to the signal mast or the gangway or the containers. Sockets intended to supply the submerged pumps and hold ventilators shall be permanently fitted to the vessel in the vicinity of the hatches. The sockets shall be designed to ensure that it is only possible to connect or disconnect them when they are not live

4.1.4 Failure of the power supply for the safety and control equipment shall be immediately indicated by visual and audible signals in the wheelhouse and on the deck. The alarm must be relayed to the accommodation automatically if it has not been switched off.

4.1.5 Electrical switches, sockets and cables on deck shall be protected against mechanical damage.

4.1.6 The requirements of [4.1.1] and [4.1.2] shall be met only if the vessel is located within or in the immediate vicinity of an onshore assigned zone.

4.2 Type and location of electrical and non-electrical installations and equipment for use in the protected area

4.2.1 It shall be possible to switch off the electrical installations and equipment in the protected area by means of centrally located isolation switches except where:

- In the holds, they are appropriate at least for use in zone 1, for temperature class T4 and explosion group II B; and
- In the protected area on the deck, they are of the limited explosion risk type.

The corresponding electrical circuits shall have control lamps to indicate whether or not the circuits are live.

The isolation switches shall be protected against unintended operation. Submerged pumps installed or used in the holds shall be appropriate at least for use in zone 1, temperature class T4 and explosion group II B.

4.2.2 The sockets used in the protected area shall be designed so as to prevent connection or disconnection except when they are not live.

4.2.3 Except in the case of optical fibres, electrical cables within the protected area shall be armoured or placed in a metallic sheath or in protective tubes.

4.2.4 Movable electric cables are prohibited in the protected area, except electric cables for intrinsically safe electric circuits or for connecting:

a) Signal lights and lighting for gangways, provided the connection point (for example, the socket) is permanently fitted to the vessel close to the signal mast or gangway

b) Containers

c) Electrically operated hatch cover gantries

d) Submerged pumps

e) Hold ventilators

f) The power network on a vessel to a land-based power network; provided that:
   - The electric cables and the power supply unit conform to a valid standard
   - The power supply unit and connectors are located outside of the protected area.

Connecting and disconnecting sockets/connectors shall only be possible when they are not live.

4.2.5 For movable electrical cables permitted in accordance with [4.2.4], only rubber-sheathed electrical cables of type H07 RN-F in accordance with IEC-60245-4:2011 or electrical cables of at least equivalent design having conductors with a cross-section of not less than 1.5 mm^2, shall be used.

4.2.6 Non-electrical installations and equipment in the protected area which are intended for use during loading and unloading or stay in the immediate vicinity of or within a shoreside assigned zone shall meet at least the requirements for use in the area concerned. They shall meet at least the requirements for temperature class T4 and explosion group II B.

4.3 Metal wires, masts

4.3.1 All metal wires passing over the holds and all masts shall be earthed, unless they are electrically bonded to the metal hull of the vessel through their installation.

4.4 Storage batteries

4.4.1 The installation of storage batteries inside the protected area is not permissible.

5 Fire protection and fire extinction

5.1 Fire and naked light

5.1.1 The outlets of funnels shall be located not less than 2,00 m from the cargo area. Arrangements shall be provided to prevent the escape of sparks and the entry of water.

5.1.2 Heating, cooking and refrigerating appliances shall not be fuelled with liquid fuels, liquid gas or solid fuels.

The installation in the engine room or in another separate space of heating appliances fuelled with liquid fuel having a flash-point above 55°C is, however, permitted.

Cooking and refrigerating appliances are permitted only in the accommodation.

5.1.3 Only electrical lamps are permitted.

5.2 Fire extinguishing arrangements

5.2.1 In addition to the requirements of Part C, Chapter 4, the fire extinguishing arrangements in [5.3] to [5.5] are to be complied with.

5.3 Portable fire extinguishers

5.3.1 In addition to the fire-extinguishing appliances prescribed in Pt C, Ch 4, Sec 4, [2], the vessel shall be equipped with at least two additional portable fire-extinguishers having the same capacity in the protected area or in proximity with it.

These additional portable fire-extinguishers shall be suitable for fighting fires involving the dangerous goods carried.

5.4 Water fire extinguishing system

5.4.1 A water fire-extinguishing system complying with the following requirements shall be installed on the vessel:

- It shall be supplied by two independent fire or ballast pumps one of which shall be ready for use at any time. These pumps and their means of propulsion and electrical equipment shall not be installed in the same space.
- It shall be provided with a water main fitted with at least three hydrants in the cargo area above deck. Three suitable and sufficiently long hoses with spray/jet nozzles having a diameter of not less than 12 mm shall be provided.
- It shall be possible to reach any point of the deck in the cargo area simultaneously with at least two jets of water not supplied from the same hydrant.

  A spring-loaded non-return valve shall be fitted to ensure that no gases can escape through the fire-extinguishing system into the accommodation or service spaces outside the cargo area.
- The capacity of the system shall be at least sufficient for a jet of water to have a minimum reach of not less than the vessel's breadth from any location on board with two spray nozzles being used at the same time.
- The water supply system shall be capable of being put into operation from the wheelhouse and from the deck.

5.5 Fixed fire extinguishing system

5.5.1 In addition the machinery spaces shall be provided with a fixed fire-extinguishing system, in compliance with Pt C, Ch 4, Sec 4, [4].

6 Additional rules applicable to double hull vessels

6.1 Application

6.1.1 The requirements of this Article are applicable to double hull vessels intended to carry dangerous goods in quantities exceeding those indicated in Ch 3, App 2, [1.1.1].

6.2 Holds

6.2.1 Within the protected area, the vessel shall be built as a double-hull vessel with double-hull spaces and double bottom in compliance with [6.2.2] and [6.2.3].

Alternative constructions will be specially considered by the Society on a case-by-case basis.

6.2.2 The distance between the sides of the vessel and the longitudinal bulkheads of the cargo hold shall be not less than 0,80 m.

6.2.3 The depth of the double bottom shall be at least 0,50 m. The depth below the suction wells may, however, be locally reduced, but the space between the bottom of the suction well and the bottom of the vessel floor shall be at least 0,40 m. If spaces are between 0,40 m and 0,49 m, the surface area of the suction well shall not exceed 0,5 m^2.

The capacity of the suction wells shall not exceed 0,120 m^3.

6.3 Emergency exit

6.3.1 Spaces not flooded of which the entrances or exits are partly or fully immersed in damage condition shall be provided with an emergency exit not less than 0,10 m above the damage waterline. This requirement does not apply to fore peak and aft peak.

6.4 Damage stability

6.4.1 The basic values for the stability calculation (the vessel's lightweight and location of the centre of gravity) shall be determined:

- either by means of an heeling experiment, or
- by detailed mass and moment calculation, in which case the lightweight of the vessel shall be verified by checking the draught, with a tolerance limit of ± 5% between the mass determined by calculation and the displacement determined by the draught readings.

6.4.2 Sufficient buoyancy and stability of the vessel in the event of flooding shall be proven with a cargo corresponding to its maximum draught and evenly distributed among all the holds and with maximum supplies and fully fuelled.

For diversified cargo, the stability calculation shall be performed for the most unfavourable loading condition.

For this purpose, mathematical proof of sufficient stability shall be determined for the intermediate stages of flooding (25%, 50% and 75% of flood build up, and, where appropriate, for the stage immediately prior to transverse equilibrium) and for the final stage of flooding, in the loading conditions specified above.

6.4.3 The following assumptions shall be taken into account for the damaged condition:

a) Extent of side damage:
   - longitudinal extent: at least 0,10 L_{OA}
   - transverse extent: B_2 − 0,01 m
   - vertical extent: from base line upwards without limit

b) Extent of bottom damage:
   - longitudinal extent: at least 0,10 L_{OA}
   - transverse extent: 3,00 m
   - vertical extent: from base line to D_2 − 0,01 m upwards, the sump excepted

c) Any bulkhead within the damaged area shall be assumed damaged, which means that the subdivision shall be chosen so that the vessel remains afloat after

flooding of two or more adjacent compartments in the longitudinal direction.

For the main engine room only the one-compartment status needs to be taken into account, i.e. the end bulkheads of the engine room shall be assumed as not damaged.

For bottom damage, adjacent athwartship compartments shall also be assumed as flooded.

d) Permeability

Permeability shall be assumed to be 95%.

If a calculation proves that the average permeability of a compartment is less than 95%, the calculated value may be used instead.

The values used shall not be less than those given in Tab 3.

e) The calculation of free surface effect in intermediate stages of flooding shall be based on the gross surface area of the damaged compartments.

Table 3 : Permeability μ

Spaces	μ, in %
Engine and service rooms	85
Cargo holds	70
Double bottoms, fuel tanks, ballast tanks, etc. depending on whether, according to their function, they have to be assumed as full or empty for the vessel floating at the maximum permissible draught	0 or 95

6.4.4 For all intermediate stages of flooding referred to in [6.4.2], the following criteria shall be met:

a) the heeling angle φ at the equilibrium position of the intermediate stage in question shall not exceed 15° (5° where containers are not secured)

b) beyond the heel in the equilibrium position of the intermediate stage of flooding in question, the positive part of the righting lever curve shall display a righting lever value of GZ ≥ 0,02 m (0,03 m where containers are not secured) before the first unprotected opening becomes immersed or a heeling angle φ of 27° is reached (15° where containers are not secured)

c) non-watertight openings shall not be immersed before the heel in the equilibrium position of the intermediate stage in question has been reached.

6.4.5 During the final stage of flooding, the following criteria shall be met:

a) the lower edge of non-watertight openings (e.g., doors, windows, access hatches) shall be not less than 0,10 m above the damaged waterline

b) the heeling angle φ at the equilibrium position shall not exceed 12° (5° where containers are not secured), see Fig 1.

c) beyond the heel in the equilibrium position of the intermediate stage of flooding in question, the positive part of the righting lever curve shall display a righting lever value of GZ ≥ 0,05 m and the area under the curve shall reach at least 0,0065 m.rad before the first unprotected (non-weathertight) opening becomes immersed or a heeling angle φ of 27° (10° where containers are not secured) is reached

d) if non-weathertight openings are immersed before the equilibrium position is reached, the rooms affording access shall be deemed flooded for the purposes of the damaged stability calculation.

6.4.6 When cross- or down-flooding openings are provided to reduce unsymmetrical flooding, the time for equalisation shall not exceed 15 minutes, if during the intermediate stages of flooding sufficient damaged stability has been demonstrated.

6.4.7 If openings through which undamaged compartments may additionally become flooded are capable of being closed watertight, the closing appliances shall be marked according to their operating instructions.

6.4.8 Where necessary in order to meet the requirements in [6.4.2], the plane of maximum draught shall be re-established.

Figure 1 : Proof of damage stability (final stage of flooding)

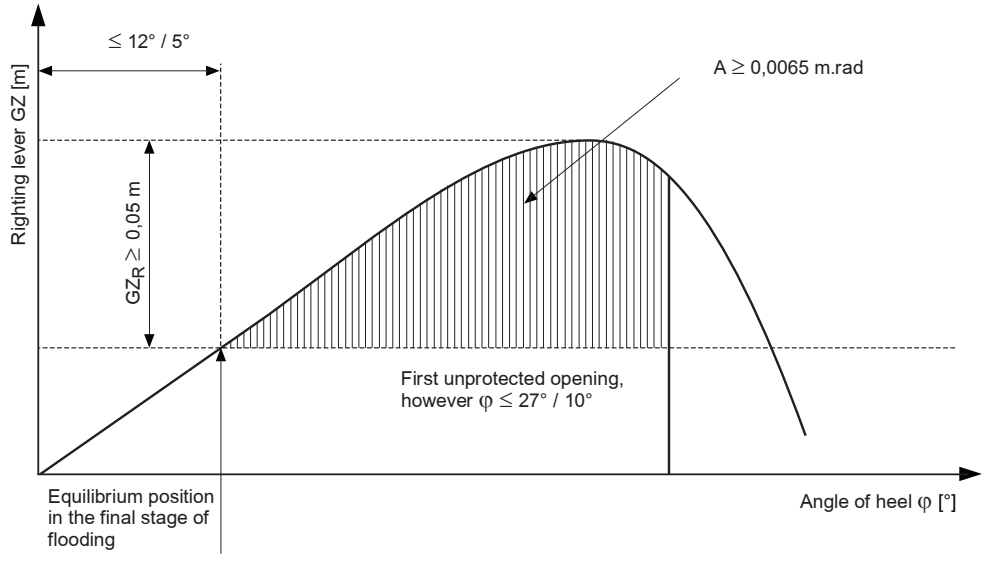

SECTION 8 DGL

1 General

1.1 Application

1.1.1 The additional service feature **DGL** is assigned, in compliance with Pt A, Ch 1, Sec 3, to propulsion vessels involved in a pushed convoy or a side-by-side formation comprising a tank vessel carrying dangerous substances.

1.1.2 These vessels are to comply with the requirements stated under Part A, Part B and Part C, as applicable, and with the requirements of this Section, which are specific to additional service feature **DGL**.

1.1.3 Other vessels (in the convoy or side-by-side formation) not carrying dangerous goods shall comply with the requirements of Ch 3, Sec 9.

2 Vessel arrangements

2.1 Materials

2.1.1 The vessel's hull shall be constructed of shipbuilding steel or other at least equivalent metal.

All permanently fitted materials in the accommodation or wheelhouse, with the exception of furniture, shall not readily ignite. They shall not evolve fumes or toxic gases in dangerous quantities, if involved in a fire.

The use of plastic material for vessel's boats is permitted only if the material does not readily ignite.

2.2 Protection against penetration of gases

2.2.1 The vessel shall be designed so as to prevent dangerous gases and liquids from penetrating into the accommodation, wheelhouse and the service spaces. None of the windows in these spaces shall be capable of being opened unless its intended use is as an emergency exit and it is marked as such.

2.2.2 Liquid-tight protective coamings shall be fitted on deck at the height of the external bulkheads of the cargo tanks, at a maximum distance of 0,60 m from the outer cofferdam bulkheads or the hold end bulkheads. The protective coamings shall either extend over the entire width of the vessel or be fixed between the longitudinal spill coamings so as to prevent liquids from entering the forepeak and afterpeak. The height of the protective coamings and the spill coamings shall be at least 0,075 m. The protective coaming may correspond to the protection wall if the protection wall extends across the entire width of the vessel.

2.2.3 The bulwarks, foot-rails, etc. shall be provided with sufficiently large openings which are located directly above the deck.

2.3 Ventilation

2.3.1 Ventilation of accommodation shall be possible.

Any ventilation inlets of accommodation leading outside shall be fitted with fire flaps. Such ventilation inlets shall be located not less than 2,00 m from the cargo area.

2.4 Engine rooms

2.4.1 Internal combustion engines for the vessel's propulsion as well as internal combustion engines for auxiliary machinery shall be located outside the cargo area. Entrances and other openings of engine rooms shall be at a distance of not less than 2,00 m from any hazardous area comparable to zone 0 or 1.

The engine rooms shall be accessible from the deck; the entrances shall not face the cargo area. Where the doors are not located in a recess whose depth is at least equal to the door width, the hinges shall face the cargo area.

2.5 Accommodation and service spaces

2.5.1 Accommodation spaces and the wheelhouse shall be located outside the cargo area forward of the fore vertical plane or abaft the aft vertical plane bounding the part of the cargo area below deck. Windows of the wheelhouse which are located not less than 1 m above the bottom of the wheelhouse may tilt forward.

2.5.2 Entrances to spaces and openings of superstructures shall not face the cargo area. Doors opening outward and not located in a recess whose depth is at least equal to the width of the doors shall have their hinges face the cargo area.

2.5.3 Entrances from the deck and openings of spaces facing the weather shall be capable of beingclosed.

2.5.4 Entrances and windows of superstructures and accommodation spaces which can be opened as well as other openings of these spaces shall be located not less than 2,00 m from the cargo area. No wheelhouse doors and windows shall be located within 2,00 m from the cargo area, except where there is no direct connection between the wheelhouse and the accommodation.

2.6 Engines

2.6.1 Only internal combustion engines running on fuel having a flash point above 55°C are allowed. This provision does not apply to internal combustion engines which are part of propulsion and auxiliary systems fitted onboard vessels assigned one of the additional service features **Dualfuel** or **Gasfuel** according to Pt A, Ch 1, Sec 3, [1.3.5].

2.6.2 Ventilation inlets of the engine room and, when the engines do not take in air directly from the engine room, air intakes of the engines shall be located not less than 2,00 m from any hazardous area comparable to zone 0 or 1.

2.6.3 The ventilation in the closed engine room shall be designed so that, at an ambient temperature of 20°C, the average temperature in the engine room does not exceed 40°C.

2.7 Fuel oil tanks

2.7.1 The open ends of the air pipes of each liquid fuel oil tank shall extend to 0,5 m above the open deck. These open ends and the open ends of overflow pipes leading to the deck shall be provided with a protecting screen.

2.8 Exhaust pipes

2.8.1 Exhaust shall be evacuated from the vessel into the open air either upwards through an exhaust pipe or through the shell plating. The exhaust outlet shall be located not less than 2,00 m from the cargo area. The exhaust pipes of engines shall be arranged so that the exhausts are led away from the vessel. The exhaust pipes shall not be located within any hazardous area comparable to zone 0 or 1.

2.8.2 Exhaust pipes shall be provided with spark arresters.

3 Electrical installations

3.1 Type and location of electrical installations and equipment

3.1.1 Electrical installations and equipment shall be of at least the "limited explosion risk" type.

This provision does not apply to:

a) Lighting installations in the accommodation and the wheelhouse, except for switches near to the entrances

b) Mobile phones, fixed telephone installations, stationary and portable computers and loading instruments in the accommodation or the wheelhouse

c) Electrical installations and equipment which, during a stay in the immediate vicinity of or within a shoreside assigned zone:

   1) are extinguished; or

   2) are placed in premises equipped with a ventilation system according to [2.3]

d) Radiotelephone installations and inland AIS (automatic identification systems) stations in the accommodation and the wheelhouse, if no part of an aerial for radiotelephone installations or AIS stations is situated above or within 2,00 m of the cargo area.

3.1.2 In the cofferdams, double-hull spaces, double bottoms and hold spaces, only hermetically sealed echo sounding devices are allowed, the cables of which are led through thick-walled steel tubes with gastight connections up to the main deck.

3.1.3 The fixed electrical installations and equipment which do not meet the requirements set out in [3.1.1] and their switches shall be marked in red. The disconnection of such equipment shall be controlled from a centralized location on board.

3.1.4 Every insulated distribution network shall be fitted with an automatic device with a visual and audible alarm for checking the insulation level.

3.1.5 Only distribution systems without return connection to the hull are permitted. This provision does not apply to:

- Active cathodic corrosion protection
- Certain limited sections of the installations situated outside the cargo area (e.g., connections of starters of diesel engines)
- The device for checking the insulation level referred to in [3.1.4].

3.1.6 An electric generator which is permanently driven by an engine and which does not meet the requirements of [3.1.1], shall be fitted with a switch capable of shutting down the generator. A notice board with the operating instructions shall be displayed near the switch.

3.1.7 Failure of the power supply for the safety and control equipment shall be immediately indicated by visual and audible signals in the wheelhouse and on the deck. The alarm must be relayed to the accommodation automatically if it has not been switched off.

3.1.8 Electrical switches, sockets and cables on deck shall be protected against mechanical damage.

3.1.9 Vessels are only required to meet the requirements of [3.1.1] and [3.1.3], if the vessel remains in the immediate vicinity of or within a shoreside assigned zone.

4 Fire protection and fire extinction

4.1 Fire and naked light

4.1.1 The outlets of funnels shall be located not less than 2,00 m from the cargo area. Arrangements shall be provided to prevent the escape of sparks and the entry of water.

4.1.2 Heating, cooking and refrigerating appliances shall not be fuelled with liquid fuels, liquid gas or solid fuels.

The installation in the engine room or in another separate space of heating appliances fuelled with liquid fuel having a flash-point above 55°C is, however, permitted.

Cooking and refrigerating appliances are permitted only in the accommodation.

4.1.3 Only electrical lamps are permitted.

4.2 Fire extinguishing arrangements

4.2.1 In addition to the requirements of Part C, Chapter 4, the fire extinguishing arrangements in [4.3] to [4.5] are to be complied with.

4.3 Portable fire extinguishers

4.3.1 In addition to the fire-extinguishing appliances prescribed in Pt C, Ch 4, Sec 4, [2], the vessel shall be equipped with at least two additional portable fire-extinguishers having the same capacity in cargo area.

These additional portable fire-extinguishers shall be suitable for fighting fires involving the dangerous goods carried.

4.4 Water fire extinguishing system

4.4.1 A water fire-extinguishing system complying with the following requirements shall be installed on the vessel:

- It shall be supplied by one independent fire or ballast pump ready for use at any time.
- It shall be provided with a water main fitted with at least three hydrants in the cargo area above deck. Three suitable and sufficiently long hoses with spray/jet nozzles having a diameter of not less than 12 mm shall be provided.
- It shall be possible to reach any point of the deck in the cargo area simultaneously with at least two jets of water not supplied from the same hydrant.

  A spring-loaded non-return valve shall be fitted to ensure that no gases can escape through the fire-extinguishing system into the accommodation or service spaces outside the cargo area.
- The capacity of the system shall be at least sufficient for a jet of water to have a minimum reach of not less than the vessel's breadth from any location on board with two spray nozzles being used at the same time.
- The water supply system shall be capable of being put into operation from the wheelhouse and from the deck.

4.5 Fixed fire extinguishing system

4.5.1 In addition machinery spaces shall be provided with a fixed fire-extinguishing system, in compliance with Pt C, Ch 4, Sec 4, [4].

SECTION 9 DGD

1 General

1.1 Application

1.1.1 The additional service feature **DGD** is assigned, in compliance with Pt A, Ch 1, Sec 3, to vessels (not carrying dangerous goods) involved in a pushed convoy or a side-by-side formation comprising a cargo vessel or a tanker carrying dangerous substances.

1.1.2 These vessels are to comply with the requirements stated under Part A, Part B and Part C, as applicable, and with the requirements of this Section, which are specific to additional service feature **DGD**.

2 Vessel arrangements

2.1 Materials

2.1.1 The vessel's hull shall be constructed of shipbuilding steel or other metal, provided that this metal has at least equivalent mechanical properties and resistance to the effects of temperature and fire.

2.2 Ventilation

2.2.1 Ventilation shall be provided for the accommodation, wheelhouse and for service spaces.

2.3 Accommodation and service spaces

2.3.1 Gastight closing appliances shall be provided for openings in the accommodation and wheelhouse facing the holds.

No entrances or openings of the engine rooms and service spaces shall face the protected area.

2.4 Engines

2.4.1 Only internal combustion engines running on fuel having a flash point above 55°C are allowed. This provision does not apply to internal combustion engines which are part of propulsion and auxiliary systems fitted onboard vessels assigned one of the additional service features **Dualfuel** or **Gasfuel** according to Pt A, Ch 1, Sec 3, [1.3.5].

2.4.2 The air vents of the engine rooms and the air intakes of the engines which do not take air in directly from the engine room shall be located not less than 2,00 m from the protected area.

Equipment producing sparks shall not be located in the protected area.

2.5 Fuel oil tanks

2.5.1 Double bottoms within the hold area may be arranged as fuel oil tanks provided their depth is not less than 0,60 m. Fuel oil pipes and openings to such tanks are not permitted in the holds.

The air pipes of all fuel oil tanks shall be led to 0,50 m above the open deck. Their open ends and the open ends of the overflow pipes leaking to the deck shall be fitted with a protective device consisting of a gauze gird or a perforated plate.

2.6 Exhaust pipes

2.6.1 Exhaust shall be evacuated from the vessel into the open air either upwards through an exhaust pipe or through the shell plating. The exhaust outlet shall be located not less than 2,00 m from the hatchway openings. The exhaust pipes of engines shall be arranged so that the exhausts are led away from the vessel. The exhaust pipes shall not be located within the protected area.

Exhaust pipes shall be provided with a device preventing the escape of sparks, e.g. spark arresters.

3 Electrical installations

3.1 Type and location of electrical installations and equipment

3.1.1 Electrical installations and equipment outside the protected area shall be at least of the 'limited explosion risk' type. This provision does not apply to:

a) Lighting installations in the accommodation and in the wheelhouse, except for switches located near to the entrances

b) Mobile phones, fixed telephone installations as well as stationary and portable computers in the accommodation or the wheelhouse

c) Electrical installations and equipment which, during a stay in the immediate vicinity of or within a shoreside assigned zone, are:
   - not live, or
   - Installed in spaces which are equipped with a ventilation system according to [2.2]

d) Radiotelephone installations and inland AIS (automatic identification systems) stations in the accommodation and in the wheelhouse if no part of an aerial for radiotelephone installations or AIS stations is situated above or within 2,00 m from the protected area.

3.1.2 Fixed electrical installations and equipment which do not meet the requirements set out in [3.1.1] and their switches shall be marked in red. The disconnection of such equipment shall be controlled from a centralized location on board.

3.1.3 Sockets for the connection of signal lights, gangway lighting and containers shall be fitted to the vessel close to the signal mast or the gangway or the containers. Sockets intended to supply the submerged pumps and hold ventilators shall be permanently fitted to the vessel in the vicinity of the hatches. The sockets shall be designed to ensure that it is only possible to connect or disconnect them when they are not live

3.1.4 Failure of the power supply for the safety and control equipment shall be immediately indicated by visual and audible signals in the wheelhouse and on the deck. The alarm must be relayed to the accommodation automatically if it has not been switched off.

3.1.5 Electrical switches, sockets and cables on deck shall be protected against mechanical damage.

3.1.6 The requirements of [3.1.1] and [3.1.2] shall be met only if the vessel is located within or in the immediate vicinity of an onshore assigned zone.

4 Fire protection and fire extinction

4.1 Fire and naked light

4.1.1 The outlets of funnels shall be located not less than 2,00 m from the hatchway openings. Arrangements shall be provided to prevent the escape of sparks and the entry of water.

Heating, cooking and refrigerating appliances shall not be fuelled with liquid fuels, liquid gas or solid fuels. The installation in the engine room or in another separate space of heating appliances fuelled with liquid fuel having a flashpoint above 55°C is, however, permitted. Cooking and refrigerating appliances are permitted only in wheelhouses with metal floor and in the accommodation.

Electrical lamps only are permitted outside the accommodation and the wheelhouse.

4.2 Fire-extinguishing arrangements

4.2.1 The vessel shall comply with applicable requirements of Pt C, Ch 3, Sec 4.

APPENDIX 1 DEFINITIONS

1 Definitions

1.1 Accommodation

1.1.1 Accommodation means spaces intended for the use of persons normally living on board, including galleys, food stores, lavatories, washrooms, bathrooms, laundries, halls, alleyways, etc., but excluding the wheelhouse.

1.2 ADN

1.2.1 ADN means European agreement concerning the international carriage of dangerous goods by inland waterways.

1.3 Auto-ignition temperature

1.3.1 Auto-ignition temperature (EN 1127-1:1997, No. 331) means the lowest temperature determined under prescribed test conditions of a hot surface on which a flammable substance in the form of a gas/air or vapour/air mixture ignites.

1.4 Bilge water

1.4.1 Bilge water means oily water from the engine room bilges, the peaks, the cofferdams and the double hull spaces.

1.5 Bulk container

1.5.1 Bulk container means a containment system (including any liner or coating) intended for the carriage of solid substances which is in direct contact with the containment system. Packagings, intermediate bulk containers (IBCs), large packagings and tanks are not included.

e.g.: containers, load compartments of vehicles or wagons.

1.6 Bulkhead

1.6.1 Bulkhead means a metal wall, generally vertical, inside the vessel and which is bounded by the bottom, the side plating, a deck, the hatchway covers or by another bulkhead.

1.7 Cargo area of tank vessels

1.7.1 Cargo area of tank vessels means the whole of the spaces defined in [1.7.2] and [1.7.3] (see Fig 1).

1.7.2 Cargo area of tank vessels (part above deck)

Cargo area of tank vessels (part above deck) means the space which is bounded:

a) at the sides, by the shell plating extending upwards from the decks sides

b) fore and aft, by planes inclined at 45° towards the cargo area, starting at the boundary of the cargo area part below deck

c) vertically, by a horizontal plane at a height H above the deck, in m, to be determined as follows:

- for vessels with superstructure (see Pt B, Ch 1, Sec 2, [2.8.1] for definition):

  $H = \text{Min}\ (z_S - z_D\ ;\ 3)$

  where:

  z_S : Z-coordinate of the superstructure deck

  z_D : Z-coordinate of the main deck in way of the midship section

- for vessels without superstructure (e.g., non-propelled vessels):

  $H = 0$

Figure 1 : Cargo area

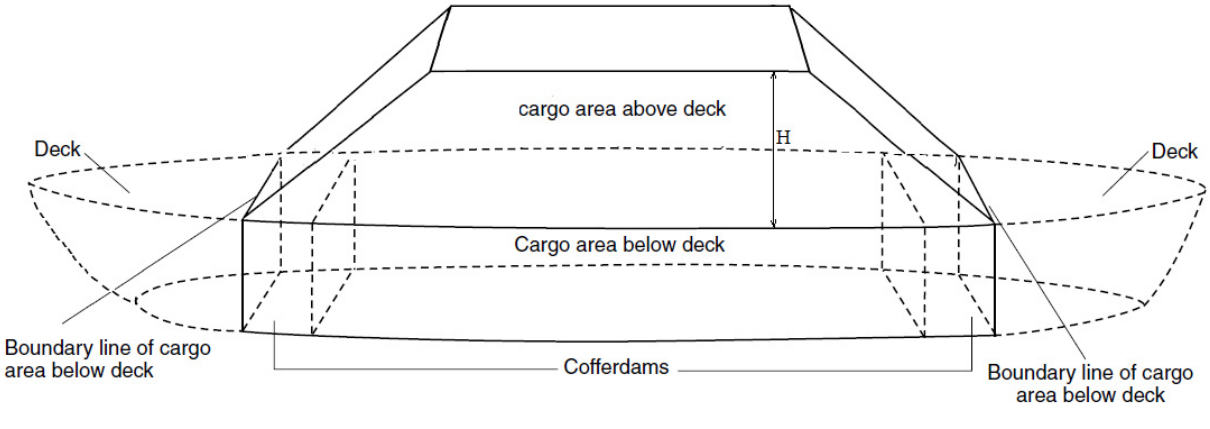

1.7.3 Cargo area of tank vessels (part below deck)

Cargo area of tank vessels (part below deck) means the space between two vertical planes perpendicular to the centre-line plane of the vessel, which comprises cargo tanks, hold spaces, cofferdams, double-hull spaces and double bottoms; these planes normally coincide with the outer cofferdam bulkheads or hold end bulkheads. Their intersection line with the deck is referred to as the boundary of the cargo area part below deck.

1.8 Cargo area of dry cargo vessels

1.8.1 See [1.30], Protected area.

1.9 Cargo pump room

1.9.1 Cargo pump-room means a service space where the cargo pumps and stripping pumps are installed together with their operational equipment.

1.10 Cargo tank

1.10.1 Cargo tank means a tank which is permanently attached to the vessel and intended for the carriage of dangerous goods.

1.10.2 Cargo tank design

a) Pressure cargo tank

Pressure cargo tank means a cargo tank independent of the vessel's hull, built according to dedicated recognised standards for a working pressure ≥ 400 kPa.

b) Closed cargo tank

Closed cargo tank means a cargo tank connected to the outside atmosphere through a device preventing unacceptable internal overpressure or underpressure.

c) Open cargo tank with flame arrester

Open cargo tank with flame arrester means a cargo tank connected to the outside atmosphere through a device fitted with a flame arrester.

d) Open cargo tank

Open cargo tank means a cargo tank in open connection with the outside atmosphere.

1.10.3 Cargo tank type

a) Independent cargo tank

Independent cargo tank means a cargo tank which is permanently built in, but which is independent of, the vessel's structure.

When, for an independent cargo tank, an anti-explosion protection is required, comparable to zone 0, see [1.21.2].

b) Integral cargo tank

Integral cargo tank means a cargo tank which is constituted by the vessel's structure itself and bounded by the outer hull or by walls separate from the outer hull.

c) Cargo tank with walls distinct from the outer hull

Cargo tank with walls distinct from the outer hull means an integral cargo tank of which the bottom and side walls do not form the outer hull of the vessel or an independent cargo tank.

1.11 Cargo residues

1.11.1 Cargo residues means liquid cargo which cannot be pumped out of the cargo tanks or cargo piping by means of the stripping system.

1.12 Closed-type sampling device

1.12.1 Closed-type sampling device means a device penetrating through the boundary of the cargo tank but constituting a part of a closed system designed so that during sampling no gas or liquid may escape from the cargo tank.

1.13 Cofferdam

1.13.1 Cofferdam means an athwartship compartment which is bounded by watertight bulkheads and which can be inspected. The cofferdam shall extend over the whole area of the end bulkheads of the tanks. The bulkheads not facing the cargo area (outer cofferdam bulkhead) shall extend from one side of the vessel to the other and from the bottom to the deck in one frame plane.

1.14 Design pressure

1.14.1 Design pressure means the pressure on the basis of which the cargo tank or the residual cargo tank has been designed and built.

1.15 Dangerous goods

1.15.1 Dangerous goods mean substances and articles the carriage of which is prohibited by ADN or equivalent standards, or authorized only under the conditions prescribed therein.

Equipment and articles which are assigned a UN number and transported as cargo are not included.

1.16 Equipment

1.16.1 Equipment means electrical or non-electrical machines, apparatus, fixed or mobile devices, control components and instrumentation thereof and detection or prevention systems which, separately or jointly, are intended for the generation, transfer, storage, measurement, control and conversion of energy and/or the processing of material and which are capable of causing an explosion through their own potential sources of ignition.

1.17 Explosion group

1.17.1 Explosion group/subgroup means a grouping of flammable gases and vapours according to their maximum experimental safe gaps and minimum ignition currents, and of electrical apparatus intended to be used in a potentially explosive atmosphere (see IEC 60079-0: 2012), installations, equipment and self-contained protection systems. For self-contained protection systems, the explosion group II B is subdivided into subgroups.

1.18 Explosion protection

1.18.1 Explosion protection means all of the requirements which have to be met and means which have to be taken to avoid damage caused by explosions.

This includes:

Organizational measures such as, for example:

a) Determining explosion hazardous areas (classification of zones): in which an explosive atmosphere consisting of a mixture with air of flammable gases, vapours or sprays is likely to occur:
   - continuously or for long periods or frequently (zone 0)
   - occasionally in normal operation (zone 1) or
   - exceptionally or only briefly (zone 2)

b) Prevention of ignition sources (use of low-sparking hand-tools, no smoking, use of personal protective equipment including dissipative shoes, non-isolating gloves, etc.)

c) Drafting of working instructions.

And technical requirements such as, for example:

a) Use of installations and equipment proven to be appropriate for use in the different explosion hazardous areas

b) Use of self-contained protection systems

c) Monitoring of potentially explosive atmospheres by the use of gas detection systems and gas detectors

1.19 Flame arrester

1.19.1 Flame arrester means a device mounted in the vent of part of an installation or in the interconnecting piping of a system of installations, the purpose of which is to permit flow but prevent the propagation of a flame front. The flame arrester shall be tested according to the international standard ISO 16852:20161 and evidence of compliance with the applicable requirements shall be supplied.

1.20 Flash-point

1.20.1 Flash-point means the lowest temperature of a liquid at which its vapours form a flammable mixture with air.

1.21 Hazardous areas

1.21.1 Hazardous areas are areas in which an explosive atmosphere is or may be expected to be present in quantities such as to require special precautions for the construction, installation and use of electrical apparatus.

Note 1: An explosive gas atmosphere is a mixture with air, under atmospheric conditions, of flammable substances in the form of gas, vapour or mist, in which, after ignition, combustion spreads throughout the unconsumed mixture.

1.21.2 Hazardous areas are classified in the following zones based upon the frequency and the duration of the occurrence of explosive atmosphere:

- Zone 0: areas in which dangerous explosive atmospheres of gases, vapours or sprays exist permanently or during long periods
- Zone 1: areas in which dangerous explosive atmospheres of gases, vapours or sprays are likely to occur occasionally
- Zone 2: areas in which dangerous explosive atmospheres of gases, vapours or sprays are likely to occur rarely and, if so, for short periods only.

1.21.3 The different spaces of a tanker intended to carry substances for which anti-explosion protection is prescribed in column (17) of App 3, Tab 2, are to be classified according to Tab 1.

1.22 High-velocity vent valve

1.22.1 High-velocity vent valve means a pressure relief valve designed to have nominal flow velocities which exceed the flame velocity of the explosive mixture, thus preventing flame transmission. When the vessel substance list according to Ch 3, Sec 1, [4.3.2] contains substances for which explosion protection is required in column (17) of Ch 3, App 3, Tab 2, this pressure relief device shall be tested in accordance with international standard ISO 16852:2016 and evidence of compliance with the applicable requirements shall be supplied.

1.23 Intermediate bulk container (IBC)

1.23.1 Intermediate bulk container (IBC) means a rigid, or flexible portable packaging that:

a) has a capacity of not more than:
   - 3,0 m^3 for solids and liquids of packing groups II and III
   - 1,5 m^3 for solids of packing group I when packed in flexible, rigid plastics, composite, fibreboard and wooden IBCs
   - 3,0 m^3 for solids of packing group I when packed in metal IBCs
   - 3,0 m^3 for radioactive material of Class 7

b) is designed for mechanical handling

c) is resistant to the stresses produced in handling and transport in compliance with applicable standards.

Table 1 : Space descriptions and hazardous area zones for tankers

No.	Description of spaces	Hazardous area zone
1	The interior of cargo tanks, slop tanks, any pipework of pressure-relief or other venting systems for cargo and slop tanks, pipes and equipment containing the cargo or developing flammable gases and vapours	Zone 0
2	Void space adjacent to, above or below integral cargo tanks	Zone 1
3	Hold spaces	Zone 1
4	Cofferdams and permanent (for example, segregated) ballast tanks adjacent to cargo tanks	Zone 1
5	Cargo pump rooms and cargo compressor rooms	Zone 1
6	Spaces, other than cofferdam, adjacent to and below the top of a cargo tank (for example, trunks, passageways and hold)	Zone 1
7	Spaces on open deck located in the cargo area	Zone 1
8	Areas on open deck, or semi-enclosed spaces on open deck, within 2 m of any cargo tank outlet, gas or vapour outlet, cargo manifold valve, cargo valve, cargo pipe flange, cargo pump-room ventilation outlets, and cargo tank openings for pressure release provided to permit the flow of gas or vapour mixtures caused by thermal variation	Zone 1
9	Areas on open deck, or semi-enclosed spaces on open deck, within 1 m of cargo pump entrances, cargo pump room ventilation inlet, openings into cofferdams, service spaces located in the cargo area below deck, or other zone 1 spaces	Zone 1
10	Compartments for cargo hoses	Zone 1
11	Enclosed or semi-enclosed spaces in which pipes containing cargoes are located	Zone 1
12	Spaces above deck, surrounding open or semi-enclosed spaces of zone 1	Zone 2
13	Spaces outside cargo area, below the level of the main deck, and having an opening on to the main deck or at a level less than 0,5 m above the main deck, unless: • the spaces are mechanically ventilated, or • the wall of the superstructure facing the cargo area extends from one side to the other and has doors the sills of which have a height of not less than 0,50 m	Zone 2

1.24 Large packaging

1.24.1 Large packaging means a packaging consisting of an outer packaging which contains articles or inner packagings and which:

- is designed for mechanical handling
- exceeds 400 kg net mass or 450 litres capacity but has a volume of not more than 3,0 m^3.

1.25 Limited explosion risk electrical apparatus

1.25.1 Limited explosion risk electrical apparatus means:

- an electrical apparatus which, during normal operation, does not cause sparks or exhibits surface temperatures which are above 200 °C, including e.g.:
  - three-phase squirrel cage rotor motors
  - brushless generators with contactless excitation
  - fuses with an enclosed fuse element
  - contactless electronic apparatus, or
- means an electrical apparatus with at least an enclosure protected against water jets (protection rating IP55 or higher) which during normal operation does not exhibit surface temperatures above 200 °C.

1.26 Multiple-element gas container (MEGC)

1.26.1 Multiple-element gas container (MEGC) means a unit containing elements which are linked to each other by a manifold and mounted on a frame. The following elements are considered to be elements of a multiple-element gas container: cylinders, tubes, pressure drums and bundles of cylinders as well as tanks for the carriage of gases having a capacity of more than 450 litres.

1.27 Packing group

1.27.1 Packing group means a group to which, for packing purposes, certain substances may be assigned in accordance with their degree of danger. The packing groups have the following meanings:

- packing group I: substances presenting high danger
- packing group II: substances presenting medium danger
- packing group III: substances presenting low danger.

1.28 Partly closed sampling device

1.28.1 Partly closed sampling device means a device penetrating through the boundary of the cargo tank such that during sampling only a small quantity of gaseous or liquid cargo can escape into the open air. As long as the device is not used it shall be closed completely.

1.29 Possibility of cargo heating

1.29.1 Possibility of cargo heating means a cargo heating installation in the cargo tanks using a heat insulator. The heat insulator may be heated by means of a boiler on board the tank vessel or from shore.

1.30 Protected area

1.30.1 Protected area means the whole of the following spaces on board of dry cargo vessels:

a) the cargo hold or holds of the vessel

b) the space situated above the deck, bounded:
   - athwartships, by vertical planes corresponding to the side plating
   - fore and aft, by vertical planes corresponding to the end bulkheads of the hold, and
   - upwards, by a horizontal plane 2 m above the upper level of the load, but at least by a horizontal plane 3 m above the deck.

1.31 Protective coaming, liquid-tight

1.31.1 Protective coaming, liquid-tight means a liquid-tight coaming on deck at the height of the outer cargo tank bulkhead (see Fig 1), but at a maximum distance of 0.60 m to the outer cofferdam bulkhead or hold end bulkheads, which prevents liquid from entering the fore and aft parts of the vessel. The connection between the protective coamings and the spill coaming shall be liquid tight.

1.32 Protection wall, gas- and liquid-tight

1.32.1 Protection wall, gas- and liquid-tight means a gas- and liquid-tight wall on deck at the height of the boundary plane of the cargo area preventing gases from entering areas outside the cargo area.

1.33 Residual cargo

1.33.1 Residual cargo means liquid cargo remaining in the cargo tank or cargo piping after unloading without the use of the stripping system.

1.34 Sampling opening

1.34.1 Sampling opening means a closable opening of a cargo tank with a diameter of not more than 0,30 m. When the vessel substance list according to Ch 3, Sec 1, [4.3.2] contains substances for which explosion protection is required in column (17) of Ch 3, App 3, Tab 2, it shall be deflagration safe, capable of withstanding steady burning for the most critical substance in the vessel substance list and so designed that the opening period will be as short as possible and that it cannot remain open without external intervention.

1.35 Slops

1.35.1 Slops means a mixture of cargo residues with washing water, rust or sludge which may or may not be suitable for pumping.

1.36 Service space

1.36.1 Service space means a space which is accessible during the operation of the vessel and which is neither part of the accommodation nor of the cargo tanks, with the exception of the fore peak and aft peak, provided no machinery has been installed in these latter spaces.

1.37 Temperature class

1.37.1 Temperature class means a grouping of flammable gases and vapours of flammable liquids according to their ignition temperature; and of the electrical apparatus intended to be used in the corresponding potentially explosive atmosphere according to their maximum surface temperature (see IEC publication 79 and EN 50014:1994).

1.38 Test pressure

1.38.1 Test pressure means the pressure at which a cargo tank, a residual cargo tank, a cofferdam or the loading and unloading pipes shall be tested prior to being brought into service for the first time and subsequently regularly within prescribed times.

1.39 UN Model Regulations

1.39.1 UN Model Regulations means the Model Regulations annexed to the latest edition of the Recommendations on the Transport of Dangerous Goods published by the United Nations.

1.40 UN number

1.40.1 UN number means the four-figure identification number of the substance or article taken from the United Nations Model Regulations.

APPENDIX 2 ADDITIONAL REQUIREMENTS CONCERNING CARRIAGE OF DRY CARGOES

1 Limitation of the quantities of dry cargo carried

1.1 Single hull vessels

1.1.1 Single hull vessels may carry goods of classes 1, 2, 3, 4.1, 4.2, 4.3, 5.1, 5.2, 6.1, 7, 8 and 9 only in the limited quantities set out in Tab 1.This provision also applies to pushed barges and double hull vessels not complying with Ch 3, Sec 7.

1.1.2 Where substances and articles of different divisions of Class 1 are loaded in a single vessel in conformity with the provisions for prohibition of mixed loading, the entire load shall not exceed the smallest maximum mass given in Tab 1 for the goods of the most dangerous division loaded, the order of precedence being 1.1, 1.5, 1.2, 1.3, 1.6, 1.4.

1.1.3 For pushed convoy or side-by-side formations, the quantity limitations specified in Tab 1 apply to each unit. A maximum of 1 100 000 kg is permitted for each unit.

1.1.4 When a vessel is carrying several types of dangerous goods, the total quantity shall not exceed 1.100.000 kg.

1.2 Double hull vessels

1.2.1 Double hull vessels meeting the requirements of Ch 3, Sec 7, i.e. vessels assigned additional service feature DG1, may carry goods without limitation of the quantity carried, except for:

- goods of class 1, and
- goods of classes 2, 3, 4.1, 4.2, 4.3, 5.1, 5.2, 6.1, 7. 8 and 9 for which a danger label of model N° 1 (see ADN) is required in column (5) of Ch 3, App 3, Tab 2,

for which the limitations set out in Tab 1 apply.

1.3 Handling and stowage of radioactive material

1.3.1 Fo activity limits, transport index (TI) limits and criticality safety indices (CSI), in the case of the carriage of radioactive material, see ADN Part 7, 7.1.4.14.7.

2 Additional requirements for specific classes

2.1 Additional requirements concerning Class 1

2.1.1 Definition of the divisions

division 1.1: Substances and articles which have a mass explosion hazard (a mass explosion is an explosion which affects almost the entire load virtually instantaneously)

division 1.2: Substances and articles which have a projection hazard but not a mass explosion hazard

division 1.3: Substances and articles which have a fire hazard and either a minor blast hazard, or a minor projection hazard, or both, but not a mass explosion hazard:

- combustion of which gives rise to considerable radiant heat, or
- which burn one after another, producing minor blast or projection effects, or both

division 1.4: Substances and articles which present only a slight risk of explosion in the event of ignition or initiation during carriage. The effects are largely confined to the package and no projection of fragments of appreciable size or range is to be expected. An external fire shall not cause virtually instantaneous explosion of almost the entire contents of the package

division 1.5: Very insensitive substances having a mass explosion hazard which are so insensitive that there is very little probability of initiation or of transition from burning to detonation under normal conditions of carriage. As a minimum requirement they must not explode in the external fire test

division 1.6: Extremely insensitive articles which do not have a mass explosion hazard. The articles contain only extremely insensitive substances and demonstrate a negligible probability of accidental initiation or propagation.

2.1.2 Definition of the compatibility groups

group A : Primary explosive substance

group B : Article containing a primary explosive substance and not having two or more effective protective features. Some articles, such as detonators for blasting, detonator assemblies for blasting and primers, cap-type, are included, even though they do not contain primary explosives

Table 1 : Limitation of quantities carried

Class	Substances / Articles	Total gross mass, in kg
Class 1 **(1)**	All substances of division 1.1 of compatibility group A	90 **(2)**
	All substances of division 1.1 of compatibility groups B, C, D, E, F, G, J, or L	15 000 **(3)**
	All substances of division 1.2 of compatibility groups B, C, D, E, F, G, H, J or L	50 000
	All substances of division 1.3 of compatibility groups C, G, H, J, or L	300 000 **(4)**
	All substances of division 1.4 of compatibility groups B, C, D, E, F, G, or S	1 100 000
	All substances of division 1.5 of compatibility group D	15 000 **(3)**
	All substances of division 1.6 of compatibility group N	300 000 **(4)**
	Empty packagings, uncleaned	1 100 000
Class 2	All goods for which label No. 2.1 is required	300 000
	All goods for which label No. 2.3 is required	120 000
	Other goods	1 100 000
Class 3	All goods for which label No. 6.1 is required	120 000
	Other goods	300 000
Class 4.1	UN 3221, 3222, 3231,and 3232	15 000
	- All goods of packing group I - All goods of packing group II for which label No. 6.1 is required - Self-reactive substances of types C, D, E and F **(5)** (UN 3223 to 3230 and 3233 to 3240) - Other substances of classification code SR1 **(6)** or SR2 **(7)** (UN 2956, 3241, 3242 and 3251) - Desensitized explosive substances of packing group II (UN Nos. 2907, 3319 and 3344)	120 000
	Other goods	1 100 000
Class 4.2	All goods of packing groups I or II for which label No. 6.1 is required	300 000
	Other goods	1 100 000
Class 4.3	All goods of packing groups I or II for which label No. 3, 4.1 or 6.1 is required	300 000
	Other goods	1 100 000
Class 5.1	All goods of packing groups I or II for which label No. 6.1 is required	300 000
	Other goods	1 100 000
Class 5.2	UN 3101, 3102, 3111 and 3112	15 000
	Other goods	120 000
Class 6.1	All goods of packing group I	120 000
	All goods of packing group II	300 000
	All goods carried in bulk	0
	Other goods	1 100 000
Class 7	UN 2912, 2913, 2915, 2916, 2917, 2919, 2977, 2978 and 3321 to 3333	0
	Other goods	1 100 000
Class 8	All goods of packing group I Goods of packing group II for which label No. 3 or 6.1 is required	300 000
	Other goods	1 100 000
Class 9	All goods of packing group II	300 000
	UN No. 3077, for goods carried in bulk and classified as hazardous to the aquatic environment, categories Acute 1 or Chronic 1	0
	Other goods	1 100 000

(1) Divisions and compatibility groups of substances and articles are defined in [2.1]
(2) In not less than three batches of a maximum of 30 kg each, distance between batches not less than 10,00 m
(3) In not less than three batches of a maximum of 5 000 kg each, distance between batches not less than 10,00 m
(4) Not more than 100 000 kg per hold. A wooden partition is permitted for subdividing a hold
(5) See [2.2]
(6) SR1: Self-reactive substances not requiring temperature control
(7) SR2: Self-reactive substances requiring temperature control.

group C : Propellant explosive substance or other deflagrating explosive substance or article containing such explosive substance

group D : Secondary detonating explosive substance or black powder or article containing a secondary detonating explosive substance, in each case without means of initiation and without a propelling charge, or article containing a primary explosive substance and having two or more effective protective features

group E : Article containing a secondary detonating explosive substance, without means of initiation, with a propelling charge (other than one containing a flammable liquid or gel or hypergolic liquids)

group F : Article containing a secondary detonating explosive substance with its own means of initiation, with a propelling charge (other than one containing a flammable liquid or gel or hypergolic liquids), or without a propelling charge

group G : Pyrotechnic substance, or article containing a pyrotechnic substance, or article containing both an explosive substance and an illuminating, incendiary, tear- or smoke-producing substance (other than a water-activated article or one which contains white phosphorus, phosphides, a pyrophoric substance, a flammable liquid or gel or hypergolic liquids)

group H : Article containing both an explosive substance and white phosphorus

group J : Article containing both an explosive substance and a flammable liquid or gel

group K : Article containing both an explosive substance and a toxic chemical agent

group L : Explosive substance or article containing an explosive substance and presenting a special risk (e.g. due to water activation or the presence of hypergolic liquids, phosphides or a pyrophoric substance) necessitating isolation of each type

group N : Articles containing only extremely insensitive substances

group S : Substance or article so packed or designed that any hazardous effects arising from accidental functioning are confined within the package unless the package has been degraded by fire, in which case all blast or projection effects are limited to the extent that they do not significantly hinder or prevent fire-fighting or other emergency response efforts in the immediate vicinity of the package.

2.2 Additional requirements concerning Class 4.1

2.2.1 Types of self-reactive substances

Self-reactive substances are classified into seven types according to the degree of danger they present. The types of self-reactive substances range from type A, which is not accepted for carriage in the packaging in which it is tested, to type G, which is not subject to the provisions for self-reactive substances of Class 4.1. The classification of types B to F is directly related to the maximum quantity allowed in one packaging. The principles to be applied for classification as well as the applicable classification procedures, test methods and criteria and an example of a suitable test report are given in Part II of the Manual of Tests and Criteria.

APPENDIX 3 LIST OF DANGEROUS GOODS ACCEPTED FOR CARRIAGE IN TANK VESSELS

1 General

1.1 Scope of the list

1.1.1 Tab 2 lists dangerous products permitted to be carried in tankers complying with these Rules.

1.2 Application

1.2.1 As a rule, each row ofTab 2 deals with the substance(s) covered by a specific UN number or identification number. However, when substances belonging to the same UN number or identification number have different chemical properties, physical properties and/or carriage conditions, several consecutive rows may be used for that UN number or identification number.

Each column ofTab 2 is dedicated to a specific subject as indicated in the explanatory notes given in [2]. The intersection of columns and rows (cell) contains information concerning the subject treated in that column, for the substance(s) of that row:

- the first four cells identify the substance(s) belonging to that row
- the following cells give the applicable special provisions, either in the form of complete information or in coded form. The codes cross-refer to detailed information that is to be found in the numbers indicated in the explanatory notes below. An empty cell means either that there is no special provision and that only the general requirements apply, or that the carriage restriction indicated in the explanatory notes is in force.

The applicable general requirements are not referred to in the corresponding cells.

2 Explanations concerning Table 2

2.1 Column 1: UN number or substance identification number

2.1.1 Column 1 contains the UN number or identification number of:

- the dangerous substance if the substance has been assigned its own specific UN number or identification number, or
- the generic or n.o.s. entry to which the dangerous substances not mentioned by name shall be assigned in accordance with the criteria ("decision trees") of ADN, Part 2.

2.2 Column 2: Name and description

2.2.1 Column 2 contains, in upper case characters, the name of the substance, if the substance has been assigned its own specific UN number or identification number or of the generic or n.o.s. entry to which the dangerous substances have been assigned in accordance with the criteria ("decision trees") of ADN, Part 2. This name shall be used as the proper shipping name or, when applicable, as part of the proper shipping name (see ADN, Part 3, 3.1.2 for further details on the proper shipping name).

A descriptive text in lower case characters is added after the proper shipping name to clarify the scope of the entry if the classification or carriage conditions of the substance may be different under certain conditions.

2.3 Column 3

2.3.1 Column 3a: Class

Column 3a contains the number of the Class, whose heading covers the dangerous substance. This Class number is assigned in accordance with the procedures and criteria of ADN, Part 2.

2.3.2 Column 3b: Classification code

Column 3b contains the classification code of the dangerous substance:

- for dangerous substances of Class 2, the code consists of a number and one or more letters representing the hazardous property group, which are explained in ADN, Part 2, 2.2.2.1.2 and 2.2.2.1.3
- for dangerous substances or articles of Classes 3, 4.1, 6.1 and 9, the codes are explained in ADN, Part 2, 2.2.x.1.2. (see Note 1).
- for dangerous substances or articles of Class 8, the codes are explained in ADN, Part 2, 2.2.8.1.4.1.

Note 1: x is the Class number of the dangerous substance or article, without dividing point if applicable.

2.4 Column 4: Packing group

2.4.1 Column 4 contains the packing group number(s) (I, II or III) assigned to the dangerous substance. These packing group numbers are assigned on the basis of the procedures and criteria of ADN, Part 2. Certain substances are not assigned to packing groups.

2.5 Column 5: Dangers

2.5.1 Column 5 contains information concerning the hazards inherent in the dangerous substance. These hazards are included on the basis of the danger labels of ADN, Part 3, Table A, column (5). In the case of a chemically unstable substance the code "unst." is added to the information.

In the case of a substance or mixture hazardous to the aquatic environment, the code N1, N2 or N3 is added to the information.

In the case of a substance or mixture with CMR properties, the code CMR is added to the information.

CMR is used to indicate substances with long term effects on health (carcinogenic, mutagenic or toxic to reproduction, categories 1A and 1B in accordance with the criteria of Chapters 3.5, 3.6 and 3.7 of the Globally Harmonised System of Classification and Labelling of Chemicals (GHS) as amended, published by the United Nations.

In the case of a substance or mixture that floats on the water surface, does not evaporate and is not readily soluble in water or that sinks to the bottom of the water and is not readily soluble, the code F (standing for Floater) or S (standing for Sinker), respectively, is added to the information.

Where the information is shown in brackets, only the relevant codes for the substance carried should be used.

2.6 Column 6: Type of tank vessel

2.6.1 Column 6 contains the type of tank vessel: G, C or N, where:

G : Stands for DG-G

C : Stands for DG-C

N : Stands for DG-N.

2.7 Column 7: Cargo tank design

2.7.1 Column 7 contains information concerning the design of the cargo tank:

1 = Pressure cargo tank

2 = Closed cargo tank

3 = Open cargo tank with flame arrester

4 = Open cargo tank.

2.8 Column 8: Cargo tank type

2.8.1 Column 8 contains information concerning the cargo tank type:

1 = Independent cargo tank

2 = Integral cargo tank

3 = Cargo tank with walls distinct from the outer hull

4 = Membrane tank.

2.9 Column 9: Cargo tank equipment

2.9.1 Column 9 contains information concerning the cargo tank equipment:

1 = Refrigeration system

2 = Possibility of cargo heating system

3 = Water-spray system

4 = Cargo heating system on board.

2.10 Column 10: Opening pressure of the pressure relief valve/high-velocity vent valve in kPa

2.10.1 Column 10 contains information concerning the opening pressure of the pressure relief valve/high-velocity vent valve in kPa.

2.11 Column 11: Maximum degree of filling in %

2.11.1 Column 11 contains information concerning the maximum degree of filling of cargo tanks as a percentage.

2.12 Column 12: Relative density at 20°C

2.12.1 Column 12 contains information concerning the relative density of the substance at 20°C. Data concerning the density are for information only.

2.13 Column 13: Type of sampling device

2.13.1 Column 13 contains information concerning the prescribed type of sampling device:

1 = Closed-type sampling device

2 = Partly closed-type sampling device

3 = Sampling opening.

2.14 Column 14: Pump-room below deck permitted

2.14.1 Column 14 contains an indication of whether a pump-room is permitted below deck:

yes = Pump-room below deck is permitted

no = Pump-room below deck is not permitted.

2.15 Column 15: Temperature class

2.15.1 Column 15 contains the temperature class of the substance.

2.16 Column 16: Explosion group

2.16.1 Column 16 contains the explosion group of the substance.

Note 1: Where autonomous protection systems for explosion group II B are in place, products in explosion group II A or II B, including subgroups II B3, II B2 and II B1 may be transported.

Where autonomous protection systems for explosion group II B3 are in place, products in explosion subgroups II B3, II B2 and II B1 or in explosion group II A, may be transported.

Where autonomous protection systems for explosion group II B2 are in place, products in explosion subgroups II B2 and II B1 or in explosion group II A, may be transported.

Where autonomous protection systems for explosion group II B1 are in place, products in explosion subgroups II B1 or in explosion group II A, may be transported.

2.17 Column 17: Anti-explosion protection required

2.17.1 Column 17 contains information on protection against explosions:

yes = Anti-explosion protection is required

no = Anti-explosion protection is not required.

2.18 Column 18: Equipment required

2.18.1 Column 18 contains the codes for the equipment required for the carriage of the dangerous substance:

PP : For each member of the crew, a pair of protective goggles, a pair of protective gloves, a protective suit and a suitable pair of protective shoes (or protective boots, if necessary). On board tank vessels, protective boots are required in all cases

EP : A suitable escape device for each person on board

EX : A flammable gas detector with the instructions for its use

TOX : A toximeter with the instructions for its use

A : A breathing apparatus ambient air-dependent.

2.19 Column 19: Number of cones/blue lights

2.19.1 Column 19 contains the number of cones/blue lights which should constitute the marking of the vessel during the carriage of this dangerous substance or article.

2.20 Column 20: Additional requirements / Remarks applicable to the vessel

2.20.1 Additional requirement / remark 1

Anhydrous ammonia is liable to cause stress crack corrosion in cargo tanks and cooling systems constructed of carbon-manganese steel or nickel steel.

In order to minimize the risk of stress crack corrosion, the following measures shall be taken:

a) Where carbon-manganese steel is used, cargo tanks, pressure vessels of cargo refrigeration systems and cargo piping shall be constructed of fine grained steel having a specified minimum yield stress of not more than 355 N/mm^2. The actual yield stress shall not exceed 440 N/mm^2. In addition, one of the following construction or operational measures shall be taken:
   - material with a low tensile strength shall be used (i.e. Rm < 410 N/mm^2); or
   - cargo tanks, etc., shall undergo a post-weld heat treatment for the purpose of stress relieving; or
   - the transport temperature shall preferably be maintained close to the evaporation temperature of the cargo of –33°C, but in no case above –20°C; or
   - ammonia shall contain not less than 0,1% water, by mass.

b) When carbon-manganese steel with yield stress values higher than those referred to in item a) above is used, the completed tanks, pipe sections, etc., shall undergo a post-weld heat treatment for the purpose of stress relieving.

c) Pressure vessels of the cargo refrigeration systems and the piping systems of the condenser of the cargo refrigeration system constructed of carbon-manganese steel or nickel steel shall undergo a post-weld heat treatment for the purpose of stress relieving.

d) The yield stress and the tensile strength of welding consumables may exceed only by the smallest value possible the corresponding values of the tank and piping material.

e) Nickel steels containing more than 5% nickel and carbon manganese steel which are not in compliance with the requirements of items a) and b) above may not be used for cargo tanks and piping systems intended for the transport of this substance.

f) Nickel steels containing not more than 5% nickel may be used if the transport temperature is within the limits referred to in item a) above.

g) The concentration of oxygen dissolved in the ammonia shall not exceed the values given inTab 1.

Table 1 : Maximum oxygen concentration

t, in °C	O_2, in %, by volume
≤ –30	0,90
–20	0,50
–10	0,28
0	0,16
10	0,10
20	0,05
30	0,03

2.20.2 Additional requirement / remark 2

Before loading, air shall be removed and subsequently kept away to a sufficient extent from the cargo tanks and the accessory cargo piping by the means of inert gas (see also Ch 3, Sec 1, [4.7]).

2.20.3 Additional requirement / remark 3

Arrangements shall be made to ensure that the cargo is sufficiently stabilized in order to prevent a reaction at any time during carriage. The transport document shall contain the following additional particulars:

a) name and amount of inhibitor added

b) date on which inhibitor was added and expected duration of effectiveness under normal conditions

c) any temperature limits having an effect on the inhibitor.

When stabilization is ensured solely by blanketing with an inert gas it is sufficient to mention the name of the inert gas used in the transport document.

When stabilization is ensured by another measurement, e.g. the special purity of the substance, this measurement shall be mentioned in the transport document.

2.20.4 Additional requirement / remark 4

The substance shall not be allowed to solidify; the transport temperature shall be maintained above the melting point. In instances where cargo heating installations are required, they must be so designed that polymerisation through heating is not possible in any part of the cargo tank. Where the temperature of steam-heated coils could give rise to overheating, lower-temperature indirect heating systems shall be provided.

2.20.5 Additional requirement / remark 5

This substance is liable to clog the venting piping and its fittings or the fittings of cargo tanks. Careful surveillance should be ensured. If a closed-type tank vessel cargo tank is required for the carriage of this substance and explosion protection is necessary or the substance for which explosion protection is necessary is carried in a closed cargo tank, the cargo tank shall conform to Ch 3, Sec 3, [3.6.4] or Ch 3, Sec 4, [3.6.3] or the venting piping shall conform to Ch 3, Sec 3, [3.6.5] a) or Ch 3, Sec 3, [3.6.5] b) or to Ch 3, Sec 4, [3.6.4] a) or Ch 3, Sec 4, [3.6.4] b).

This requirement does not apply when the cargo tanks and the corresponding piping are inerted in accordance with Ch 3, Sec 1, [4.7].

2.20.6 Additional requirement / remark 6

When external temperatures are below or equal to that indicated in column (20), the substance may only be carried in tank vessels equipped with a possibility of heating the cargo.

In addition, in the event of carriage in a closed cargo tank, the venting piping, the safety valves and the flame arresters shall be heatable.

The temperature of the venting piping, safety valves and flame arresters shall be kept at least above the melting point of the substance.

2.20.7 Additional requirement / remark 7

If a closed cargo tank is required to carry this substance or if the substance is carried in a closed cargo tank, the venting piping, the safety valves and the flame arresters shall be heatable.

The temperature of the venting piping, safety valves and flame arresters shall be kept at least above the melting point of the substance.

2.20.8 Additional requirement / remark 8

Double-hull spaces, double bottoms and heating coils shall not contain any water.

2.20.9 Additional requirement / remark 9

a) While the vessel is underway, an inert-gas pad shall be maintained in the ullage space above the liquid level.

b) Cargo piping and vent lines shall be independent of the corresponding piping used for other cargoes.

c) Safety valves shall be made of stainless steel.

2.20.10 Additional requirement / remark 10

(Reserved)

2.20.11 Additional requirement / remark 11

a) Stainless steel of type 416 or 442 and cast iron shall not be used for cargo tanks and pipes for loading and unloading.

b) The cargo may be discharged only by deep-well pumps or pressure inert gas displacement. Each cargo pump shall be arranged to ensure that the substance does not heat significantly if the pressure discharge line from the pump is shut off or otherwise blocked.

c) The cargo shall be cooled and maintained at temperatures below 30°C.

d) The safety valves shall be set at a pressure of not less than 550 kPa (5,5 bar) gauge pressure. Special authorization is required for the maximum setting pressure.

e) While the vessel is underway, a nitrogen pad shall be maintained in the ullage space above the cargo (see also Ch 3, Sec 1, [4.7]). An automatic nitrogen supply system shall be installed to prevent the pressure from falling below 7 kPa (0,07 bar) gauge within the cargo tank in the event of a cargo temperature fall due to ambient temperature conditions or to some other reason. In order to satisfy the demand of the automatic pressure control a sufficient amount of nitrogen shall be available on board. Nitrogen of a commercially pure quality of 99,9%, by volume, shall be used for padding. A battery of nitrogen cylinders connected to the cargo tanks through a pressure reduction valve satisfies the intention of the expression "automatic" in this context.

   The required nitrogen pad shall be such that the nitrogen concentration in the vapour space of the cargo tank is not less than 45% at any time.

f) Before loading and while the cargo tank contains this substance in a liquid or gaseous form, it shall be inerted with nitrogen.

g) The water-spray system shall be fitted with remote-control devices which can be operated from the wheelhouse or from the control station, if any.

h) Transfer arrangements shall be provided for emergency transfer of ethylene oxide in the event of an uncontrollable self-reaction.

2.20.12 Additional requirement / remark 12

a) The substance shall be acetylene free.

b) Cargo tanks which have not undergone appropriate cleaning shall not be used for the carriage of these substances if one of the previous three cargoes consisted of a substance known to promote polymerisation, such as:
   - mineral acids (e.g. sulphuric acid, hydrochloric acid, nitric acid)
   - carboxylic acids and anhydrides (e.g. formic acid, acetic acid)
   - halogenated carboxylic acids (e.g. chloroacetic acid)
   - sulphonic acids (e.g. benzen sulphonic acid)
   - caustic alkalis (e.g. sodium hydroxide, potassium hydroxide)
   - ammonia and ammonia solutions
   - amines and amine solutions
   - oxidizing substances.

c) Before loading, cargo tanks and their piping shall be efficiently and thoroughly cleaned so as to eliminate all traces of previous cargoes, except when the last cargo was constituted of propylene oxide or a mixture of ethylene oxide and propylene oxide. Special precautions shall be taken in the case of ammonia in cargo tanks built of steel other than stainless steel.

d) In all cases the efficiency of the cleaning of cargo tanks and their piping shall be monitored by means of appropriate tests or inspections to check that no trace of acid or alkaline substance remains that could present a danger in the presence of these substances.

e) The cargo tanks shall be entered and inspected prior to each loading of these substances to ensure freedom from contamination, heavy rust deposits or visible structural defects.

When these cargo tanks are fitted in type C tank vessels, with cargo tank design 1 and cargo tank type 1, and are in continuous service for these substances, such inspections shall be performed at intervals of not more than two and a half years.

When these cargo tanks are fitted in type G tank vessels, with cargo tank design 1 and cargo tank type 1, and are in continuous service for these substances, such inspections shall be performed during the periodic inspection for the class renewal.

f) Cargo tanks which have contained these substances may be reused for other cargoes once they and their piping have been thoroughly cleaned by washing and flushing with an inert gas.

g) Substances shall be loaded and unloaded in such a way that there is no release of gas into the atmosphere. If gas is returned to the shore installation during loading, the gas return system connected to the tank containing that substance shall be independent from all other cargo tanks.

h) During discharge operations, the pressure in the cargo tanks shall be maintained above 7 kPa (0,07 bar) gauge.

i) The cargo shall be discharged only by deep-well pumps, hydraulically operated submerged pumps or pressure inert gas displacement. Each cargo pump shall be arranged to ensure that the substance does not heat significantly if the pressure discharge line from the pump is shut off or otherwise blocked.

j) Each cargo tank carrying these substances shall be ventilated by a system independent from the ventilation systems of other cargo tanks carrying other substances.

k) Hose assemblies for loading and unloading shall be marked as follows:

"To be used only for the transfer of alkylene oxide."

l) (Reserved)

m) No air shall be allowed to enter the cargo pumps and cargo piping system while these substances are contained within the system.

n) Before the shore connections are disconnected, piping containing liquids or gas shall be depressurised at the shore link by means of appropriate devices.

o) The piping system for cargo tanks to be loaded with these substances shall be separate from the piping system for all other cargo tanks, including empty cargo tanks. If the piping system for the cargo tanks to be loaded is not independent, separation shall be accomplished by the removal of spool pieces, shut-off valves, other pipe sections and by fitting blank flanges at these locations. The required separation applies to all liquid pipes and vapour vent lines and any other connections which may exist such as common inert gas supply lines.

p) These substances may be carried only in accordance with cargo handling plans that have been approved by a competent authority.

Each loading arrangement shall be shown on a separate cargo handling plan. Cargo handling plans shall show the entire cargo piping system and the locations for installations of blank flanges needed to meet the above piping separation requirements. A copy of each cargo handling plan shall be kept on board. Reference to the approved cargo handling plans shall be included in the certificate of approval.

q) Before loading of these substances and before carriage is resumed a qualified person approved by the competent authority shall certify that the prescribed separation of the piping has been effected; this certificate shall be kept on board. Each connection between a blank flange and a shut-off valve in the piping shall be fitted with a sealed wire to prevent the flange from being disassembled inadvertently.

r) During the voyage, the cargo shall be covered with nitrogen. An automatic nitrogen make-up system shall be installed to prevent the cargo tank pressure from falling below 7 kPa (0,07 bar) gauge in the event of a cargo temperature fall due to ambient temperature conditions or to some other reason. Sufficient nitrogen shall be available on board to satisfy the demand of automatic pressure control. Nitrogen of commercially pure quality of 99,9%, by volume, shall be used for padding. A battery of nitrogen cylinders connected to the cargo tanks through a pressure reduction valve satisfies the intention of the expression "automatic" in this context.

s) The vapour space of the cargo tanks shall be checked before and after each loading operation to ensure that the oxygen content is 2%, by volume, or less.

t) Loading flow

The loading flow (L_R) of cargo tank shall not exceed the following value:

$L_R = 3600\ U/t\ (m^3/h)$

where:

U : Free volume, in m^3 during loading for the activation of the overflow prevention system

T : Time, in s, required between the activation of the overflow prevention system and the complete stop of the flow of cargo into the cargo tank.

The time is the sum of the partial times needed for successive operations, e.g. reaction time of the service personnel, the time needed to stop the pumps and the time needed to close the shut-off valves.

The loading flow shall also take account of the design pressure of the piping system.

2.20.13 Additional requirement / remark 13

If no stabilizer is supplied or if the supply is inadequate, the oxygen content in the vapour phase shall not exceed 0,1%. Overpressure must be constantly maintained in cargo tanks. This requirement applies also to voyages on ballast or empty with uncleaned cargo tanks between cargo transport operations.

2.20.14 Additional requirement / remark 14

The following substances may not be carried in a DG-N vessel:

- substances with self-ignition temperatures ≤ 200°C
- substances with a flash point < 23°C and an explosion range > 15 percentage points
- mixtures containing halogenated hydrocarbons
- mixtures containing more than 10% benzene
- substances and mixtures carried in a stabilized state.

2.20.15 Additional requirement / remark 15

Provision shall be made to ensure that alkaline or acidic substances such as sodium hydroxide solution or sulphuric acid do not contaminate this cargo.

2.20.16 Additional requirement / remark 16

If there is a possibility of a dangerous reaction such as polymerisation, decomposition, thermal instability or evolution of gases resulting from local overheating of the cargo in either the cargo tank or associated piping system, this cargo shall be loaded and carried adequately segregated from other substances the temperature of which is sufficiently high to initiate such reaction. Heating coils inside cargo tanks carrying this substance shall be blanked off or secured by equivalent means.

2.20.17 Additional requirement / remark 17

The melting point of the cargo shall be shown in the transport documents.

2.20.18 Additional requirement / remark 18

(Reserved)

2.20.19 Additional requirement / remark 19

Provision shall be made to ensure that the cargo does not come into contact with water. The following additional requirements apply:

Carriage of the cargo is not permitted in cargo tanks adjacent to slop tanks or cargo tanks containing ballast water, slops or any other cargo containing water. Pumps, piping and vent lines connected to such tanks shall be separated from similar equipment of tanks carrying these substances. Pipes from slop tanks or ballast water pipes shall not pass through cargo tanks containing this cargo unless they are encased in a tunnel.

2.20.20 Additional requirement / remark 20

The maximum permitted transport temperature given in column (20) shall not be exceeded.

2.20.21 Additional requirement / remark 21

(Reserved)

2.20.22 Additional requirement / remark 22

The relative density of the cargo shall be shown in the transport document.

2.20.23 Additional requirement / remark 23

The instrument for measuring the pressure of the vapour phase in the cargo tank shall activate the alarm when the internal pressure reaches 40 kPa (0,4 bar). The water-spray system shall immediately be activated and remain in operation until the internal pressure drops to 30 kPa (0,3 bar).

2.20.24 Additional requirement / remark 24

Substances having a flash-point above 61°C which are handed over for carriage or which are carried heated within a limiting range of 15 K below their flash-point shall be carried under the conditions of substance number 9001.

2.20.25 Additional requirement / remark 25

Type 3 cargo tank may be used for the carriage of this substance provided that the construction of the cargo tank has been accepted by a recognized classification society for the maximum permitted transport temperature.

2.20.26 Additional requirement / remark 26

Type 2 cargo tank may be used for the carriage of this substance provided that the construction of the cargo tank has been accepted by a recognized classification society for the maximum permitted transport temperature.

2.20.27 Additional requirement / remark 27

The requirements of ADN, Part 3, 3.1.2.8.1 are applicable.

2.20.28 Additional requirement / remark 28

a) When UN 2448 SULPHUR MOLTEN is carried, the forced ventilation of the cargo tanks shall be brought into service at latest when the concentration of hydrogen sulphide reaches 1,0%, by volume.

b) When during the carriage of UN 2448 SULPHUR MOLTEN, the concentration of hydrogen sulphide exceeds 1,85%, the boat master shall immediately notify the nearest competent authority.

   When a significant increase in the concentration of hydrogen sulphide in a hold space leads it to be supposed that the sulphur has leaked, the cargo tanks shall be unloaded as rapidly as possible. A new load may only be taken on board once the authority which issued the certificate of approval has carried out a further inspection.

c) When UN 2448 SULPHUR MOLTEN is carried, the concentration of hydrogen sulphide shall be measured in the vapour phase of the cargo tanks and concentrations of sulphur dioxide and hydrogen sulphide in the hold spaces.

d) The measurements prescribed in item c) shall be made every eight hours. The results of the measurements shall be recorded in writing.

2.20.29 Additional requirement / remark 29

Deleted.

2.20.30 Additional requirement / remark 30

When these substances are carried, the hold spaces of open type N tank vessels may contain auxiliary equipment.

2.20.31 Additional requirement / remark 31

When these substances are carried, the vessel shall be equipped with a rapid blocking valve placed directly on the shore connection.

2.20.32 Additional requirement / remark 32

In the case of transport of this substance, the following additional requirements are applicable:

a) The outside of the cargo tanks shall be equipped with insulation of low flammability. This insulation should be strong enough to resist shocks and vibration. Above deck, the insulation should be protected by a covering.

   The outside temperature of this covering should not exceed 70°C.

b) The spaces containing the cargo tanks should be provided with ventilation. Connections for forced ventilation should be fitted.

c) The cargo tanks should be equipped with forced ventilation installations which, in all transport conditions, will reliably keep the concentration of hydrogen sulphide above the liquid phase below 1,85% by volume.

   The ventilation installations should be fitted in such a way as to prevent the deposit of the goods to be transported.

   The exhaust line of the ventilation should be fitted in such a way as not to present a risk to personnel.

d) The cargo tank and the hold spaces should be fitted with outlets and piping to allow gas sampling.

e) The outlets of the cargo tanks shall be situated at a height such that for a trim of 2º and a list of 10º, no sulphur can escape. All the outlets shall be situated above the deck in the open air. Each outlet shall be equipped with a satisfactory fixed closing mechanism.

   One of these mechanisms shall be capable of being opened for slight overpressure within the tank.

f) The pipes for loading and unloading shall be equipped with adequate insulation. They shall be capable of being heated.

g) The heat transfer fluid shall be such that in the event of a leak into a tank, there is no risk of a dangerous reaction with the sulphur.

2.20.33 Additional requirement / remark 33

The following provisions are applicable to transport of this substance.

Note 1: **CONSTRUCTION REQUIREMENTS**

a) Hydrogen peroxide solutions may be transported only in cargo tanks equipped with deep-well pumps.

b) Cargo tanks and their equipment should be constructed of solid stainless steel of a type appropriate to hydrogen peroxide solutions (for example, 304, 304L, 316, 316L or 316 Ti). None of the non-metallic materials used for the system of cargo tanks shall be attacked by hydrogen peroxide solutions or cause the decomposition of the substance.

c) The temperature sensors shall be installed in the cargo tanks directly under the deck and at the bottom. Remote temperature read-outs and monitoring shall be provided for in the wheelhouse.

d) Fixed oxygen monitors (or gas-sampling lines) shall be provided in the areas adjacent to the cargo tanks so that leaks in such areas can be detected. Account shall be taken of the increased flammability arising from the increased presence of oxygen. Remote read-outs, continuous monitoring (if the sampling lines are used, intermittent monitoring will suffice) and visible and audible alarms similar to those for the temperature sensors shall also be located in the wheelhouse. The visible and audible alarms shall be activated if the oxygen concentration in these void spaces exceeds 30% by volume. Two additional oxygen monitors shall also be available.

e) The cargo tank venting systems which are equipped with filters shall be fitted with pressure/vacuum relief valves appropriate to closed-circuit ventilation and with an extraction installation should cargo tank pressure rise rapidly as a result of an uncontrolled breakdown (see item m) below). These air supply and extraction systems shall be so designed that water cannot enter the cargo tanks. In designing the emergency extraction installation account shall be taken of the design pressure and the size of the cargo tanks.

f) A fixed water-spray system shall be provided for diluting and washing away any hydrogen peroxide solutions spilled onto the deck. The area covered by the jet of water shall include the shore connections and the deck containing the cargo tanks designated for carrying hydrogen peroxide solutions.

   The following minimum requirements shall be complied with:

   1) The substance shall be diluted from the original concentration to a 35% concentration within five minutes from the spillage on the deck

   2) The rate and estimated size of the spill should be determined in the light of the maximum permissible loading or unloading rates, the time required to halt the spillage in the event of tank overfill or a pipe or hose assembly failure, and the time necessary to begin application of dilution water with actuation of the alarm at the cargo control location or in the wheelhouse.

g) The outlets of the pressure valves should be situated at least 2,00 metres from the walkways if they are less than 4,00 metres from the walkway.

h) A temperature sensor shall be installed by each pump to make it possible to monitor the temperature of the cargo during unloading and detect any overheating due to defective operation of the pump.

Note 2: **SERVICING REQUIREMENTS: CARRIER (Items i to l)**

i) Hydrogen peroxide solutions may only be carried in cargo tanks which have been thoroughly cleaned and passivated, in accordance with the procedure described in item j) below, of all traces of previous cargoes, their vapours or their ballast waters. A certificate stating that the procedure described in item j) has been duly complied with must be carried on board.

Particular care in this respect is essential to ensure the safe carriage of hydrogen peroxide solutions:

1) When a hydrogen peroxide solution is being carried, no other cargo may be carried simultaneously

2) Tanks which have contained hydrogen peroxide solutions may be reused for other cargoes after they have been cleaned by persons or companies approved for this purpose by the competent authority

3) In the design of the cargo tanks, efforts must be made to keep to a minimum any internal tank structure, to ensure free draining, no entrapment and ease of visual inspection.

j) Procedures for inspection, cleaning, passivation and loading for the transport of hydrogen peroxide solutions with a concentration of 8 to 60 per cent in cargo tanks which have previously carried other cargoes.

Before their reuse for the transport of hydrogen peroxide solutions, cargo tanks which have previously carried cargoes other than hydrogen peroxide must be inspected, cleaned and passivated. The procedures described in items 1) to 7) below for inspection and cleaning apply to stainless steel cargo tanks. The procedure for passivating stainless steel is described in item 8). Failing any other instructions, all the measures apply to cargo tanks and to all their structures which have been in contact with other cargoes.

1) After unloading of the previous cargo, the cargo tank must be degassed and inspected for any remaining traces, carbon residues and rust

2) The cargo tanks and their equipment must be washed with clear filtered water. The water used must be at least of the same quality as drinking water and have a low chlorine content

3) Traces of the residues and vapours of the previous cargo must be removed by the steam cleaning of the cargo tanks and their equipment

4) The cargo tanks and their equipment must then be rewashed with clear water of the quality specified in item 2) above and dried in filtered, oil-free air

5) Samples must be taken of the atmosphere in the cargo tanks and these must be analysed for their content of organic gases and oxygen

6) The cargo tank must be reinspected for any traces of the previous cargo, carbon residues or rust or odours of the previous cargo

7) If the inspection and the other measures point to the presence of traces of the previous cargo or of its gases, the measures described in items 2) to 4) above must be repeated

8) Stainless steel cargo tanks and their structures which have contained cargoes other than hydrogen peroxide solutions and which have been repaired must, regardless whether or not they have previously been passivated, be cleaned and passivated in accordance with the following procedure:

- the new weld seams and other repaired parts must be cleaned and scrubbed with stainless steel brushes, graving tools, sandpaper and polishers. Rough surfaces must be made smooth and a final polishing must be carried out
- fatty and oily residues must be removed with the use of organic solvents or appropriate cleaning products diluted with water. The use of chlorinated products shall be avoided because these might seriously interfere with the passivation procedure
- any residues that have been removed must be eliminated and the tanks must then be washed.

k) During the transfer of the hydrogen peroxide solutions, the related piping system must be separated from all other systems. Loading and unloading piping used for the transfer of hydrogen peroxide solutions must be marked as follows:

"For Hydrogen Peroxide

Solution Transfer only"

l) If the temperature in the cargo tanks rises above 35°C, visible and audible alarms shall activate in the wheelhouse.

Note 3: **SERVICING REQUIREMENTS: MASTER (Item m)**

m) If the temperature rise exceeds 4°C for 2 hours or if the temperature in the cargo tanks exceeds 40°C, the master must contact the consignor directly, with a view to taking any action that might be necessary.

Note 4: **SERVICING REQUIREMENTS: FILLER (Items n and o)**

n) Hydrogen peroxide solutions must be stabilized to prevent decomposition. The manufacturer must provide a stabilization certificate which must be carried on board and must specify:

1) The disintegration date of the stabilizer and the duration of its effectiveness

2) Actions to be taken should the product become unstable during the voyage.

o) Only those hydrogen peroxide solutions which have a maximum decomposition rate of 1,0 per cent per year at 25°C may be carried. A certificate from the filler stating that the product meets this standard must be presented to the master and kept on board.

An authorized representative of the manufacturer must be on board to monitor the transfer operations and to test the stability of the hydrogen peroxide solutions to be transported. He shall certify to the master that the cargo has been loaded in a stable condition.

2.20.34 Additional requirement / remark 34

For type N carriage, the flanges and stuffing boxes of the loading and unloading piping must be fitted with a protection device to protect against splashing.

2.20.35 Additional requirement / remark 35

Only an indirect system for the cargo refrigerating system is permitted for this substance. Direct or combined systems are not permitted.

2.20.36 Additional requirement / remark 36

Merged with remark 35.

2.20.37 Additional requirement / remark 37

For this substance, the cargo tank system shall be capable of resisting the vapour pressure of the cargo at higher ambient temperatures whatever the system that has been adopted for treating the boil-off gas.

2.20.38 Additional requirement / remark 38

When the initial melting point of these mixtures in accordance with standard ASTM D86-01 is above 60°C, the transport requirements for packing group II are applicable.

2.20.39 Additional requirement / remark 39

a) The joints, outlets, closing devices and other technical equipment shall be of such a sort that there cannot be any leakage of carbon dioxide during normal transport operations (cold, fracturing of materials, freezing of fixtures, run-off outlets etc.).

b) The loading temperature (at the loading station) shall be mentioned in the transport document.

c) An oxygen meter shall be kept on board, together with instructions on its use which can be read by everyone on board. The oxygen meter shall be used as a testing device when entering holds, pump rooms, areas situated at depth and when work is being carried out on board.

d) At the entry of accommodation and in other places where the crew may spend time there shall be a measuring device which lets off an alarm when the oxygen level is too low or when the CO_2 level is too high.

e) The loading temperature (established after loading) and the maximum duration of the journey shall be mentioned in the transport document.

2.20.40 Additional requirement / remark 40

Deleted.

2.20.41 Additional requirement / remark 41

n-BUTYLBENZENE is assigned to the entry UN No. 2709 BUTYLBENZENES (n-BUTYLBENZENE).

2.20.42 Additional requirement / remark 42

Loading of refrigerated liquefied gases shall be carried out in such a manner as to ensure that unsatisfactory temperature gradients do not occur in any cargo tank, piping or other ancillary equipment. When determining the holding time, it shall be assured that the degree of filling does not exceed 98% in order to prevent the safety valves from opening when the tank is in liquid full condition. When refrigerated liquefied gases are carried using a system according to Ch 3, Sec 2, [5.1.1], item 2) or item 3), a refrigeration system is not required.

2.20.43 Additional requirement / remark 43

It may be that the mixture has been classified as a floater as a precautionary measure, because some of its components meet the relevant criteria.

2.20.44 Additional requirement / remark 44

A substance shall only be assigned to this entry where there is measurement data or verified information in accordance with IEC 60079-20-1 or equivalent that allows for an assignment to subgroup II B3, II B2 or II B1 of explosion group II B or explosion group II A.

2.20.45 Additional requirement / remark 45

When this substance is received from seagoing vessels as waste related to the operation of the vessel, appropriate measures shall taken on board the vessels to avoid or minimise, to the extent possible, the exposure of personnel on board to gas/air mixtures escaping from the cargo tanks of the receiving vessel during loading and to ensure the protection of personnel on board during such activities. Appropriate personal protective equipment shall be made available to the employees in question and shall be worn for the duration of the increased exposure.

Table 2 : List of dangerous goods

UN No. or substance identification No.	Name and description	Class	Classification code	Packing group	Danger labels	Type of tank vessel	Cargo tank design	Cargo tank type	Cargo tank equipment	Opening pressure of the pressure relief valve / high-velocity vent valve in kPa	Maximum degree of filling in %	Relative density at 20°C	Type of sampling device	Pump-room below deck permitted	Temperature class	Explosion group	Anti-explosion protection required	Equipment required	Number of cones/blue lights	Additional requirements / Remarks
(1)	(2)	3(a)	3(b)	(4)	(5)	(6)	(7)	(8)	(9)	(10)	(11)	(12)	(13)	(14)	(15)	(16)	(17)	(18)	(19)	(20)
1005	AMMONIA, ANHYDROUS	2	2TC		2.3+8+N1	G	1	1	3		91		1	no	T1 **(12)**	II A	yes	PP, EP, EX, TOX, A	2	1; 2; 31
1010	BUTADIENES (1,2-BUTADIENE), STABILIZED	2	2F		2.1+unst.	G	1	1			91		1	no	T2 **(12)**	II B **(4)**	yes	PP, EX, A	1	2; 3; 31
1010	BUTADIENES (1,3-BUTADIENE), STABILIZED	2	2F		2.1+unst.+CMR	G	1	1			91		1	no	T2 **(12)**	II B **(4)**	yes	PP, EP, EX, TOX, A	1	2; 3; 31
1010	BUTADIENE STABILIZED or BUTADIENES AND HYDROCARBON MIXTURE, STABILIZED, having a vapour pressure at 70°C not exceeding 1.1 MPa (11 bar) and a density at 50°C not lower than 0.525 kg/l (contains less than 0,1% 1.3-butadiene)	2	2F		2.1+unst.	G	1	1			91		1	no	T2 **(12)**	II B **(4)**	yes	PP, EX, A	1	2; 3; 31
1010	BUTADIENE STABILIZED or BUTADIENES AND HYDROCARBON MIXTURE, STABILIZED, having a vapour pressure at 70°C not exceeding 1.1 MPa (11 bar) and a density at 50°C not lower than 0.525 kg/l (with 0,1% or more 1.3-butadiene)	2	2F		2.1+unst.+CMR	G	1	1			91		1	no	T2 **(12)**	II B **(4)**	yes	PP, EP, EX, TOX, A	1	2; 3; 31
1010	1,2-BUTADIENE, STABILIZED, REFRIGERATED	2	3F		2.1+unst.	G	2	4	1; 3		95		1	no	T2 **(12)**	II B **(4)**	yes	PP, EX, A	1	2; 3; 31
1010	1,3-BUTADIENE, STABILIZED, REFRIGERATED	2	3F		2.1+unst.+CMR	G	2	4	1; 3		95		1	no	T2 **(12)**	II B2	yes	PP, EP, EX, TOX, A	1	2; 3; 31

UN No. or substance identification No.	Name and description	Class	Classification code	Packing group	Danger labels	Type of tank vessel	Cargo tank design	Cargo tank type	Cargo tank equipment	Opening pressure of the pressure relief valve / high-velocity vent valve in kPa	Maximum degree of filling in %	Relative density at 20°C	Type of sampling device	Pump-room below deck permitted	Temperature class	Explosion group	Anti-explosion protection required	Equipment required	Number of cones/blue lights	Additional requirements / Remarks
(1)	(2)	3(a)	3(b)	(4)	(5)	(6)	(7)	(8)	(9)	(10)	(11)	(12)	(13)	(14)	(15)	(16)	(17)	(18)	(19)	(20)
1010	BUTADIENES STABILIZED or BUTADIENES AND HYDROCARBON MIXTURE, STABILIZED, REFRIGERATED, having a vapour pressure at 70 °C not exceeding 1.1 MPa (11 bar) and a density at 50 °C not lower than 0.525 kg/l (contains less than 0.1% 1.3-butadiene)	2	3F		2.1+unst.	G	2	4	1; 3		95		1	no	T2 **(12)**	II B2	yes	PP, EX, A	1	2; 3; 31
1010	BUTADIENES, STABILIZED or BUTADIENES AND HYDROCARBON MIXTURE, STABILIZED, REFRIGERATED, having a vapour pressure at 70° C not exceeding 1.1 MPa (11 bar) and a density at 50° C not lower than 0.525 kg/l, (with 0.1% or more 1.3-butadiene)	2	3F		2.1+unst.+CMR	G	2	4	1; 3		95		1	no	T2 **(12)**	II B2	yes	PP, EP, EX, TOX, A	1	2; 3; 31
1011	BUTANE (contains less than 0,1% 1.3-butadiene)	2	2F		2.1	G	1	1			91		1	no	T2 **(12)**	II A	yes	PP, EX, A	1	2; 31
1011	BUTANE (with 0,1% or more 1.3-butadiene)	2	2F		2.1+CMR	G	1	1			91		1	no	T2 **(12)**	II A	yes	PP, EP, EX, TOX, A	1	2; 31
1011	BUTANE, REFRIGERATED, (contains less than 0.1% 1.3-butadiene)	2	3F		2.1	G	2	4	1; 3		95		1	no	T2 **(12)**	II A	yes	PP, EX, A	1	2; 31
1011	BUTANE, REFRIGERATED, (with 0.1% or more 1.3-butadiene)	2	3F		2.1+CMR	G	2	4	1; 3		95		1	no	T2 **(12)**	II A	yes	PP, EP, EX, TOX, A	1	2; 31
1012	1-BUTYLENE	2	2F		2.1	G	1	1			91		1	no	T2 **(12)**	II A	yes	PP, EX, A	1	2; 31
1012	1-BUTYLENE, REFRIGERATED	2	3F		2.1	G	2	4	1; 3		95		1	no	T2 **(12)**	II A	yes	PP, EX, A	1	2; 31
1020	CHLOROPENTAFLUORO-ETHANE (refrigerant gas R 115)	2	2A		2.2	G	1	1			91		1	no			no	PP	0	31

UN No. or substance identification No.	Name and description	Class	Classification code	Packing group	Danger labels	Type of tank vessel	Cargo tank design	Cargo tank type	Cargo tank equipment	Opening pressure of the pressure relief valve / high-velocity vent valve in kPa	Maximum degree of filling in %	Relative density at 20°C	Type of sampling device	Pump-room below deck permitted	Temperature class	Explosion group	Anti-explosion protection required	Equipment required	Number of cones/blue lights	Additional requirements / Remarks
(1)	(2)	3(a)	3(b)	(4)	(5)	(6)	(7)	(8)	(9)	(10)	(11)	(12)	(13)	(14)	(15)	(16)	(17)	(18)	(19)	(20)
1020	CHLOROPENTAFLUORO-ETHANE, REFRIGERATED, (REFRIGERANT GAS R 115)	2	3A		2.2	G	2	4	1; 3		95		1	no			no	PP	0	31
1030	1,1-DIFLUOROETHANE (REFRIGERANT GAS R 152a)	2	2F		2.1	G	1	1			91		1	no	T1 **(12)**	II A	yes	PP, EX, A	1	2; 31
1030	1,1-DIFLUOROETHANE, REFRIGER-ATED, (REFRIGERANT GAS R 152a)	2	3F		2.1	G	2	4	1; 3		95		1	no	T1 **(12)**	II A	yes	PP, EX, A	1	2; 31
1033	DIMETHYL ETHER	2	2F		2.1	G	1	1			91		1	no	T3	II B	yes	PP, EX, A	1	2; 31
1033	DIMETHYL ETHER, REFRIGERATED	2	3F		2.1	G	2	4	1; 3		95		1	no	T3	II B2	yes	PP, EX, A	1	2; 31
1038	ETHYLENE, REFRIGERATED LIQUID	2	3F		2.1	G	1	1	1		95		1	no	T1 **(12)**	II B	yes	PP, EX, A	1	2; 31; 42
1038	ETHYLENE, REFRIGERATED LIQUID	2	3F		2.1	G	1	1	1		95		1	no	T1 **(12)**	II B3	yes	PP, EX, A	1	2; 31; 42
1038	ETHYLENE, REFRIGERATED LIQUID	2	3F		2.1	G	2	4	1; 3		95		1	no	T1 **(12)**	II B3	yes	PP, EX, A	1	2; 31; 42
1040	ETHYLENE OXIDE WITH NITROGEN up to a total pressure of 1 MPa (10 bar) at 50°C	2	2TF		2.3+2.1	G	1	1			91		1	no	T2 **(12)**	II B	yes	PP, EP, EX, TOX, A	2	2; 3; 11; 31
1055	ISOBUTYLENE	2	2F		2.1	G	1	1			91		1	no	T2 **(1)** **(12)**	II A	yes	PP, EX, A	1	2; 31
1055	ISOBUTYLENE, REFRIGERATED	2	3F		2.1	G	2	4	1; 3		95		1	no	T2 **(1)** **(12)**	II A	yes	PP, EX, A	1	2; 31
1063	METHYL CHLORIDE (REFRIGERANT GAS R 40)	2	2F		2.1	G	1	1			91		1	no	T1 **(12)**	II A	yes	PP, EX, A	1	2; 31
1063	METHYL CHLORIDE, REFRIGERATED (REFRIGERANT GAS R 40)	2	3F		2.1	G	2	4	1; 3		95		1	no	T1 **(12)**	II A	yes	PP, EX, A	1	2; 31

UN No. or substance identification No.	Name and description	Class	Classification code	Packing group	Danger labels	Type of tank vessel	Cargo tank design	Cargo tank type	Cargo tank equipment	Opening pressure of the pressure relief valve / high-velocity vent valve in kPa	Maximum degree of filling in %	Relative density at 20°C	Type of sampling device	Pump-room below deck permitted	Temperature class	Explosion group	Anti-explosion protection required	Equipment required	Number of cones/blue lights	Additional requirements / Remarks
(1)	(2)	3(a)	3(b)	(4)	(5)	(6)	(7)	(8)	(9)	(10)	(11)	(12)	(13)	(14)	(15)	(16)	(17)	(18)	(19)	(20)
1077	PROPYLENE	2	2F		2.1	G	1	1			91		1	no	T1 **(12)**	II A	yes	PP, EX, A	1	2; 31
1077	PROPYLENE, REFRIGERATED	2	3F		2.1	G	2	4	1; 3		95		1	no	T1 **(12)**	II A	yes	PP, EX, A	1	2; 31
1083	TRIMETHYLAMINE, ANHYDROUS	2	2F		2.1	G	1	1			91		1	no	T4	II A	yes	PP, EX, A	1	2; 31
1086	VINYL CHLORIDE, STABILIZED	2	2F		2.1+unst.	G	1	1			91		1	no	T2 **(12)**	II A	yes	PP, EX, A	1	2; 3; 13; 31
1086	VINYL CHLORIDE, STABILIZED, REFRIGERATED	2	3F		2.1+unst.	G	2	4	1; 3		95		1	no	T2 **(12)**	II A	yes	PP, EX, A	1	2; 3; 13; 31
1088	ACETAL	3	F1	II	3	N	2	2		10	97	0.83	3	yes	T3	II B **(4)**	yes	PP, EX, A	1	
1089	ACETALDEHYDE (ethanal)	3	F1	I	3+N3	C	1	1			95	0.78	1	yes	T4	II A	yes	PP, EX, A	1	
1090	ACETONE	3	F1	II	3	N	2	2		10	97	0.79	3	yes	T1 **(12)**	II A	yes	PP, EX, A	1	
1092	ACROLEINE, STABILIZED	6.1	TF1	I	6.1+3+unst.+ N1	C	2	2	3	50	95	0.84	1	no	T3 **(2)**	II B	yes	PP, EP, EX, TOX, A	2	2; 3; 5; 23
1093	ACRYLONITRILE, STABILIZED	3	FT1	I	3+6.1+unst.+ N2+CMR	C	2	2	3	50	95	0.8	1	no	T1 **(12)**	II B	yes	PP, EP, EX, TOX, A	2	3; 5; 23
1098	ALLYL ALCOHOL	6.1	TF1	I	6.1+3+N1	C	2	2		40	95	0.85	1	no	T2 **(12)**	II B	yes	PP, EP, EX, TOX, A	2	
1100	ALLYL CHLORIDE	3	FT1	I	3+6.1+N1	C	2	2	3	50	95	0.94	1	no	T2 **(12)**	II A	yes	PP, EP, EX, TOX, A	2	23
1105	PENTANOLS (n- PENTANOL)	3	F1	III	3	N	3	2			97	0.81	3	yes	T2 **(12)**	II A	yes	PP, EX, A	0	
1106	AMYLAMINE (n-AMYLAMINE)	3	FC	II	3+8	C	2	2		40	95	0.76	2	yes	T4 **(3)**	II A **(6)**	yes	PP, EP, EX, A	1	

UN No. or substance identification No.	Name and description	Class	Classification code	Packing group	Danger labels	Type of tank vessel	Cargo tank design	Cargo tank type	Cargo tank equipment	Opening pressure of the pressure relief valve / high-velocity vent valve in kPa	Maximum degree of filling in %	Relative density at 20°C	Type of sampling device	Pump-room below deck permitted	Temperature class	Explosion group	Anti-explosion protection required	Equipment required	Number of cones/blue lights	Additional requirements / Remarks
(1)	(2)	3(a)	3(b)	(4)	(5)	(6)	(7)	(8)	(9)	(10)	(11)	(12)	(13)	(14)	(15)	(16)	(17)	(18)	(19)	(20)
1107	AMYL CHLORIDES (l-CHLOROPEN-TANE)	3	F1	II	3	C	2	2		40	95	0.88	2	yes	T3	II A	yes	PP, EX, A	1	
1107	AMYL CHLORIDES (1-CHLORO-3-METHYLBUTANE)	3	F1	II	3	C	2	2		45	95	0.89	2	yes	T3	II A	yes	PP, EX, A	1	
1107	AMYL CHLORIDES (2-CHLORO-2-METHYLBUTANE)	3	F1	II	3	C	2	2		50	95	0.87	2	yes	T2 **(12)**	II A	yes	PP, EX, A	1	
1107	AMYL CHLORIDES (1-CHLORO-2,2-DIMETHYL- PROPANE)	3	F1	II	3	C	2	2		50	95	0.87	2	yes	T3 **(2)**	II A	yes	PP, EX, A	1	
1107	AMYL CHLORIDES	3	F1	II	3	C	1	1			95	0.9	1	yes	T3 **(2)**	II A	yes	PP, EX, A	1	27
1108	1-PENTENE (n-amylene)	3	F1	I	3+N3	N	1	1			97	0.64	1	yes	T3	II B **(4)**	yes	PP, EX, A	1	
1114	BENZENE	3	F1	II	3+N3+CMR	C	2	2	3	50	95	0.88	2	yes	T1 **(12)**	II A	yes	PP, EP, EX, TOX, A	1	6:+10°C; 17; 23
1120	BUTANOLS (tert- BUTYLALCOHOL)	3	F1	II	3	N	2	2	2	10	97	0.79	3	yes	T1 **(12)**	II A **(6)**	yes	PP, EX, A	1	7; 17
1120	BUTANOLS (sec-BUTYLALCOHOL)	3	F1	III	3	N	3	2			97	0.81	3	yes	T2 **(12)**	II A	yes	PP, EX, A	0	
1120	BUTANOLS (n- BUTYL ALCOHOL)	3	F1	III	3	N	3	2			97	0.81	3	yes	T2 **(12)**	II B	yes	PP, EX, A	0	
1123	BUTYL ACETATES (sec-BUTYLACETATE)	3	F1	II	3	N	2	2		10	97	0.86	3	yes	T2 **(12)**	II A **(6)**	yes	PP, EX, A	1	
1123	BUTYL ACETATES (n-BUTYL ACETATE)	3	F1	III	3+N3	N	3	2			97	0.86	3	yes	T2 **(12)**	II A	yes	PP, EX, A	0	
1125	n-BUTYLAMINE	3	FC	II	3+8+N3	C	2	2	3	50	95	0.75	2	yes	T2 **(12)**	II A	yes	PP, EP, EX, A	1	23

UN No. or substance identification No.	Name and description	Class	Classification code	Packing group	Danger labels	Type of tank vessel	Cargo tank design	Cargo tank type	Cargo tank equipment	Opening pressure of the pressure relief valve / high-velocity vent valve in kPa	Maximum degree of filling in %	Relative density at 20°C	Type of sampling device	Pump-room below deck permitted	Temperature class	Explosion group	Anti-explosion protection required	Equipment required	Number of cones/blue lights	Additional requirements / Remarks
(1)	(2)	3(a)	3(b)	(4)	(5)	(6)	(7)	(8)	(9)	(10)	(11)	(12)	(13)	(14)	(15)	(16)	(17)	(18)	(19)	(20)
1127	CHLOROBUTANES (1-CHLOROBUTANE)	3	F1	II	3	C	2	2	3	50	95	0.89	2	yes	T3	II A	yes	PP, EX, A	1	23
1127	CHLOROBUTANES (2-CHLOROBUTANE)	3	F1	II	3	C	2	2	3	50	95	0.87	2	yes	T3	II A	yes	PP, EX, A	1	23
1127	CHLOROBUTANES (1-CHLORO-2-METHYLPROPANE)	3	F1	II	3	C	2	2	3	50	95	0.88	2	yes	T3	II A	yes	PP, EX, A	1	23
1127	CHLOROBUTANES (2-CHLORO-2-METHYL- PROPANE)	3	F1	II	3	C	2	2	3	50	95	0.84	2	yes	T1 **(12)**	II A	yes	PP, EX, A	1	23
1127	CHLOROBUTANES	3	F1	II	3	C	1	1			95	0.89	1	yes	T4 **(3)**	II A	yes	PP, EX, A	1	27
1129	BUTYRALDEHYDE (n-BUTYRALDEHYDE)	3	F1	II	3+N3	C	2	2	3	50	95	0.8	2	yes	T4	II A	yes	PP, EX, A	1	15; 23
1131	CARBON DISULPHIDE	3	FT1	I	3+6.1+N2	C	2	2	3	50	95	1.26	1	no	T6	II C	yes	PP, EP, EX, TOX, A	2	2; 9; 23
1134	CHLOROBENZENE (phenyl chloride)	3	F1	III	3+N2+S	C	2	2		30	95	1.11	2	yes	T1 **(12)**	II A **(7)**	yes	PP, EX, A	0	
1135	ETHYLENE CHLOROHYDRIN (2-CHLOROETHANOL)	6.1	TF1	I	6.1+3+N3	C	2	2		30	95	1.21	1	no	T2 **(12)**	II A **(7)**	yes	PP, EP, EX, TOX, A	2	
1143	CROTONALDEHYDE, STABILIZED	6.1	TF1	I	6.1+3+unst.+N1	C	2	2		40	95	0.85	1	no	T3	II B	yes	PP, EP, EX, TOX, A	2	3; 5; 15
1145	CYCLOHEXANE	3	F1	II	3+N1	C	2	2	3	50	95	0.78	2	yes	T3	II A	yes	PP, EX, A	1	6:+11°C; 17
1146	CYCLOPENTANE	3	F1	II	3+N2	N	2	3		10	97	0.75	3	yes	T2 **(12)**	II A	yes	PP, EX, A	1	
1148	DIACETONE ALCOHOL	3	F1	III	3	N	3	2			97	0.93	3	yes	T1 **(12)**	II A	yes	PP, EX, A	0	

UN No. or substance identification No.	Name and description	Class	Classification code	Packing group	Danger labels	Type of tank vessel	Cargo tank design	Cargo tank type	Cargo tank equipment	Opening pressure of the pressure relief valve / high-velocity vent valve in kPa	Maximum degree of filling in %	Relative density at 20°C	Type of sampling device	Pump-room below deck permitted	Temperature class	Explosion group	Anti-explosion protection required	Equipment required	Number of cones/blue lights	Additional requirements / Remarks
(1)	(2)	3(a)	3(b)	(4)	(5)	(6)	(7)	(8)	(9)	(10)	(11)	(12)	(13)	(14)	(15)	(16)	(17)	(18)	(19)	(20)
1150	1,2-DICHLOROETHYLENE (cis-1,2-DICHLOROETHYLENE)	3	F1	II	3+N2	C	2	2	3	50	95	1.28	2	yes	T2 **(1)** **(12)**	II A	yes	PP, EX, A	1	23
1150	1,2-DICHLOROETHYLENE (trans-1,2-DICHLOROETHYLENE)	3	F1	II	3+N2	C	2	2	3	50	95	1.26	2	yes	T2 **(12)**	II A	yes	PP, EX, A	1	23
1153	ETHYLENE GLYCOL DIETHYL ETHER	3	F1	III	3	N	3	2			97	0.84	3	yes	T4	II B	yes	PP, EX, A	0	
1154	DIETHYLAMINE	3	FC	II	3+8+N3	C	2	2	3	50	95	0.7	2	yes	T2 **(12)**	II A	yes	PP, EP, EX, A	1	23
1155	DIETHYL ETHER	3	F1	I	3	C	1	1			95	0.71	1	yes	T4	II B	yes	PP, EX, A	1	
1157	DIISOBUTYL KETONE	3	F1	III	3+N3+F	N	3	3			97	0.81	3	yes	T2 **(12)**	II B **(4)**	yes	PP, EX, A	0	
1159	DIISOPROPYL ETHER	3	F1	II	3+N2	C	2	2	3	50	95	0.72	2	yes	T2 **(12)**	II A	yes	PP, EX, A	1	
1160	DIMETHYLAMINE AQUEOUS SOLUTION	3	FC	II	3+8+N3	C	2	2	3	50	95	0.82	2	yes	T2 **(12)**	II A	yes	PP, EP, EX, A	1	23
1163	DIMETHYLHYDRAZINE, UNSYMMETRICAL	6.1	TFC	I	6.1+3+8+N2+CMR	C	2	2	3	50	95	0.78	1	no	T3	II B (II B1)	yes	PP, EP, EX, TOX, A	2	23
1165	DIOXANE	3	F1	II	3	N	2	2		10	97	1.03	3	yes	T2 **(12)**	II B	yes	PP, EX, A	1	6:+14°C; 17
1167	DIVINYL ETHER, STABILIZED	3	F1	I	3+unst.	C	1	1			95	0.77	1	yes	T2 **(12)**	II B	yes	PP, EX, A	1	2; 3
1170	ETHANOL (ETHYL ALCOHOL) or ETHANOL SOLUTION (ETHYL ALCOHOL SOLUTION), aqueous solution with more than 70% alcohol by volume	3	F1	II	3	N	2	2		10	97	0.79 - 0.87	3	yes	T2 **(12)**	II B	yes	PP, EX, A	1	

UN No. or substance identification No.	Name and description	Class	Classification code	Packing group	Danger labels	Type of tank vessel	Cargo tank design	Cargo tank type	Cargo tank equipment	Opening pressure of the pressure relief valve / high-velocity vent valve in kPa	Maximum degree of filling in %	Relative density at 20°C	Type of sampling device	Pump-room below deck permitted	Temperature class	Explosion group	Anti-explosion protection required	Equipment required	Number of cones/blue lights	Additional requirements / Remarks
(1)	(2)	3(a)	3(b)	(4)	(5)	(6)	(7)	(8)	(9)	(10)	(11)	(12)	(13)	(14)	(15)	(16)	(17)	(18)	(19)	(20)
1170	ETHANOL SOLUTION (ETHYL ALCOHOL SOLUTION), aqueous solution with more than 24% and not more than 70% alcohol by volume	3	F1	III	3	N	3	2			97	0.87 - 0.96	3	yes	T2 **(12)**	II B	yes	PP, EX, A	0	
1171	ETHYLENE GLYCOL MONOETHYL ETHER	3	F1	III	3+CMR	N	2	3	3	10	97	0.93	3	yes	T3	II B	yes	PP, EP, EX, TOX, A	0	
1172	ETHYLENE GLYCOL MONOETHYL ETHER ACETATE	3	F1	III	3+N3+CMR	N	2	3	3	10	97	0.98	3	yes	T2 **(12)**	II A	yes	PP, EP, EX, TOX, A	0	
1173	ETHYL ACETATE	3	F1	II	3	N	2	2		10	97	0.9	3	yes	T1	II A	yes	PP, EX, A	1	
1175	ETHYLBENZENE	3	F1	II	3+N3	N	2	2		10	97	0.87	3	yes	T2 **(12)**	II A	yes	PP, EX, A	1	
1177	2-ETHYLBUTYL ACETATE	3	F1	III	3	N	3	2			97	0.88	3	yes	T3	II A **(6)**	yes	PP, EX, A	0	
1179	ETHYL BUTYL ETHER (ETHYL tert-BUTYL ETHER)	3	F1	II	3+N3	N	2	2		10	97	0.74	3	yes	T2 **(12)**	II A	yes	PP, EX, A	1	
1184	ETHYLENE DICHLORIDE (1,2-dichloroethane)	3	FT1	II	3+6.1+CMR	C	2	2		50	95	1.25	2	no	T2 **(12)**	II A	yes	PP, EP, EX, TOX, A	2	
1188	ETHYLENE GLYCOL MONOMETHYL ETHER	3	F1	III	3+CMR	N	2	3	3	10	97	0.97	3	yes	T3	II B (II B2)	yes	PP, EP, EX, TOX, A	0	
1191	OCTYL ALDEHYDES (2-ETHYLCAPRONALDEHYDE)	3	F1	III	3+N3+F	C	2	2		30	95	0.82	2	yes	T4	II A **(6)**	yes	PP, EX, A	0	
1191	OCTYL ALDEHYDES (n-OCTALDEHYDE)	3	F1	III	3+N3+F	N	3	3			97	0.82	3	yes	T3	II A	yes	PP, EX, A	0	
1193	ETHYL METHYL KETONE (methyl ethyl ketone)	3	F1	II	3	N	2	2		10	97	0.8	3	yes	T1 **(12)**	II A	yes	PP, EX, A	1	
1198	FORMALDEHYDE SOLUTION, FLAMMABLE	3	FC	III	3+8+N3	N	3	2			97	1.09	3	yes	T2 **(12)**	II B	yes	PP, EP, EX, A	0	34

UN No. or substance identification No.	Name and description	Class	Classification code	Packing group	Danger labels	Type of tank vessel	Cargo tank design	Cargo tank type	Cargo tank equipment	Opening pressure of the pressure relief valve / high-velocity vent valve in kPa	Maximum degree of filling in %	Relative density at 20°C	Type of sampling device	Pump-room below deck permitted	Temperature class	Explosion group	Anti-explosion protection required	Equipment required	Number of cones/blue lights	Additional requirements / Remarks
(1)	(2)	3(a)	3(b)	(4)	(5)	(6)	(7)	(8)	(9)	(10)	(11)	(12)	(13)	(14)	(15)	(16)	(17)	(18)	(19)	(20)
1199	FURALDEHYDES (a-FURALDEHYDE) or FURFURALDEHYDES (a-FURFURYL-ALDEHYDE)	6.1	TF1	II	6.1+3	C	2	2		25	95	1.16	2	no	T3 **(2)**	II B	yes	PP, EP, EX, TOX, A	2	15
1202	GAS OIL complying with standard EN 590:2009 + A1:2010 or DIESEL FUEL or HEATING OIL (LIGHT) with flash- point as specified in EN 590:2009 + A1:2010	3	F1	III	3+N2+F	N	4	3			97	0.82 - 0.85	3	yes			no	PP	0	
1202	GAS OIL or DIESEL FUEL or HEATING OIL (LIGHT) (flash-point not more than 60°C)	3	F1	III	3+(N1, N2, N3, CMR, F or S)	N	3	2			97	< 0,85	3	yes			no	PP	0	22
1202	GAS OIL or DIESEL FUEL or HEATING OIL (LIGHT) (flash-point more than 60°C but not more than 100°C)	3	F1	III	3+(N1, N2, N3, CMR, F or S)	N	4	2			97	< 1,1	3	yes			no	PP	0	22
1203	MOTOR SPIRIT or GASOLINE or PETROL	3	F1	II	3+N2+CMR+F	N	2	3	3	10	97	0.68 - 0.72 **(9)**	3	yes	T3	II A	yes	PP, EP, EX, TOX, A	1	
1203	MOTOR SPIRIT or GASOLINE or PET-ROL, WITH MORE THAN 10% BEN-ZENE INITIAL BOILING POINT ≤ 60°C	3	F1	II	3+N2+CMR+F	C	1	1			95		1	yes	T3	II A	yes	PP, EP, EX, TOX, A	1	
1203	MOTOR SPIRIT or GASOLINE or PETROL WITH MORE THAN 10% BENZENE 60°C < INITIAL BOILING POINT ≤ 85°C	3	F1	II	3+N2+CMR+F	C	2	2	3	50	95		2	yes	T3	II A	yes	PP, EP, EX, TOX, A	1	23
1203	MOTOR SPIRIT or GASOLINE or PETROL WITH MORE THAN 10% BENZENE 85°C < INITIAL BOILING POINT ≤ 115°C	3	F1	II	3+N2+CMR+F	C	2	2		50	95		2	yes	T3	II A	yes	PP, EP, EX, TOX, A	1	

UN No. or substance identification No.	Name and description	Class	Classification code	Packing group	Danger labels	Type of tank vessel	Cargo tank design	Cargo tank type	Cargo tank equipment	Opening pressure of the pressure relief valve / high-velocity vent valve in kPa	Maximum degree of filling in %	Relative density at 20°C	Type of sampling device	Pump-room below deck permitted	Temperature class	Explosion group	Anti-explosion protection required	Equipment required	Number of cones/blue lights	Additional requirements / Remarks
(1)	(2)	3(a)	3(b)	(4)	(5)	(6)	(7)	(8)	(9)	(10)	(11)	(12)	(13)	(14)	(15)	(16)	(17)	(18)	(19)	(20)
1203	MOTOR SPIRIT or GASOLINE or PETROL WITH MORE THAN 10% BENZENE INITIAL BOILING POINT > 115°C	3	F1	II	3+N2+CMR+F	C	2	2		35	95		2	yes	T3	II A	yes	PP, EP, EX, TOX, A	1	
1206	HEPTANES	3	F1	II	3+N1	C	2	2	3	50	95	0.67 - 0,70	2	yes	T3	II A	yes	PP, EX, A	1	
1208	HEXANES	3	F1	II	3+N2	N	2	3		50	97	0.65 - 0.70	2	yes	T3	II A	yes	PP, EX, A	1	
1208	HEXANES	3	F1	II	3+N2	N	2	3	3	10	97	0.65 - 0.70	3	yes	T3	II A	yes	PP, EX, A	1	
1212	ISOBUTANOL (isobutyl alcohol)	3	F1	III	3	N	3	2			97	0.8	3	yes	T2 **(12)**	II A	yes	PP, EX, A	0	
1213	ISOBUTYLACETATE	3	F1	II	3+N3	N	2	2		10	97	0.87	3	yes	T2 **(12)**	II A **(6)**	yes	PP, EX, A	1	
1214	ISOBUTYLAMINE	3	FC	II	3+8+N3	C	2	2	3	50	95	0.73	2	yes	T2 **(12)**	II A **(6)**	yes	PP, EP, EX, A	1	23
1216	ISOOCTENES	3	F1	II	3+N2	N	2	3		10	97	0.73	3	yes	T3	II B1	yes	PP, EX, A	1	
1218	ISOPRENE, STABILIZED	3	F1	I	3+unst.+N2+ CMR	N	1	1			95	0.68	1	yes	T3	II B	yes	PP, EP, EX, TOX, A	1	2; 3; 5; 16
1219	ISOPROPANOL (isopropyl alcohol)	3	F1	II	3	N	2	2		10	97	0.78	3	yes	T2 **(12)**	II A	yes	PP, EX, A	1	
1220	ISOPROPYLE ACETATE	3	F1	II	3	N	2	2		10	97	0.88	3	yes	T2 **(12)**	II A **(6)**	yes	PP, EX, A	1	
1221	ISOPROPYLAMINE	3	FC	I	3+8+N3	C	1	1			95	0.69	1	yes	T2 **(12)**	II A **(6)**	yes	PP, EP, EX, A	1	

UN No. or substance identification No.	Name and description	Class	Classification code	Packing group	Danger labels	Type of tank vessel	Cargo tank design	Cargo tank type	Cargo tank equipment	Opening pressure of the pressure relief valve / high-velocity vent valve in kPa	Maximum degree of filling in %	Relative density at 20°C	Type of sampling device	Pump-room below deck permitted	Temperature class	Explosion group	Anti-explosion protection required	Equipment required	Number of cones/blue lights	Additional requirements / Remarks
(1)	(2)	3(a)	3(b)	(4)	(5)	(6)	(7)	(8)	(9)	(10)	(11)	(12)	(13)	(14)	(15)	(16)	(17)	(18)	(19)	(20)
1223	KEROSENE	3	F1	III	3+N2+F	N	3	3			97	≤ 0.83	3	yes	T3	II A **(6)**	yes	PP, EX, A	0	14
1224	KETONES, LIQUID, N.O.S. Flash point < 23°C with 175 kPa ≤ vp50 < 300 kPa	3	F1	II	3+(N1, N2, N3, CMR, F or S)	N	1	1			95		1	yes	T4 **(3)**	II B **(4)**	yes	PP, EX, A	1	14; 22; 27
1224	KETONES, LIQUID, N.O.S. Flash point < 23°C with 175 kPa ≤ vp50 < 300 kPa	3	F1	II	3+(N1, N2, N3, CMR, F or S)	N	2	2	1	50	95		3	yes	T4 **(3)**	II B **(4)**	yes	PP, EX, A	1	14; 22; 27
1224	KETONES, LIQUID, N.O.S. Flash point < 23°C with 110 kPa ≤ vp50 < 175 kPa	3	F1	II	3+(N1, N2, N3, CMR, F or S)	N	2	2		50	97		3	yes	T4 **(3)**	II B **(4)**	yes	PP, EX, A	1	14; 22; 27
1224	KETONES, LIQUID, N.O.S. Flash point < 23°C with 110 kPa ≤ vp50 < 150 kPa	3	F1	II	3+(N1, N2, N3, CMR, F or S)	N	2	2	3	10	97		3	yes	T4 **(3)**	II B **(4)**	yes	PP, EX, A	1	14; 22; 27
1224	KETONES, LIQUID, N.O.S. Flash point < 23°C with vp50 < 110 kPa	3	F1	II	3+(N1, N2, N3, CMR, F or S)	N	2	2		10	97		3	yes	T4 **(3)**	II B **(4)**	yes	PP, EX, A	1	14; 22; 27
1224	KETONES, LIQUID, N.O.S. Flash point ≥ 23°C but ≤ 60°C	3	F1	III	3+(N1, N2, N3, CMR, F or S)	N	3	2			97		3	yes	T4 **(3)**	II B **(4)**	yes	PP, EX, A	1	14; 22; 27
1224	KETONES, LIQUID, N.O.S. Flash point < 23°C with 175 kPa ≤ vp50 < 300 kPa	3	F1	II	3+(N1, N2, N3, CMR, F or S)	N	1	1			95		1	yes	T4 **(3)**	II B **(4)** (II B3)	yes	PP, EX, A	1	14; 22; 27; 29; 44
1224	KETONES, LIQUID, N.O.S. Flash point < 23°C with 175 kPa ≤ vp50 < 300 kPa	3	F1	II	3+(N1, N2, N3, CMR, F or S)	N	2	2	1	50	95		3	yes	T4 **(3)**	II B **(4)** (II B3)	yes	PP, EX, A	1	14; 22; 27; 44
1224	KETONES, LIQUID, N.O.S. Flash point < 23°C with 110 kPa ≤ vp50 < 175 kPa	3	F1	II	3+(N1, N2, N3, CMR, F or S)	N	2	2		50	97		3	yes	T4 **(3)**	II B **(4)** (II B3)	yes	PP, EX, A	1	14; 22; 27; 44
1224	KETONES, LIQUID, N.O.S. Flash point < 23°C with 110 kPa ≤ vp50 < 150 kPa	3	F1	II	3+(N1, N2, N3, CMR, F or S)	N	2	2	3	10	97		3	yes	T4 **(3)**	II B **(4)** (II B3)	yes	PP, EX, A	1	14; 22; 27; 44

UN No. or substance identification No.	Name and description	Class	Classification code	Packing group	Danger labels	Type of tank vessel	Cargo tank design	Cargo tank type	Cargo tank equipment	Opening pressure of the pressure relief valve / high-velocity vent valve in kPa	Maximum degree of filling in %	Relative density at 20°C	Type of sampling device	Pump-room below deck permitted	Temperature class	Explosion group	Anti-explosion protection required	Equipment required	Number of cones/blue lights	Additional requirements / Remarks
(1)	(2)	3(a)	3(b)	(4)	(5)	(6)	(7)	(8)	(9)	(10)	(11)	(12)	(13)	(14)	(15)	(16)	(17)	(18)	(19)	(20)
1224	KETONES, LIQUID, N.O.S. Flash point < 23°C with vp50 < 110 kPa	3	F1	II	3+(N1, N2, N3, CMR, F or S)	N	2	2		10	97		3	yes	T4 **(3)**	II B **(4)** (II B3)	yes	PP, EX, A	1	14; 22; 27; 44
1224	KETONES, LIQUID, N.O.S. Flash point ≥ 23°C but ≤ 60°C	3	F1	III	3+(N1, N2, N3, CMR, F or S)	N	3	2			97		3	yes	T4 **(3)**	II B **(4)** (II B3)	yes	PP, EX, A	1	14; 22; 27; 44
1229	MESITYL OXYDE	3	F1	III	3	N	3	2			97	0.85	3	yes	T2 **(12)**	II A	yes	PP, EX, A	0	
1230	METHANOL	3	FT1	II	3+6.1	N	2	2	3	50	95	0.79	2	yes	T2 **(12)**	II A	yes	PP, EP, EX, TOX, A	1	23
1231	METHYL ACETATE	3	F1	II	3	N	2	2		10	97	0.93	3	yes	T1 **(12)**	II A	yes	PP, EX, A	1	
1235	METHYLAMINE, AQUEOUS SOLUTION	3	FC	II	3+8+N3	C	2	2		50	95		2	yes	T2 **(12)**	II A	yes	PP, EP, EX, A	1	
1243	METHYL FORMATE	3	F1	I	3	C	1	1			95	0.97	1	yes	T2 **(12)**	II A	yes	PP, EX, A	1	
1244	METHYLHYDRAZINE	6.1	TFC	I	6.1+3+8	C	2	2		45	95	0.88	1	no	T4	II C **(5)**	yes	PP, EP, EX, TOX, A	2	
1245	METHYL ISOBUTYL KETONE	3	F1	II	3	N	2	2		10	97	0.8	3	yes	T1 **(12)**	II A	yes	PP, EX, A	1	
1247	METHYL METHACRYLATE MONOMER, STABILIZED	3	F1	II	3+unst.+N3	C	2	2		40	95	0.94	1	yes	T2 **(12)**	II A	yes	PP, EX, A	1	3; 5; 16
1262	OCTANES	3	F1	II	3+N1	C	2	2		45	95	0.69 - 0.71	2	yes	T3	II A	yes	PP, EX, A	1	
1264	PARALDEHYDE	3	F1	III	3	N	3	2			97	0.99	3	yes	T3	II A **(6)**	yes	PP, EX, A	0	6:+16°C; 17

UN No. or substance identification No.	Name and description	Class	Classification code	Packing group	Danger labels	Type of tank vessel	Cargo tank design	Cargo tank type	Cargo tank equipment	Opening pressure of the pressure relief valve / high-velocity vent valve in kPa	Maximum degree of filling in %	Relative density at 20°C	Type of sampling device	Pump-room below deck permitted	Temperature class	Explosion group	Anti-explosion protection required	Equipment required	Number of cones/blue lights	Additional requirements / Remarks
(1)	(2)	3(a)	3(b)	(4)	(5)	(6)	(7)	(8)	(9)	(10)	(11)	(12)	(13)	(14)	(15)	(16)	(17)	(18)	(19)	(20)
1265	PENTANES, liquid (2- METHYLBUTANE)	3	F1	I	3+N2	N	1	1			97	0.62	1	yes	T2 **(12)**	II A	yes	PP, EX, A	1	
1265	PENTANES, liquid (n-PENTANE)	3	F1	II	3+N2	N	2	3		50	97	0.63	3	yes	T3	II A	yes	PP, EX, A	1	
1265	PENTANES, liquid (n-PENTANE)	3	F1	II	3+N2	N	2	3	3	10	97	0.63	3	yes	T3	II A	yes	PP, EX, A	1	
1265	PENTANES, liquid Flash point < 23°C with 175 kPa ≤ vp50 < 300 kPa	3	F1	I	3 + N2	N	1	1			95		1	yes	T4	II A	yes	PP, EX, A	1	14; 22
1265	PENTANES, liquid Flash point < 23°C with 175 kPa ≤ vp50 < 300 kPa	3	F1	I	3 + N2	N	2	3	1	50	95		3	yes	T4	II A	yes	PP, EX, A	1	14; 22
1265	PENTANES, liquid Flash point < 23°C with 110 kPa ≤ vp50 < 175 kPa	3	F1	I	3 + N2	N	2	3		50	97		3	yes	T4	II A	yes	PP, EX, A	1	14; 22
1265	PENTANES, liquid Flash point < 23°C with 110 kPa ≤ vp50 < 150 kPa	3	F1	I	3 + N2	N	2	3	3	10	97		3	yes	T4	II A	yes	PP, EX, A	1	14; 22
1265	PENTANES, liquid Flash point < 23°C with vp50 < 110 kPa	3	F1	I	3 + N2	N	2	3		10	97		3	yes	T4	II A	yes	PP, EX, A	1	14; 22
1265	PENTANES, liquid Flash point < 23°C with 175 kPa ≤ vp50 < 300 kPa	3	F1	II	3 + N2	N	1	1			95		1	yes	T4	II A	yes	PP, EX, A	1	14; 22
1265	PENTANES, liquid Flash point < 23°C with 175 kPa ≤ vp50 < 300 kPa	3	F1	II	3 + N2	N	2	3	1	50	95		3	yes	T4	II A	yes	PP, EX, A	1	14; 22
1265	PENTANES, liquid Flash point < 23°C with 110 kPa ≤ vp50 < 175 kPa	3	F1	II	3 + N2	N	2	3		50	97		3	yes	T4	II A	yes	PP, EX, A	1	14; 22
1265	PENTANES, liquid Flash point < 23°C with 110 kPa ≤ vp50 < 150 kPa	3	F1	II	3 + N2	N	2	3	3	10	97		3	yes	T4	II A	yes	PP, EX, A	1	14; 22
1265	PENTANES, liquid Flash point < 23°C with vp50 < 110 kPa	3	F1	II	3 + N2	N	2	3		10	97		3	yes	T4	II A	yes	PP, EX, A	1	14; 22
1267	PETROLEUM CRUDE OIL WITH MORE THAN 10% BENZENE INITIAL BOILING POINT ≤ 60°C	3	F1	I	3+CMR+F+ (N1, N2, N3)	C	1	1			95		1	yes	T4 **(3)**	II B **(4)**	yes	PP, EP, EX, TOX, A	1	43

UN No. or substance identification No.	Name and description	Class	Classification code	Packing group	Danger labels	Type of tank vessel	Cargo tank design	Cargo tank type	Cargo tank equipment	Opening pressure of the pressure relief valve / high-velocity vent valve in kPa	Maximum degree of filling in %	Relative density at 20°C	Type of sampling device	Pump-room below deck permitted	Temperature class	Explosion group	Anti-explosion protection required	Equipment required	Number of cones/blue lights	Additional requirements / Remarks
(1)	(2)	3(a)	3(b)	(4)	(5)	(6)	(7)	(8)	(9)	(10)	(11)	(12)	(13)	(14)	(15)	(16)	(17)	(18)	(19)	(20)
1267	PETROLEUM CRUDE OIL WITH MORE THAN 10% BENZENE INITIAL BOILING POINT ≤ 60°C	3	F1	II	3+CMR+F+ (N1, N2, N3)	C	1	1			95		1	yes	T4 **(3)**	II B **(4)**	yes	PP, EP, EX, TOX, A	1	
1267	PETROLEUM CRUDE OIL WITH MORE THAN 10% BENZENE 60°C < INITIAL BOILING ≤ 85°C	3	F1	II	3+CMR+F+ (N1, N2, N3)	C	2	2	3	50	95		2	yes	T4 **(3)**	II B **(4)**	yes	PP, EP, EX, TOX, A	1	23; 38
1267	PETROLEUM CRUDE OIL WITH MORE THAN 10% BENZENE 85°C < INITIAL BOILING POINT ≤ 115°C	3	F1	II	3+CMR+F+ (N1, N2, N3)	C	2	2		50	95		2	yes	T4 **(3)**	II B **(4)**	yes	PP, EP, EX, TOX, A	1	
1267	PETROLEUM CRUDE OIL WITH MORE THAN 10% BENZENE INITIAL BOILING POINT > 115°C	3	F1	II	3+CMR+F+ (N1, N2, N3)	C	2	2		35	95		2	yes	T4 **(3)**	II B **(4)**	yes	PP, EP, EX, TOX, A	1	
1267	PETROLEUM CRUDE OIL WITH MORE THAN 10% BENZENE INITIAL BOILING POINT ≤ 60°C	3	F1	I	3+CMR+F+ (N1, N2, N3)	C	1	1			95		1	yes	T4 **(3)**	II B **(4)** (II B3)	yes	PP, EP, EX, TOX, A	1	44
1267	PETROLEUM CRUDE OIL WITH MORE THAN 10% BENZENE INITIAL BOILING POINT ≤ 60°C	3	F1	II	3+CMR+F+ (N1, N2, N3)	C	1	1			95		1	yes	T4 **(3)**	II B **(4)** (II B3)	yes	PP, EP, EX, TOX, A	1	44
1267	PETROLEUM CRUDE OIL WITH MORE THAN 10% BENZENE INITIAL BOILING POINT ≤ 60°C	3	F1	III	3+CMR+F+ (N1, N2, N3)	C	1	1			95		1	yes	T4 **(3)**	II B **(4)** (II B3)	yes	PP, EP, EX, TOX, A	1	44
1267	PETROLEUM CRUDE OIL WITH MORE THAN 10% BENZENE 60°C < INITIAL BOILING ≤ 85°C	3	F1	II	3+CMR+F+ (N1, N2, N3)	C	2	2	3	50	95		2	yes	T4 **(3)**	II B **(4)** (II B3)	yes	PP, EP, EX, TOX, A	1	23; 38; 44

UN No. or substance identification No.	Name and description	Class	Classification code	Packing group	Danger labels	Type of tank vessel	Cargo tank design	Cargo tank type	Cargo tank equipment	Opening pressure of the pressure relief valve / high-velocity vent valve in kPa	Maximum degree of filling in %	Relative density at 20°C	Type of sampling device	Pump-room below deck permitted	Temperature class	Explosion group	Anti-explosion protection required	Equipment required	Number of cones/blue lights	Additional requirements / Remarks
(1)	(2)	3(a)	3(b)	(4)	(5)	(6)	(7)	(8)	(9)	(10)	(11)	(12)	(13)	(14)	(15)	(16)	(17)	(18)	(19)	(20)
1267	PETROLEUM CRUDE OIL WITH MORE THAN 10% BENZENE 85°C < INITIAL BOILING POINT ≤ 115°C	3	F1	II	3+CMR+F+ (N1, N2, N3)	C	2	2		50	95		2	yes	T4 **(3)**	II B **(4)** (II B3)	yes	PP, EP, EX, TOX, A	1	44
1267	PETROLEUM CRUDE OIL WITH MORE THAN 10% BENZENE INITIAL BOILING POINT > 115°C	3	F1	II	3+CMR+F+ (N1, N2, N3)	C	2	2		35	95		2	yes	T4 **(3)**	II B **(4)** (II B3)	yes	PP, EP, EX, TOX, A	1	44
1267	PETROLEUM CRUDE OIL WITH MORE THAN 10% BENZENE 60°C < INITIAL BOILING ≤ 85°C	3	F1	III	3+CMR+F+ (N1, N2, N3)	C	2	2	3	50	95		2	yes	T4 **(3)**	II B **(4)** (II B3)	yes	PP, EP, EX, TOX, A	1	23; 38; 44
1267	PETROLEUM CRUDE OIL WITH MORE THAN 10% BENZENE 85°C < INITIAL BOILING POINT ≤ 115°C	3	F1	III	3+CMR+F+ (N1, N2, N3)	C	2	2		50	95		2	yes	T4 **(3)**	II B **(4)** (II B3)	yes	PP, EP, EX, TOX, A	1	44
1267	PETROLEUM CRUDE OIL WITH MORE THAN 10% BENZENE INITIAL BOILING POINT > 115°C	3	F1	III	3+CMR+F+ (N1, N2, N3)	C	2	2		35	95		2	yes	T4 **(3)**	II B **(4)** (II B3)	yes	PP, EP, EX, TOX, A	1	44
1267	PETROLEUM CRUDE OIL Flash point < 23°C with 175 kPa≤ vp50 < 300 kPa	3	F1	I	3+(N1, N2, N3, CMR, F)	N	1	1			95		1	yes	T4 **(3)**	II B **(4)**	yes	PP, EX, A	1	14; 22
1267	PETROLEUM CRUDE OIL Flash point < 23°C with 175 kPa ≤ vp50 < 300 kPa	3	F1	I	3+(N1, N2, N3, CMR, F)	N	2	2	1	50	95		3	yes	T4 **(3)**	II B **(4)**	yes	PP, EX, A	1	14; 22
1267	PETROLEUM CRUDE OIL Flash point < 23°C with 110 kPa ≤ vp50 < 175 kPa	3	F1	I	3+(N1, N2, N3, CMR, F)	N	2	2		50	97		3	yes	T4 **(3)**	II B **(4)**	yes	PP, EX, A	1	14; 22
1267	PETROLEUM CRUDE OIL Flash point < 23°C with 110 kPa ≤ vp50 < 150 kPa	3	F1	I	3+(N1, N2, N3, CMR, F)	N	2	2	3	10	97		3	yes	T4 **(3)**	II B **(4)**	yes	PP, EX, A	1	14; 22
1267	PETROLEUM CRUDE OIL Flash point < 23°C with vp50<110kPa	3	F1	I	3+(N1, N2, N3, CMR, F)	N	2	2		10	97		3	yes	T4 **(3)**	II B **(4)**	yes	PP, EX, A	1	14; 22

UN No. or substance identification No.	Name and description	Class	Classification code	Packing group	Danger labels	Type of tank vessel	Cargo tank design	Cargo tank type	Cargo tank equipment	Opening pressure of the pressure relief valve / high-velocity vent valve in kPa	Maximum degree of filling in %	Relative density at 20°C	Type of sampling device	Pump-room below deck permitted	Temperature class	Explosion group	Anti-explosion protection required	Equipment required	Number of cones/blue lights	Additional requirements / Remarks
(1)	(2)	3(a)	3(b)	(4)	(5)	(6)	(7)	(8)	(9)	(10)	(11)	(12)	(13)	(14)	(15)	(16)	(17)	(18)	(19)	(20)
1267	PETROLEUM CRUDE OIL Flash point < 23°C with 175 kPa ≤ vp50 < 300 kPa	3	F1	II	3+(N1, N2, N3, CMR, F)	N	1	1			95		1	yes	T4 **(3)**	II B **(4)**	yes	PP, EX, A	1	14; 22
1267	PETROLEUM CRUDE OIL Flash point < 23°C with 175 kPa ≤ vp50 < 300 kPa	3	F1	II	3+(N1, N2, N3, CMR, F)	N	2	2	1	50	95		3	yes	T4 **(3)**	II B **(4)**	yes	PP, EX, A	1	14; 22
1267	PETROLEUM CRUDE OIL Flash point < 23°C with 110 kPa ≤ vp50 < 175 kPa	3	F1	II	3+(N1, N2, N3, CMR, F)	N	2	2		50	97		3	yes	T4 **(3)**	II B **(4)**	yes	PP, EX, A	1	14; 22
1267	PETROLEUM CRUDE OIL Flash point < 23°C with 110 kPa ≤ vp50 < 150 kPa	3	F1	II	3+(N1, N2, N3, CMR, F)	N	2	2	3	10	97		3	yes	T4 **(3)**	II B **(4)**	yes	PP, EX, A	1	14; 22
1267	PETROLEUM CRUDE OIL Flash point < 23°C with vp50 < 110 kPa	3	F1	II	3+(N1, N2, N3, CMR, F)	N	2	2		10	97		3	yes	T4 **(3)**	II B **(4)**	yes	PP, EX, A	1	14; 22
1267	PETROLEUM CRUDE OIL Flash point ≥ 23°C but ≤60°C	3	F1	III	3+(N1, N2, N3, CMR, F)	N	3	2			97		3	yes	T4 **(3)**	II B **(4)**	yes	PP, EX, A	1	14; 22
1267	PETROLEUM CRUDE OIL Flash point < 23°C with 175 kP a≤ vp50 < 300 kPa	3	F1	I	3+(N1, N2, N3, CMR, F)	N	1	1			95		1	yes	T4 **(3)**	II B **(4)** (II B3)	yes	PP, EX, A	1	14; 22; 44
1267	PETROLEUM CRUDE OIL Flash point < 23°C with 175 kPa ≤ vp50 < 300 kPa	3	F1	I	3+(N1, N2, N3, CMR, F)	N	2	2	1	50	95		3	yes	T4 **(3)**	II B **(4)** (II B3)	yes	PP, EX, A	1	14; 22; 44
1267	PETROLEUM CRUDE OIL Flash point < 23°C with 110 kPa ≤ vp50 < 175 kPa	3	F1	I	3+(N1, N2, N3, CMR, F)	N	2	2		50	97		3	yes	T4 **(3)**	II B **(4)** (II B3)	yes	PP, EX, A	1	14; 22; 44
1267	PETROLEUM CRUDE OIL Flash point < 23°C with 110 kPa ≤ vp50 < 150 kPa	3	F1	I	3+(N1, N2, N3, CMR, F)	N	2	2	3	10	97		3	yes	T4 **(3)**	II B **(4)** (II B3)	yes	PP, EX, A	1	14; 22; 44

UN No. or substance identification No.	Name and description	Class	Classification code	Packing group	Danger labels	Type of tank vessel	Cargo tank design	Cargo tank type	Cargo tank equipment	Opening pressure of the pressure relief valve / high-velocity vent valve in kPa	Maximum degree of filling in %	Relative density at 20°C	Type of sampling device	Pump-room below deck permitted	Temperature class	Explosion group	Anti-explosion protection required	Equipment required	Number of cones/blue lights	Additional requirements / Remarks
(1)	(2)	3(a)	3(b)	(4)	(5)	(6)	(7)	(8)	(9)	(10)	(11)	(12)	(13)	(14)	(15)	(16)	(17)	(18)	(19)	(20)
1267	PETROLEUM CRUDE OIL Flash point < 23°C with vp50<110kPa	3	F1	I	3+(N1, N2, N3, CMR, F)	N	2	2		10	97		3	yes	T4 **(3)**	II B **(4)** (II B3)	yes	PP, EX, A	1	14; 22; 44
1267	PETROLEUM CRUDE OIL Flash point < 23°C with 175 kPa ≤ vp50 < 300 kPa	3	F1	II	3+(N1, N2, N3, CMR, F)	N	1	1			95		1	yes	T4 **(3)**	II B **(4)** (II B3)	yes	PP, EX, A	1	14; 22; 44
1267	PETROLEUM CRUDE OIL Flash point < 23°C with 175 kPa ≤ vp50 < 300 kPa	3	F1	II	3+(N1, N2, N3, CMR, F)	N	2	2	1	50	95		3	yes	T4 **(3)**	II B **(4)** (II B3)	yes	PP, EX, A	1	14; 22; 44
1267	PETROLEUM CRUDE OIL Flash point < 23°C with 110 kPa ≤ vp50 < 175 kPa	3	F1	II	3+(N1, N2, N3, CMR, F)	N	2	2		50	97		3	yes	T4 **(3)**	II B **(4)** (II B3)	yes	PP, EX, A	1	14; 22; 44
1267	PETROLEUM CRUDE OIL Flash point < 23°C with 110 kPa ≤ vp50 < 150 kPa	3	F1	II	3+(N1, N2, N3, CMR, F)	N	2	2	3	10	97		3	yes	T4 **(3)**	II B **(4)** (II B3)	yes	PP, EX, A	1	14; 22; 44
1267	PETROLEUM CRUDE OIL Flash point < 23°C with vp50 < 110 kPa	3	F1	II	3+(N1, N2, N3, CMR, F)	N	2	2		10	97		3	yes	T4 **(3)**	II B **(4)** (II B3)	yes	PP, EX, A	1	14; 22; 44
1267	PETROLEUM CRUDE OIL Flash point ≥ 23°C but ≤60°C	3	F1	III	3+(N1, N2, N3, CMR, F)	N	3	2			97		3	yes	T4 **(3)**	II B **(4)** (II B3)	yes	PP, EX, A	1	14; 22; 44
1268	PETROLEUM DISTILLATES, N.O.S. WITH MORE THAN 10% BENZENE or PETROLEUM PRODUCTS, N.O.S. WITH MORE THAN 10% BENZENE INITIAL BOILING POINT ≤ 60°C	3	F1	I	3+CMR+F+ (N1, N2, N3)	C	1	1			95		1	yes	T4 **(3)**	II B **(4)**	yes	PP, EP, EX, TOX, A	1	43; 44

UN No. or substance identification No.	Name and description	Class	Classification code	Packing group	Danger labels	Type of tank vessel	Cargo tank design	Cargo tank type	Cargo tank equipment	Opening pressure of the pressure relief valve / high-velocity vent valve in kPa	Maximum degree of filling in %	Relative density at 20°C	Type of sampling device	Pump-room below deck permitted	Temperature class	Explosion group	Anti-explosion protection required	Equipment required	Number of cones/blue lights	Additional requirements / Remarks
(1)	(2)	3(a)	3(b)	(4)	(5)	(6)	(7)	(8)	(9)	(10)	(11)	(12)	(13)	(14)	(15)	(16)	(17)	(18)	(19)	(20)
1268	PETROLEUM DISTILLATES, N.O.S. WITH MORE THAN 10% BENZENE or PETROLEUM PRODUCTS, N.O.S. WITH MORE THAN 10% BENZENE INITIAL BOILING POINT ≤ 60°C	3	F1	II	3+CMR+F+ (N1, N2, N3)	C	1	1			95		1	yes	T4 **(3)**	II B **(4)**	yes	PP, EP, EX, TOX, A	1	
1268	PETROLEUM DISTILLATES, N.O.S. WITH MORE THAN 10% BENZENE or PETROLEUM PRODUCTS, N.O.S. WITH MORE THAN 10% BENZENE 60°C < INITIAL BOILING POINT ≤ 85°C	3	F1	II	3+CMR+F+ (N1, N2, N3)	C	2	2	3	50	95		2	yes	T4 **(3)**	II B **(4)**	yes	PP, EP, EX, TOX, A	1	23; 38; 44
1268	PETROLEUM DISTILLATES, N.O.S. WITH MORE THAN 10% BENZENE or PETROLEUM PRODUCTS, N.O.S, WITH MORE THAN 10% BENZENE, 85°C < INITIAL BOILING POINT ≤ 115°C	3	F1	II	3+CMR+F+ (N1, N2, N3)	C	2	2		50	95		2	yes	T4 **(3)**	II B **(4)**	yes	PP, EP, EX, TOX, A	1	
1268	PETROLEUM DISTILLATES, N.O.S. WITH MORE THAN 10% BENZENE or PETROLEUM PRODUCTS, N.O.S, WITH MORE THAN 10% BENZENE, INITIAL BOILING POINT > 115°C	3	F1	II	3+CMR+F+ (N1, N2, N3)	C	2	2		35	95		2	yes	T4 **(3)**	II B **(4)**	yes	PP, EP, EX, TOX, A	1	
1268	PETROLEUM DISTILLATES, N.O.S. WITH MORE THAN 10% BENZENE or PETROLEUM PRODUCTS, N.O.S. WITH MORE THAN 10% BENZENE INITIAL BOILING POINT ≤ 60°C	3	F1	I	3+CMR+F+ (N1, N2, N3)	C	1	1			95		1	yes	T4 **(3)**	II B **(4)** (II B3)	yes	PP, EP, EX, TOX, A	1	27; 43; 44

UN No. or substance identification No.	Name and description	Class	Classification code	Packing group	Danger labels	Type of tank vessel	Cargo tank design	Cargo tank type	Cargo tank equipment	Opening pressure of the pressure relief valve / high-velocity vent valve in kPa	Maximum degree of filling in %	Relative density at 20°C	Type of sampling device	Pump-room below deck permitted	Temperature class	Explosion group	Anti-explosion protection required	Equipment required	Number of cones/blue lights	Additional requirements / Remarks
(1)	(2)	3(a)	3(b)	(4)	(5)	(6)	(7)	(8)	(9)	(10)	(11)	(12)	(13)	(14)	(15)	(16)	(17)	(18)	(19)	(20)
1268	PETROLEUM DISTILLATES, N.O.S. WITH MORE THAN 10% BENZENE or PETROLEUM PRODUCTS, N.O.S. WITH MORE THAN 10% BENZENE INITIAL BOILING POINT ≤ 60°C	3	F1	II	3+CMR+F+ (N1, N2, N3)	C	1	1			95		1	yes	T4 **(3)**	II B **(4)** (II B3)	yes	PP, EP, EX, TOX, A	1	44
1268	PETROLEUM DISTILLATES, N.O.S. WITH MORE THAN 10% BENZENE or PETROLEUM PRODUCTS, N.O.S. WITH MORE THAN 10% BENZENE 60°C < INITIAL BOILING POINT ≤ 85°C	3	F1	II	3+CMR+F+ (N1, N2, N3)	C	2	2	3	50	95		2	yes	T4 **(3)**	II B **(4)** (II B3)	yes	PP, EP, EX, TOX, A	1	23; 27; 44
1268	PETROLEUM DISTILLATES, N.O.S. WITH MORE THAN 10% BENZENE or PETROLEUM PRODUCTS, N.O.S, WITH MORE THAN 10% BENZENE, 85°C < INITIAL BOILING POINT ≤ 115°C	3	F1	II	3+CMR+F+ (N1, N2, N3)	C	2	2		50	95		2	yes	T4 **(3)**	II B **(4)** (II B3)	yes	PP, EP, EX, TOX, A	1	44
1268	PETROLEUM DISTILLATES, N.O.S. WITH MORE THAN 10% BENZENE or PETROLEUM PRODUCTS, N.O.S, WITH MORE THAN 10% BENZENE, INITIAL BOILING POINT > 115°C	3	F1	II	3+CMR+F+ (N1, N2, N3)	C	2	2		35	95		2	yes	T4 **(3)**	II B **(4)** (II B3)	yes	PP, EP, EX, TOX, A	1	44
1268	PETROLEUM DISTILLATES, N.O.S or PETROLEUM PRODUCTS, N.O.S. (NAPHTHA) 110 kPa < vp50 ≤ 175 kPa	3	F1	II	3+N2+CMR+F	N	2	3		50	97	0.735	3	yes	T3	II A	yes	PP, EP, EX, TOX, A	1	14
1268	PETROLEUM DISTILLATES; N.O.S or PETROLEUM PRODUCTS, N.O.S. (NAPHTHA) 110 kPa < vp50 ≤ 150 kPa	3	F1	II	3+N2+CMR+F	N	2	3	3	10	97	0.735	3	yes	T3	II A	yes	PP, EP, EX, TOX, A	1	14
1268	PETROLEUM DISTILLATES, N.O.S or PETROLEUM PRODUCTS, N.O.S. (NAPHTHA) vp50 ≤ 110 kPa	3	F1	II	3+N2+CMR+F	N	2	3		10	97	0.735	3	yes	T3	II A	yes	PP, EP, EX, TOX, A	1	14

UN No. or substance identification No.	Name and description	Class	Classification code	Packing group	Danger labels	Type of tank vessel	Cargo tank design	Cargo tank type	Cargo tank equipment	Opening pressure of the pressure relief valve / high-velocity vent valve in kPa	Maximum degree of filling in %	Relative density at 20°C	Type of sampling device	Pump-room below deck permitted	Temperature class	Explosion group	Anti-explosion protection required	Equipment required	Number of cones/blue lights	Additional requirements / Remarks
(1)	(2)	3(a)	3(b)	(4)	(5)	(6)	(7)	(8)	(9)	(10)	(11)	(12)	(13)	(14)	(15)	(16)	(17)	(18)	(19)	(20)
1268	PETROLEUM DISTILLATES, N.O.S, or PETROLEUM PRODUCTS, N.O.S. (BENZENE HEART CUT) vp50 ≤ 110 kPa	3	F1	II	3+N2+CMR+F	N	2	3		10	97	0.765	3	yes	T3	II A	yes	PP, EP, EX, TOX, A	1	14
1268	PETROLEUM DISTILLATES, N.O.S or PETROLEUM PRODUCTS, N.O.S. Flash point < 23°C with 175kPa ≤ vp50<300kPa	3	F1	I	3+(N1, N2, N3, CMR, F)	N	1	1			95		1	yes	T4 **(3)**	II B **(4)**	yes	PP, EX, A	1	14; 22; 27
1268	PETROLEUM DISTILLATES, N.O.S or PETROLEUM PRODUCTS, N.O.S. Flash point < 23°C with 175kPa≤vp50<300kPa	3	F1	I	3+(N1, N2, N3, CMR, F)	N	2	2	1	50	95		3	yes	T4 **(3)**	II B **(4)**	yes	PP, EX, A	1	14; 22; 27
1268	PETROLEUM DISTILLATES, N.O.S or PETROLEUM PRODUCTS, N.O.S. Flash point < 23°C with 110kPa≤vp50<175kPa	3	F1	I	3+(N1, N2, N3, CMR, F)	N	2	2		50	97		3	yes	T4 **(3)**	II B **(4)**	yes	PP, EX, A	1	14; 22; 27
1268	PETROLEUM DISTILLATES, N.O.S or PETROLEUM PRODUCTS, N.O.S. Flash point < 23°C with 110kPa≤vp50<150kPa	3	F1	I	3+(N1, N2, N3, CMR, F)	N	2	2	3	10	97		3	yes	T4 **(3)**	II B **(4)**	yes	PP, EX, A	1	14; 22; 27
1268	PETROLEUM DISTILLATES, N.O.S or PETROLEUM PRODUCTS, N.O.S. Flash point < 23°C with vp50<110kPa	3	F1	I	3+(N1, N2, N3, CMR, F)	N	2	2		10	97		3	yes	T4 **(3)**	II B **(4)**	yes	PP, EX, A	1	14; 22; 27
1268	PETROLEUM DISTILLATES, N.O.S or PETROLEUM PRODUCTS, N.O.S. Flash point < 23°C with 175kPa≤vp50<300kPa	3	F1	II	3+(N1, N2, N3, CMR, F)	N	1	1			95		1	yes	T4 **(3)**	II B **(4)**	yes	PP, EX, A	1	14; 22; 27
1268	PETROLEUM DISTILLATES, N.O.S or PETROLEUM PRODUCTS, N.O.S. Flash point < 23°C with 175kPa≤vp50<300kPa	3	F1	II	3+(N1, N2, N3, CMR, F)	N	2	2	1	50	95		3	yes	T4 **(3)**	II B **(4)**	yes	PP, EX, A	1	14; 22; 27
1268	PETROLEUM DISTILLATES, N.O.S or PETROLEUM PRODUCTS, N.O.S. Flash point < 23°C with 110kPa≤vp50<175kPa	3	F1	II	3+(N1, N2, N3, CMR, F)	N	2	2		50	97		3	yes	T4 **(3)**	II B **(4)**	yes	PP, EX, A	1	14; 22; 27

UN No. or substance identification No.	Name and description	Class	Classification code	Packing group	Danger labels	Type of tank vessel	Cargo tank design	Cargo tank type	Cargo tank equipment	Opening pressure of the pressure relief valve / high-velocity vent valve in kPa	Maximum degree of filling in %	Relative density at 20°C	Type of sampling device	Pump-room below deck permitted	Temperature class	Explosion group	Anti-explosion protection required	Equipment required	Number of cones/blue lights	Additional requirements / Remarks
(1)	(2)	3(a)	3(b)	(4)	(5)	(6)	(7)	(8)	(9)	(10)	(11)	(12)	(13)	(14)	(15)	(16)	(17)	(18)	(19)	(20)
1268	PETROLEUM DISTILLATES, N.O.S or PETROLEUM PRODUCTS, N.O.S. Flash point < 23°C with 110kPa≤vp50<150kPa	3	F1	II	3+(N1, N2, N3, CMR, F)	N	2	2	3	10	97		3	yes	T4 **(3)**	II B **(4)**	yes	PP, EX, A	1	14; 22; 27
1268	PETROLEUM DISTILLATES, N.O.S or PETROLEUM PRODUCTS, N.O.S. Flash point < 23°C with vp50 < 110 kPa	3	F1	II	3+(N1, N2, N3, CMR, F)	N	2	2		10	97		3	yes	T4 **(3)**	II B **(4)**	yes	PP, EX, A	1	14; 22; 27
1268	PETROLEUM DISTILLATES, N.O.S or PETROLEUM PRODUCTS, N.O.S. Flash point ≥ 23°C but ≤ 60°C	3	F1	III	3+(N1, N2, N3, CMR, F)	N	3	2			97		3	yes	T4 **(3)**	II B **(4)**	yes	PP, EX, A	1	14; 22; 27
1268	PETROLEUM DISTILLATES, N.O.S or PETROLEUM PRODUCTS, N.O.S. Flash point < 23°C with 175kPa ≤ vp50<300kPa	3	F1	I	3+(N1, N2, N3, CMR, F)	N	1	1			95		1	yes	T4 **(3)**	II B **(4)** (II B3)	yes	PP, EX, A	1	14; 22; 27; 44
1268	PETROLEUM DISTILLATES, N.O.S or PETROLEUM PRODUCTS, N.O.S. Flash point < 23°C with 175kPa≤vp50<300kPa	3	F1	I	3+(N1, N2, N3, CMR, F)	N	2	2	1	50	95		3	yes	T4 **(3)**	II B **(4)** (II B3)	yes	PP, EX, A	1	14; 22; 27; 44
1268	PETROLEUM DISTILLATES, N.O.S or PETROLEUM PRODUCTS, N.O.S. Flash point < 23°C with 110kPa≤vp50<175kPa	3	F1	I	3+(N1, N2, N3, CMR, F)	N	2	2		50	97		3	yes	T4 **(3)**	II B **(4)** (II B3)	yes	PP, EX, A	1	14; 22; 27; 44
1268	PETROLEUM DISTILLATES, N.O.S or PETROLEUM PRODUCTS, N.O.S. Flash point < 23°C with 110kPa≤vp50<150kPa	3	F1	I	3+(N1, N2, N3, CMR, F)	N	2	2	3	10	97		3	yes	T4 **(3)**	II B **(4)** (II B3)	yes	PP, EX, A	1	14; 22; 27; 44
1268	PETROLEUM DISTILLATES, N.O.S or PETROLEUM PRODUCTS, N.O.S. Flash point < 23°C with vp50<110kPa	3	F1	I	3+(N1, N2, N3, CMR, F)	N	2	2		10	97		3	yes	T4 **(3)**	II B **(4)** (II B3)	yes	PP, EX, A	1	14; 22; 27; 44
1268	PETROLEUM DISTILLATES, N.O.S or PETROLEUM PRODUCTS, N.O.S. Flash point < 23°C with 175kPa≤vp50<300kPa	3	F1	II	3+(N1, N2, N3, CMR, F)	N	1	1			95		1	yes	T4 **(3)**	II B **(4)** (II B3)	yes	PP, EX, A	1	14; 22; 27; 44

UN No. or substance identification No.	Name and description	Class	Classification code	Packing group	Danger labels	Type of tank vessel	Cargo tank design	Cargo tank type	Cargo tank equipment	Opening pressure of the pressure relief valve / high-velocity vent valve in kPa	Maximum degree of filling in %	Relative density at 20°C	Type of sampling device	Pump-room below deck permitted	Temperature class	Explosion group	Anti-explosion protection required	Equipment required	Number of cones/blue lights	Additional requirements / Remarks
(1)	(2)	3(a)	3(b)	(4)	(5)	(6)	(7)	(8)	(9)	(10)	(11)	(12)	(13)	(14)	(15)	(16)	(17)	(18)	(19)	(20)
1268	PETROLEUM DISTILLATES, N.O.S or PETROLEUM PRODUCTS, N.O.S. Flash point < 23°C with 175kPa≤vp50<300kPa	3	F1	II	3+(N1, N2, N3, CMR, F)	N	2	2	1	50	95		3	yes	T4 **(3)**	II B **(4)** (II B3)	yes	PP, EX, A	1	14; 22; 27; 44
1268	PETROLEUM DISTILLATES, N.O.S or PETROLEUM PRODUCTS, N.O.S. Flash point < 23°C with 110kPa≤vp50<175kPa	3	F1	II	3+(N1, N2, N3, CMR, F)	N	2	2		50	97		3	yes	T4 **(3)**	II B **(4)** (II B3)	yes	PP, EX, A	1	14; 22; 27; 44
1268	PETROLEUM DISTILLATES, N.O.S or PETROLEUM PRODUCTS, N.O.S. Flash point < 23°C with 110kPa≤vp50<150kPa	3	F1	II	3+(N1, N2, N3, CMR, F)	N	2	2	3	10	97		3	yes	T4 **(3)**	II B **(4)** (II B3)	yes	PP, EX, A	1	14; 22; 27; 44
1268	PETROLEUM DISTILLATES, N.O.S or PETROLEUM PRODUCTS, N.O.S. Flash point < 23°C with vp50 < 110 kPa	3	F1	II	3+(N1, N2, N3, CMR, F)	N	2	2		10	97		3	yes	T4 **(3)**	II B **(4)** (II B3)	yes	PP, EX, A	1	14; 22; 27; 44
1268	PETROLEUM DISTILLATES, N.O.S or PETROLEUM PRODUCTS, N.O.S. Flash point ≥ 23°C but ≤ 60°C	3	F1	III	3+(N1, N2, N3, CMR, F)	N	3	2			97		3	yes	T4 **(3)**	II B **(4)** (II B3)	yes	PP, EX, A	1	14; 22; 27; 44
1274	n-PROPANOL (propyl alcohol, normal)	3	F1	II	3	N	2	2		10	97	0.8	3	yes	T2 **(12)**	II B (II B1)	yes	PP, EX, A	1	
1274	n-PROPANOL (propyl alcohol, normal)	3	F1	III	3	N	3	2			97	0.8	3	yes	T2 **(12)**	II B (II B1)	yes	PP, EX, A	0	
1275	PROPIONALDEHYDE	3	F1	II	3+N3	C	2	2	3	50	95	0.81	2	yes	T4	II B (II B2)	yes	PP, EX, A	1	15; 23
1276	n-PROPYL ACETATE	3	F1	II	3+N3	N	2	2		10	97	0.88	3	yes	T1 **(12)**	II A	yes	PP, EX, A	1	
1277	PROPYLAMINE (1-aminopropane)	3	FC	II	3+8	C	2	2	3	50	95	0.72	2	yes	T2 **(12)**	II A	yes	PP, EP, EX, A	1	23
1278	1-CHLOROPROPANE (propyl chloride)	3	F1	II	3	C	2	2	3	50	95	0.89	2	yes	T1 **(12)**	II A	yes	PP, EX, A	1	23

UN No. or substance identification No.	Name and description	Class	Classification code	Packing group	Danger labels	Type of tank vessel	Cargo tank design	Cargo tank type	Cargo tank equipment	Opening pressure of the pressure relief valve / high-velocity vent valve in kPa	Maximum degree of filling in %	Relative density at 20°C	Type of sampling device	Pump-room below deck permitted	Temperature class	Explosion group	Anti-explosion protection required	Equipment required	Number of cones/blue lights	Additional requirements / Remarks
(1)	(2)	3(a)	3(b)	(4)	(5)	(6)	(7)	(8)	(9)	(10)	(11)	(12)	(13)	(14)	(15)	(16)	(17)	(18)	(19)	(20)
1279	1,2-DICHLOROPROPANE or PROPYL DICHLORIDE	3	F1	II	3+N2	C	2	2		45	95	1.16	2	yes	T1 **(12)**	II A **(7)**	yes	PP, EX, A	1	
1280	PROPYLENE OXIDE	3	F1	I	3+unst.+N3+CMR	C	1	1			95	0.83	1	yes	T2 **(12)**	II B (II B3)	yes	PP, EP, EX, TOX, A	1	2; 12; 31
1282	PYRIDINE	3	F1	II	3+N3	N	2	2		10	97	0.98	3	yes	T1 **(12)**	II A **(7)**	yes	PP, EX, A	1	
1289	SODIUM METHYLATE SOLUTION in alcohol	3	FC	III	3+8	N	3	2			97	0.969	3	yes	T2 **(12)**	II A	yes	PP, EP, EX, A	0	34
1294	TOLUENE	3	F1	II	3+N3	N	2	2		10	97	0.87	3	yes	T1 **(12)**	II A	yes	PP, EX, A	1	
1296	TRIETHYLAMINE	3	FC	II	3+8+N3	C	2	2		50	95	0.73	2	yes	T3	II A **(7)**	yes	PP, EP, EX, A	1	
1300	TURPENTINE SUBSTITUTE	3	F1	III	3+N2+F	N	3	3			97	0.78	3	yes	T3	II B **(4)**	yes	PP, EX, A	0	
1301	VINYL ACETATE, STABILIZED	3	F1	II	3+unst.+N3	N	2	2		10	97	0.93	2	yes	T2 **(12)**	II A	yes	PP, EX, A	1	3; 5; 16
1307	XYLENES (o- XYLENE)	3	F1	III	3+N2	N	3	3			97	0.88	3	yes	T1 **(12)**	II A	yes	PP, EX, A	0	
1307	XYLENES (m- XYLENE)	3	F1	III	3+N2	N	3	3			97	0.86	3	yes	T1 **(12)**	II A	yes	PP, EX, A	0	
1307	XYLENES (p- XYLENE)	3	F1	III	3+N2	N	3	3	2		97	0.86	3	yes	T1 **(12)**	II A	yes	PP, EX, A	0	6:+17°C; 17
1307	XYLENES (mixture with melting point ≤ 0°C)	3	F1	II	3+N2	N	3	3			97		3	yes	T1 **(12)**	II A	yes	PP, EX, A	1	
1307	XYLENES (mixture with melting point ≤ 0°C)	3	F1	III	3+N2	N	3	3			97		3	yes	T1 **(12)**	II A	yes	PP, EX, A	0	

UN No. or substance identification No.	Name and description	Class	Classification code	Packing group	Danger labels	Type of tank vessel	Cargo tank design	Cargo tank type	Cargo tank equipment	Opening pressure of the pressure relief valve / high-velocity vent valve in kPa	Maximum degree of filling in %	Relative density at 20°C	Type of sampling device	Pump-room below deck permitted	Temperature class	Explosion group	Anti-explosion protection required	Equipment required	Number of cones/blue lights	Additional requirements / Remarks
(1)	(2)	3(a)	3(b)	(4)	(5)	(6)	(7)	(8)	(9)	(10)	(11)	(12)	(13)	(14)	(15)	(16)	(17)	(18)	(19)	(20)
1307	XYLENES (mixture with 0°C < melting point < 13°C)	3	F1	III	3+N2	N	3	3	2		97		3	yes	T1 **(12)**	II A	yes	PP, EX, A	0	6:+17°C; 17
1541	ACETONE CYANOHYDRIN, STABILIZED	6.1	T1	I	6.1+unst.+N1	C	2	2		50	95	0.932	1	no			no	PP, EP, TOX, A	2	3
1545	ALLYL ISOTHIOCYANATE, STABILIZED	6.1	TF1	II	6.1+3+unst.	C	2	2		30	95	1.02	1	no	T4 **(3)**	II B **(4)**	yes	PP, EP, EX, TOX, A	2	2; 3
1547	ANILINE	6.1	T1	II	6.1+N1	C	2	2		25	95	1.02	2	no			no	PP, EP, TOX, A	2	
1578	CHLORONITROBENZENES, SOLID, MOLTEN (p-CHLORONITROBENZENE)	6.1	T2	II	6.1+N2+S	C	2	1	2	25	95	1.37	2	no	T1 **(12)**	II B (II B3 **(11)**)	yes	PP, EP, EX, TOX, A	2	7; 17; 26
1578	CHLORONITROBENZENES, SOLID, MOLTEN (p-CHLORONITROBENZENE)	6.1	T2	II	6.1+N2+S	C	2	1	4	25	95	1.37	2	no			no	PP, EP, TOX, A	2	7; 17; 20:+112°C; 26
1591	o-DICHLOROBENZENE	6.1	T1	III	6.1+N1+S	C	2	2		25	95	1.32	2	no			no	PP, EP, TOX, A	0	
1593	DICHLOROMETHANE (methyl chloride)	6.1	T1	III	6.1	C	2	2	3	50	95	1.33	2	no			no	PP, EP, TOX, A	0	23
1594	DIETHYL SULPHATE	6.1	T1	II	6.1+N2+CMR	C	2	2		25	95	1.18	2	no			no	PP, EP, TOX, A	2	
1595	DIMETHYL SULPHATE	6.1	TC1	I	6.1+8+N3+CMR	C	2	2		25	95	1.33	1	no			no	PP, EP, TOX, A	2	
1604	ETHYLENEDIAMINE	8	CF1	II	8+3+N3	N	3	2			97	0.9	3	yes	T2 **(12)**	II A	yes	PP, EP, EX, A	1	6:+12°C; 17; 34
1605	ETHYLENE DIBROMIDE	6.1	T1	I	6.1+N2+CMR	C	2	2		30	95	2.18	1	no			no	PP, EP, TOX, A	2	6:+14°C; 17

UN No. or substance identification No.	Name and description	Class	Classification code	Packing group	Danger labels	Type of tank vessel	Cargo tank design	Cargo tank type	Cargo tank equipment	Opening pressure of the pressure relief valve / high-velocity vent valve in kPa	Maximum degree of filling in %	Relative density at 20°C	Type of sampling device	Pump-room below deck permitted	Temperature class	Explosion group	Anti-explosion protection required	Equipment required	Number of cones/blue lights	Additional requirements / Remarks
(1)	(2)	3(a)	3(b)	(4)	(5)	(6)	(7)	(8)	(9)	(10)	(11)	(12)	(13)	(14)	(15)	(16)	(17)	(18)	(19)	(20)
1648	ACETONITRILE (methyl cyanide)	3	F1	II	3	N	2	2		10	97	0.78	3	yes	T1 **(12)**	II A	yes	PP, EX, A	1	
1662	NITROBENZENE	6.1	T1	II	6.1+N2	C	2	2	2	25	95	1.21	2	no	T1 **(12)**	II B	yes	PP, EP, EX, TOX, A	2	6:+10°C; 17
1663	NITROPHENOLS	6.1	T2	III	6.1+N3+S	C	2	2	2	25	95		2	no	T1 **(12)**	II B (II B3 **(11)**)	yes	PP, EP, EX, TOX, A	0	7; 17
1663	NITROPHENOLS	6.1	T2	III	6.1+N3+S	C	2	2	4	25	95		2	no			no	PP, EP, TOX, A	0	7; 17; 20:+65°C
1664	NITROTOLUENES, LIQUID (o-NITRO-TOLUENE)	6.1	T1	II	6.1+N2+CMR+S	C	2	2		25	95	1.16	2	no			no	PP, EP, TOX, A	2	
1708	TOLUIDINES, LIQUID (o-TOLUIDINE)	6.1	T1	II	6.1+N1+CMR	C	2	2		25	95	1	2	no			no	PP, EP, TOX, A	2	
1708	TOLUIDINES, LIQUID (m-TOLUIDINE)	6.1	T1	II	6.1+N1	C	2	2		25	95	1.03	2	no			no	PP, EP, TOX, A	2	
1710	TRICHLOROETHYLENE	6.1	T1	III	6.1+N2+CMR	C	2	2		50	95	1.46	2	no			no	PP, EP, TOX, A	0	15
1715	ACETIC ANHYDRIDE	8	CF1	II	8+3	N	2	3		10	97	1.08	3	yes	T2 **(12)**	II A	yes	PP, EP, EX, A	1	34
1717	ACETYL CHLORIDE	3	FC	II	3+8	C	2	2	3	50	95	1.1	2	yes	T2 **(12)**	II A **(7)**	yes	PP, EP, EX, A	1	23
1718	BUTYL ACIDE PHOSPHATE	8	C3	III	8+N3	N	4	3			97	0.98	3	yes			no	PP, EP	0	34
1719	CAUSTIC ALKALI LIQUID, N.O.S. vp50 ≤ 12.5 kPa	8	C5	II	8+(N1, N2, N3, CMR, F or S)	N	4	2			97		3	yes			no	PP, EP	0	22; 27; 30; 34
1719	CAUSTIC ALKALI LIQUID, N.O.S. vp50 > 12.5 kPa	8	C5	II	8+(N1, N2, N3, CMR, F or S)	N	2	3		10	97		3	yes			no	PP, EP	0	22; 27; 30; 34

UN No. or substance identification No.	Name and description	Class	Classification code	Packing group	Danger labels	Type of tank vessel	Cargo tank design	Cargo tank type	Cargo tank equipment	Opening pressure of the pressure relief valve / high-velocity vent valve in kPa	Maximum degree of filling in %	Relative density at 20°C	Type of sampling device	Pump-room below deck permitted	Temperature class	Explosion group	Anti-explosion protection required	Equipment required	Number of cones/blue lights	Additional requirements / Remarks
(1)	(2)	3(a)	3(b)	(4)	(5)	(6)	(7)	(8)	(9)	(10)	(11)	(12)	(13)	(14)	(15)	(16)	(17)	(18)	(19)	(20)
1719	CAUSTIC ALKALI LIQUID, N.O.S.	8	C5	III	8+(N1, N2, N3, CMR, F or S)	N	4	2			97		3	yes			no	PP, EP	0	22; 27; 30; 34
1738	BENZYL CHLORIDE	6.1	TC1	II	6.1+8+3+N3+CMR+S	C	2	2		25	95	1.1	2	no	T1 **(12)**	II A **(7)**	yes	PP, EP, EX, TOX, A	2	
1742	BORON TRIFLUORIDE ACETIC ACID COMPLEX, LIQUID	8	C3	II	8	N	4	2			97	1.35	3	yes			no	PP, EP	0	34
1750	CHLORACETIC ACID SOLUTION	6.1	TC1	II	6.1+8+N1	C	2	2	2	25	95	1.58	2	no	T1 **(12)**	II A	yes	PP, EP, EX, TOX, A	2	7; 17
1750	CHLORACETIC ACID SOLUTION	6.1	TC1	II	6.1+8+N1	C	2	1	4	25	95	1.58	2	no			no	PP, EP, TOX, A	2	7; 17; 20:+111°C; 26
1760	CORROSIVE LIQUID, N.O.S. (SODIUM MERCAPTOBENZOTHIAZOLE, 50% AQUEOUS SOLUTION)	8	C9	II	8+N1+F	C	2	2		40	95	1.25	2	yes			no	PP, EP	0	
1760	CORROSIVE LIQUID, N.O.S. (FATTY ALCOHOL, C12-C14)	8	C9	III	8+F	N	4	3			97	0.89	3	yes			no	PP, EP	0	34
1760	CORROSIVE LIQUID, N.O.S. (ETHYLENEDIAMINE- TETRAACETIC ACID, TETRASODIUM SALT, 40% AQUEOUS SOLUTION)	8	C9	III	8+N2	N	4	3			97	1.28	3	yes			no	PP, EP	0	34
1760	CORROSIVE LIQUID, N.O.S. vp50≤12.5kPa	8	C9	I	8+(N1, N2, N3, CMR, F or S)	N	4	2			97		3	yes			no	PP, EP	0	22; 27; 34
1760	CORROSIVE LIQUID, N.O.S. vp50>12.5kPa	8	C9	I	8+(N1, N2, N3, CMR, F or S)	N	2	3		10	97		3	yes			no	PP, EP	0	22; 27; 34
1760	CORROSIVE LIQUID, N.O.S. vp50 ≤ 12.5 kPa	8	C9	II	8+(N1, N2, N3, CMR, F or S)	N	4	2			97		3	yes			no	PP, EP	0	22; 27; 34
1760	CORROSIVE LIQUID, N.O.S. vp50 > 12.5 kPa	8	C9	II	8+(N1, N2, N3, CMR, F or S)	N	2	3		10	97		3	yes			no	PP, EP	0	22; 27; 34

UN No. or substance identification No.	Name and description	Class	Classification code	Packing group	Danger labels	Type of tank vessel	Cargo tank design	Cargo tank type	Cargo tank equipment	Opening pressure of the pressure relief valve / high-velocity vent valve in kPa	Maximum degree of filling in %	Relative density at 20°C	Type of sampling device	Pump-room below deck permitted	Temperature class	Explosion group	Anti-explosion protection required	Equipment required	Number of cones/blue lights	Additional requirements / Remarks
(1)	(2)	3(a)	3(b)	(4)	(5)	(6)	(7)	(8)	(9)	(10)	(11)	(12)	(13)	(14)	(15)	(16)	(17)	(18)	(19)	(20)
1760	CORROSIVE LIQUID, N.O.S.	8	C9	III	8+(N1, N2, N3, CMR, F or S)	N	4	2			97		3	yes			no	PP, EP	0	22; 27; 34
1764	DICHLOROACETIC ACID	8	C3	II	8+N1	N	3	3			97	1.56	2	yes	T1 **(12)**	II A	yes	PP, EP, EX, A	0	6:+13°C; 17
1778	FLUOROSILICIC ACID	8	C1	II	8+N3	N	2	3		10	97		3	yes			no	PP, EP	0	34
1779	FORMIC ACID with more than 85% acid by mass	8	CF1	II	8+3+N3	N	2	3		10	97	1.22	3	yes	T1 **(12)**	II A	yes	PP, EP, EX, A	1	6:+12°C; 17; 34
1780	FUMARYL CHLORIDE	8	C3	II	8+N3	N	2	3		10	97	1.41	3	yes			no	PP, EP	0	8; 34
1783	HEXAMETHYLENEDIAMINE SOLUTION	8	C7	II	8+N3	N	3	2	2		97		3	yes	T4 **(3)**	II A	yes	PP, EP, EX, A	0	7; 17; 34
1783	HEXAMETHYLENEDIAMINE SOLUTION	8	C7	III	8+N3	N	3	2	2		97		3	yes	T3	II A	yes	PP, EP, EX, A	0	7; 17; 34
1789	HYDROCHLORIC ACID	8	C1	II	8	N	2	3		10	97		3	yes			no	PP, EP	0	34
1789	HYDROCHLORIC ACID	8	C1	III	8	N	4	3			97		3	yes			no	PP, EP	0	34
1805	PHOSPHORIC ACID, SOLUTION, WITH MORE THAN 80% (VOLUME) ACID	8	C1	III	8	N	4	3	2		95	> 1.6	3	yes			no	PP, EP	0	7; 17; 22; 34
1805	PHOSPHORIC ACID, SOLUTION, WITH 80% (VOLUME) ACID, OR LESS	8	C1	III	8	N	4	3			97	1.00 - 1.6	3	yes			no	PP, EP	0	22; 34
1814	POTASSIUM HYDROXIDE SOLUTION	8	C5	II	8+N3	N	4	2			97		3	yes			no	PP, EP	0	30; 34
1814	POTASSIUM HYDROXIDE SOLUTION	8	C5	III	8+N3	N	4	2			97		3	yes			no	PP, EP	0	30; 34
1823	SODIUM HYDROXIDE, SOLID	8	C6	II	8+N3	N	4	1	4		95	2.13	3	yes			no	PP, EP	0	7; 17; 34
1824	SODIUM HYDROXIDE SOLUTION	8	C5	II	8+N3	N	4	2			97		3	yes			no	PP, EP	0	30; 34
1824	SODIUM HYDROXIDE SOLUTION	8	C5	III	8+N3	N	4	2			97		3	yes			no	PP, EP	0	30; 34
1830	SULPHURIC ACID with more than 51% acid	8	C1	II	8+N3	N	4	3			97	1.4 - 1.84	3	yes			no	PP, EP	0	8; 22; 30; 34

UN No. or substance identification No.	Name and description	Class	Classification code	Packing group	Danger labels	Type of tank vessel	Cargo tank design	Cargo tank type	Cargo tank equipment	Opening pressure of the pressure relief valve / high-velocity vent valve in kPa	Maximum degree of filling in %	Relative density at 20°C	Type of sampling device	Pump-room below deck permitted	Temperature class	Explosion group	Anti-explosion protection required	Equipment required	Number of cones/blue lights	Additional requirements / Remarks
(1)	(2)	3(a)	3(b)	(4)	(5)	(6)	(7)	(8)	(9)	(10)	(11)	(12)	(13)	(14)	(15)	(16)	(17)	(18)	(19)	(20)
1831	SULPHURIC ACID, FUMING	8	CT1	I	8+6.1	C	2	2		50	95	1.94	1	no			no	PP, EP, TOX, A	2	8
1832	SULPHURIC ACID, SPENT	8	C1	II	8	N	4	3			97		3	yes			no	PP, EP	0	8; 30; 34
1846	CARBON TETRACHLORIDE	6.1	T1	II	6.1+N2+S	C	2	2	3	50	95	1.59	2	no			no	PP, EP, TOX, A	2	23
1848	PROPIONIC ACID with not less than 10% and less than 90% acid by mass	8	C3	III	8+N3	N	3	3			97	0.99	3	yes			no	PP, EP	0	34
1863	FUEL, AVIATION, TURBINE ENGINE WITH MORE THAN 10% BENZENE INITIAL BOILING POINT ≤ 60°C	3	F1	I	3+CMR+F+ (N1, N2, N3)	C	1	1			95		1	yes	T4 **(3)**	II B **(4)**	yes	PP, EP, EX, TOX, A	1	43
1863	FUEL, AVIATION, TURBINE ENGINE WITH MORE THAN 10% BENZENE INITIAL BOILING POINT ≤ 60°C	3	F1	II	3+CMR+F+ (N1, N2, N3)	C	1	1			95		1	yes	T4 **(3)**	II B **(4)**	yes	PP, EP, EX, TOX, A	1	
1863	FUEL, AVIATION, TURBINE ENGINE WITH MORE THAN 10% BENZENE 60°C < INITIAL BOILING POINT ≤ 85°C	3	F1	II	3+CMR+F+ (N1, N2, N3)	C	2	2	3	50	95		2	yes	T4 **(3)**	II B **(4)**	yes	PP, EP, EX, TOX, A	1	23; 38
1863	FUEL, AVIATION, TURBINE ENGINE WITH MORE THAN 10% BENZENE 85°C < INITIAL BOILING POINT ≤ 115°C	3	F1	II	3+CMR+F+ (N1, N2, N3)	C	2	2		50	95		2	yes	T4 **(3)**	II B **(4)**	yes	PP, EP, EX, TOX, A	1	
1863	FUEL, AVIATION, TURBINE ENGINE WITH MORE THAN 10% BENZENE INITIAL BOILING POINT > 115°C	3	F1	II	3+CMR+F+ (N1, N2, N3)	C	2	2		35	95		2	yes	T4 **(3)**	II B **(4)**	yes	PP, EP, EX, TOX, A	1	
1863	FUEL, AVIATION, TURBINE ENGINE WITH MORE THAN 10% BENZENE INITIAL BOILING POINT ≤ 60°C	3	F1	I	3+CMR+F+ (N1, N2, N3)	C	1	1			95		1	yes	T4 **(3)**	II B **(4)** (II B3)	yes	PP, EP, EX, TOX, A	1	43; 44

UN No. or substance identification No.	Name and description	Class	Classification code	Packing group	Danger labels	Type of tank vessel	Cargo tank design	Cargo tank type	Cargo tank equipment	Opening pressure of the pressure relief valve / high-velocity vent valve in kPa	Maximum degree of filling in %	Relative density at 20°C	Type of sampling device	Pump-room below deck permitted	Temperature class	Explosion group	Anti-explosion protection required	Equipment required	Number of cones/blue lights	Additional requirements / Remarks
(1)	(2)	3(a)	3(b)	(4)	(5)	(6)	(7)	(8)	(9)	(10)	(11)	(12)	(13)	(14)	(15)	(16)	(17)	(18)	(19)	(20)
1863	FUEL, AVIATION, TURBINE ENGINE WITH MORE THAN 10% BENZENE INITIAL BOILING POINT ≤ 60°C	3	F1	II	3+CMR+F+ (N1, N2, N3)	C	1	1			95		1	yes	T4 **(3)**	II B **(4)** (II B3)	yes	PP, EP, EX, TOX, A	1	44
1863	FUEL, AVIATION, TURBINE ENGINE WITH MORE THAN 10% BENZENE 60°C < INITIAL BOILING POINT ≤ 85°C	3	F1	II	3+CMR+F+ (N1, N2, N3)	C	2	2	3	50	95		2	yes	T4 **(3)**	II B **(4)** (II B3)	yes	PP, EP, EX, TOX, A	1	23; 38; 44
1863	FUEL, AVIATION, TURBINE ENGINE WITH MORE THAN 10% BENZENE 85°C < INITIAL BOILING POINT ≤ 115°C	3	F1	II	3+CMR+F+ (N1, N2, N3)	C	2	2		50	95		2	yes	T4 **(3)**	II B **(4)** (II B3)	yes	PP, EP, EX, TOX, A	1	44
1863	FUEL, AVIATION, TURBINE ENGINE WITH MORE THAN 10% BENZENE INITIAL BOILING POINT > 115°C	3	F1	II	3+CMR+F+ (N1, N2, N3)	C	2	2		35	95		2	yes	T4 **(3)**	II B **(4)** (II B3)	yes	PP, EP, EX, TOX, A	1	44
1863	FUEL, AVIATION, TURBINE ENGINE Flash point < 23°C with 175 kPa ≤ vp50 < 300 kPa	3	F1	I	3+(N1, N2, N3, CMR, F)	N	1	1			95		1	yes	T4 **(3)**	II B **(4)**	yes	PP, EX, A	1	14; 22
1863	FUEL, AVIATION, TURBINE ENGINE Flash point < 23°C with 175 kPa ≤ vp50 < 300 kPa	3	F1	I	3+(N1, N2, N3, CMR, F)	N	2	2	1	50	95		3	yes	T4 **(3)**	II B **(4)**	yes	PP, EX, A	1	14; 22
1863	FUEL, AVIATION, TURBINE ENGINE Flash point < 23°C with 110 kPa ≤ vp50 < 175 kPa	3	F1	I	3+(N1, N2, N3, CMR, F)	N	2	2		50	97		3	yes	T4 **(3)**	II B **(4)**	yes	PP, EX, A	1	14; 22
1863	FUEL, AVIATION, TURBINE ENGINE Flash point < 23°C with 110 kPa ≤ vp50 < 150 kPa	3	F1	I	3+(N1, N2, N3, CMR, F)	N	2	2	3	10	97		3	yes	T4 **(3)**	II B **(4)**	yes	PP, EX, A	1	14; 22
1863	FUEL, AVIATION, TURBINE ENGINE Flash point < 23°C with vp50 < 110 kPa	3	F1	I	3+(N1, N2, N3, CMR, F)	N	2	2		10	97		3	yes	T4 **(3)**	II B **(4)**	yes	PP, EX, A	1	14; 22

UN No. or substance identification No.	Name and description	Class	Classification code	Packing group	Danger labels	Type of tank vessel	Cargo tank design	Cargo tank type	Cargo tank equipment	Opening pressure of the pressure relief valve / high-velocity vent valve in kPa	Maximum degree of filling in %	Relative density at 20°C	Type of sampling device	Pump-room below deck permitted	Temperature class	Explosion group	Anti-explosion protection required	Equipment required	Number of cones/blue lights	Additional requirements / Remarks
(1)	(2)	3(a)	3(b)	(4)	(5)	(6)	(7)	(8)	(9)	(10)	(11)	(12)	(13)	(14)	(15)	(16)	(17)	(18)	(19)	(20)
1863	FUEL, AVIATION, TURBINE ENGINE Flash point < 23°C with 175 kPa ≤ vp50 < 300 kPa	3	F1	II	3+(N1, N2, N3, CMR, F)	N	1	1			95		1	yes	T4 **(3)**	II B **(4)**	yes	PP, EX, A	1	14; 22
1863	FUEL, AVIATION, TURBINE ENGINE Flash point < 23°C with 175 kPa ≤ vp50 < 300 kPa	3	F1	II	3+(N1, N2, N3, CMR, F)	N	2	2	1	50	95		3	yes	T4 **(3)**	II B **(4)**	yes	PP, EX, A	1	14; 22
1863	FUEL, AVIATION, TURBINE ENGINE Flash point < 23°C with 110 kPa ≤ vp50 <175 kPa	3	F1	II	3+(N1, N2, N3, CMR, F)	N	2	2		50	97		3	yes	T4 **(3)**	II B **(4)**	yes	PP, EX, A	1	14; 22
1863	FUEL, AVIATION, TURBINE ENGINE Flash point < 23°C with 110 kPa ≤ vp50 < 150 kPa	3	F1	II	3+(N1, N2, N3, CMR, F)	N	2	2	3	10	97		3	yes	T4 **(3)**	II B **(4)**	yes	PP, EX, A	1	14; 22
1863	FUEL, AVIATION, TURBINE ENGINE Flash point < 23°C with vp50 < 110 kPa	3	F1	II	3+(N1, N2, N3, CMR, F)	N	2	2		10	97		3	yes	T4 **(3)**	II B **(4)**	yes	PP, EX, A	1	14; 22
1863	FUEL, AVIATION, TURBINE ENGINE Flash point ≥ 23°C but ≤ 60°C	3	F1	III	3+(N1, N2, N3, CMR, F)	N	3	2			97		3	yes	T4 **(3)**	II B **(4)**	yes	PP, EX, A	1	14; 22
1863	FUEL, AVIATION, TURBINE ENGINE Flash point < 23°C with 175 kPa ≤ vp50 < 300 kPa	3	F1	I	3+(N1, N2, N3, CMR, F)	N	1	1			95		1	yes	T4 **(3)**	II B **(4)** (II B3)	yes	PP, EX, A	1	14; 22; 44
1863	FUEL, AVIATION, TURBINE ENGINE Flash point < 23°C with 175 kPa ≤ vp50 < 300 kPa	3	F1	I	3+(N1, N2, N3, CMR, F)	N	2	2	1	50	95		3	yes	T4 **(3)**	II B **(4)** (II B3)	yes	PP, EX, A	1	14; 22; 44
1863	FUEL, AVIATION, TURBINE ENGINE Flash point < 23°C with 110 kPa ≤ vp50 < 175 kPa	3	F1	I	3+(N1, N2, N3, CMR, F)	N	2	2		50	97		3	yes	T4 **(3)**	II B **(4)** (II B3)	yes	PP, EX, A	1	14; 22; 44
1863	FUEL, AVIATION, TURBINE ENGINE Flash point < 23°C with 110 kPa ≤ vp50 < 150 kPa	3	F1	I	3+(N1, N2, N3, CMR, F)	N	2	2	3	10	97		3	yes	T4 **(3)**	II B **(4)** (II B3)	yes	PP, EX, A	1	14; 22; 44

UN No. or substance identification No.	Name and description	Class	Classification code	Packing group	Danger labels	Type of tank vessel	Cargo tank design	Cargo tank type	Cargo tank equipment	Opening pressure of the pressure relief valve / high-velocity vent valve in kPa	Maximum degree of filling in %	Relative density at 20°C	Type of sampling device	Pump-room below deck permitted	Temperature class	Explosion group	Anti-explosion protection required	Equipment required	Number of cones/blue lights	Additional requirements / Remarks
(1)	(2)	3(a)	3(b)	(4)	(5)	(6)	(7)	(8)	(9)	(10)	(11)	(12)	(13)	(14)	(15)	(16)	(17)	(18)	(19)	(20)
1863	FUEL, AVIATION, TURBINE ENGINE Flash point < 23°C with vp50 < 110 kPa	3	F1	I	3+(N1, N2, N3, CMR, F)	N	2	2		10	97		3	yes	T4 **(3)**	II B **(4)** (II B3)	yes	PP, EX, A	1	14; 22; 44
1863	FUEL, AVIATION, TURBINE ENGINE Flash point < 23°C with 175 kPa ≤ vp50 < 300 kPa	3	F1	II	3+(N1, N2, N3, CMR, F)	N	1	1			95		1	yes	T4 **(3)**	II B **(4)** (II B3)	yes	PP, EX, A	1	14; 22; 44
1863	FUEL, AVIATION, TURBINE ENGINE Flash point < 23°C with 175 kPa ≤ vp50 < 300 kPa	3	F1	II	3+(N1, N2, N3, CMR, F)	N	2	2	1	50	95		3	yes	T4 **(3)**	II B **(4)** (II B3)	yes	PP, EX, A	1	14; 22; 44
1863	FUEL, AVIATION, TURBINE ENGINE Flash point < 23°C with 110 kPa ≤ vp50 <175 kPa	3	F1	II	3+(N1, N2, N3, CMR, F)	N	2	2		50	97		3	yes	T4 **(3)**	II B **(4)** (II B3)	yes	PP, EX, A	1	14; 22; 44
1863	FUEL, AVIATION, TURBINE ENGINE Flash point < 23°C with 110 kPa ≤ vp50 < 150 kPa	3	F1	II	3+(N1, N2, N3, CMR, F)	N	2	2	3	10	97		3	yes	T4 **(3)**	II B **(4)** (II B3)	yes	PP, EX, A	1	14; 22; 44
1863	FUEL, AVIATION, TURBINE ENGINE Flash point < 23°C with vp50 < 110 kPa	3	F1	II	3+(N1, N2, N3, CMR, F)	N	2	2		10	97		3	yes	T4 **(3)**	II B **(4)** (II B3)	yes	PP, EX, A	1	14; 22; 44
1863	FUEL, AVIATION, TURBINE ENGINE Flash point ≥ 23°C but ≤ 60°C	3	F1	III	3+(N1, N2, N3, CMR, F)	N	3	2			97		3	yes	T4 **(3)**	II B **(4)** (II B3)	yes	PP, EX, A	1	14; 22; 44
1888	CHLOROFORM	6.1	T1	III	6.1+N2+CMR	C	2	2	3	50	95	1.48	2	no			no	PP, EP, TOX, A	0	23
1897	TETRACHLOROETHYLENE	6.1	T1	III	6.1+N2+S	C	2	2		50	95	1.62	2	no			no	PP, EP, TOX, A	0	
1912	METHYL CHLORIDE AND METHYLENE CHLORIDE MIXTURE	2	2F		2.1	G	1	1			91		1	no	T1 **(12)**	II A **(7)**	yes	PP, EX, A	1	2; 31

UN No. or substance identification No.	Name and description	Class	Classification code	Packing group	Danger labels	Type of tank vessel	Cargo tank design	Cargo tank type	Cargo tank equipment	Opening pressure of the pressure relief valve / high-velocity vent valve in kPa	Maximum degree of filling in %	Relative density at 20°C	Type of sampling device	Pump-room below deck permitted	Temperature class	Explosion group	Anti-explosion protection required	Equipment required	Number of cones/blue lights	Additional requirements / Remarks
(1)	(2)	3(a)	3(b)	(4)	(5)	(6)	(7)	(8)	(9)	(10)	(11)	(12)	(13)	(14)	(15)	(16)	(17)	(18)	(19)	(20)
1915	CYCLOHEXANONE	3	F1	III	3	N	3	2			97	0.95	3	yes	T2 **(12)**	II A	yes	PP, EX, A	0	
1917	ETHYL ACRYLATE, STABILIZED	3	F1	II	3+unst.+N3	C	2	2		40	95	0.92	1	yes	T2 **(12)**	II B	yes	PP, EX, A	1	3; 5
1918	ISOPROPYLBENZENE (cumene)	3	F1	III	3+N2	N	3	3			97	0.86	3	yes	T2 **(12)**	II A **(7)**	yes	PP, EX, A	0	
1919	METHYL ACRYLATE, STABILIZED	3	F1	II	3+unst.+N3	C	2	2	3	50	95	0.95	1	yes	T2 **(12)**	II B	yes	PP, EX, A	1	3; 5; 23
1920	NONANES	3	F1	III	3+N2+F	N	3	3			97	0.70 - 0.75	3	yes	T3	II A	yes	PP, EX, A	0	
1922	PYRROLIDINE	3	FC	II	3+8	C	2	2		50	95	0.86	2	yes	T2 **(12)**	II A **(6)**	yes	PP, EP, EX, A	1	
1965	HYDROCARBON GAS MIXTURE, LIQ-UEFIED, N.O.S., (MIXTURE A)	2	2F		2.1	G	1	1			91		1	no	T4 **(3)**	II B **(4)**	yes	PP, EX, A	1	2; 31
1965	HYDROCARBON GAS MIXTURE, LIQ-UEFIED, N.O.S., (MIXTURE A0)	2	2F		2.1	G	1	1			91		1	no	T4 **(3)**	II B **(4)**	yes	PP, EX, A	1	2; 31
1965	HYDROCARBON GAS MIXTURE, LIQ-UEFIED, N.O.S., (MIXTURE A01)	2	2F		2.1	G	1	1			91		1	no	T4 **(3)**	II B **(4)**	yes	PP, EX, A	1	2; 31
1965	HYDROCARBON GAS MIXTURE, LIQ-UEFIED, N.O.S., (MIXTURE A02)	2	2F		2.1	G	1	1			91		1	no	T4 **(3)**	II B **(4)**	yes	PP, EX, A	1	2; 31
1965	HYDROCARBON GAS MIXTURE, LIQ-UEFIED, N.O.S., (MIXTURE A1)	2	2F		2.1	G	1	1			91		1	no	T4 **(3)**	II B **(4)**	yes	PP, EX, A	1	2; 31
1965	HYDROCARBON GAS MIXTURE, LIQ-UEFIED, N.O.S., (MIXTURE B)	2	2F		2.1	G	1	1			91		1	no	T4 **(3)**	II B **(4)**	yes	PP, EX, A	1	2; 31
1965	HYDROCARBON GAS MIXTURE, LIQ-UEFIED, N.O.S., (MIXTURE B1)	2	2F		2.1	G	1	1			91		1	no	T4 **(3)**	II B **(4)**	yes	PP, EX, A	1	2; 31

UN No. or substance identification No.	Name and description	Class	Classification code	Packing group	Danger labels	Type of tank vessel	Cargo tank design	Cargo tank type	Cargo tank equipment	Opening pressure of the pressure relief valve / high-velocity vent valve in kPa	Maximum degree of filling in %	Relative density at 20°C	Type of sampling device	Pump-room below deck permitted	Temperature class	Explosion group	Anti-explosion protection required	Equipment required	Number of cones/blue lights	Additional requirements / Remarks
(1)	(2)	3(a)	3(b)	(4)	(5)	(6)	(7)	(8)	(9)	(10)	(11)	(12)	(13)	(14)	(15)	(16)	(17)	(18)	(19)	(20)
1965	HYDROCARBON GAS MIXTURE, LIQ-UEFIED, N.O.S., (MIXTURE B2)	2	2F		2.1	G	1	1			91		1	no	T4 **(3)**	II B **(4)**	yes	PP, EX, A	1	2; 31
1965	HYDROCARBON GAS MIXTURE, LIQ-UEFIED, N.O.S., (MIXTURE C)	2	2F		2.1	G	1	1			91		1	no	T4 **(3)**	II B **(4)**	yes	PP, EX, A	1	2; 31
1965	HYDROCARBON GAS MIXTURE, REFRIGERATED, N.O.S.	2	3F		2.1 + CMR	G	2	4	1; 3		95		1	no	T4 **(3)**	II B **(4)**	yes	PP, EX, A, EP, TOX	1	2; 31
1965	HYDROCARBON GAS MIXTURE, REFRIGERATED, N.O.S., (MIXTURE A)	2	3F		2.1	G	2	4	1; 3		95		1	no	T4 **(3)**	II B **(4)**	yes	PP, EX, A	1	2; 31
1965	HYDROCARBON GAS MIXTURE, REFRIGERATED, N.O.S., (MIXTURE A0)	2	3F		2.1	G	2	4	1; 3		95		1	no	T4 **(3)**	II B **(4)**	yes	PP, EX, A	1	2; 31
1965	HYDROCARBON GAS MIXTURE, REFRIGERATED, N.O.S., (MIXTURE A01)	2	3F		2.1	G	2	4	1; 3		95		1	no	T4 **(3)**	II B **(4)**	yes	PP, EX, A	1	2; 31
1965	HYDROCARBON GAS MIXTURE, REFRIGERATED, N.O.S., (MIXTURE A02)	2	3F		2.1	G	2	4	1; 3		95		1	no	T4 **(3)**	II B **(4)**	yes	PP, EX, A	1	2; 31
1965	HYDROCARBON GAS MIXTURE, REFRIGERATED, N.O.S., (MIXTURE A1)	2	3F		2.1	G	2	4	1; 3		95		1	no	T4 **(3)**	II B **(4)**	yes	PP, EX, A	1	2; 31
1965	HYDROCARBON GAS MIXTURE, REFRIGERATED, N.O.S., (MIXTURE B)	2	3F		2.1	G	2	4	1; 3		95		1	no	T4 **(3)**	II B **(4)**	yes	PP, EX, A	1	2; 31
1965	HYDROCARBON GAS MIXTURE, REFRIGERATED, N.O.S., (MIXTURE B1)	2	3F		2.1	G	2	4	1; 3		95		1	no	T4 **(3)**	II B **(4)**	yes	PP, EX, A	1	2; 31
1965	HYDROCARBON GAS MIXTURE, REFRIGERATED, N.O.S., (MIXTURE B2)	2	3F		2.1	G	2	4	1; 3		95		1	no	T4 **(3)**	II B **(4)**	yes	PP, EX, A	1	2; 31
1965	HYDROCARBON GAS MIXTURE, REFRIGERATED, N.O.S., (MIXTURE C)	2	3F		2.1	G	2	4	1; 3		95		1	no	T4 **(3)**	II B **(4)**	yes	PP, EX, A	1	2; 31

UN No. or substance identification No.	Name and description	Class	Classification code	Packing group	Danger labels	Type of tank vessel	Cargo tank design	Cargo tank type	Cargo tank equipment	Opening pressure of the pressure relief valve / high-velocity vent valve in kPa	Maximum degree of filling in %	Relative density at 20°C	Type of sampling device	Pump-room below deck permitted	Temperature class	Explosion group	Anti-explosion protection required	Equipment required	Number of cones/blue lights	Additional requirements / Remarks
(1)	(2)	3(a)	3(b)	(4)	(5)	(6)	(7)	(8)	(9)	(10)	(11)	(12)	(13)	(14)	(15)	(16)	(17)	(18)	(19)	(20)
1969	ISOBUTANE (contains less than 0.1% 1.3-butadiene)	2	2F		2.1	G	1	1			91		1	no	T2 **(1)** **(12)**	II A **(6)**	yes	PP, EX, A	1	2; 31
1969	ISOBUTANE (with 0.1% or more 1.3-butadiene)	2	2F		2.1+CMR	G	1	1			91		1	no	T2 **(12)**	II A **(6)**	yes	PP, EP, EX, TOX, A	1	2; 31
1972	METHANE REFRIGERATED LIQUID or NATURAL GAS, REFRIGERATED LIQUEFIED, with high methane content	2	3F		2.1	G	1	1	1		95		1	no	T1 **(12)**	II A	yes	PP, EX; A	1	2; 31; 42
1972	METHANE, REFRIGERATED or NATURAL GAS, REFRIGERATED, with high methane content	2	3F		2.1	G	2	4	1; 3		95		1	no	T1 **(12)**	II A	yes	PP, EX; A	1	2; 31; 42
1978	PROPANE	2	2F		2.1	G	1	1			91		1	no	T1 **(12)**	II A	yes	PP, EX, A	1	2; 31
1978	PROPANE, REFRIGERATED	2	3F		2.1	G	2	4	1; 3		95		1	no	T1 **(12)**	II A	yes	PP, EX; A	1	2; 31
1986	ALCOHOLS, FLAMMABLE, TOXIC, N.O.S. Initial boiling point ≤ 60°C	3	FT1	I	3+6.1+(N1, N2, N3, CMR, F or S)	C	1	1			95		1	no	T4 **(3)**	II B **(4)**	yes	PP, EP, EX, TOX, A	2	22; 27
1986	ALCOHOLS, FLAMMABLE, TOXIC, N.O.S. 60°C <Initial boiling point ≤ 85°C	3	FT1	II	3+6.1+(N1, N2, N3, CMR, F or S)	C	2	2	3	50	95		2	no	T4 **(3)**	II B **(4)**	yes	PP, EP, EX, TOX, A	2	22; 23; 27
1986	ALCOHOLS, FLAMMABLE, TOXIC, N.O.S. 85°C <Initial boiling point ≤ 115°C	3	FT1	II	3+6.1+(N1, N2, N3, CMR, F or S)	C	2	2		50	95		2	no	T4 **(3)**	II B **(4)**	yes	PP, EP, EX, TOX, A	2	22; 27
1986	ALCOHOLS, FLAMMABLE, TOXIC, N.O.S. 115°C < Initial boiling point	3	FT1	II	3+6.1+(N1, N2, N3, CMR, F or S)	C	2	2		35	95		2	no	T4 **(3)**	II B **(4)**	yes	PP, EP, EX, TOX, A	2	22; 27
1986	ALCOHOLS, FLAMMABLE, TOXIC, N.O.S. 60°C < Initial boiling point ≤ 85°C	3	FT1	III	3+6.1+(N1, N2, N3, CMR, F or S)	C	2	2	3	50	95		2	no	T4 **(3)**	II B **(4)**	yes	PP, EP, EX, TOX, A	0	22; 23; 27

UN No. or substance identification No.	Name and description	Class	Classification code	Packing group	Danger labels	Type of tank vessel	Cargo tank design	Cargo tank type	Cargo tank equipment	Opening pressure of the pressure relief valve / high-velocity vent valve in kPa	Maximum degree of filling in %	Relative density at 20°C	Type of sampling device	Pump-room below deck permitted	Temperature class	Explosion group	Anti-explosion protection required	Equipment required	Number of cones/blue lights	Additional requirements / Remarks
(1)	(2)	3(a)	3(b)	(4)	(5)	(6)	(7)	(8)	(9)	(10)	(11)	(12)	(13)	(14)	(15)	(16)	(17)	(18)	(19)	(20)
1986	ALCOHOLS, FLAMMABLE, TOXIC, N.O.S. 85°C < Initial boiling point ≤ 115°C	3	FT1	III	3+6.1+(N1, N2, N3, CMR, F or S)	C	2	2		50	95		2	no	T4 **(3)**	II B **(4)**	yes	PP, EP, EX, TOX, A	0	22; 27
1986	ALCOHOLS, FLAMMABLE, TOXIC, N.O.S. 115°C < Initial boiling point	3	FT1	III	3+6.1+(N1, N2, N3, CMR, F or S)	C	2	2		35	95		2	no	T4 **(3)**	II B **(4)**	yes	PP, EP, EX, TOX, A	0	22; 27
1986	ALCOHOLS, FLAMMABLE, TOXIC, N.O.S. Initial boiling point ≤ 60°C	3	FT1	I	3+6.1+(N1, N2, N3, CMR, F or S)	C	1	1			95		1	no	T4 **(3)**	II B **(4)** (II B3)	yes	PP, EP, EX, TOX, A	2	22; 27; 44
1986	ALCOHOLS, FLAMMABLE, TOXIC, N.O.S. 60°C <Initial boiling point ≤ 85°C	3	FT1	II	3+6.1+(N1, N2, N3, CMR, F or S)	C	2	2	3	50	95		2	no	T4 **(3)**	II B **(4)** (II B3)	yes	PP, EP, EX, TOX, A	2	22; 23; 27; 44
1986	ALCOHOLS, FLAMMABLE, TOXIC, N.O.S. 85°C <Initial boiling point ≤ 115°C	3	FT1	II	3+6.1+(N1, N2, N3, CMR, F or S)	C	2	2		50	95		2	no	T4 **(3)**	II B **(4)** (II B3)	yes	PP, EP, EX, TOX, A	2	22; 27; 44
1986	ALCOHOLS, FLAMMABLE, TOXIC, N.O.S. 115°C < Initial boiling point	3	FT1	II	3+6.1+(N1, N2, N3, CMR, F or S)	C	2	2		35	95		2	no	T4 **(3)**	II B **(4)** (II B3)	yes	PP, EP, EX, TOX, A	2	22; 27; 44
1986	ALCOHOLS, FLAMMABLE, TOXIC, N.O.S. 60°C < Initial boiling point ≤ 85°C	3	FT1	III	3+6.1+(N1, N2, N3, CMR, F or S)	C	2	2	3	50	95		2	no	T4 **(3)**	II B **(4)** (II B3)	yes	PP, EP, EX, TOX, A	0	22; 23; 27; 44
1986	ALCOHOLS, FLAMMABLE, TOXIC, N.O.S. 85°C < Initial boiling point ≤ 115°C	3	FT1	III	3+6.1+(N1, N2, N3, CMR, F or S)	C	2	2		50	95		2	no	T4 **(3)**	II B **(4)** (II B3)	yes	PP, EP, EX, TOX, A	0	22; 27; 44
1986	ALCOHOLS, FLAMMABLE, TOXIC, N.O.S. 115°C < Initial boiling point	3	FT1	III	3+6.1+(N1, N2, N3, CMR, F or S)	C	2	2		35	95		2	no	T4 **(3)**	II B **(4)** (II B3)	yes	PP, EP, EX, TOX, A	0	22; 27; 44

UN No. or substance identification No.	Name and description	Class	Classification code	Packing group	Danger labels	Type of tank vessel	Cargo tank design	Cargo tank type	Cargo tank equipment	Opening pressure of the pressure relief valve / high-velocity vent valve in kPa	Maximum degree of filling in %	Relative density at 20°C	Type of sampling device	Pump-room below deck permitted	Temperature class	Explosion group	Anti-explosion protection required	Equipment required	Number of cones/blue lights	Additional requirements / Remarks
(1)	(2)	3(a)	3(b)	(4)	(5)	(6)	(7)	(8)	(9)	(10)	(11)	(12)	(13)	(14)	(15)	(16)	(17)	(18)	(19)	(20)
1987	ALCOHOLS, N.O.S. (tert-BUTANOL 90% (MASS)/METHANOL 10% (MASS) MIXTURE)	3	F1	II	3	N	2	2		10	97		3	yes	T1 **(12)**	II A	yes	PP, EX, A	1	
1987	ALCOHOLS, N.O.S. (CYCLOHEXANOL)	3	F1	III	3+N3+F	N	3	3	2		95	0.95	3	yes	T3	II A	yes	PP, EX, A	0	7; 17
1987	ALCOHOLS, N.O.S. (CYCLOHEXANOL)	3	F1	III	3+N3+F	N	3	3	4		95	0.95	3	yes			no	PP	0	7; 17; 20:+46°C
1987	ALCOHOLS, N.O.S. Flash point < 23°C with 175kPa≤vp50<300kPa	3	F1	II	3+(N1, N2, N3, CMR, F or S)	N	1	1			95		1	yes	T4 **(3)**	II B **(4)**	yes	PP, EX, A	1	14; 22; 27
1987	ALCOHOLS, N.O.S. Flash point < 23°C with 175kPa≤vp50<300kPa	3	F1	II	3+(N1, N2, N3, CMR, F or S)	N	2	2	1	50	95		3	yes	T4 **(3)**	II B **(4)**	yes	PP, EX, A	1	14; 22; 27
1987	ALCOHOLS, N.O.S. Flash point < 23°C with 110kPa≤vp50<175kPa	3	F1	II	3+(N1, N2, N3, CMR, F or S)	N	2	2		50	97		3	yes	T4 **(3)**	II B **(4)**	yes	PP, EX, A	1	14; 22; 27
1987	ALCOHOLS, N.O.S. Flash point < 23°C with 110kPa≤vp50<150kPa	3	F1	II	3+(N1, N2, N3, CMR, F or S)	N	2	2	3	10	97		3	yes	T4 **(3)**	II B **(4)**	yes	PP, EX, A	1	14; 22; 27
1987	ALCOHOLS, N.O.S. Flash point < 23°C with vp50<110kPa	3	F1	II	3+(N1, N2, N3, CMR, F or S)	N	2	2		10	97		3	yes	T4 **(3)**	II B **(4)**	yes	PP, EX, A	1	14; 22; 27
1987	ALCOHOLS, N.O.S. Flash point ≥ 23°C but ≤60°C	3	F1	III	3+(N1, N2, N3, CMR, F or S)	N	3	2			97		3	yes	T4 **(3)**	II B **(4)**	yes	PP, EX, A	0	14; 22; 27
1987	ALCOHOLS, N.O.S. Flash point < 23°C with 175kPa≤vp50<300kPa	3	F1	II	3+(N1, N2, N3, CMR, F or S)	N	1	1			95		1	yes	T4 **(3)**	II B **(4)** (II B3)	yes	PP, EX, A	1	14; 22; 27; 44
1987	ALCOHOLS, N.O.S. Flash point < 23°C with 175kPa≤vp50<300kPa	3	F1	II	3+(N1, N2, N3, CMR, F or S)	N	2	2	1	50	95		3	yes	T4 **(3)**	II B **(4)** (II B3)	yes	PP, EX, A	1	14; 22; 27; 44
1987	ALCOHOLS, N.O.S. Flash point < 23°C with 110kPa≤vp50<175kPa	3	F1	II	3+(N1, N2, N3, CMR, F or S)	N	2	2		50	97		3	yes	T4 **(3)**	II B **(4)** (II B3)	yes	PP, EX, A	1	14; 22; 27; 44

UN No. or substance identification No.	Name and description	Class	Classification code	Packing group	Danger labels	Type of tank vessel	Cargo tank design	Cargo tank type	Cargo tank equipment	Opening pressure of the pressure relief valve / high-velocity vent valve in kPa	Maximum degree of filling in %	Relative density at 20°C	Type of sampling device	Pump-room below deck permitted	Temperature class	Explosion group	Anti-explosion protection required	Equipment required	Number of cones/blue lights	Additional requirements / Remarks
(1)	(2)	3(a)	3(b)	(4)	(5)	(6)	(7)	(8)	(9)	(10)	(11)	(12)	(13)	(14)	(15)	(16)	(17)	(18)	(19)	(20)
1987	ALCOHOLS, N.O.S. Flash point < 23°C with 110kPa≤vp50<150kPa	3	F1	II	3+(N1, N2, N3, CMR, F or S)	N	2	2	3	10	97		3	yes	T4 **(3)**	II B **(4)** (II B3)	yes	PP, EX, A	1	14; 22; 27; 44
1987	ALCOHOLS, N.O.S. Flash point < 23°C with vp50<110kPa	3	F1	II	3+(N1, N2, N3, CMR, F or S)	N	2	2		10	97		3	yes	T4 **(3)**	II B **(4)** (II B3)	yes	PP, EX, A	1	14; 22; 27; 44
1987	ALCOHOLS, N.O.S. Flash point ≥ 23°C but ≤60°C	3	F1	III	3+(N1, N2, N3, CMR, F or S)	N	3	2			97		3	yes	T4 **(3)**	II B **(4)** (II B3)	yes	PP, EX, A	0	14; 22; 27; 44
1989	ALDEHYDES, N.O.S. Flash point < 23°C with 175kPa≤vp50<300kPa	3	F1	II	3+(N1, N2, N3, CMR, F or S)	N	1	1			95		1	yes	T4 **(3)**	II B **(4)**	yes	PP, EX, A	1	14; 22; 27
1989	ALDEHYDES, N.O.S. Flash point < 23°C with 175kPa≤vp50<300kPa	3	F1	II	3+(N1, N2, N3, CMR, F or S)	N	2	2	1	50	95		3	yes	T4 **(3)**	II B **(4)**	yes	PP, EX, A	1	14; 22; 27
1989	ALDEHYDES, N.O.S. Flash point < 23°C with 110kPa≤vp50<175kPa	3	F1	II	3+(N1, N2, N3, CMR, F or S)	N	2	2		50	97		3	yes	T4 **(3)**	II B **(4)**	yes	PP, EX, A	1	14; 22; 27
1989	ALDEHYDES, N.O.S. Flash point < 23°C with 110kPa≤vp50<150kPa	3	F1	II	3+(N1, N2, N3, CMR, F or S)	N	2	2	3	10	97		3	yes	T4 **(3)**	II B **(4)**	yes	PP, EX, A	1	14; 22; 27
1989	ALDEHYDES, N.O.S. Flash point < 23°C with vp50<110kPa	3	F1	II	3+(N1, N2, N3, CMR, F or S)	N	2	2		10	97		3	yes	T4 **(3)**	II B **(4)**	yes	PP, EX, A	1	14; 22; 27
1989	ALDEHYDES, N.O.S. Flash point ≥ 23°C but ≤60°C	3	F1	III	3+(N1, N2, N3, CMR, F or S)	N	3	2			97		3	yes	T4 **(3)**	II B **(4)**	yes	PP, EX, A	0	14; 22; 27
1989	ALDEHYDES, N.O.S. Flash point < 23°C with 175kPa≤vp50<300kPa	3	F1	II	3+(N1, N2, N3, CMR, F or S)	N	1	1			95		1	yes	T4 **(3)**	II B **(4)** (II B3)	yes	PP, EX, A	1	14; 22; 27; 44

UN No. or substance identification No.	Name and description	Class	Classification code	Packing group	Danger labels	Type of tank vessel	Cargo tank design	Cargo tank type	Cargo tank equipment	Opening pressure of the pressure relief valve / high-velocity vent valve in kPa	Maximum degree of filling in %	Relative density at 20°C	Type of sampling device	Pump-room below deck permitted	Temperature class	Explosion group	Anti-explosion protection required	Equipment required	Number of cones/blue lights	Additional requirements / Remarks
(1)	(2)	3(a)	3(b)	(4)	(5)	(6)	(7)	(8)	(9)	(10)	(11)	(12)	(13)	(14)	(15)	(16)	(17)	(18)	(19)	(20)
1989	ALDEHYDES, N.O.S. Flash point < 23°C with 175kPa≤vp50<300kPa	3	F1	II	3+(N1, N2, N3, CMR, F or S)	N	2	2	1	50	95		3	yes	T4 **(3)**	II B **(4)** (II B3)	yes	PP, EX, A	1	14; 22; 27; 44
1989	ALDEHYDES, N.O.S. Flash point < 23°C with 110kPa≤vp50<175kPa	3	F1	II	3+(N1, N2, N3, CMR, F or S)	N	2	2		50	97		3	yes	T4 **(3)**	II B **(4)** (II B3)	yes	PP, EX, A	1	14; 22; 27; 44
1989	ALDEHYDES, N.O.S. Flash point < 23°C with 110kPa≤vp50<150kPa	3	F1	II	3+(N1, N2, N3, CMR, F or S)	N	2	2	3	10	97		3	yes	T4 **(3)**	II B **(4)** (II B3)	yes	PP, EX, A	1	14; 22; 27; 44
1989	ALDEHYDES, N.O.S. Flash point < 23°C with vp50<110kPa	3	F1	II	3+(N1, N2, N3, CMR, F or S)	N	2	2		10	97		3	yes	T4 **(3)**	II B **(4)** (II B3)	yes	PP, EX, A	1	14; 22; 27; 44
1989	ALDEHYDES, N.O.S. Flash point ≥ 23°C but ≤60°C	3	F1	III	3+(N1, N2, N3, CMR, F or S)	N	3	2			97		3	yes	T4 **(3)**	II B **(4)** (II B3)	yes	PP, EX, A	0	14; 22; 27; 44
1991	CHLOROPRENE, STABILIZED	3	FT1	I	3+6.1+unst.+CMR	C	2	2	3	50	95	0.96	1	no	T2 **(12)**	II B (II B3)	yes	PP, EP, EX, TOX, A	2	3; 5; 23
1992	FLAMMABLE LIQUID, TOXIC, N.O.S Initial boiling point ≤ 60°C	3	FT1	I	3+6.1+(N1, N2, N3, CMR, F or S)	C	1	1			95		1	no	T4 **(3)**	II B **(4)**	yes	PP, EP, EX, TOX, A	2	22; 27
1992	FLAMMABLE LIQUID, TOXIC, N.O.S 60°C <Initial boiling point ≤ 85°C	3	FT1	II	3+6.1+(N1, N2, N3, CMR, F or S)	C	2	2	3	50	95		2	no	T4 **(3)**	II B **(4)**	yes	PP, EP, EX, TOX, A	2	22; 23; 27
1992	FLAMMABLE LIQUID, TOXIC, N.O.S 85°C <Initial boiling point ≤ 115°C	3	FT1	II	3+6.1+(N1, N2, N3, CMR, F or S)	C	2	2		50	95		2	no	T4 **(3)**	II B **(4)**	yes	PP, EP, EX, TOX, A	2	22; 27
1992	FLAMMABLE LIQUID, TOXIC, N.O.S 115°C <Initial boiling point	3	FT1	II	3+6.1+(N1, N2, N3, CMR, F or S)	C	2	2		35	95		2	no	T4 **(3)**	II B **(4)**	yes	PP, EP, EX, TOX, A	2	22; 27

UN No. or substance identification No.	Name and description	Class	Classification code	Packing group	Danger labels	Type of tank vessel	Cargo tank design	Cargo tank type	Cargo tank equipment	Opening pressure of the pressure relief valve / high-velocity vent valve in kPa	Maximum degree of filling in %	Relative density at 20°C	Type of sampling device	Pump-room below deck permitted	Temperature class	Explosion group	Anti-explosion protection required	Equipment required	Number of cones/blue lights	Additional requirements / Remarks
(1)	(2)	3(a)	3(b)	(4)	(5)	(6)	(7)	(8)	(9)	(10)	(11)	(12)	(13)	(14)	(15)	(16)	(17)	(18)	(19)	(20)
1992	FLAMMABLE LIQUID, TOXIC, N.O.S 60°C <Initial boiling point ≤ 85°C	3	FT1	III	3+6.1+(N1, N2, N3, CMR, F or S)	C	2	2	3	50	95		2	no	T4 **(3)**	II B **(4)**	yes	PP, EP, EX, TOX, A	0	22; 23; 27
1992	FLAMMABLE LIQUID, TOXIC, N.O.S 85°C <Initial boiling point ≤ 115°C	3	FT1	III	3+6.1+(N1, N2, N3, CMR, F or S)	C	2	2		50	95		2	no	T4 **(3)**	II B **(4)**	yes	PP, EP, EX, TOX, A	0	22; 27
1992	FLAMMABLE LIQUID, TOXIC, N.O.S 115°C <Initial boiling point	3	FT1	III	3+6.1+(N1, N2, N3, CMR, F or S)	C	2	2		35	95		2	no	T4 **(3)**	II B **(4)**	yes	PP, EP, EX, TOX, A	0	22; 27
1992	FLAMMABLE LIQUID, TOXIC, N.O.S Initial boiling point ≤ 60°C	3	FT1	I	3+6.1+(N1, N2, N3, CMR, F or S)	C	1	1			95		1	no	T4 **(3)**	II B **(4)** (II B3)	yes	PP, EP, EX, TOX, A	2	22; 27; 44
1992	FLAMMABLE LIQUID, TOXIC, N.O.S 60°C <Initial boiling point ≤ 85°C	3	FT1	II	3+6.1+(N1, N2, N3, CMR, F or S)	C	2	2	3	50	95		2	no	T4 **(3)**	II B **(4)** (II B3)	yes	PP, EP, EX, TOX, A	2	22; 23; 27; 44
1992	FLAMMABLE LIQUID, TOXIC, N.O.S 85°C <Initial boiling point ≤ 115°C	3	FT1	II	3+6.1+(N1, N2, N3, CMR, F or S)	C	2	2		50	95		2	no	T4 **(3)**	II B **(4)** (II B3)	yes	PP, EP, EX, TOX, A	2	22; 27; 44
1992	FLAMMABLE LIQUID, TOXIC, N.O.S 115°C <Initial boiling point	3	FT1	II	3+6.1+(N1, N2, N3, CMR, F or S)	C	2	2		35	95		2	no	T4 **(3)**	II B **(4)** (II B3)	yes	PP, EP, EX, TOX, A	2	22; 27; 44
1992	FLAMMABLE LIQUID, TOXIC, N.O.S 60°C <Initial boiling point ≤ 85°C	3	FT1	III	3+6.1+(N1, N2, N3, CMR, F or S)	C	2	2	3	50	95		2	no	T4 **(3)**	II B **(4)** (II B3)	yes	PP, EP, EX, TOX, A	0	22; 23; 27; 44
1992	FLAMMABLE LIQUID, TOXIC, N.O.S 85°C <Initial boiling point ≤ 115°C	3	FT1	III	3+6.1+(N1, N2, N3, CMR, F or S)	C	2	2		50	95		2	no	T4 **(3)**	II B **(4)** (II B3)	yes	PP, EP, EX, TOX, A	0	22; 27; 44

UN No. or substance identification No.	Name and description	Class	Classification code	Packing group	Danger labels	Type of tank vessel	Cargo tank design	Cargo tank type	Cargo tank equipment	Opening pressure of the pressure relief valve / high-velocity vent valve in kPa	Maximum degree of filling in %	Relative density at 20°C	Type of sampling device	Pump-room below deck permitted	Temperature class	Explosion group	Anti-explosion protection required	Equipment required	Number of cones/blue lights	Additional requirements / Remarks
(1)	(2)	3(a)	3(b)	(4)	(5)	(6)	(7)	(8)	(9)	(10)	(11)	(12)	(13)	(14)	(15)	(16)	(17)	(18)	(19)	(20)
1992	FLAMMABLE LIQUID, TOXIC, N.O.S 115°C <Initial boiling point	3	FT1	III	3+6.1+(N1, N2, N3, CMR, F or S)	C	2	2		35	95		2	no	T4 **(3)**	II B **(4)** (II B3)	yes	PP, EP, EX, TOX, A	0	22; 27; 44
1993	FLAMMABLE LIQUID, N.O.S. WITH MORE THAN 10% BENZENE INITIAL BOILING POINT ≤ 60°C	3	F1	I	3+(N1, N2, N3, CMR, F)	C	1	1			95		1	yes	T4 **(3)**	II B **(4)**	yes	PP, EP, EX, TOX, A	1	27
1993	FLAMMABLE LIQUID, N.O.S. WITH MORE THAN 10% BENZENE INITIAL BOILING POINT ≤ 60°C	3	F1	II	3+(N1, N2, N3, CMR, F)	C	1	1			95		1	yes	T4 **(3)**	II B **(4)**	yes	PP, EP, EX, TOX, A	1	27
1993	FLAMMABLE LIQUID, N.O.S. WITH MORE THAN 10% BENZENE 60°C < INITIAL BOILING POINT ≤ 85°C	3	F1	II	3+(N1, N2, N3, CMR, F)	C	2	2	3	50	95		2	yes	T4 **(3)**	II B **(4)**	yes	PP, EP, EX, TOX, A	1	23; 27
1993	FLAMMABLE LIQUID, N.O.S. WITH MORE THAN 10% BENZENE 85°C < INITIAL BOILING POINT ≤ 115°C	3	F1	II	3+(N1, N2, N3 CMR, F)	C	2	2		50	95		2	yes	T4 **(3)**	II B **(4)**	yes	PP, EP, EX, TOX, A	1	27
1993	FLAMMABLE LIQUID, N.O.S. WITH MORE THAN 10% BENZENE INITIAL BOILING POINT > 115°C	3	F1	II	3+(N1, N2, N3 CMR, F)	C	2	2		35	95		2	yes	T4 **(3)**	II B **(4)**	yes	PP, EP, EX, TOX, A	1	27
1993	FLAMMABLE LIQUID, N.O.S. WITH MORE THAN 10% BENZENE 60°C < INITIAL BOILING POINT ≤ 85°C	3	F1	III	3+(N1, N2, N3 CMR, F)	C	2	2	3	50	95		2	yes	T4 **(3)**	II B **(4)**	yes	PP, EP, EX, TOX, A	0	23; 27
1993	FLAMMABLE LIQUID, N.O.S. WITH MORE THAN 10% BENZENE 85°C < INITIAL BOILING POINT ≤ 115°C	3	F1	III	3+(N1, N2, N3 CMR, F)	C	2	2		50	95		2	yes	T4 **(3)**	II B **(4)**	yes	PP, EP, EX, TOX, A	0	27
1993	FLAMMABLE LIQUID, N.O.S. WITH MORE THAN 10% BENZENE INITIAL INITIAL BOILING POINT > 115°C	3	F1	III	3+(N1, N2, N3 CMR, F)	C	2	2		35	95		2	yes	T4 **(3)**	II B **(4)**	yes	PP, EP, EX, TOX, A	0	27

UN No. or substance identification No.	Name and description	Class	Classification code	Packing group	Danger labels	Type of tank vessel	Cargo tank design	Cargo tank type	Cargo tank equipment	Opening pressure of the pressure relief valve / high-velocity vent valve in kPa	Maximum degree of filling in %	Relative density at 20°C	Type of sampling device	Pump-room below deck permitted	Temperature class	Explosion group	Anti-explosion protection required	Equipment required	Number of cones/blue lights	Additional requirements / Remarks
(1)	(2)	3(a)	3(b)	(4)	(5)	(6)	(7)	(8)	(9)	(10)	(11)	(12)	(13)	(14)	(15)	(16)	(17)	(18)	(19)	(20)
1993	FLAMMABLE LIQUID, N.O.S. (CYCLO-HEXANONE/ CYCLOHEXANOL MIX-TURE)	3	F1	III	3+F	N	3	3			97	0.95	3	yes	T3	II A	yes	PP, EX, A	0	
1993	FLAMMABLE LIQUID, N.O.S. Flash point < 23°C with 175kPa≤vp50<300kPa	3	F1	I	3+(N1, N2, N3, CMR, F or S)	N	1	1			95		1	yes	T4 **(3)**	II B **(4)**	yes	PP, EX, A	1	14; 22; 27
1993	FLAMMABLE LIQUID, N.O.S. Flash point < 23°C with 175kPa≤vp50<300kPa	3	F1	I	3+(N1, N2, N3, CMR, F or S)	N	2	2	1	50	95		3	yes	T4 **(3)**	II B **(4)**	yes	PP, EX, A	1	14; 22; 27
1993	FLAMMABLE LIQUID, N.O.S. Flash point < 23°C with 110kPa≤vp50<175kPa	3	F1	I	3+(N1, N2, N3, CMR, F or S)	N	2	2		50	97		3	yes	T4 **(3)**	II B **(4)**	yes	PP, EX, A	1	14; 22; 27
1993	FLAMMABLE LIQUID, N.O.S. Flash point < 23°C with 110kPa≤vp50<150kPa	3	F1	I	3+(N1, N2, N3, CMR, F or S)	N	2	2	3	10	97		3	yes	T4 **(3)**	II B **(4)**	yes	PP, EX, A	1	14; 22; 27
1993	FLAMMABLE LIQUID, N.O.S. Flash point < 23°C with vp50<110kPa	3	F1	I	3+(N1, N2, N3, CMR, F or S)	N	2	2		10	97		3	yes	T4 **(3)**	II B **(4)**	yes	PP, EX, A	1	14; 22; 27
1993	FLAMMABLE LIQUID, N.O.S. Flash point < 23°C with 175kPa≤vp50<300kPa	3	F1	II	3+(N1, N2, N3, CMR, F or S)	N	1	1			95		1	yes	T4 **(3)**	II B **(4)**	yes	PP, EX, A	1	14; 22; 27
1993	FLAMMABLE LIQUID, N.O.S. Flash point < 23°C with 175kPa≤vp50<300kPa	3	F1	II	3+(N1, N2, N3, CMR, F or S)	N	2	2	1	50	95		3	yes	T4 **(3)**	II B **(4)**	yes	PP, EX, A	1	14; 22; 27
1993	FLAMMABLE LIQUID, N.O.S. Flash point < 23°C with 110kPa≤vp50<175kPa	3	F1	II	3+(N1, N2, N3, CMR, F or S)	N	2	2		50	97		3	yes	T4 **(3)**	II B **(4)**	yes	PP, EX, A	1	14; 22; 27
1993	FLAMMABLE LIQUID, N.O.S. Flash point < 23°C with 110kPa≤vp50<150kPa	3	F1	II	3+(N1, N2, N3, CMR, F or S)	N	2	2	3	10	97		3	yes	T4 **(3)**	II B **(4)**	yes	PP, EX, A	1	14; 22;27
1993	FLAMMABLE LIQUID, N.O.S. Flash point < 23°C with vp50<110kPa	3	F1	II	3+(N1, N2, N3, CMR, F or S)	N	2	2		10	97		3	yes	T4 **(3)**	II B **(4)**	yes	PP, EX, A	1	14; 22; 27
1993	FLAMMABLE LIQUID, N.O.S. Flash point ≥ 23°C but ≤60°C	3	F1	III	3+(N1, N2, N3, CMR, F or S)	N	3	2			97		3	yes	T4 **(3)**	II B **(4)**	yes	PP, EX, A	1	14; 22; 27

UN No. or substance identification No.	Name and description	Class	Classification code	Packing group	Danger labels	Type of tank vessel	Cargo tank design	Cargo tank type	Cargo tank equipment	Opening pressure of the pressure relief valve / high-velocity vent valve in kPa	Maximum degree of filling in %	Relative density at 20°C	Type of sampling device	Pump-room below deck permitted	Temperature class	Explosion group	Anti-explosion protection required	Equipment required	Number of cones/blue lights	Additional requirements / Remarks
(1)	(2)	3(a)	3(b)	(4)	(5)	(6)	(7)	(8)	(9)	(10)	(11)	(12)	(13)	(14)	(15)	(16)	(17)	(18)	(19)	(20)
1993	FLAMMABLE LIQUID, N.O.S. WITH MORE THAN 10% BENZENE INITIAL BOILING POINT ≤ 60°C	3	F1	I	3+(N1, N2, N3, CMR, F)	C	1	1			95		1	yes	T4 **(3)**	II B **(4)** (II B3)	yes	PP, EP, EX, TOX, A	1	27; 44
1993	FLAMMABLE LIQUID, N.O.S. WITH MORE THAN 10% BENZENE INITIAL BOILING POINT ≤ 60°C	3	F1	II	3+(N1, N2, N3, CMR, F)	C	1	1			95		1	yes	T4 **(3)**	II B **(4)** (II B3)	yes	PP, EP, EX, TOX, A	1	27; 44
1993	FLAMMABLE LIQUID, N.O.S. WITH MORE THAN 10% BENZENE 60°C < INITIAL BOILING POINT ≤ 85°C	3	F1	II	3+(N1, N2, N3, CMR, F)	C	2	2	3	50	95		2	yes	T4 **(3)**	II B **(4)** (II B3)	yes	PP, EP, EX, TOX, A	1	23; 27; 44
1993	FLAMMABLE LIQUID, N.O.S. WITH MORE THAN 10% BENZENE 85°C < INITIAL BOILING POINT ≤ 115°C	3	F1	II	3+(N1, N2, N3 CMR, F)	C	2	2		50	95		2	yes	T4 **(3)**	II B **(4)** (II B3)	yes	PP, EP, EX, TOX, A	1	27; 44
1993	FLAMMABLE LIQUID, N.O.S. WITH MORE THAN 10% BENZENE INITIAL BOILING POINT > 115°C	3	F1	II	3+(N1, N2, N3 CMR, F)	C	2	2		35	95		2	yes	T4 **(3)**	II B **(4)** (II B3)	yes	PP, EP, EX, TOX, A	1	27; 44
1993	FLAMMABLE LIQUID, N.O.S. WITH MORE THAN 10% BENZENE 60°C < INITIAL BOILING POINT ≤ 85°C	3	F1	III	3+(N1, N2, N3 CMR, F)	C	2	2	3	50	95		2	yes	T4 **(3)**	II B **(4)** (II B3)	yes	PP, EP, EX, TOX, A	0	23; 27; 44
1993	FLAMMABLE LIQUID, N.O.S. WITH MORE THAN 10% BENZENE 85°C < INITIAL BOILING POINT ≤ 115°C	3	F1	III	3+(N1, N2, N3 CMR, F)	C	2	2		50	95		2	yes	T4 **(3)**	II B **(4)** (II B3)	yes	PP, EP, EX, TOX, A	0	27; 44
1993	FLAMMABLE LIQUID, N.O.S. WITH MORE THAN 10% BENZENE INITIAL INITIAL BOILING POINT > 115°C	3	F1	III	3+(N1, N2, N3 CMR, F)	C	2	2		35	95		2	yes	T4 **(3)**	II B **(4)** (II B3)	yes	PP, EP, EX, TOX, A	0	27; 44

UN No. or substance identification No.	Name and description	Class	Classification code	Packing group	Danger labels	Type of tank vessel	Cargo tank design	Cargo tank type	Cargo tank equipment	Opening pressure of the pressure relief valve / high-velocity vent valve in kPa	Maximum degree of filling in %	Relative density at 20°C	Type of sampling device	Pump-room below deck permitted	Temperature class	Explosion group	Anti-explosion protection required	Equipment required	Number of cones/blue lights	Additional requirements / Remarks
(1)	(2)	3(a)	3(b)	(4)	(5)	(6)	(7)	(8)	(9)	(10)	(11)	(12)	(13)	(14)	(15)	(16)	(17)	(18)	(19)	(20)
1993	FLAMMABLE LIQUID, N.O.S. Flash point < 23°C with 175kPa≤vp50<300kPa	3	F1	I	3+(N1, N2, N3, CMR, F or S)	N	1	1			95		1	yes	T4 **(3)**	II B **(4)** (II B3)	yes	PP, EX, A	1	14; 22; 27; 44
1993	FLAMMABLE LIQUID, N.O.S. Flash point < 23°C with 175kPa≤vp50<300kPa	3	F1	I	3+(N1, N2, N3, CMR, F or S)	N	2	2	1	50	95		3	yes	T4 **(3)**	II B **(4)** (II B3)	yes	PP, EX, A	1	14; 22; 27; 44
1993	FLAMMABLE LIQUID, N.O.S. Flash point < 23°C with 110kPa≤vp50<175kPa	3	F1	I	3+(N1, N2, N3, CMR, F or S)	N	2	2		50	97		3	yes	T4 **(3)**	II B **(4)** (II B3)	yes	PP, EX, A	1	14; 22; 27; 44
1993	FLAMMABLE LIQUID, N.O.S. Flash point < 23°C with 110kPa≤vp50<150kPa	3	F1	I	3+(N1, N2, N3, CMR, F or S)	N	2	2	3	10	97		3	yes	T4 **(3)**	II B **(4)** (II B3)	yes	PP, EX, A	1	14; 22; 27; 44
1993	FLAMMABLE LIQUID, N.O.S. Flash point < 23°C with vp50<110kPa	3	F1	I	3+(N1, N2, N3, CMR, F or S)	N	2	2		10	97		3	yes	T4 **(3)**	II B **(4)** (II B3)	yes	PP, EX, A	1	14; 22; 27; 44
1993	FLAMMABLE LIQUID, N.O.S. Flash point < 23°C with 175kPa≤vp50<300kPa	3	F1	II	3+(N1, N2, N3, CMR, F or S)	N	1	1			95		1	yes	T4 **(3)**	II B **(4)** (II B3)	yes	PP, EX, A	1	14; 22; 27; 44
1993	FLAMMABLE LIQUID, N.O.S. Flash point < 23°C with 175kPa≤vp50<300kPa	3	F1	II	3+(N1, N2, N3, CMR, F or S)	N	2	2	1	50	95		3	yes	T4 **(3)**	II B **(4)** (II B3)	yes	PP, EX, A	1	14; 22; 27; 44
1993	FLAMMABLE LIQUID, N.O.S. Flash point < 23°C with 110kPa≤vp50<175kPa	3	F1	II	3+(N1, N2, N3, CMR, F or S)	N	2	2		50	97		3	yes	T4 **(3)**	II B **(4)** (II B3)	yes	PP, EX, A	1	14; 22; 27; 44

UN No. or substance identification No.	Name and description	Class	Classification code	Packing group	Danger labels	Type of tank vessel	Cargo tank design	Cargo tank type	Cargo tank equipment	Opening pressure of the pressure relief valve / high-velocity vent valve in kPa	Maximum degree of filling in %	Relative density at 20°C	Type of sampling device	Pump-room below deck permitted	Temperature class	Explosion group	Anti-explosion protection required	Equipment required	Number of cones/blue lights	Additional requirements / Remarks
(1)	(2)	3(a)	3(b)	(4)	(5)	(6)	(7)	(8)	(9)	(10)	(11)	(12)	(13)	(14)	(15)	(16)	(17)	(18)	(19)	(20)
1993	FLAMMABLE LIQUID, N.O.S. Flash point < 23°C with 110kPa≤vp50<150kPa	3	F1	II	3+(N1, N2, N3, CMR, F or S)	N	2	2	3	10	97		3	yes	T4 **(3)**	II B **(4)** (II B3)	yes	PP, EX, A	1	14; 22;27; 44
1993	FLAMMABLE LIQUID, N.O.S. Flash point < 23°C with vp50<110kPa	3	F1	II	3+(N1, N2, N3, CMR, F or S)	N	2	2		10	97		3	yes	T4 **(3)**	II B **(4)** (II B3)	yes	PP, EX, A	1	14; 22; 27; 44
1993	FLAMMABLE LIQUID, N.O.S. Flash point ≥ 23°C but ≤60°C	3	F1	III	3+(N1, N2, N3, CMR, F or S)	N	3	2			97		3	yes	T4 **(3)**	II B **(4)** (II B3)	yes	PP, EX, A	1	14; 22; 27; 44
1999	TARS, LIQUID, including road oils, and cutback bitumens	3	F1	III	3+S	N	4	3	2		97		3	yes	T3	II A **(6)**	yes	PP, EX, A	0	
2014	HYDROGEN PEROXIDE, AQUEOUS SOLUTION with not less than 20% but not more than 60% hydrogen peroxide (stabilized as necessary)	5.1	OC 1	II	5.1+8+unst.	C	2	2		35	95	1.2	2	yes			no	PP, EP	0	3; 33
2021	CHLOROPHENOLS, LIQUID (2-CHLO-ROPHENOL)	6.1	T1	III	6.1+N2	C	2	2		25	95	1.23	2	no	T1 **(12)**	II A **(6)**	yes	PP, EP, EX, TOX, A	0	6:+10°C; 17
2022	CRESYLIC ACID	6.1	TC1	II	6.1+8+3+S	C	2	2		25	95	1.03	2	no	T1 **(12)**	II A **(6)**	yes	PP, EP, EX, TOX, A	2	6:+16°C; 17
2023	EPICHLORHYDRINE	6.1	TF1	II	6.1+3+N3	C	2	2		35	95	1.18	2	no	T2 **(12)**	II B	yes	PP, EP, EX, TOX, A	2	5
2031	NITRIC ACID, other than red fuming, with more than 70% acid	8	CO 1	I	8+5.1+N3	N	2	3		10	97	1.41 - 1.48	3	yes			no	PP, EP	0	34
2031	NITRIC ACID, other than red fuming with at le 65% but not more than 70% acid	8	CO 1	II	8+5.1+N3	N	2	3		10	97	1.39 - 1.41	3	yes			no	PP, EP	0	34

UN No. or substance identification No.	Name and description	Class	Classification code	Packing group	Danger labels	Type of tank vessel	Cargo tank design	Cargo tank type	Cargo tank equipment	Opening pressure of the pressure relief valve / high-velocity vent valve in kPa	Maximum degree of filling in %	Relative density at 20°C	Type of sampling device	Pump-room below deck permitted	Temperature class	Explosion group	Anti-explosion protection required	Equipment required	Number of cones/blue lights	Additional requirements / Remarks
(1)	(2)	3(a)	3(b)	(4)	(5)	(6)	(7)	(8)	(9)	(10)	(11)	(12)	(13)	(14)	(15)	(16)	(17)	(18)	(19)	(20)
2031	NITRIC ACID, other than red fuming, with less than 65% acid	8	CO 1	II	8+N3	N	2	3		10	97	1.02 - 1.39	3	yes			no	PP, EP	0	34
2032	NITRIC ACID, RED FUMING	8	CO T	I	8+5.1+6.1+N3	C	2	2		50	95	1.48 - 1.51	1	no			no	PP, EP, TOX, A	2	
2045	ISOBUTYRALDEHYDE (ISOBUTYL ALDEHYDE)	3	F1	II	3+N3	C	2	2	3	50	95	0.79	2	yes	T4	II A **(6)**	yes	PP, EX, A	1	15; 23
2046	CYMENES	3	F1	III	3+N2+F	N	3	3			97	0.88	3	yes	T2 **(12)**	II A **(6)**	yes	PP, EX, A	0	
2047	DICHLOROPROPENES (2,3- DICHLO-ROPROP-1-ENE)	3	F1	II	3+N2+CMR	C	2	2		45	95	1.2	2	yes	T1 **(12)**	II A **(6)**	yes	PP, EP, EX, TOX, A	1	
2047	DICHLOROPROPENES (MIXTURES of 2,3- DICHLOROPROP-1-ENE and 1,3-DICHLOROPROPENE)	3	F1	II	3+N1+CMR	C	2	2		45	95	1.23	2	yes	T2 **(1)** **(12)**	II A **(6)**	yes	PP, EP, EX, TOX, A	1	
2047	DICHLOROPROPENES (MIXTURES of 2,3- DICHLOROPROP-1-ENE and 1,3-DICHLOROPROPENE)	3	F1	III	3+N1+CMR	C	2	2		45	95	1.23	2	yes	T2 **(1)** **(12)**	II A **(6)**	yes	PP, EP, EX, TOX, A	0	
2047	DICHLOROPROPENES (1,3-DICHLO-ROPROPENE)	3	F1	III	3+N1+CMR	C	2	2		40	95	1.23	2	yes	T2 **(1)** **(12)**	II A **(6)**	yes	PP, EP, EX, TOX, A	0	
2048	DICYCLOPENTADIENE	3	F1	III	3+N2+F	N	3	3	2		95	0.94	3	yes	T1 **(12)**	II A	yes	PP, EX, A	0	7; 17
2050	DIISOBUTYLENE, ISOMERIC COM-POUNDS	3	F1	II	3+N2+F	N	2	3		10	97	0.72	3	yes	T3 **(2)**	II A **(6)**	yes	PP, EX, A	1	
2051	2-DIMETHYLAMINO ETHANOL	8	CF1	II	8+3+N3	N	3	2			97	0.89	3	yes	T3	II A **(6)**	yes	PP, EP, EX, A	1	34

UN No. or substance identification No.	Name and description	Class	Classification code	Packing group	Danger labels	Type of tank vessel	Cargo tank design	Cargo tank type	Cargo tank equipment	Opening pressure of the pressure relief valve / high-velocity vent valve in kPa	Maximum degree of filling in %	Relative density at 20°C	Type of sampling device	Pump-room below deck permitted	Temperature class	Explosion group	Anti-explosion protection required	Equipment required	Number of cones/blue lights	Additional requirements / Remarks
(1)	(2)	3(a)	3(b)	(4)	(5)	(6)	(7)	(8)	(9)	(10)	(11)	(12)	(13)	(14)	(15)	(16)	(17)	(18)	(19)	(20)
2053	METHYL ISOBUTYL CARBINOL	3	F1	III	3	N	3	2			97	0.81	3	yes	T2 **(12)**	II A	yes	PP, EX, A	0	
2054	MORPHOLINE	8	CF1	I	8+3+N3	N	3	2			97	1	3	yes	T3	II A	yes	PP, EP, EX, A	1	34
2055	STYRENE MONOMER, STABILIZED	3	F1	III	3+unst.+N3	N	3	2			97	0.91	3	yes	T1 **(12)**	II A	yes	PP, EX, A	0	3; 5; 16
2056	TETRAHYDROFURAN	3	F1	II	3	N	2	2		10	97	0.89	3	yes	T3	II B	yes	PP, EX, A	1	
2057	TRIPROPYLÈNE	3	F1	II	3+N1	C	2	2		35	95	0.74 4	2	yes	T3	II A	yes	PP, EX, A	1	
2057	TRIPROPYLENE	3	F1	III	3+N1	C	2	2		35	95	0.73	2	yes	T3	II A	yes	PP, EX, A	0	
2078	TOLUENE DIISOCYANATE (and isomeric mixtures) (2,4- TOLUENE DIISOCYANATE)	6.1	T1	II	6.1+N2+S	C	2	2	2	25	95	1.22	2	no	T1 **(12)**	II B (II B3 **(11)**)	yes	PP, EP, EX, TOX, A	2	2; 7; 8; 17
2078	TOLUENE DIISOCYANATE (and isomeric mixtures) (2,4- TOLUENE DIISOCYANATE)	6.1	T1	II	6.1+N2+S	C	2	1	4	25	95	1.22	2	no			no	PP, EP, TOX, A	2	2; 7; 8; 17; 20:+112°C; 26
2079	DIETHYLENETRIAMINE	8	C7	II	8+N3	N	4	2			97	0.96	3	yes			no	PP, EP	0	34
2187	CARBON DIOXIDE, REFRIGERATED LIQUID	2	3A		2.2	G	1	1	1		95		1	yes			no	PP	0	31; 39
2205	ADIPONITRILE	6.1	T1	III	6.1	C	2	2		25	95	0.96	2	no	T4	II B (II B3 **(11)**)	yes	PP, EP, EX, TOX, A	0	6: 6°C; 17
2206	ISOCYANATES, TOXIC, N.O.S. (4-CHLOROPHENYL ISOCYANATE)	6.1	T1	II	6.1+S	C	2	2	4	25	95	1.25	2	no			no	PP, EP, TOX, A	2	7; 17
2209	FORMALDEHYDE SOLUTION with not less than 25% formaldehyde	8	C9	III	8+N3	N	4	2			97	1.09	3	yes			no	PP, EP	0	15; 34

UN No. or substance identification No.	Name and description	Class	Classification code	Packing group	Danger labels	Type of tank vessel	Cargo tank design	Cargo tank type	Cargo tank equipment	Opening pressure of the pressure relief valve / high-velocity vent valve in kPa	Maximum degree of filling in %	Relative density at 20°C	Type of sampling device	Pump-room below deck permitted	Temperature class	Explosion group	Anti-explosion protection required	Equipment required	Number of cones/blue lights	Additional requirements / Remarks
(1)	(2)	3(a)	3(b)	(4)	(5)	(6)	(7)	(8)	(9)	(10)	(11)	(12)	(13)	(14)	(15)	(16)	(17)	(18)	(19)	(20)
2215	MALEIC ANHYDRIDE, MOLTEN	8	C3	III	8+N3	N	3	3	2		95	0.93	3	yes	T2 **(12)**	II B **(4)**	yes	PP, EP, EX, A	0	7; 17; 25; 34
2215	MALEIC ANHYDRIDE, MOLTEN	8	C3	III	8+N3	N	3	1	4		95	0.93	3	yes			no	PP, EP	0	7; 17; 20:+88°C; 25; 34
2218	ACRYLIC ACID, STABILIZED	8	CF1	II	8+3+unst.+N1	C	2	2	4	30	95	1.05	1	yes	T2 **(12)**	II B	yes	PP, EP, EX, A	1	3; 4; 5; 17
2227	n-BUTYL METHACRYLATE, STABILIZED	3	F1	III	3+unst.+N3+F	C	2	2		25	95	0.9	1	yes	T3	II A	yes	PP, EX, A	0	3; 5
2238	CHLOROTOLUENES (m-CHLOROTOL-UENE)	3	F1	III	3+N2+S	C	2	2		30	95	1.08	2	yes	T1 **(12)**	II A **(6)**	yes	PP, EX, A	0	
2238	CHLOROTOLUENES (o-CHLOROTOLU-ENE)	3	F1	III	3+N2+S	C	2	2		30	95	1.08	2	yes	T1 **(12)**	II A **(6)**	yes	PP, EX, A	0	
2238	CHLOROTOLUENES (p-CHLOROTOLU-ENE)	3	F1	III	3+N2+S	C	2	2		30	95	1.07	2	yes	T1 **(12)**	II A **(6)**	yes	PP, EX, A	0	6:+11°C; 17
2241	CYCLOHEPTANE	3	F1	II	3+N2	N	2	3		10	97	0.81	3	yes	T4 **(3)**	II A **(6)**	yes	PP, EX, A	1	
2247	n-DECANE	3	F1	III	3+F	C	2	2		30	95	0.73	2	yes	T4	II A	yes	PP, EX, A	0	
2248	DI-n-BUTYLAMINE	8	CF1	II	8+3+N3	N	3	2			97	0.76	3	yes	T3	II A **(6)**	yes	PP, EP, EX, A	1	34
2259	TRIETHYLENETETRAMINE	8	C7	II	8+N2	N	3	3			97	0.98	3	yes	T2 **(12)**	II B (II B3 **(11)**)	yes	PP, EP, EX, A	0	6: 16°C ; 17; 34
2263	DIMETHYLCYCLOHEXANES (cis-1,4-DIMETHYL- CYCLOHEXANE)	3	F1	II	3	C	2	2		35	95	0.78	2	yes	T4 **(3)**	II A **(6)**	yes	PP, EX, A	1	
2263	DIMETHYLCYCLOHEXANES (trans-1,4-DIMETHYL- CYCLOHEXANE)	3	F1	II	3	C	2	2		35	95	0.76	2	yes	T4 **(3)**	II A **(6)**	yes	PP, EX, A	1	

UN No. or substance identification No.	Name and description	Class	Classification code	Packing group	Danger labels	Type of tank vessel	Cargo tank design	Cargo tank type	Cargo tank equipment	Opening pressure of the pressure relief valve / high-velocity vent valve in kPa	Maximum degree of filling in %	Relative density at 20°C	Type of sampling device	Pump-room below deck permitted	Temperature class	Explosion group	Anti-explosion protection required	Equipment required	Number of cones/blue lights	Additional requirements / Remarks
(1)	(2)	3(a)	3(b)	(4)	(5)	(6)	(7)	(8)	(9)	(10)	(11)	(12)	(13)	(14)	(15)	(16)	(17)	(18)	(19)	(20)
2264	N,N-DIMETHYL- CYCLOHEXYLAMINE	8	CF1	II	8+3+N2	N	3	3			97	0.85	3	yes	T3	II B **(4)**	yes	PP, EP, EX, A	1	34
2265	N,N-DIMETHYLFORMAMIDE	3	F1	III	3+CMR	N	2	3	3	10	97	0.95	3	yes	T2 **(12)**	II A	yes	PP, EP, EX, TOX, A	0	
2266	DIMETHYL-N-PROPYLAMINE	3	FC	II	3+8	C	2	2	3	50	95	0.72	2	yes	T4	II A **(6)**	yes	PP, EP, EX, A	1	23
2276	2-ETHYLHEXYLAMINE	3	FC	III	3+8+N3	N	3	2			97	0.79	3	yes	T3	II A **(6)**	yes	PP, EP, EX, A	0	34
2278	n-HEPTENE	3	F1	II	3+N3	N	2	2		10	97	0.7	3	yes	T3	II B **(4)**	yes	PP, EX, A	1	
2280	HEXAMETHYLENEDIAMINE, SOLID, MOLTEN	8	C8	III	8+N3	N	3	3	2		95	0.83	3	yes	T3	II B (II B3 **(11)**)	yes	PP, EP, EX, A	0	7; 17; 34
2280	HEXAMETHYLENEDIAMINE, SOLID, MOLTEN	8	C8	III	8+N3	N	3	3	4		95	0.83	3	yes			no	PP, EP	0	7; 17; 20:+66°C; 34
2282	HEXANOLS	3	F1	III	3+N3	N	3	2			97	0.83	3	yes	T3	II A	yes	PP, EX, A	0	
2286	PENTAMETHYLHEPTANE	3	F1	III	3+F	N	3	3			97	0.75	3	yes	T2 **(12)**	II A **(6)**	yes	PP, EX, A	0	
2288	ISOHEXENES	3	F1	II	3+unst.+N3	C	2	2	3	50	95	0.735	2	yes	T2 **(12)**	II B **(4)**	yes	PP, EX, A	1	3; 23
2289	ISOPHORONEDIAMINE	8	C7	III	8+N2	N	3	3			97	0.92	3	yes	T2 **(12)**	II A **(6)**	yes	PP, EP, EX, A	0	6: 14°C; 17; 34
2302	5-METHYLHEXAN-2-ONE	3	F1	III	3	N	3	2			97	0.81	3	yes	T1 **(12)**	II A	yes	PP, EX, A	0	
2303	ISOPROPENYLBENZENE	3	F1	III	3+N2+F	N	3	3			97	0.91	3	yes	T2 **(12)**	II B	yes	PP, EX, A	0	

UN No. or substance identification No.	Name and description	Class	Classification code	Packing group	Danger labels	Type of tank vessel	Cargo tank design	Cargo tank type	Cargo tank equipment	Opening pressure of the pressure relief valve / high-velocity vent valve in kPa	Maximum degree of filling in %	Relative density at 20°C	Type of sampling device	Pump-room below deck permitted	Temperature class	Explosion group	Anti-explosion protection required	Equipment required	Number of cones/blue lights	Additional requirements / Remarks
(1)	(2)	3(a)	3(b)	(4)	(5)	(6)	(7)	(8)	(9)	(10)	(11)	(12)	(13)	(14)	(15)	(16)	(17)	(18)	(19)	(20)
2309	OCTADIENE (1,7-OCTADIENE)	3	F1	II	3+N2	N	2	3		10	97	0.75	3	yes	T3	II B (II B3)	yes	PP, EX, A	1	
2311	PHENETIDINES	6.1	T1	III	6.1	C	2	2		25	95	1.07	2	no			no	PP, EP, TOX, A	0	6:+7°C; 17
2312	PHENOL, MOLTEN	6.1	T1	II	6.1+N3+S	C	2	2	4	25	95	1.07	2	no	T1 **(12)**	II A **(7)**	yes	PP, EP, EX, TOX, A	2	7; 17
2312	PHENOL, MOLTEN	6.1	T1	II	6.1+N3+S	C	2	2	4	25	95	1.07	2	no			no	PP, EP, TOX, A	2	7; 17; 20:+67°C
2320	TETRAETHYLENEPENTAMINE	8	C7	III	8+N2	N	4	3			97	1	3	yes			no	PP, EP	0	34
2321	TRICHLOROBENZENES, LIQUID (1,2,4-TRICHLOROBENZENE)	6.1	T1	III	6.1+N1+S	C	2	2	2	25	95	1.45	2	no	T1 **(12)**	II A **(6)**	yes	PP, EP, EX, TOX, A	0	7; 17
2321	TRICHLOROBENZENES, LIQUID (1,2,4-TRICHLOROBENZENE)	6.1	T1	III	6.1+N1+S	C	2	1	4	25	95	1.45	2	no			no	PP, EP, TOX, A	0	7; 17; 20:+95°C; 26
2323	TRIETHYL PHOSPHITE	3	F1	III	3	N	3	2			97	0.8	3	yes	T3	II B **(4)**	yes	PP, EX, A	0	
2324	TRIISOBUTYLENE	3	F1	III	3+N1+F	C	2	2		35	95	0.76	2	yes	T2 **(12)**	II B **(4)**	yes	PP, EX, A	0	
2325	1,3,5-TRIMETHYLBENZENE	3	F1	III	3+N1	C	2	2		35	95	0.87	2	yes	T1 **(12)**	II A **(6)**	yes	PP, EX, A	0	
2333	ALLYL ACETATE	3	FT1	II	3+6.1	C	2	2		40	95	0.93	2	no	T2 **(12)**	II A **(6)**	yes	PP, EP, EX, TOX, A	2	
2348	BUTYL ACRYLATES, STABILIZED (n-BUTYL ACRYLATE, STABILIZED)	3	F1	III	3+unst.+N3	C	2	2		30	95	0.9	1	yes	T3	II B	yes	PP, EX, A	0	3; 5
2350	BUTYL METHYL ETHER	3	F1	II	3	N	2	2		10	97	0.74	3	yes	T4 **(3)**	II B **(4)**	yes	PP, EX, A	1	

UN No. or substance identification No.	Name and description	Class	Classification code	Packing group	Danger labels	Type of tank vessel	Cargo tank design	Cargo tank type	Cargo tank equipment	Opening pressure of the pressure relief valve / high-velocity vent valve in kPa	Maximum degree of filling in %	Relative density at 20°C	Type of sampling device	Pump-room below deck permitted	Temperature class	Explosion group	Anti-explosion protection required	Equipment required	Number of cones/blue lights	Additional requirements / Remarks
(1)	(2)	3(a)	3(b)	(4)	(5)	(6)	(7)	(8)	(9)	(10)	(11)	(12)	(13)	(14)	(15)	(16)	(17)	(18)	(19)	(20)
2356	2-CHLOROPROPANE	3	F1	I	3	C	2	2	3	50	95	0.86	2	yes	T1 **(12)**	II A	yes	PP, EX, A	1	23
2357	CYCLOHEXYLAMINE	8	CF1	II	8+3+N3	N	3	2			97	0.86	3	yes	T3	II A	yes	PP, EP, EX, A	1	34
2362	1,1-DICHLOROETHANE	3	F1	II	3+N2	C	2	2	3	50	95	1.17	2	yes	T2 **(12)**	II A	yes	PP, EX, A	1	23
2370	1-HEXENE	3	F1	II	3+N3	N	2	2		10	97	0.67	3	yes	T3	II B **(4)**	yes	PP, EX, A	1	
2381	DIMÉTHYL DISULPHIDE	3	FT1	II	3+6.1	C	2	2		40	95	1.06 3	2	yes	T2 **(12)**	II A	yes	PP, EP, EX, TOX, A	2	
2382	DIMETHYLHYDRAZINE, SYMMETRICAL	6.1	TF1	I	6.1+3+CMR	C	2	2		50	95	0.83	1	no	T4 **(3)**	II C **(5)**	yes	PP, EP, EX, TOX, A	2	
2383	DIPROPYLAMINE	3	FC	II	3+8+N3	C	2	2		35	95	0.74	2	yes	T3	II A	yes	PP, EP, EX, A	1	
2397	3-METHYLBUTAN-2-ONE	3	F1	II	3	N	2	2		10	97	0.81	3	yes	T1 **(12)**	II A **(6)**	yes	PP, EX, A	1	
2398	METHYL tert-BUTYL ETHER	3	F1	II	3	N	2	2		10	97	0.74	3	yes	T1 **(12)**	II A	yes	PP, EX, A	1	
2404	PROPIONITRILE	3	FT1	II	3+6.1	C	2	2		45	95	0.78	2	no	T1 **(8)** **(12)**	II A **(6)**	yes	PP, EP, EX, TOX, A	2	
2414	THIOPHENE	3	F1	II	3+N3+S	N	2	3		10	97	1.06	3	yes	T2 **(12)**	II A	yes	PP, EX, A	1	
2430	ALKYLPHENOLS, SOLID, N.O.S. (NONYLPHENOL, ISOMERIC MIXTURE, MOLTEN)	8	C4	II	8+N1+F	N	3	1	2		95	0.95	2	yes	T2 **(12)**	II A **(6)**	yes	PP, EP, EX, A	0	7; 17

UN No. or substance identification No.	Name and description	Class	Classification code	Packing group	Danger labels	Type of tank vessel	Cargo tank design	Cargo tank type	Cargo tank equipment	Opening pressure of the pressure relief valve / high-velocity vent valve in kPa	Maximum degree of filling in %	Relative density at 20°C	Type of sampling device	Pump-room below deck permitted	Temperature class	Explosion group	Anti-explosion protection required	Equipment required	Number of cones/blue lights	Additional requirements / Remarks
(1)	(2)	3(a)	3(b)	(4)	(5)	(6)	(7)	(8)	(9)	(10)	(11)	(12)	(13)	(14)	(15)	(16)	(17)	(18)	(19)	(20)
2430	ALKYLPHENOLS, SOLID, N.O.S. (NONYLPHENOL, ISOMERIC MIXTURE, MOLTEN)	8	C4	II	8+N1+F	N	3	2	4		95	0.95	2	yes			no	PP, EP	0	7; 17; 20:+125°C
2432	N,N-DIETHYLANILINE	6.1	T1	III	6.1+N2	C	2	2		25	95	0.93	2	no			no	PP, EP, TOX, A	0	
2448	SULPHUR, MOLTEN	4.1	F3	III	4.1+S	N	4	1	4		95	2.07	3	yes			no	PP, EP, TOX*, A	0	* Toximeter for H2S; 7; 17 20:+150°C; 28; 32
2458	HEXADIENES	3	F1	II	3+N3	N	2	2		10	97	0.72	3	yes	T4 **(3)**	II B **(4)**	yes	PP, EX, A	1	
2477	METHYL ISOTHIOCYANATE	6.1	TF1	I	6.1+3+N1	C	2	2	2	35	95	1.07 **(10)**	1	no	T4 **(3)**	II B **(4)**	yes	PP, EP, EX, TOX, A	2	7; 17
2485	n-BUTYL ISOCYANATE	6.1	TF1	I	6.1+3	C	2	2		35	95	0.89	1	no	T2 **(12)**	II A	yes	PP, EP, EX, TOX, A	2	
2486	ISOBUTYL ISOCYANATE	6.1	TF1	I	6.1+3	C	2	2		40	95		1	no	T4 **(3)**	II A	yes	PP, EP, EX, TOX, A	2	
2487	PHENYL ISOCYANATE	6.1	TF1	I	6.1+3	C	2	2		25	95	1.1	1	no	T1 **(12)**	II A	yes	PP, EP, EX, TOX, A	2	
2490	DICHLOROISOPROPYL ETHER	6.1	T1	II	6.1	C	2	2		25	95	1.11	2	no			no	PP, EP, TOX, A	2	
2491	ETHANOLAMINE or ETHANOLAMINE SOLUTION	8	C7	III	8+N3	N	3	2			97	1.02	3	yes	T2 **(12)**	II B **(4)**	yes	PP, EP, EX, A	0	6: 14°C; 17; 34
2493	HEXAMETHYLENEIMINE	3	FC	II	3+8+N3	N	3	2			97	0.88	3	yes	T3 **(2)**	II A	yes	PP, EP, EX, A	1	34
2496	PROPIONIC ANHYDRIDE	8	C3	III	8+N3	N	4	3			97	1.02	3	yes			no	PP, EP	0	34

UN No. or substance identification No.	Name and description	Class	Classification code	Packing group	Danger labels	Type of tank vessel	Cargo tank design	Cargo tank type	Cargo tank equipment	Opening pressure of the pressure relief valve / high-velocity vent valve in kPa	Maximum degree of filling in %	Relative density at 20°C	Type of sampling device	Pump-room below deck permitted	Temperature class	Explosion group	Anti-explosion protection required	Equipment required	Number of cones/blue lights	Additional requirements / Remarks
(1)	(2)	3(a)	3(b)	(4)	(5)	(6)	(7)	(8)	(9)	(10)	(11)	(12)	(13)	(14)	(15)	(16)	(17)	(18)	(19)	(20)
2518	1,5,9-CYCLODODECATRIENE	6.1	T1	III	6.1+F	C	2	2		25	95	0.9	2	no			no	PP, EP, TOX, A	0	
2527	ISOBUTYL ACRYLATE, STABILIZED	3	F1	III	3+unst.	C	2	2		30	95	0.89	1	yes	T2 **(12)**	II B **(8)**	yes	PP, EX, A	0	3; 5
2528	ISOBUTYL ISOBUTYRATE	3	F1	III	3+N3	N	3	2			97	0.86	3	yes	T2 **(12)**	II A	yes	PP, EX, A	0	
2531	METHACRYLIC ACID, STABILIZED	8	C3	II	8+unst.+N3	C	2	2	4	25	95	1.02	1	yes	T2 **(12)**	II A	yes	PP, EP, EX, A	0	3; 4; 5; 7; 17
2564	TRICHLOROACETIC ACID SOLUTION	8	C3	II	8+N1	C	2	2	2	25	95	1.62 **(10)**	2	yes	T1 **(12)**	II A **(6)**	yes	PP, EP, EX, A	0	7; 17; 22
2564	TRICHLOROACETIC ACID SOLUTION	8	C3	III	8+N1	C	2	2		25	95	1.62 **(10)**	2	yes			no	PP, EP	0	22
2574	TRICRESYL PHOSPHATE with more than 3% ortho isomer	6.1	T1	II	6.1+N1+S	C	2	2		25	95	1.18	2	no			no	PP, EP, TOX, A	2	
2579	PIPERAZINE, MOLTEN	8	C8	III	8+N2	N	3	3	2		95	0.9	3	yes			no	PP, EP	0	7; 17; 34
2582	FERRIC CHLORIDE SOLUTION	8	C1	III	8	N	4	3			97	1.45	3	yes			no	PP, EP	0	22; 30; 34
2586	ALKYLSULPHONIC ACIDS, LIQUID or ARYLSULPHONIC ACIDS, LIQUID with not more than 5% free sulphuric acid	8	C3	III	8	N	4	3			97		3	yes			no	PP, EP	0	34
2608	NITROPROPANES	3	F1	III	3	N	3	2			97	1	3	yes	T2 **(12)**	II B **(6)**	yes	PP, EX, A	0	
2615	ETHYL PROPYL ETHER	3	F1	II	3	N	2	2		10	97	0.73	3	yes	T4 **(3)**	II A **(6)**	yes	PP, EX, A	1	
2618	VINYLTOLUENES, STABILIZED	3	F1	III	3+unst.+N2+F	C	2	2		25	95	0.92	1	yes	T1 **(12)**	II A	yes	PP, EX, A	0	3; 5
2651	4,4'-DIAMINO- DIPHENYLMETHANE	6.1	T2	III	6.1+N2+CMR+S	C	2	2	2	25	95	1	2	no			no	PP, EP, TOX, A	0	7; 17

UN No. or substance identification No.	Name and description	Class	Classification code	Packing group	Danger labels	Type of tank vessel	Cargo tank design	Cargo tank type	Cargo tank equipment	Opening pressure of the pressure relief valve / high-velocity vent valve in kPa	Maximum degree of filling in %	Relative density at 20°C	Type of sampling device	Pump-room below deck permitted	Temperature class	Explosion group	Anti-explosion protection required	Equipment required	Number of cones/blue lights	Additional requirements / Remarks
(1)	(2)	3(a)	3(b)	(4)	(5)	(6)	(7)	(8)	(9)	(10)	(11)	(12)	(13)	(14)	(15)	(16)	(17)	(18)	(19)	(20)
2672	AMMONIA SOLUTION, relative density between 0.880 and 0.957 at 15°C in water, with more than 10% but not more than 35% ammonia (more than 25% but not more than 35% ammonia)	8	C5	III	8+N1	C	2	2	1	50	95	0.88 **(9)** - 0.96 **(9)**	2	yes			no	PP, EP	0	
2672	AMMONIA SOLUTION relative density between 0.880 and 0.957 at 15°C in water, with more than 10% but not more than 35% ammonia (more than 25% ammonia)	8	C5	III	8+N3	N	2	2		10	95	0.88 **(9)** - 0.96 **(9)**	2	yes			no	PP, EP	0	34
2683	AMMONIUM SULPHIDE SOLUTION	8	CFT	II	8+3+6.1	C	2	2		50	95		2	no	T4 **(3)**	II B **(4)**	yes	PP, EP, EX, TOX, A	2	15; 16
2693	BISULPHITES, AQUEOUS SOLUTION, N.O.S.	8	C1	III	8	N	4	3			97		3	yes			no	PP, EP	0	27; 34
2709	BUTYLBENZENES	3	F1	III	3+N1+F	N	2	3		35	97	0.87	2	yes	T2 **(12)**	II A **(6)**	yes	PP, EX, A	0	41
2709	BUTYLBENZENES (n-BUTYLBENZENE)	3	F1	III	3+N1+F	N	3	3			97	0.87	2	yes	T2 **(12)**	II A	yes	PP, EX, A	0	41
2733	AMINES, FLAMMABLE, CORROSIVE, N.O.S. or POLYAMINES, FLAMMABLE, CORROSIVE, N.O.S. (2-AMINOBU-TANE)	3	FC	II	3+8+N1	C	2	2	3	50	95	0.72	2	yes	T4 **(3)**	II A **(6)**	yes	PP, EP, EX, A	1	23
2735	AMINES, LIQUID, CORROSIVE, N.O.S. or POLYAMINES, LIQUID, CORROSIVE, N.O.S. vp50≤12.5kPa	8	C7	I	8+(N1, N2, N3, CMR, F or S)	N	4	2			97		3	yes			no	PP, EP	0	22; 27; 34
2735	AMINES, LIQUID, CORROSIVE, N.O.S. or POLYAMINES, LIQUID, CORROSIVE, N.O.S. vp50 > 12.5 kPa	8	C7	I	8+(N1, N2, N3, CMR, F or S)	N	2	3		10	97		3	yes			no	PP, EP	0	22; 27; 34

UN No. or substance identification No.	Name and description	Class	Classification code	Packing group	Danger labels	Type of tank vessel	Cargo tank design	Cargo tank type	Cargo tank equipment	Opening pressure of the pressure relief valve / high-velocity vent valve in kPa	Maximum degree of filling in %	Relative density at 20°C	Type of sampling device	Pump-room below deck permitted	Temperature class	Explosion group	Anti-explosion protection required	Equipment required	Number of cones/blue lights	Additional requirements / Remarks
(1)	(2)	3(a)	3(b)	(4)	(5)	(6)	(7)	(8)	(9)	(10)	(11)	(12)	(13)	(14)	(15)	(16)	(17)	(18)	(19)	(20)
2735	AMINES, LIQUID, CORROSIVE, N.O.S. or POLYAMINES, LIQUID, CORROSIVE, N.O.S. vp50 ≤ 12.5 kPa	8	C7	II	8+(N1, N2, N3, CMR, F or S)	N	4	2			97		3	yes			no	PP, EP	0	22; 27; 34
2735	AMINES, LIQUID, CORROSIVE, N.O.S. or POLYAMINES, LIQUID, CORROSIVE, N.O.S. vp50 > 12.5 kPa	8	C7	II	8+(N1, N2, N3, CMR, F or S)	N	2	3		10	97		3	yes			no	PP, EP	0	22; 27; 34
2735	AMINES, LIQUID, CORROSIVE, N.O.S. or POLYAMINES, LIQUID, CORROSIVE, N.O.S.	8	C7	III	8+(N1, N2, N3, CMR, F or S)	N	4	2			97		3	yes			no	PP, EP	0	22; 27; 34
2754	N-ETHYLTOLUIDINES (N-ETHYL-o-TOLUIDINE)	6.1	T1	II	6.1+F	C	2	2		25	95	0.94	2	no			no	PP, EP, TOX, A	2	
2754	N-ETHYLTOLUIDINES (N-ETHYL-m-TOLUIDINE)	6.1	T1	II	6.1+F	C	2	2		25	95	0.94	2	no			no	PP, EP, TOX, A	2	
2754	N-ETHYLTOLUIDINES (N-ETHYL-o-TOLUIDINE and N-ETHYL-m-TOLUIDINE MIXTURES)	6.1	T1	II	6.1+F	C	2	2		25	95	0.94	2	no			no	PP, EP, TOX, A	2	
2754	N-ETHYLTOLUIDINES (N-ETHYL-p-TOLUIDINE)	6.1	T1	II	6.1+F	C	2	2	2	25	95	0.94	2	no			no	PP, EP, TOX, A	2	7; 17
2785	4-THIAPENTANAL (3-METHYLMERCAPTO- PROPIONALDEHYDE)	6.1	T1	III	6.1	C	2	2		25	95	1.04	2	no			no	PP, EP, TOX, A	0	
2789	ACETIC ACID, GLACIAL or ACETIC ACID SOLUTION, more than 80% acid, by mass	8	CF1	II	8+3	N	2	3	2	10	95	1.05 with 100 % acid	3	yes	T1 **(12)**	II A **(6)**	yes	PP, EP, EX, A	1	7; 17; 34
2790	ACETIC ACID SOLUTION, not less than 50% but not more than 80% acid, by mass	8	C3	II	8	N	2	3		10	97		3	yes			no	PP, EP	0	34

UN No. or substance identification No.	Name and description	Class	Classification code	Packing group	Danger labels	Type of tank vessel	Cargo tank design	Cargo tank type	Cargo tank equipment	Opening pressure of the pressure relief valve / high-velocity vent valve in kPa	Maximum degree of filling in %	Relative density at 20°C	Type of sampling device	Pump-room below deck permitted	Temperature class	Explosion group	Anti-explosion protection required	Equipment required	Number of cones/blue lights	Additional requirements / Remarks
(1)	(2)	3(a)	3(b)	(4)	(5)	(6)	(7)	(8)	(9)	(10)	(11)	(12)	(13)	(14)	(15)	(16)	(17)	(18)	(19)	(20)
2790	ACETIC ACID SOLUTION, more than 10% and less than 50% acid, by mass	8	C3	III	8	N	2	3		10	97		3	yes			no	PP, EP	0	34
2796	BATTERY FLUID, ACID	8	C1	II	8+N3	N	4	3			97	1.00 - 1.84	3	yes			no	PP, EP	0	8; 22; 30; 34
2796	SULPHURIC ACID with not more than 51% acid	8	C1	II	8+N3	N	4	3			97	1.00 - 1.41	3	yes			no	PP, EP	0	8; 22; 30; 34
2797	BATTERY FLUID, ALKALI	8	C5	II	8+N3	N	4	3			97	1.00 - 2.13	3	yes			no	PP, EP	0	22; 30; 34
2810	TOXIC LIQUID, ORGANIC, N.O.S. 60°C < Initial boiling point ≤ 85°C	6.1	T1	I	6.1+(N1, N2, N3, CMR, F or S)	C	2	2	3	50	95		1	no			no	PP, EP, TOX, A	2	22; 23; 27
2810	TOXIC LIQUID, ORGANIC, N.O.S. 85°C < Initial boiling point ≤ 115°C	6.1	T1	I	6.1+(N1, N2, N3, CMR, F or S)	C	2	2		50	95		1	no			no	PP, EP, TOX, A	2	22; 27
2810	TOXIC LIQUID, ORGANIC, N.O.S. 115°C < Initial boiling point	6.1	T1	I	6.1+(N1, N2, N3, CMR, F or S)	C	2	2		35	95		1	no			no	PP, EP, TOX, A	2	22; 27
2810	TOXIC LIQUID, ORGANIC, N.O.S. 60°C < Initial boiling point ≤ 85°C	6.1	T1	II	6.1+(N1, N2, N3, CMR, F or S)	C	2	2	3	50	95		2	no			no	PP, EP, TOX, A	2	22; 23; 27
2810	TOXIC LIQUID, ORGANIC, N.O.S. 85°C < Initial boiling point ≤ 115°C	6.1	T1	II	6.1+(N1, N2, N3, CMR, F or S)	C	2	2		50	95		2	no			no	PP, EP, TOX, A	2	22; 27
2810	TOXIC LIQUID, ORGANIC, N.O.S. 115°C < Initial boiling point	6.1	T1	II	6.1+(N1, N2, N3, CMR, F or S)	C	2	2		35	95		2	no			no	PP, EP, TOX, A	2	22; 27
2810	TOXIC LIQUID, ORGANIC, N.O.S. 60°C < Initial boiling point ≤ 85°C	6.1	T1	III	6.1+(N1, N2, N3, CMR, F or S)	C	2	2	3	50	95		2	no			no	PP, EP, TOX, A	0	22; 23; 27
2810	TOXIC LIQUID, ORGANIC, N.O.S. 85°C < Initial boiling point ≤ 115°C	6.1	T1	III	6.1+(N1, N2, N3, CMR, F or S)	C	2	2		50	95		2	no			no	PP, EP, TOX, A	0	22; 27

UN No. or substance identification No.	Name and description	Class	Classification code	Packing group	Danger labels	Type of tank vessel	Cargo tank design	Cargo tank type	Cargo tank equipment	Opening pressure of the pressure relief valve / high-velocity vent valve in kPa	Maximum degree of filling in %	Relative density at 20°C	Type of sampling device	Pump-room below deck permitted	Temperature class	Explosion group	Anti-explosion protection required	Equipment required	Number of cones/blue lights	Additional requirements / Remarks
(1)	(2)	3(a)	3(b)	(4)	(5)	(6)	(7)	(8)	(9)	(10)	(11)	(12)	(13)	(14)	(15)	(16)	(17)	(18)	(19)	(20)
2810	TOXIC LIQUID, ORGANIC, N.O.S. 115°C < Initial boiling point	6.1	T1	III	6.1+(N1, N2, N3, CMR, F or S)	C	2	2		35	95		2	no			no	PP, EP, TOX, A	0	22; 27
2811	TOXIC SOLID, ORGANIC, N.O.S. (1,2,3-TRICHLOROBENZENE, MOLTEN)	6.1	T2	III	6.1+S	C	2	2	2	25	95		2	no	T4 **(3)**	II B **(4)**	yes	PP, EP, EX, TOX, A	0	7; 17; 22
2811	TOXIC SOLID, ORGANIC, N.O.S. (1,2,3-TRICHLOROBENZENE, MOLTEN)	6.1	T2	III	6.1+S	C	2	1	4	25	95		2	no			no	PP, EP, TOX, A	0	7; 17; 20:+92°C; 22; 26
2811	TOXIC SOLID, ORGANIC, N.O.S. (1,3,5-TRICHLOROBENZENE, MOLTEN)	6.1	T2	III	6.1+S	C	2	2	2	25	95		2	no	T4 **(3)**	II B **(4)**	yes	PP, EP, EX, TOX, A	0	7; 17; 22
2811	TOXIC SOLID, ORGANIC, N.O.S. (1,3,5-TRICHLOROBENZENE, MOLTEN)	6.1	T2	III	6.1+S	C	2	1	4	25	95		2	no			no	PP, EP, TOX, A	0	7; 17; 20:+92°C; 22; 26
2815	N-AMINOETHYL PIPERAZINE	8	C7	III	8+N2	N	4	3			97	0.98	3	yes			no	PP, EP	0	34
2820	BUTYRIC ACID	8	C3	III	8+N3	N	2	3		10	97	0.96	3	yes			no	PP, EP	0	34
2829	CAPROIC ACID	8	C3	III	8+N3	N	4	3			97	0.92	3	yes			no	PP, EP	0	34
2831	1,1,1-TRICHLOROETHANE	6.1	T1	III	6.1+N2	C	2	2	3	50	95	1.34	2	no			no	PP, EP, TOX, A	0	23
2850	PROPYLENE TETRAMER	3	F1	III	3+N1+F	N	4	3			97	0.76	2	yes	T3		no	PP	0	
2874	FURFURYL ALCOHOL	6.1	T1	III	6.1+N3	C	2	2		25	95	1.13	2	no			no	PP, EP, TOX, A	0	
2904	PHENOLATES, LIQUID	8	C9	III	8	N	4	2			97	1.13 - 1.18	3	yes			no	PP, EP	0	34
2920	CORROSIVE LIQUID, FLAMMABLE, N.O.S. (2- PROPANOL AND DODECYLDIMETHYL- AMMONIUM CHLORIDE, AQUEOUS SOLUTION)	8	CF1	II	8+3+F	N	3	3			97	0.95	3	yes	T3	II A	yes	PP, EP, EX, A	1	34

UN No. or substance identification No.	Name and description	Class	Classification code	Packing group	Danger labels	Type of tank vessel	Cargo tank design	Cargo tank type	Cargo tank equipment	Opening pressure of the pressure relief valve / high-velocity vent valve in kPa	Maximum degree of filling in %	Relative density at 20°C	Type of sampling device	Pump-room below deck permitted	Temperature class	Explosion group	Anti-explosion protection required	Equipment required	Number of cones/blue lights	Additional requirements / Remarks
(1)	(2)	3(a)	3(b)	(4)	(5)	(6)	(7)	(8)	(9)	(10)	(11)	(12)	(13)	(14)	(15)	(16)	(17)	(18)	(19)	(20)
2920	CORROSIVE LIQUID, FLAMMABLE, N.O.S. (AQUEOUS SOLUTION OF HEXADECYLTRIMETHYL- AMMONIUM CHLORIDE (50%) AND ETHANOL (35%))	8	CF1	II	8+3+F	N	2	3		10	95	0.9	3	yes	T2 **(12)**	II B	yes	PP, EP, EX, A	1	6:+7°C; 17; 34
2920	CORROSIVE LIQUID, FLAMMABLE, N.O.S. (AQUEOUS SOLUTION OF HEXADECYLTRIMETHYL- AMMONIUM CHLORIDE (50%) AND ETHANOL (35%))	8	CF1	II	8+3+F	N	2	3		10	95	0.9	3	yes	T2 **(12)**	II B (II B3)	yes	PP, EP, EX, A	1	6:+7°C; 17; 34; 44
2922	CORROSIVE LIQUID, TOXIC, N.O.S. 60°C < Initial boiling point ≤ 85°C	8	CT1	I	8+6.1+(N1, N2, N3, CMR, F or S)	C	2	2	3	50	95		1	no			no	PP, EP, TOX, A	2	22; 23; 27
2922	CORROSIVE LIQUID, TOXIC, N.O.S. 85°C < Initial boiling point ≤ 115°C	8	CT1	I	8+6.1+(N1, N2, N3, CMR, F or S)	C	2	2		50	95		1	no			no	PP, EP, TOX, A	2	22; 27
2922	CORROSIVE LIQUID, TOXIC, N.O.S. 115°C < Initial boiling point	8	CT1	I	8+6.1+(N1, N2, N3, CMR, F or S)	C	2	2		35	95		1	no			no	PP, EP, TOX, A	2	22; 27
2922	CORROSIVE LIQUID, TOXIC, N.O.S. 60°C < Initial boiling point ≤ 85°C	8	CT1	II	8+6.1+(N1, N2, N3, CMR, F or S)	C	2	2	3	50	95		2	no			no	PP, EP, TOX, A	2	22; 23; 27
2922	CORROSIVE LIQUID, TOXIC, N.O.S. 85°C < Initial boiling point ≤ 115°C	8	CT1	II	8+6.1+(N1, N2, N3, CMR, F or S)	C	2	2		50	95		2	no			no	PP, EP, TOX, A	2	22; 27
2922	CORROSIVE LIQUID, TOXIC, N.O.S. 115°C < Initial boiling point	8	CT1	II	8+6.1+(N1, N2, N3, CMR, F or S)	C	2	2		35	95		2	no			no	PP, EP, TOX, A	2	22; 27
2922	CORROSIVE LIQUID, TOXIC, N.O.S. 60°C < Initial boiling point ≤ 85°C	8	CT1	III	8+6.1+(N1, N2, N3, CMR, F or S)	C	2	2	3	50	95		2	no			no	PP, EP, TOX, A	0	22; 23; 27
2922	CORROSIVE LIQUID, TOXIC, N.O.S. 85°C < Initial boiling point ≤ 115°C	8	CT1	III	8+6.1+(N1, N2, N3, CMR, F or S)	C	2	2		50	95		2	no			no	PP, EP, TOX, A	0	22; 27

UN No. or substance identification No.	Name and description	Class	Classification code	Packing group	Danger labels	Type of tank vessel	Cargo tank design	Cargo tank type	Cargo tank equipment	Opening pressure of the pressure relief valve / high-velocity vent valve in kPa	Maximum degree of filling in %	Relative density at 20°C	Type of sampling device	Pump-room below deck permitted	Temperature class	Explosion group	Anti-explosion protection required	Equipment required	Number of cones/blue lights	Additional requirements / Remarks
(1)	(2)	3(a)	3(b)	(4)	(5)	(6)	(7)	(8)	(9)	(10)	(11)	(12)	(13)	(14)	(15)	(16)	(17)	(18)	(19)	(20)
2922	CORROSIVE LIQUID, TOXIC, N.O.S. 115°C < Initial boiling point	8	CT1	III	8+6.1+(N1, N2, N3, CMR, F or S)	C	2	2		35	95		2	no			no	PP, EP, TOX, A	0	22; 27
2924	FLAMMABLE LIQUID, CORROSIVE, N.O.S. (AQUEOUS SOLUTION OF DIALKYL-(C8-C18)- DIMETHYLAMMO-NIUM CHLORIDE AND 2-PROPANOL)	3	FC	II	3+8+F	C	2	2		50	95	0.88	2	yes	T2 **(12)**	II A	yes	PP, EP, EX, A	1	
2924	FLAMMABLE LIQUID, CORROSIVE, N.O.S. Initial boiling point ≤ 60°C	3	FC	I	3+8+(N1, N2, N3, CMR, F or S)	C	1	1			95		1	yes	T4 **(3)**	II B **(4)**	yes	PP, EP, EX, A	1	22; 27
2924	FLAMMABLE LIQUID, CORROSIVE, N.O.S. 60°C < Initial boiling point ≤ 85°C	3	FC	II	3+8+(N1, N2, N3, CMR, F or S)	C	2	2	3	50	95		2	yes	T4 **(3)**	II B **(4)**	yes	PP, EP, EX, A	1	22; 23; 27
2924	FLAMMABLE LIQUID, CORROSIVE, N.O.S. 85°C < Initial boiling point ≤ 115°C	3	FC	II	3+8+(N1, N2, N3, CMR, F or S)	C	2	2		50	95		2	yes	T4 **(3)**	II B **(4)**	yes	PP, EP, EX, A	1	22; 27
2924	FLAMMABLE LIQUID, CORROSIVE, N.O.S. 115°C < Initial boiling point	3	FC	II	3+8+(N1, N2, N3, CMR, F or S)	C	2	2		35	95		2	yes	T4 **(3)**	II B **(4)**	yes	PP, EP, EX, A	1	22; 27
2924	FLAMMABLE LIQUID, CORROSIVE, N.O.S. 23°C ≤ Flash point ≤ 60°C	3	FC	III	3+8+(N1, N2, N3, CMR, F or S)	N	3	2			97		3	yes	T4 **(3)**	II B **(4)**	yes	PP, EP, EX, A	0	14; 22; 27; 34
2924	FLAMMABLE LIQUID, CORROSIVE, N.O.S. Initial boiling point ≤ 60°C	3	FC	I	3+8+(N1, N2, N3, CMR, F or S)	C	1	1			95		1	yes	T4 **(3)**	II B **(4)** (II B3)	yes	PP, EP, EX, A	1	22; 27; 44
2924	FLAMMABLE LIQUID, CORROSIVE, N.O.S. 60°C < Initial boiling point ≤ 85°C	3	FC	II	3+8+(N1, N2, N3, CMR, F or S)	C	2	2	3	50	95		2	yes	T4 **(3)**	II B **(4)** (II B3)	yes	PP, EP, EX, A	1	22; 23; 27; 44
2924	FLAMMABLE LIQUID, CORROSIVE, N.O.S. 85°C < Initial boiling point ≤ 115°C	3	FC	II	3+8+(N1, N2, N3, CMR, F or S)	C	2	2		50	95		2	yes	T4 **(3)**	II B **(4)** (II B3)	yes	PP, EP, EX, A	1	22; 27; 44

UN No. or substance identification No.	Name and description	Class	Classification code	Packing group	Danger labels	Type of tank vessel	Cargo tank design	Cargo tank type	Cargo tank equipment	Opening pressure of the pressure relief valve / high-velocity vent valve in kPa	Maximum degree of filling in %	Relative density at 20°C	Type of sampling device	Pump-room below deck permitted	Temperature class	Explosion group	Anti-explosion protection required	Equipment required	Number of cones/blue lights	Additional requirements / Remarks
(1)	(2)	3(a)	3(b)	(4)	(5)	(6)	(7)	(8)	(9)	(10)	(11)	(12)	(13)	(14)	(15)	(16)	(17)	(18)	(19)	(20)
2924	FLAMMABLE LIQUID, CORROSIVE, N.O.S. 115°C < Initial boiling point	3	FC	II	3+8+(N1, N2, N3, CMR, F or S)	C	2	2		35	95		2	yes	T4 **(3)**	II B **(4)** (II B3)	yes	PP, EP, EX, A	1	22; 27; 44
2924	FLAMMABLE LIQUID, CORROSIVE, N.O.S. 23°C ≤ Flash point ≤ 60°C	3	FC	III	3+8+(N1, N2, N3, CMR, F or S)	N	3	2			97		3	yes	T4 **(3)**	II B **(4)** (II B3)	yes	PP, EP, EX, A	0	14; 22; 27; 34; 44
2927	TOXIC LIQUID, CORROSIVE, ORGANIC, N.O.S. 60°C < Initial boiling point ≤ 85°C	6.1	TC1	I	6.1+8+(N1, N2, N3, CMR, F or S)	C	2	2	3	50	95		1	no			no	PP, EP, TOX, A	2	22; 23; 27
2927	TOXIC LIQUID, CORROSIVE, ORGANIC, N.O.S. 85°C < Initial boiling point ≤ 115°C	6.1	TC1	I	6.1+8+(N1, N2, N3, CMR, F or S)	C	2	2		50	95		1	no			no	PP, EP, TOX, A	2	22; 27
2927	TOXIC LIQUID, CORROSIVE, ORGANIC, N.O.S. 115°C <Initial boiling point	6.1	TC1	I	6.1+8+(N1, N2, N3, CMR, F or S)	C	2	2		35	95		1	no			no	PP, EP, TOX, A	2	22; 27
2927	TOXIC LIQUID, CORROSIVE, ORGANIC, N.O.S. 60°C <Initial boiling point ≤ 85°C	6.1	TC1	II	6.1+8+(N1, N2, N3, CMR, F or S)	C	2	2	3	50	95		2	no			no	PP, EP, TOX, A	2	22; 23; 27
2927	TOXIC LIQUID, CORROSIVE, ORGANIC, N.O.S. 85°C <Initial boiling point ≤ 115°C	6.1	TC1	II	6.1+8+(N1, N2, N3, CMR, F or S)	C	2	2		50	95		2	no			no	PP, EP, TOX, A	2	22; 27
2927	TOXIC LIQUID, CORROSIVE, ORGANIC, N.O.S. 115°C <Initial boiling point	6.1	TC1	II	6.1+8+(N1, N2, N3, CMR, F or S)	C	2	2		35	95		2	no			no	PP, EP, TOX, A	2	22; 27
2929	TOXIC LIQUID, FLAMMABLE, ORGANIC, N.O.S. 60°C <Initial boiling point ≤ 85°C	6.1	TF1	I	6.1+3+(N1, N2, N3, CMR, F or S)	C	2	2	3	50	95		1	no	T4 **(3)**	II B **(4)**	yes	PP, EP, EX, TOX, A	2	22; 23; 27

UN No. or substance identification No.	Name and description	Class	Classification code	Packing group	Danger labels	Type of tank vessel	Cargo tank design	Cargo tank type	Cargo tank equipment	Opening pressure of the pressure relief valve / high-velocity vent valve in kPa	Maximum degree of filling in %	Relative density at 20°C	Type of sampling device	Pump-room below deck permitted	Temperature class	Explosion group	Anti-explosion protection required	Equipment required	Number of cones/blue lights	Additional requirements / Remarks
(1)	(2)	3(a)	3(b)	(4)	(5)	(6)	(7)	(8)	(9)	(10)	(11)	(12)	(13)	(14)	(15)	(16)	(17)	(18)	(19)	(20)
2929	TOXIC LIQUID, FLAMMABLE, ORGANIC, N.O.S. 85°C <Initial boiling point ≤ 115°C	6.1	TF1	I	6.1+3+(N1, N2, N3, CMR, F or S)	C	2	2		50	95		1	no	T4 **(3)**	II B **(4)**	yes	PP, EP, EX, TOX, A	2	22; 27
2929	TOXIC LIQUID, FLAMMABLE, ORGANIC, N.O.S. 115°C <Initial boiling point	6.1	TF1	I	6.1+3+(N1, N2, N3, CMR, F or S)	C	2	2		35	95		1	no	T4 **(3)**	II B **(4)**	yes	PP, EP, EX, TOX, A	2	22; 27
2929	TOXIC LIQUID, FLAMMABLE, ORGANIC, N.O.S. 60°C <Initial boiling point ≤ 85°C	6.1	TF1	II	6.1+3+(N1, N2, N3, CMR, F or S)	C	2	2	3	50	95		2	no	T4 **(3)**	II B **(4)**	yes	PP, EP, EX, TOX, A	2	22; 23; 27
2929	TOXIC LIQUID, FLAMMABLE, ORGANIC, N.O.S. 85°C <Initial boiling point ≤ 115°C	6.1	TF1	II	6.1+3+(N1, N2, N3, CMR, F or S)	C	2	2		50	95		2	no	T4 **(3)**	II B **(4)**	yes	PP, EP, EX, TOX, A	2	22; 27
2929	TOXIC LIQUID, FLAMMABLE, ORGANIC, N.O.S. 115°C <Initial boiling point	6.1	TF1	II	6.1+3+(N1, N2, N3, CMR, F or S)	C	2	2		35	95		2	no	T4 **(3)**	II B **(4)**	yes	PP, EP, EX, TOX, A	2	22; 27
2929	TOXIC LIQUID, FLAMMABLE, ORGANIC, N.O.S. 60°C <Initial boiling point ≤ 85°C	6.1	TF1	I	6.1+3+(N1, N2, N3, CMR, F or S)	C	2	2	3	50	95		1	no	T4 **(3)**	II B **(4)** (II B3)	yes	PP, EP, EX, TOX, A	2	22; 23; 27; 44
2929	TOXIC LIQUID, FLAMMABLE, ORGANIC, N.O.S. 85°C <Initial boiling point ≤ 115°C	6.1	TF1	I	6.1+3+(N1, N2, N3, CMR, F or S)	C	2	2		50	95		1	no	T4 **(3)**	II B **(4)** (II B3)	yes	PP, EP, EX, TOX, A	2	22; 27; 44
2929	TOXIC LIQUID, FLAMMABLE, ORGANIC, N.O.S. 115°C <Initial boiling point	6.1	TF1	I	6.1+3+(N1, N2, N3, CMR, F or S)	C	2	2		35	95		1	no	T4 **(3)**	II B **(4)** (II B3)	yes	PP, EP, EX, TOX, A	2	22; 27; 44
2929	TOXIC LIQUID, FLAMMABLE, ORGANIC, N.O.S. 60°C <Initial boiling point ≤ 85°C	6.1	TF1	II	6.1+3+(N1, N2, N3, CMR, F or S)	C	2	2	3	50	95		2	no	T4 **(3)**	II B **(4)** (II B3)	yes	PP, EP, EX, TOX, A	2	22; 23; 27; 44

UN No. or substance identification No.	Name and description	Class	Classification code	Packing group	Danger labels	Type of tank vessel	Cargo tank design	Cargo tank type	Cargo tank equipment	Opening pressure of the pressure relief valve / high-velocity vent valve in kPa	Maximum degree of filling in %	Relative density at 20°C	Type of sampling device	Pump-room below deck permitted	Temperature class	Explosion group	Anti-explosion protection required	Equipment required	Number of cones/blue lights	Additional requirements / Remarks
(1)	(2)	3(a)	3(b)	(4)	(5)	(6)	(7)	(8)	(9)	(10)	(11)	(12)	(13)	(14)	(15)	(16)	(17)	(18)	(19)	(20)
2929	TOXIC LIQUID, FLAMMABLE, ORGANIC, N.O.S. 85°C <Initial boiling point ≤ 115°C	6.1	TF1	II	6.1+3+(N1, N2, N3, CMR, F or S)	C	2	2		50	95		2	no	T4 **(3)**	II B **(4)** (II B3)	yes	PP, EP, EX, TOX, A	2	22; 27; 44
2929	TOXIC LIQUID, FLAMMABLE, ORGANIC, N.O.S. 115°C <Initial boiling point	6.1	TF1	II	6.1+3+(N1, N2, N3, CMR, F or S)	C	2	2		35	95		2	no	T4 **(3)**	II B **(4)** (II B3)	yes	PP, EP, EX, TOX, A	2	22; 27; 44
2935	ETHYL-2-CHLORO-PROPIONATE	3	F1	III	3	C	2	2		30	95	1.08	2	yes	T4 **(3)**	II A	yes	PP, EX, A	0	
2947	ISOPROPYL CHLOROACETATE	3	F1	III	3	C	2	2		30	95	1.09	2	yes	T4 **(3)**	II A	yes	PP, EX, A	0	
2966	THIOGLYCOL	6.1	T1	II	6.1	C	2	2		25	95	1.12	2	no			no	PP, EP, TOX, A	2	
2983	ETHYLENE OXIDE AND PROPYLENE OXIDE MIXTURE, with not more than 30% ethylene oxide	3	FT1	I	3+6.1+unst.	C	1	1	3		95	0.85	1	no	T2 **(12)**	II B (II B3)	yes	PP, EP, EX, TOX, A	2	2; 3; 12; 31
2984	HYDROGEN PEROXIDE AQUEOUS SOLUTION with not less than 8%, but less than 20% hydrogen peroxide (stabilized as necessary)	5.1	O1	III	5.1+unst.	C	2	2		35	95	1.06	2	yes			no	PP	0	3; 33
3077	ENVIRONMENTALLY HAZARDOUS SUBSTANCE, SOLID, N.O.S., MOLTEN, (ALKYLAMINE (C12 to C18))	9	M7	III	9+F	N	4	3	2		95	0.79	3	yes			no	PP	0	7; 17
3079	METHACRYLONITRILE, STABILIZED	6.1	TF1	I	6.1+3+unst.+ N3	C	2	2		45	95	0.8	1	no	T1 **(12)**	II B **(4)**	yes	PP, EP, EX, TOX, A	2	3; 5
3082	ENVIRONMENTALLY HAZARDOUS SUBSTANCE, LIQUID, N.O.S. (BILGE WATER, FREE OF SLUDGE)	9	M6	III	9+N2+F	N	4	3			97		3	yes			no	PP	0	

UN No. or substance identification No.	Name and description	Class	Classification code	Packing group	Danger labels	Type of tank vessel	Cargo tank design	Cargo tank type	Cargo tank equipment	Opening pressure of the pressure relief valve / high-velocity vent valve in kPa	Maximum degree of filling in %	Relative density at 20°C	Type of sampling device	Pump-room below deck permitted	Temperature class	Explosion group	Anti-explosion protection required	Equipment required	Number of cones/blue lights	Additional requirements / Remarks
(1)	(2)	3(a)	3(b)	(4)	(5)	(6)	(7)	(8)	(9)	(10)	(11)	(12)	(13)	(14)	(15)	(16)	(17)	(18)	(19)	(20)
3082	ENVIRONMENTALLY HAZARDOUS SUBSTANCE, LIQUID, N.O.S. (heavy heating oil)	9	M6	III	9+CMR+ (N1, N2, F or S)	N	2	3		10	97		3	yes			no	PP	0	
3082	ENVIRONMENTALLY HAZARDOUS SUBSTANCE, LIQUID, N.O.S.	9	M6	III	9+(N1, N2, CMR, F or S)	N	4	3			97		3	yes			no	PP	0	22; 27
3082	ENVIRONMENTALLY HAZARDOUS SUBSTANCE, LIQUID, N.O.S. (BILGE WATER, CONTAINS SLUDGE)	9	M6	III	9+CMR+N1	N	2	3		10	97		3	yes			no	PP, EP, TOX, A	0	45
3082	ENVIRONMENTALLY HAZARDOUS SUBSTANCE, LIQUID, N.O.S. (OIL SLUDGE)	9	M6	III	9+CMR+N1	N	2	3		10	97		3	yes			no	PP, EP, TOX, A	0	45
3092	1-METHOXY-2-PROPANOL	3	F1	III	3	N	3	2			97	0.92	3	yes	T3	II B	yes	PP, EX, A	0	
3145	ALKYLPHENOLS, LIQUID, N.O.S. (including C2-C12 homologues)	8	C3	II	8+N3	N	4	3			97	0.95	3	yes			no	PP, EP	0	27; 34
3145	ALKYLPHENOLS, LIQUID, N.O.S. (including C2-C12 homologues)	8	C3	III	8+N3	N	4	3			97	0.95	3	yes			no	PP, EP	0	27; 34
3175	SOLIDS CONTAINING FLAMMABLE LIQUID, N.O.S., MOLTEN, having a flash-point up to 60°C (2- PROPANOL AND DIALKYL-(C12 to C18)- DIMETH-YLAMMONIUM CHLORIDE)	4.1	F1	II	4.1	N	3	3	4		95	0.86	3	yes	T2 **(12)**	II A **(6)**	yes	PP, EX, A	1	7; 17
3256	ELEVATED TEMPERATURE LIQUID, FLAMMABLE, N.O.S. with flash-point above 60°C, at or above its flash-point (CARBON BLACK REEDSTOCK) (PYROL-YSIS OIL)	3	F2	III	3+F	N	3	3	2		95		3	yes	T1 **(12)**	II B	yes	PP, EX, A	0	7; 17

UN No. or substance identification No.	Name and description	Class	Classification code	Packing group	Danger labels	Type of tank vessel	Cargo tank design	Cargo tank type	Cargo tank equipment	Opening pressure of the pressure relief valve / high-velocity vent valve in kPa	Maximum degree of filling in %	Relative density at 20°C	Type of sampling device	Pump-room below deck permitted	Temperature class	Explosion group	Anti-explosion protection required	Equipment required	Number of cones/blue lights	Additional requirements / Remarks
(1)	(2)	3(a)	3(b)	(4)	(5)	(6)	(7)	(8)	(9)	(10)	(11)	(12)	(13)	(14)	(15)	(16)	(17)	(18)	(19)	(20)
3256	ELEVATED TEMPERATURE LIQUID, FLAMMABLE, N.O.S. with flash-point above 60°C, at or above its flash-point (PYROLYSIS OIL A)	3	F2	III	3+F	N	3	3	2		95		3	yes	T1 **(12)**	II B	yes	PP, EX, A	0	7; 17
3256	ELEVATED TEMPERATURE LIQUID, FLAMMABLE, N.O.S. with flash-point above 60°C, at or above its flash-point (RESIDUAL OIL)	3	F2	III	3+F	N	3	3	2		95		3	yes	T1 **(12)**	II B	yes	PP, EX, A	0	7; 17
3256	ELEVATED TEMPERATURE LIQUID, FLAMMABLE, N.O.S. with flash-point above 60°C, at or above its flash-point (MIXTURE OF CRUDE NAPHTHALINE)	3	F2	III	3+F	N	3	3	2		95		3	yes	T1 **(12)**	II B	yes	PP, EX, A	0	7; 17
3256	ELEVATED TEMPERATURE LIQUID, FLAMMABLE, N.O.S. with flash-point above 60°C, at or above its flash-point (CREOSOTE OIL)	3	F2	III	3+N1+F	C	2	2	2	10	95		2	yes	T2 **(12)**	II B	yes	PP, EX, A	0	7; 17
3256	ELEVATED TEMPERATURE LIQUID, FLAMMABLE, N.O.S. with flash-point above 60°C, at or above its flash-point (Low QI Pitch)	3	F2	III	3+N2+CMR+S	N	3	1	4		95	1.1 - 1.3	3	yes	T2 **(12)**	II B **(2)**	yes	PP, EP, EX, TOX, A	0	7; 17
3256	ELEVATED TEMPERATURE LIQUID, FLAMMABLE, N.O.S. with flash-point above 60°C, at or above its flash-point (maximum transport temperature: T ≤ 80°C)	3	F2	III	3+(N1, N2, N3, CMR, F or S)	N	3	2	4		95		3	yes	T4 **(3)**	II B **(4)**	yes	PP, EX, A	0	7; 17; 22; 27

UN No. or substance identification No.	Name and description	Class	Classification code	Packing group	Danger labels	Type of tank vessel	Cargo tank design	Cargo tank type	Cargo tank equipment	Opening pressure of the pressure relief valve / high-velocity vent valve in kPa	Maximum degree of filling in %	Relative density at 20°C	Type of sampling device	Pump-room below deck permitted	Temperature class	Explosion group	Anti-explosion protection required	Equipment required	Number of cones/blue lights	Additional requirements / Remarks
(1)	(2)	3(a)	3(b)	(4)	(5)	(6)	(7)	(8)	(9)	(10)	(11)	(12)	(13)	(14)	(15)	(16)	(17)	(18)	(19)	(20)
3256	ELEVATED TEMPERATURE LIQUID, FLAMMABLE, N.O.S. with flash-point above 60°C, at or above its flash-point (maximum transport temperature: 80°C < T ≤ 115°C)	3	F2	III	3+(N1, N2, N3, CMR, F or S)	N	3	1	4		95		3	yes	T4 **(3)**	II B **(4)**	yes	PP, EX, A	0	7; 17; 22; 25; 27
3256	ELEVATED TEMPERATURE LIQUID, FLAMMABLE, N.O.S. with flash-point above 60°C, at or above its flash-point (maximum transport temperature: T > 115°C)	3	F2	III	3+(N1, N2, N3, CMR, F or S)	N	3	1	4		95		3	yes	T4 **(3)**	II B **(4)**	yes	PP, EX, A	0	7; 17; 22; 27
3256	ELEVATED TEMPERATURE LIQUID, FLAMMABLE, N.O.S. with flash-point above 60°C, at or above its flash-point (maximum transport temperature: T ≤ 80°C)	3	F2	III	3+(N1, N2, N3, CMR, F or S)	N	3	2	4		95		3	yes	T4 **(3)**	II B **(4)** (II B3)	yes	PP, EX, A	0	7; 17; 22; 27; 44
3256	ELEVATED TEMPERATURE LIQUID, FLAMMABLE, N.O.S. with flash-point above 60°C, at or above its flash-point (maximum transport temperature: 80°C < T ≤ 115°C)	3	F2	III	3+(N1, N2, N3, CMR, F or S)	N	3	1	4		95		3	yes	T4 **(3)**	II B **(4)** (II B3)	yes	PP, EX, A	0	7; 17; 22; 25; 27; 44
3256	ELEVATED TEMPERATURE LIQUID, FLAMMABLE, N.O.S. with flash-point above 60°C, at or above its flash-point (maximum transport temperature: T > 115°C)	3	F2	III	3+(N1, N2, N3, CMR, F or S)	N	3	1	4		95		3	yes	T4 **(3)**	II B **(4)** (II B3)	yes	PP, EX, A	0	7; 17; 22; 27; 44
3257	ELEVATED TEMPERATURE LIQUID, N.O.S. at or above 100°C and below its flash-point (including molten metals, molten salts, etc.)	9	M9	III	9+(N1, N2, N3, CMR, F or S)	N	4	1	4		95		3	yes			no	PP	0	7; 17; 20: +115°C; 22; 24; 25; 27

UN No. or substance identification No.	Name and description	Class	Classification code	Packing group	Danger labels	Type of tank vessel	Cargo tank design	Cargo tank type	Cargo tank equipment	Opening pressure of the pressure relief valve / high-velocity vent valve in kPa	Maximum degree of filling in %	Relative density at 20°C	Type of sampling device	Pump-room below deck permitted	Temperature class	Explosion group	Anti-explosion protection required	Equipment required	Number of cones/blue lights	Additional requirements / Remarks
(1)	(2)	3(a)	3(b)	(4)	(5)	(6)	(7)	(8)	(9)	(10)	(11)	(12)	(13)	(14)	(15)	(16)	(17)	(18)	(19)	(20)
3257	ELEVATED TEMPERATURE LIQUID, N.O.S. at or above 100°C and below its flash-point (including molten metals, molten salts, etc.)	9	M9	III	9+(N1, N2, N3, CMR, F or S)	N	4	1	4		95		3	yes			no	PP	0	7; 17; 20: +225°C; 22; 24; 27
3259	AMINES, SOLID, CORROSIVE, N.O.S. (MONOALKYL-(C12 to C18)- AMINE ACETATE, MOLTEN)	8	C8	III	8	N	4	3	2		95	0.87	3	yes			no	PP, EP	0	7; 17; 34
3264	CORROSIVE LIQUID, ACIDIC, INORGANIC, N.O.S. (AQUEOUS SOLUTION OF PHOSPHORIC ACID AND CITRIC ACID)	8	C1	I	8	N	2	3		10	97		3	yes			no	PP, EP	0	34
3264	CORROSIVE LIQUID, ACIDIC, INORGANIC, N.O.S. (AQUEOUS SOLUTION OF PHOSPHORIC ACID AND CITRIC ACID)	8	C1	II	8	N	4	3			97		3	yes			no	PP, EP	0	34
3264	CORROSIVE LIQUID, ACIDIC, INORGANIC, N.O.S. (AQUEOUS SOLUTION OF PHOSPHORIC ACID AND CITRIC ACID)	8	C1	III	8	N	4	3			97		3	yes			no	PP, EP	0	34
3264	CORROSIVE LIQUID, ACIDIC, INORGANIC, N.O.S. vp50 > 12.5 kPa	8	C1	I	8+(N1, N2, N3, CMR, F or S)	N	2	3		10	97		3	yes			no	PP, EP	0	22; 27; 34
3264	CORROSIVE LIQUID, ACIDIC, INORGANIC, N.O.S. vp50 ≤ 12.5 kPa	8	C1	I	8+(N1, N2, N3, CMR, F or S)	N	4	3			97		3	yes			no	PP, EP	0	22; 27; 34
3264	CORROSIVE LIQUID, ACIDIC, INORGANIC, N.O.S. vp50 ≤ 12.5 kPa	8	C1	II	8+(N1, N2, N3, CMR, F or S)	N	4	3			97		3	yes			no	PP, EP	0	22; 27; 34
3264	CORROSIVE LIQUID, ACIDIC, INORGANIC, N.O.S. vp50 > 12.5 kPa	8	C1	II	8+(N1, N2, N3, CMR, F or S)	N	2	3		10	97		3	yes			no	PP, EP	0	22; 27; 34

UN No. or substance identification No.	Name and description	Class	Classification code	Packing group	Danger labels	Type of tank vessel	Cargo tank design	Cargo tank type	Cargo tank equipment	Opening pressure of the pressure relief valve / high-velocity vent valve in kPa	Maximum degree of filling in %	Relative density at 20°C	Type of sampling device	Pump-room below deck permitted	Temperature class	Explosion group	Anti-explosion protection required	Equipment required	Number of cones/blue lights	Additional requirements / Remarks
(1)	(2)	3(a)	3(b)	(4)	(5)	(6)	(7)	(8)	(9)	(10)	(11)	(12)	(13)	(14)	(15)	(16)	(17)	(18)	(19)	(20)
3264	CORROSIVE LIQUID, ACIDIC, INORGANIC, N.O.S. vp50 ≥ 6 kPa	8	C1	III	8+(N1, N2, N3, CMR, F or S)	N	4	3			97		3	yes			no	PP, EP	0	22; 27; 34
3264	CORROSIVE LIQUID, ACIDIC, INORGANIC, N.O.S. Corrosive to steel or aluminium corrosiveness ≥6.25 mm/year	8	C1	III	8+(N1, N2, N3, CMR, F or S)	N	4	3			97		3	yes			no	PP, EP	0	22; 27; 34
3264	CORROSIVE LIQUID, ACIDIC, INORGANIC, N.O.S. Melting point > 0°C and transported at elevated temperatures	8	C1	III	8+(N1, N2, N3, CMR, F or S)	N	4	3			97		3	yes			no	PP, EP	0	22; 27; 34; 38
3265	CORROSIVE LIQUID, ACIDIC, ORGANIC, N.O.S. vp50>12.5kPa	8	C3	I	8+(N1, N2, N3, CMR, F or S)	N	2	3		10	97		3	yes			no	PP, EP	0	22; 27; 34
3265	CORROSIVE LIQUID, ACIDIC, ORGANIC, N.O.S. vp50≤12.5kPa	8	C3	I	8+(N1, N2, N3, CMR, F or S)	N	4	3			97		3	yes			no	PP, EP	0	22; 27; 34
3265	CORROSIVE LIQUID, ACIDIC, ORGANIC, N.O.S. vp50>12.5kPa	8	C3	II	8+(N1, N2, N3, CMR, F or S)	N	2	3		10	97		3	yes			no	PP, EP	0	22; 27; 34
3265	CORROSIVE LIQUID, ACIDIC, ORGANIC, N.O.S. vp50≤12.5kPa	8	C3	II	8+(N1, N2, N3, CMR, F or S)	N	4	3			97		3	yes			no	PP, EP	0	22; 27; 34
3265	CORROSIVE LIQUID, ACIDIC, ORGANIC, N.O.S. vp50≥6kPa	8	C3	III	8+(N1, N2, N3, CMR, F or S)	N	4	3			97		3	yes			no	PP, EP	0	22; 27; 34
3265	CORROSIVE LIQUID, ACIDIC, ORGANIC, N.O.S. Corrosive to steel or aluminium corrosiveness ≥6.25 mm/year	8	C3	III	8+(N1, N2, N3, CMR, F or S)	N	4	3			97		3	yes			no	PP, EP	0	22; 27; 34
3265	CORROSIVE LIQUID, ACIDIC, ORGANIC, N.O.S. Melting point > 0°C and transported at elevated temperatures	8	C3	III	8+(N1, N2, N3, CMR, F or S)	N	4	3			97		3	yes			no	PP, EP	0	22; 27; 34; 38
3266	CORROSIVE LIQUID, BASIC, INORGANIC, N.O.S. vp50>12.5kPa	8	C5	I	8+(N1, N2, N3, CMR, F or S)	N	2	3		10	97		3	yes			no	PP, EP	0	22; 27; 34
3266	CORROSIVE LIQUID, BASIC, INORGANIC, N.O.S. vp50≤12.5kPa	8	C5	I	8+(N1, N2, N3, CMR, F or S)	N	4	2			97		3	yes			no	PP, EP	0	22; 27; 34

UN No. or substance identification No.	Name and description	Class	Classification code	Packing group	Danger labels	Type of tank vessel	Cargo tank design	Cargo tank type	Cargo tank equipment	Opening pressure of the pressure relief valve / high-velocity vent valve in kPa	Maximum degree of filling in %	Relative density at 20°C	Type of sampling device	Pump-room below deck permitted	Temperature class	Explosion group	Anti-explosion protection required	Equipment required	Number of cones/blue lights	Additional requirements / Remarks
(1)	(2)	3(a)	3(b)	(4)	(5)	(6)	(7)	(8)	(9)	(10)	(11)	(12)	(13)	(14)	(15)	(16)	(17)	(18)	(19)	(20)
3266	CORROSIVE LIQUID, BASIC, INORGANIC, N.O.S. vp50>12.5kPa	8	C5	II	8+(N1, N2, N3, CMR, F or S)	N	2	3		10	97		3	yes			no	PP, EP	0	22; 27; 34
3266	CORROSIVE LIQUID, BASIC, INORGANIC, N.O.S. vp50≤12.5kPa	8	C5	II	8+(N1, N2, N3, CMR, F or S)	N	4	2			97		3	yes			no	PP, EP	0	22; 27; 34
3266	CORROSIVE LIQUID, BASIC, INORGANIC, N.O.S.	8	C5	III	8+(N1, N2, N3, CMR, F or S)	N	4	2			97		3	yes			no	PP, EP	0	22; 27; 34
3267	CORROSIVE LIQUID, BASIC, ORGANIC, N.O.S. vp50>12.5kPa	8	C7	I	8+(N1, N2, N3, CMR, F or S)	N	2	3		10	97		3	yes			no	PP, EP	0	22; 27; 34
3267	CORROSIVE LIQUID, BASIC, ORGANIC, N.O.S. vp50≤12.5kPa	8	C7	I	8+(N1, N2, N3, CMR, F or S)	N	4	2			97		3	yes			no	PP, EP	0	22; 27; 34
3267	CORROSIVE LIQUID, BASIC, ORGANIC, N.O.S. vp50>12.5kPa	8	C7	II	8+(N1, N2, N3, CMR, F or S)	N	2	3		10	97		3	yes			no	PP, EP	0	22; 27; 34
3267	CORROSIVE LIQUID, BASIC, ORGANIC, N.O.S. vp50≤12.5kPa	8	C7	II	8+(N1, N2, N3, CMR, F or S)	N	4	2			97		3	yes			no	PP, EP	0	22; 27; 34
3267	CORROSIVE LIQUID, BASIC, ORGANIC, N.O.S.	8	C7	III	8+(N1, N2, N3, CMR, F or S)	N	4	2			97		3	yes			no	PP, EP	0	22; 27; 34
3271	ETHERS, N.O.S. (tert- AMYL- METHYL ETHER)	3	F1	II	3+N1	C	2	2	3	50	95	0.77	2	yes	T2 **(12)**	II B **(4)**	yes	PP, EX, A	1	
3271	ETHERS, N.O.S. Flash point < 23°C with 175kPa≤vp50<300kPa	3	F1	II	3+(N1, N2, N3, CMR, F or S)	N	1	1			95		1	yes	T4 **(3)**	II B **(4)**	yes	PP, EX, A	1	14; 22; 27
3271	ETHERS, N.O.S. Flash point < 23°C with 175kPa≤vp50<300kPa	3	F1	II	3+(N1, N2, N3, CMR, F or S)	N	2	2	1	50	95		3	yes	T4 **(3)**	II B **(4)**	yes	PP, EX, A	1	14; 22; 27
3271	ETHERS, N.O.S. Flash point < 23°C with 110kPa≤vp50<175kPa	3	F1	II	3+(N1, N2, N3, CMR, F or S)	N	2	2		50	97		3	yes	T4 **(3)**	II B **(4)**	yes	PP, EX, A	1	14; 22; 27
3271	ETHERS, N.O.S. Flash point < 23°C with 110kPa≤vp50<150kPa	3	F1	II	3+(N1, N2, N3, CMR, F or S)	N	2	2	3	10	97		3	yes	T4 **(3)**	II B **(4)**	yes	PP, EX, A	1	14; 22; 27

UN No. or substance identification No.	Name and description	Class	Classification code	Packing group	Danger labels	Type of tank vessel	Cargo tank design	Cargo tank type	Cargo tank equipment	Opening pressure of the pressure relief valve / high-velocity vent valve in kPa	Maximum degree of filling in %	Relative density at 20°C	Type of sampling device	Pump-room below deck permitted	Temperature class	Explosion group	Anti-explosion protection required	Equipment required	Number of cones/blue lights	Additional requirements / Remarks
(1)	(2)	3(a)	3(b)	(4)	(5)	(6)	(7)	(8)	(9)	(10)	(11)	(12)	(13)	(14)	(15)	(16)	(17)	(18)	(19)	(20)
3271	ETHERS, N.O.S. Flash point < 23°C with vp50<110kPa	3	F1	II	3+(N1, N2, N3, CMR, F or S)	N	2	2		10	97		3	yes	T4 **(3)**	II B **(4)**	yes	PP, EX, A	1	14; 22; 27
3271	ETHERS, N.O.S. Flash point ≥23°C but ≤ 60°C	3	F1	III	3+(N1, N2, N3, CMR, F or S)	N	3	2			97		3	yes	T4 **(3)**	II B **(4)**	yes	PP, EX, A	0	14; 22; 27
3271	ETHERS, N.O.S. Flash point < 23°C with 175kPa≤vp50<300kPa	3	F1	II	3+(N1, N2, N3, CMR, F or S)	N	1	1			95		1	yes	T4 **(3)**	II B **(4)** (II B3)	yes	PP, EX, A	1	14; 22; 27; 44
3271	ETHERS, N.O.S. Flash point < 23°C with 175kPa≤vp50<300kPa	3	F1	II	3+(N1, N2, N3, CMR, F or S)	N	2	2	1	50	95		3	yes	T4 **(3)**	II B **(4)** (II B3)	yes	PP, EX, A	1	14; 22; 27; 44
3271	ETHERS, N.O.S. Flash point < 23°C with 110kPa≤vp50<175kPa	3	F1	II	3+(N1, N2, N3, CMR, F or S)	N	2	2		50	97		3	yes	T4 **(3)**	II B **(4)** (II B3)	yes	PP, EX, A	1	14; 22; 27; 44
3271	ETHERS, N.O.S. Flash point < 23°C with 110kPa≤vp50<150kPa	3	F1	II	3+(N1, N2, N3, CMR, F or S)	N	2	2	3	10	97		3	yes	T4 **(3)**	II B **(4)** (II B3)	yes	PP, EX, A	1	14; 22; 27; 44
3271	ETHERS, N.O.S. Flash point < 23°C with vp50<110kPa	3	F1	II	3+(N1, N2, N3, CMR, F or S)	N	2	2		10	97		3	yes	T4 **(3)**	II B **(4)** (II B3)	yes	PP, EX, A	1	14; 22; 27; 44
3271	ETHERS, N.O.S. Flash point ≥23°C but ≤ 60°C	3	F1	III	3+(N1, N2, N3, CMR, F or S)	N	3	2			97		3	yes	T4 **(3)**	II B **(4)** (II B3)	yes	PP, EX, A	0	14; 22; 27; 44
3272	ESTERS, N.O.S. Flash point < 23°C with 175kPa≤vp50<300kPa	3	F1	II	3+(N1, N2, N3, CMR, F or S)	N	1	1			95		1	yes	T2 **(12)**	II B **(4)**	yes	PP, EX, A	1	14; 22; 27
3272	ESTERS, N.O.S. Flash point < 23°C with 175kPa≤vp50<300kPa	3	F1	II	3+(N1, N2, N3, CMR, F or S)	N	2	2	1	50	95		3	yes	T2 **(12)**	II B **(4)**	yes	PP, EX, A	1	14; 22; 27

UN No. or substance identification No.	Name and description	Class	Classification code	Packing group	Danger labels	Type of tank vessel	Cargo tank design	Cargo tank type	Cargo tank equipment	Opening pressure of the pressure relief valve / high-velocity vent valve in kPa	Maximum degree of filling in %	Relative density at 20°C	Type of sampling device	Pump-room below deck permitted	Temperature class	Explosion group	Anti-explosion protection required	Equipment required	Number of cones/blue lights	Additional requirements / Remarks
(1)	(2)	3(a)	3(b)	(4)	(5)	(6)	(7)	(8)	(9)	(10)	(11)	(12)	(13)	(14)	(15)	(16)	(17)	(18)	(19)	(20)
3272	ESTERS, N.O.S. Flash point < 23°C with 110kPa≤vp50<175kPa	3	F1	II	3+(N1, N2, N3, CMR, F or S)	N	2	2		50	97		3	yes	T2 **(12)**	II B **(4)**	yes	PP, EX, A	1	14; 22; 27
3272	ESTERS, N.O.S. Flash point < 23°C with 110kPa≤vp50<150kPa	3	F1	II	3+(N1, N2, N3, CMR, F or S)	N	2	2	3	10	97		3	yes	T2 **(12)**	II B **(4)**	yes	PP, EX, A	1	14; 22; 27
3272	ESTERS, N.O.S. Flash point < 23°C with vp50<110kPa	3	F1	II	3+(N1, N2, N3, CMR, F or S)	N	2	2		10	97		3	yes	T2 **(12)**	II B **(4)**	yes	PP, EX, A	1	14; 22; 27
3272	ESTERS, N.O.S. Flash point ≥23°C but ≤ 60°C	3	F1	III	3+(N1, N2, N3, CMR, F or S)	N	3	2			97		3	yes	T4 **(3)**	II B **(4)**	yes	PP, EX, A	0	14; 22; 27
3272	ESTERS, N.O.S. Flash point < 23°C with 175kPa≤vp50<300kPa	3	F1	II	3+(N1, N2, N3, CMR, F or S)	N	1	1			95		1	yes	T2 **(12)**	II B **(4)** (II B3)	yes	PP, EX, A	1	14; 22; 27; 44
3272	ESTERS, N.O.S. Flash point < 23°C with 175kPa≤vp50<300kPa	3	F1	II	3+(N1, N2, N3, CMR, F or S)	N	2	2	1	50	95		3	yes	T2 **(12)**	II B **(4)** (II B3)	yes	PP, EX, A	1	14; 22; 27; 44
3272	ESTERS, N.O.S. Flash point < 23°C with 110kPa≤vp50<175kPa	3	F1	II	3+(N1, N2, N3, CMR, F or S)	N	2	2		50	97		3	yes	T2 **(12)**	II B **(4)** (II B3)	yes	PP, EX, A	1	14; 22; 27; 44
3272	ESTERS, N.O.S. Flash point < 23°C with 110kPa≤vp50<150kPa	3	F1	II	3+(N1, N2, N3, CMR, F or S)	N	2	2	3	10	97		3	yes	T2 **(12)**	II B **(4)** (II B3)	yes	PP, EX, A	1	14; 22; 27; 44
3272	ESTERS, N.O.S. Flash point < 23°C with vp50<110kPa	3	F1	II	3+(N1, N2, N3, CMR, F or S)	N	2	2		10	97		3	yes	T2 **(12)**	II B **(4)** (II B3)	yes	PP, EX, A	1	14; 22; 27; 44
3272	ESTERS, N.O.S. Flash point ≥23°C but ≤ 60°C	3	F1	III	3+(N1, N2, N3, CMR, F or S)	N	3	2			97		3	yes	T4 **(3)**	II B **(4)** (II B3)	yes	PP, EX, A	0	14; 22; 27; 44

UN No. or substance identification No.	Name and description	Class	Classification code	Packing group	Danger labels	Type of tank vessel	Cargo tank design	Cargo tank type	Cargo tank equipment	Opening pressure of the pressure relief valve / high-velocity vent valve in kPa	Maximum degree of filling in %	Relative density at 20°C	Type of sampling device	Pump-room below deck permitted	Temperature class	Explosion group	Anti-explosion protection required	Equipment required	Number of cones/blue lights	Additional requirements / Remarks
(1)	(2)	3(a)	3(b)	(4)	(5)	(6)	(7)	(8)	(9)	(10)	(11)	(12)	(13)	(14)	(15)	(16)	(17)	(18)	(19)	(20)
3276	NITRILES, TOXIC, LIQUID, N.O.S. (2-METHYLGLUTARONITRILE)	6.1	T1	II	6.1	C	2	2		10	95	0.95	2	no	T4 **(3)**		no	PP, EP, TOX, A	2	
3286	FLAMMABLE LIQUID, TOXIC, CORROSIVE, N.O.S. Initial boiling point ≤ 60°C	3	FTC	I	3+6.1+8+(N1, N2, N3, CMR, F or S)	C	1	1			95		1	no	T4 **(3)**	II B **(4)**	yes	PP, EP, EX, TOX, A	2	22; 27
3286	FLAMMABLE LIQUID, TOXIC, CORROSIVE, N.O.S. 60°C <Initial boiling point ≤ 85°C	3	FTC	I	3+6.1+8+ (N1, N2, N3, CMR, F or S)	C	2	2	3	50	95		2	no	T4 **(3)**	II B **(4)**	yes	PP, EP, EX, TOX, A	2	22; 23; 27
3286	FLAMMABLE LIQUID, TOXIC, CORROSIVE, N.O.S. 85°C <Initial boiling point ≤ 115°C	3	FTC	I	3+6.1+8+ (N1, N2, N3, CMR, F or S)	C	2	2		50	95		2	no	T4 **(3)**	II B **(4)**	yes	PP, EP, EX, TOX, A	2	22; 27
3286	FLAMMABLE LIQUID, TOXIC, CORROSIVE, N.O.S. 115°C <Initial boiling point	3	FTC	I	3+6.1+8+ (N1, N2, N3, CMR, F or S)	C	2	2		35	95		2	no	T4 **(3)**	II B **(4)**	yes	PP, EP, EX, TOX, A	2	22; 27
3286	FLAMMABLE LIQUID, TOXIC, CORROSIVE, N.O.S. 60°C <Initial boiling point ≤ 85°C	3	FTC	II	3+6.1+8+ (N1, N2, N3, CMR, F or S)	C	2	2	3	50	95		2	no	T4 **(3)**	II B **(4)**	yes	PP, EP, EX, TOX, A	2	22; 23; 27
3286	FLAMMABLE LIQUID, TOXIC, CORROSIVE, N.O.S. 85°C <Initial boiling point ≤ 115°C	3	FTC	II	3+6.1+8+ (N1, N2, N3, CMR, F or S)	C	2	2		50	95		2	no	T4 **(3)**	II B **(4)**	yes	PP, EP, EX, TOX, A	2	22; 27
3286	FLAMMABLE LIQUID, TOXIC, CORROSIVE, N.O.S. 115°C <Initial boiling point	3	FTC	II	3+6.1+8+ (N1, N2, N3, CMR, F or S)	C	2	2		35	95		2	no	T4 **(3)**	II B **(4)**	yes	PP, EP, EX, TOX, A	2	22; 27
3286	FLAMMABLE LIQUID, TOXIC, CORROSIVE, N.O.S. Initial boiling point ≤ 60°C	3	FTC	I	3+6.1+8+(N1, N2, N3, CMR, F or S)	C	1	1			95		1	no	T4 **(3)**	II B **(4)** (II B3)	yes	PP, EP, EX, TOX, A	2	22; 27; 44

UN No. or substance identification No.	Name and description	Class	Classification code	Packing group	Danger labels	Type of tank vessel	Cargo tank design	Cargo tank type	Cargo tank equipment	Opening pressure of the pressure relief valve / high-velocity vent valve in kPa	Maximum degree of filling in %	Relative density at 20°C	Type of sampling device	Pump-room below deck permitted	Temperature class	Explosion group	Anti-explosion protection required	Equipment required	Number of cones/blue lights	Additional requirements / Remarks
(1)	(2)	3(a)	3(b)	(4)	(5)	(6)	(7)	(8)	(9)	(10)	(11)	(12)	(13)	(14)	(15)	(16)	(17)	(18)	(19)	(20)
3286	FLAMMABLE LIQUID, TOXIC, CORROSIVE, N.O.S. 60°C <Initial boiling point ≤ 85°C	3	FTC	I	3+6.1+8+ (N1, N2, N3, CMR, F or S)	C	2	2	3	50	95		2	no	T4 **(3)**	II B **(4)** (II B3)	yes	PP, EP, EX, TOX, A	2	22; 23; 27; 44
3286	FLAMMABLE LIQUID, TOXIC, CORROSIVE, N.O.S. 85°C <Initial boiling point ≤ 115°C	3	FTC	I	3+6.1+8+ (N1, N2, N3, CMR, F or S)	C	2	2		50	95		2	no	T4 **(3)**	II B **(4)** (II B3)	yes	PP, EP, EX, TOX, A	2	22; 27; 44
3286	FLAMMABLE LIQUID, TOXIC, CORROSIVE, N.O.S. 115°C <Initial boiling point	3	FTC	I	3+6.1+8+ (N1, N2, N3, CMR, F or S)	C	2	2		35	95		2	no	T4 **(3)**	II B **(4)** (II B3)	yes	PP, EP, EX, TOX, A	2	22; 27; 44
3286	FLAMMABLE LIQUID, TOXIC, CORROSIVE, N.O.S. 60°C <Initial boiling point ≤ 85°C	3	FTC	II	3+6.1+8+ (N1, N2, N3, CMR, F or S)	C	2	2	3	50	95		2	no	T4 **(3)**	II B **(4)** (II B3)	yes	PP, EP, EX, TOX, A	2	22; 23; 27; 44
3286	FLAMMABLE LIQUID, TOXIC, CORROSIVE, N.O.S. 85°C <Initial boiling point ≤ 115°C	3	FTC	II	3+6.1+8+ (N1, N2, N3, CMR, F or S)	C	2	2		50	95		2	no	T4 **(3)**	II B **(4)** (II B3)	yes	PP, EP, EX, TOX, A	2	22; 27; 44
3286	FLAMMABLE LIQUID, TOXIC, CORROSIVE, N.O.S. 115°C <Initial boiling point	3	FTC	II	3+6.1+8+ (N1, N2, N3, CMR, F or S)	C	2	2		35	95		2	no	T4 **(3)**	II B **(4)** (II B3)	yes	PP, EP, EX, TOX, A	2	22; 27; 44
3287	TOXIC LIQUID, INORGANIC, N.O.S. (SODIUM DICHROMATE SOLUTION)	6.1	T4	III	6.1+CMR	C	2	2		30	95	1.68	2	no			no	PP, EP, TOX, A	0	
3287	TOXIC LIQUID, INORGANIC, N.O.S. 60°C <Initial boiling point ≤ 85°C	6.1	T4	I	6.1+(N1, N2, N3, CMR, F or S)	C	2	2	3	50	95		1	no			no	PP, EP, TOX, A	2	22; 23; 27
3287	TOXIC LIQUID, INORGANIC, N.O.S. 85°C <Initial boiling point ≤ 115°C	6.1	T4	I	6.1+(N1, N2, N3, CMR, F or S)	C	2	2		50	95		1	no			no	PP, EP, TOX, A	2	22; 27
3287	TOXIC LIQUID, INORGANIC, N.O.S. 115°C <Initial boiling point	6.1	T4	I	6.1+(N1, N2, N3, CMR, F or S)	C	2	2		35	95		1	no			no	PP, EP, TOX, A	2	22; 27

UN No. or substance identification No.	Name and description	Class	Classification code	Packing group	Danger labels	Type of tank vessel	Cargo tank design	Cargo tank type	Cargo tank equipment	Opening pressure of the pressure relief valve / high-velocity vent valve in kPa	Maximum degree of filling in %	Relative density at 20°C	Type of sampling device	Pump-room below deck permitted	Temperature class	Explosion group	Anti-explosion protection required	Equipment required	Number of cones/blue lights	Additional requirements / Remarks
(1)	(2)	3(a)	3(b)	(4)	(5)	(6)	(7)	(8)	(9)	(10)	(11)	(12)	(13)	(14)	(15)	(16)	(17)	(18)	(19)	(20)
3287	TOXIC LIQUID, INORGANIC, N.O.S. 60°C <Initial boiling point ≤ 85°C	6.1	T4	II	6.1+(N1, N2, N3, CMR, F or S)	C	2	2	3	50	95		2	no			no	PP, EP, TOX, A	2	22; 23; 27
3287	TOXIC LIQUID, INORGANIC, N.O.S. 85°C <Initial boiling point ≤ 115°C	6.1	T4	II	6.1+(N1, N2, N3, CMR, F or S)	C	2	2		50	95		2	no			no	PP, EP, TOX, A	2	22; 27
3287	TOXIC LIQUID, INORGANIC, N.O.S. 115°C <Initial boiling point	6.1	T4	II	6.1+(N1, N2, N3, CMR, F or S)	C	2	2		35	95		2	no			no	PP, EP, TOX, A	2	22; 27
3287	TOXIC LIQUID, INORGANIC, N.O.S. 60°C <Initial boiling point ≤ 85°C	6.1	T4	III	6.1+(N1, N2, N3, CMR, F or S)	C	2	2	3	50	95		2	no			no	PP, EP, TOX, A	0	22; 23; 27
3287	TOXIC LIQUID, INORGANIC, N.O.S. 85°C <Initial boiling point ≤ 115°C	6.1	T4	III	6.1+(N1, N2, N3, CMR, F or S)	C	2	2		50	95		2	no			no	PP, EP, TOX, A	0	22; 27
3287	TOXIC LIQUID, INORGANIC, N.O.S. 115°C <Initial boiling point	6.1	T4	III	6.1+(N1, N2, N3, CMR, F or S)	C	2	2		35	95		2	no			no	PP, EP, TOX, A	0	22; 27
3289	TOXIC LIQUID, CORROSIVE, INORGANIC, N.O.S. BOILING POINT > 115°C	6.1	TC3	I	6.1+8+(N1, N2, N3, CMR, F or S)	C	2	2		35	95		1	no			no	PP, EP, TOX, A	2	22; 27
3289	TOXIC LIQUID, CORROSIVE, INORGANIC, N.O.S. BOILING POINT > 115°C	6.1	TC3	II	6.1+8+(N1, N2, N3, CMR, F or S)	C	2	2		35	95		2	no			no	PP, EP, TOX, A	2	22; 27
3295	HYDROCARBONS, LIQUID, N.O.S. CONTAINING ISOPRENE AND PENTADIENE, STABILIZED	3	F1	I	3+unst.+N2+CMR	C	2	2	3	50	95	0.678	1	yes	T4 **(3)**	II B **(4)**	yes	PP, EP, EX, TOX, A	1	3
3295	HYDROCARBONS, LIQUID, N.O.S. (1-OCTEN)	3	F1	II	3+N2+F	N	2	3		10	97	0.71	3	yes	T3	II B **(4)**	yes	PP, EX, A	1	14
3295	HYDROCARBONS, LIQUID, N.O.S. (POLYCYCLIC AROMATIC HYDROCARBONS MIXTURE)	3	F1	III	3+CMR+F	N	2	3	3	10	97	1.08	3	yes	T1 **(12)**	II A	yes	PP, EP, EX, TOX, A	0	14

UN No. or substance identification No.	Name and description	Class	Classification code	Packing group	Danger labels	Type of tank vessel	Cargo tank design	Cargo tank type	Cargo tank equipment	Opening pressure of the pressure relief valve / high-velocity vent valve in kPa	Maximum degree of filling in %	Relative density at 20°C	Type of sampling device	Pump-room below deck permitted	Temperature class	Explosion group	Anti-explosion protection required	Equipment required	Number of cones/blue lights	Additional requirements / Remarks
(1)	(2)	3(a)	3(b)	(4)	(5)	(6)	(7)	(8)	(9)	(10)	(11)	(12)	(13)	(14)	(15)	(16)	(17)	(18)	(19)	(20)
3295	HYDROCARBONS, LIQUID, N.O.S. WITH MORE THAN 10% BENZENE INITIAL BOILING POINT ≤ 60°C	3	F1	I	3+CMR+ (N1, N2, N3)	C	1	1			95		1	yes	T4 **(3)**	II B **(4)**	yes	PP, EP, EX, TOX, A	1	27
3295	HYDROCARBONS, LIQUID, N.O.S. WITH MORE THAN 10% BENZENE INITIAL BOILING POINT ≤ 60°C	3	F1	II	3+CMR+ (N1, N2, N3)	C	1	1			95		1	yes	T4 **(3)**	II B **(4)**	yes	PP, EP, EX, TOX, A	1	27
3295	HYDROCARBONS, LIQUID, N.O.S. WITH MORE THAN 10% BENZENE 60°C < INITIAL BOILING POINT ≤ 85°C	3	F1	II	3+CMR+ (N1, N2, N3)	C	2	2	3	50	95		2	yes	T4 **(3)**	II B **(4)**	yes	PP, EP, EX, TOX, A	1	23; 27
3295	HYDROCARBONS, LIQUID, N.O.S. WITH MORE THAN 10% BENZENE 85°C < INITIAL BOILING POINT ≤ 115°C	3	F1	II	3+CMR+ (N1, N2, N3)	C	2	2		50	95		2	yes	T4 **(3)**	II B **(4)**	yes	PP, EP, EX, TOX, A	1	27
3295	HYDROCARBONS, LIQUID, N.O.S. WITH MORE THAN 10% BENZENE INITIAL BOILING POINT > 115°C	3	F1	II	3+CMR+ (N1, N2, N3)	C	2	2		35	95		2	yes	T4 **(3)**	II B **(4)**	yes	PP, EP, EX, TOX, A	1	27
3295	HYDROCARBONS, LIQUID, N.O.S. WITH MORE THAN 10% BENZENE INITIAL BOILING POINT ≤ 60°C	3	F1	III	3+CMR+ (N1, N2, N3)	C	1	1			95		1	yes	T4 **(3)**	II B **(4)**	yes	PP, EP, EX, TOX, A	1	27
3295	HYDROCARBONS, LIQUID, N.O.S. WITH MORE THAN 10% BENZENE 60°C < INITIAL BOILING POINT ≤ 85°C	3	F1	III	3+CMR+ (N1, N2, N3)	C	2	2	3	50	95		2	yes	T4 **(3)**	II B **(4)**	yes	PP, EP, EX, TOX, A	0	23; 27
3295	HYDROCARBONS, LIQUID, N.O.S. WITH MORE THAN 10% BENZENE 85°C < INITIAL BOILING POINT ≤ 115°C	3	F1	III	3+CMR+ (N1, N2, N3)	C	2	2		50	95		2	yes	T4 **(3)**	II B **(4)**	yes	PP, EP, EX, TOX, A	0	27
3295	HYDROCARBONS, LIQUID, N.O.S. WITH MORE THAN 10% BENZENE INITIAL BOILING POINT > 115°C	3	F1	III	3+CMR+ (N1, N2, N3)	C	2	2		35	95		2	yes	T4 **(3)**	II B **(4)**	yes	PP, EP, EX, TOX, A	0	27

UN No. or substance identification No.	Name and description	Class	Classification code	Packing group	Danger labels	Type of tank vessel	Cargo tank design	Cargo tank type	Cargo tank equipment	Opening pressure of the pressure relief valve / high-velocity vent valve in kPa	Maximum degree of filling in %	Relative density at 20°C	Type of sampling device	Pump-room below deck permitted	Temperature class	Explosion group	Anti-explosion protection required	Equipment required	Number of cones/blue lights	Additional requirements / Remarks
(1)	(2)	3(a)	3(b)	(4)	(5)	(6)	(7)	(8)	(9)	(10)	(11)	(12)	(13)	(14)	(15)	(16)	(17)	(18)	(19)	(20)
3295	HYDROCARBONS, LIQUID, N.O.S. WITH MORE THAN 10% BENZENE INITIAL BOILING POINT ≤ 60°C	3	F1	I	3+CMR+ (N1, N2, N3)	C	1	1			95		1	yes	T4 **(3)**	II B **(4)** (II B3)	yes	PP, EP, EX, TOX, A	1	27; 44
3295	HYDROCARBONS, LIQUID, N.O.S. WITH MORE THAN 10% BENZENE INITIAL BOILING POINT ≤ 60°C	3	F1	II	3+CMR+ (N1, N2, N3)	C	1	1			95		1	yes	T4 **(3)**	II B **(4)** (II B3)	yes	PP, EP, EX, TOX, A	1	27; 44
3295	HYDROCARBONS, LIQUID, N.O.S. WITH MORE THAN 10% BENZENE 60°C < INITIAL BOILING POINT ≤ 85°C	3	F1	II	3+CMR+ (N1, N2, N3)	C	2	2	3	50	95		2	yes	T4 **(3)**	II B **(4)** (II B3)	yes	PP, EP, EX, TOX, A	1	23; 27; 44
3295	HYDROCARBONS, LIQUID, N.O.S. WITH MORE THAN 10% BENZENE 85°C < INITIAL BOILING POINT ≤ 115°C	3	F1	II	3+CMR+ (N1, N2, N3)	C	2	2		50	95		2	yes	T4 **(3)**	II B **(4)** (II B3)	yes	PP, EP, EX, TOX, A	1	27; 44
3295	HYDROCARBONS, LIQUID, N.O.S. WITH MORE THAN 10% BENZENE INITIAL BOILING POINT > 115°C	3	F1	II	3+CMR+ (N1, N2, N3)	C	2	2		35	95		2	yes	T4 **(3)**	II B **(4)** (II B3)	yes	PP, EP, EX, TOX, A	1	27; 44
3295	HYDROCARBONS, LIQUID, N.O.S. WITH MORE THAN 10% BENZENE INITIAL BOILING POINT ≤ 60°C	3	F1	III	3+CMR+ (N1, N2, N3)	C	1	1			95		1	yes	T4 **(3)**	II B **(4)** (II B3)	yes	PP, EP, EX, TOX, A	1	27; 44
3295	HYDROCARBONS, LIQUID, N.O.S. WITH MORE THAN 10% BENZENE 60°C < INITIAL BOILING POINT ≤ 85°C	3	F1	III	3+CMR+ (N1, N2, N3)	C	2	2	3	50	95		2	yes	T4 **(3)**	II B **(4)** (II B3)	yes	PP, EP, EX, TOX, A	0	23; 27; 44
3295	HYDROCARBONS, LIQUID, N.O.S. WITH MORE THAN 10% BENZENE 85°C < INITIAL BOILING POINT ≤ 115°C	3	F1	III	3+CMR+ (N1, N2, N3)	C	2	2		50	95		2	yes	T4 **(3)**	II B **(4)** (II B3)	yes	PP, EP, EX, TOX, A	0	27; 44

UN No. or substance identification No.	Name and description	Class	Classification code	Packing group	Danger labels	Type of tank vessel	Cargo tank design	Cargo tank type	Cargo tank equipment	Opening pressure of the pressure relief valve / high-velocity vent valve in kPa	Maximum degree of filling in %	Relative density at 20°C	Type of sampling device	Pump-room below deck permitted	Temperature class	Explosion group	Anti-explosion protection required	Equipment required	Number of cones/blue lights	Additional requirements / Remarks
(1)	(2)	3(a)	3(b)	(4)	(5)	(6)	(7)	(8)	(9)	(10)	(11)	(12)	(13)	(14)	(15)	(16)	(17)	(18)	(19)	(20)
3295	HYDROCARBONS, LIQUID, N.O.S. WITH MORE THAN 10% BENZENE INITIAL BOILING POINT > 115°C	3	F1	III	3+CMR+ (N1, N2, N3)	C	2	2		35	95		2	yes	T4 **(3)**	II B **(4)** (II B3)	yes	PP, EP, EX, TOX, A	0	27; 44
3295	HYDROCARBONS, LIQUID, N.O.S. CONTAINING ISOPRENE AND PENTADIENE, STABILIZED	3	F1	I	3+unst.+N2+CMR	C	2	2	3	50	95	0.678	1	yes	T4 **(3)**	II B3	yes	PP, EX, A	1	3; 44
3295	HYDROCARBONS, LIQUID, N.O.S. Flash point < 23°C with 175 kPa ≤ vp50 < 300 kPa	3	F1	I	3+(N1, N2, N3, CMR, F or S)	N	1	1			95		1	yes	T4 **(3)**	II B **(4)**	yes	PP, EX, A	1	14; 22; 27
3295	HYDROCARBONS, LIQUID, N.O.S. Flash point < 23°C with 175 kPa ≤ vp50 < 300 kPa	3	F1	I	3+(N1, N2, N3, CMR, F or S)	N	2	2	1	50	95		3	yes	T4 **(3)**	II B **(4)**	yes	PP, EX, A	1	14; 22; 27
3295	HYDROCARBONS, LIQUID, N.O.S. Flash point < 23°C with 110 kPa ≤ vp50 < 175 kPa	3	F1	I	3+(N1, N2, N3, CMR, F or S)	N	2	2		50	97		3	yes	T4 **(3)**	II B **(4)**	yes	PP, EX, A	1	14; 22; 27
3295	HYDROCARBONS, LIQUID, N.O.S. Flash point < 23°C with 110 kPa ≤ vp50 < 150 kPa	3	F1	I	3+(N1, N2, N3, CMR, F or S)	N	2	2	3	10	97		3	yes	T4 **(3)**	II B **(4)**	yes	PP, EX, A	1	14; 22; 27
3295	HYDROCARBONS, LIQUID, N.O.S. Flash point < 23°C with vp50 < 110 kPa	3	F1	I	3+(N1, N2, N3, CMR, F or S)	N	2	2		10	97		3	yes	T4 **(3)**	II B **(4)**	yes	PP, EX, A	1	14; 22; 27
3295	HYDROCARBONS, LIQUID, N.O.S. Flash point < 23°C with 175 kPa ≤ vp50 < 300 kPa	3	F1	II	3+(N1, N2, N3, CMR, F or S)	N	1	1			95		1	yes	T4 **(3)**	II B **(4)**	yes	PP, EX, A	1	14; 22; 27
3295	HYDROCARBONS, LIQUID, N.O.S. Flash point < 23°C with 175kPa ≤ vp50 < 300 kPa	3	F1	II	3+(N1, N2, N3, CMR, F or S)	N	2	2	1	50	95		3	yes	T4 **(3)**	II B **(4)**	yes	PP, EX, A	1	14; 22; 27

UN No. or substance identification No.	Name and description	Class	Classification code	Packing group	Danger labels	Type of tank vessel	Cargo tank design	Cargo tank type	Cargo tank equipment	Opening pressure of the pressure relief valve / high-velocity vent valve in kPa	Maximum degree of filling in %	Relative density at 20°C	Type of sampling device	Pump-room below deck permitted	Temperature class	Explosion group	Anti-explosion protection required	Equipment required	Number of cones/blue lights	Additional requirements / Remarks
(1)	(2)	3(a)	3(b)	(4)	(5)	(6)	(7)	(8)	(9)	(10)	(11)	(12)	(13)	(14)	(15)	(16)	(17)	(18)	(19)	(20)
3295	HYDROCARBONS, LIQUID, N.O.S. Flash point < 23°C with 110 kPa ≤ vp50 < 175 kPa	3	F1	II	3+(N1, N2, N3, CMR, F or S)	N	2	2		50	97		3	yes	T4 **(3)**	II B **(4)**	yes	PP, EX, A	1	14; 22; 27
3295	HYDROCARBONS, LIQUID, N.O.S. Flash point < 23°C with 110 kPa ≤ vp50 < 150 kPa	3	F1	II	3+(N1, N2, N3, CMR, F or S)	N	2	2	3	10	97		3	yes	T4 **(3)**	II B **(4)**	yes	PP, EX, A	1	14; 22; 27
3295	HYDROCARBONS, LIQUID, N.O.S. Flash point < 23°C with vp50<110kPa	3	F1	II	3+(N1, N2, N3, CMR, F or S)	N	2	2		10	97		3	yes	T4 **(3)**	II B **(4)**	yes	PP, EX, A	1	14; 22; 27
3295	HYDROCARBONS, LIQUID, N.O.S. Flash point ≥ 23°C but ≤ 60°C	3	F1	III	3+(N1, N2, N3, CMR, F or S)	N	3	2			97		3	yes	T4 **(3)**	II B **(4)**	yes	PP, EX, A	0	14; 22; 27
3412	FORMIC ACID with not less than 10% but not more than 85% acid by mass	8	C3	II	8+N3	N	2	3		10	97	1.22	3	yes	T1 **(12)**	II A	yes	PP, EP, EX, A	0	6:+12°C; 17; 34
3412	FORMIC ACID with not less than 5% but less than 10% acid by mass	8	C3	III	8	N	2	3		10	97	1.22	3	yes	T1 **(12)**	II A	yes	PP, EP, EX, A	0	6:+12°C; 17; 34
3426	ACRYLAMIDE, SOLUTION	6.1	T1	III	6.1	C	2	2		30	95	1.03	2	no			no	PP, EP, TOX, A	0	3; 5; 16
3429	CHLOROTOLUIDINES, LIQUID	6.1	T1	III	6.1+S	C	2	2		25	95	1.15	2	no	T1 **(12)**	II A **(6)**	yes	PP, EP, EX, TOX, A	0	6:+6°C; 17
3446	NITROTOLUENES, SOLID, MOLTEN (p-NITROTOLUENE)	6.1	T2	II	6.1+N2+S	C	2	2	2	25	95	1.16	2	no	T2 **(12)**	II B (II B3 **(11)**)	yes	PP, EP, EX, TOX, A	2	7; 17
3446	NITROTOLUENES, SOLID, MOLTEN (p-NITROTOLUENE)	6.1	T2	II	6.1+N2+S	C	2	1	4	25	95	1.16	2	no			no	PP, EP, TOX, A	2	7; 17; 20:+88°C; 26
3451	TOLUIDINES, SOLID, MOLTEN (p-TOLUIDINE)	6.1	T2	II	6.1+N1	C	2	2	2	25	95	1.05	2	no	T1 **(12)**	II A **(7)**	yes	PP, EP, EX, TOX, A	2	7; 17

UN No. or substance identification No.	Name and description	Class	Classification code	Packing group	Danger labels	Type of tank vessel	Cargo tank design	Cargo tank type	Cargo tank equipment	Opening pressure of the pressure relief valve / high-velocity vent valve in kPa	Maximum degree of filling in %	Relative density at 20°C	Type of sampling device	Pump-room below deck permitted	Temperature class	Explosion group	Anti-explosion protection required	Equipment required	Number of cones/blue lights	Additional requirements / Remarks
(1)	(2)	3(a)	3(b)	(4)	(5)	(6)	(7)	(8)	(9)	(10)	(11)	(12)	(13)	(14)	(15)	(16)	(17)	(18)	(19)	(20)
3451	TOLUIDINES, SOLID, MOLTEN (p-TOLUIDINE)	6.1	T2	II	6.1+N1	C	2	2	4	25	95	1.05	2	no			no	PP, EP, TOX, A	2	7; 17; 20:+60°C
3455	CRESOLS, SOLID, MOLTEN	6.1	TC2	II	6.1+8+N3	C	2	2	2	25	95	1.03 - 1.05	2	no	T1 **(12)**	II A **(7)**	yes	PP, EP, EX, TOX, A	2	7; 17
3455	CRESOLS, SOLID, MOLTEN	6.1	TC2	II	6.1+8+N3	C	2	2	4	25	95	1.03 - 1.05	2	no			no	PP, EP, TOX, A	2	7; 17; 20:+66°C
3463	PROPIONIC ACID with not less than 90% acid by mass	8	CF1	II	8+3+N3	N	3	3			97	0.99	3	yes	T1 **(12)**	II A **(6)**	yes	PP, EP, EX, A	1	34
3475	ETHANOL AND GASOLINE MIXTURE or ETHANOL AND MOTOR SPIRIT MIXTURE or ETHANOL AND PETROL MIXTURE, with more than 10% but not more than 90% éthanol	3	F1	II	3+N2+CMR+F	N	2	3	3	10	97	0.69 - 0.78 **(9)**	3	yes	T3	IIA	yes	PP, EP, EX, TOX, A	1	
3475	ETHANOL AND GASOLINE MIXTURE or ETHANOL AND MOTOR SPIRIT MIXTURE or ETHANOL AND PETROL MIXTURE, with more than 90% éthanol	3	F1	II	3+N2+CMR+F	N	2	3	3	10	97	0.78 - 0.79 **(9)**	3	yes	T2 **(12)**	IIB (II B1)	yes	PP, EP, EX, TOX, A	1	
3494	Petroleum, sour crude oil, flammable, toxic, initial boiling point ≤ 60°C	3	TF1	I	3+6.1+(N1, N2, N3, CMR, F)	C	1	1			95		1	no	T4 **(3)**	II B **(4)**	yes	PP, EP, EX, TOX, A	2	22
3494	Petroleum, sour crude oil, flammable, toxic, initial boiling point ≤ 60°C	3	TF1	II	3+6.1+(N1, N2, N3, CMR, F)	C	1	1			95		1	no	T4 **(3)**	II B **(4)**	yes	PP, EP, EX, TOX, A	2	22
3494	Petroleum, sour crude oil, flammable, toxic, initial boiling point ≤ 60°C	3	TF1	III	3+6.1+(N1, N2, N3, CMR, F)	C	1	1			95		1	no	T4 **(3)**	II B **(4)**	yes	PP, EP, EX, TOX, A	2	22
3494	Petroleum, sour crude oil, flammable, toxic, 60°C < Initial boiling point ≤ 85°C	3	TF1	II	3+6.1+(N1, N2, N3, CMR, F)	C	2	2	3	50	95		2	no	T4 **(3)**	II B **(4)**	yes	PP, EP, EX, TOX, A	2	22; 23

UN No. or substance identification No.	Name and description	Class	Classification code	Packing group	Danger labels	Type of tank vessel	Cargo tank design	Cargo tank type	Cargo tank equipment	Opening pressure of the pressure relief valve / high-velocity vent valve in kPa	Maximum degree of filling in %	Relative density at 20°C	Type of sampling device	Pump-room below deck permitted	Temperature class	Explosion group	Anti-explosion protection required	Equipment required	Number of cones/blue lights	Additional requirements / Remarks
(1)	(2)	3(a)	3(b)	(4)	(5)	(6)	(7)	(8)	(9)	(10)	(11)	(12)	(13)	(14)	(15)	(16)	(17)	(18)	(19)	(20)
3494	Petroleum, sour crude oil, flammable, toxic, 85°C < initial boiling point ≤ 115°C	3	TF1	II	3+6.1+(N1, N2, N3, CMR, F)	C	2	2		50	95		2	no	T4 **(3)**	II B **(4)**	yes	PP, EP, EX, TOX, A	2	22
3494	Petroleum, sour crude oil, flammable, toxic, 115°C < Initial boiling point	3	TF1	II	3+6.1+(N1, N2, N3, CMR, F)	C	2	2		35	95		2	no	T4 **(3)**	II B **(4)**	yes	PP, EP, EX, TOX, A	2	22
3494	Petroleum, sour crude oil, flammable, toxic, 60°C < initial boiling point ≤ 85°C	3	TF1	III	3+6.1+(N1, N2, N3, CMR, F)	C	2	2	3	50	95		2	no	T4 **(3)**	II B **(4)**	yes	PP, EP, EX, TOX, A	0	22; 23
3494	Petroleum, sour crude oil, flammable, toxic, 85°C < initial boiling point ≤ 115°C	3	TF1	III	3+6.1+(N1, N2, N3, CMR, F)	C	2	2		50	95		2	no	T4 **(3)**	II B **(4)**	yes	PP, EP, EX, TOX, A	0	22
3494	Petroleum, sour crude oil, flammable, toxic, 115°C < initial boiling point	3	TF1	III	3+6.1+(N1, N2, N3, CMR, F)	C	2	2		35	95		2	no	T4 **(3)**	II B **(4)**	yes	PP, EP, EX, TOX, A	0	22
3494	Petroleum, sour crude oil, flammable, toxic, initial boiling point ≤ 60°C	3	TF1	I	3+6.1+(N1, N2, N3, CMR, F)	C	1	1			95		1	no	T4 **(3)**	II B **(4)** (II B3)	yes	PP, EP, EX, TOX, A	2	22; 44
3494	Petroleum, sour crude oil, flammable, toxic, initial boiling point ≤ 60°C	3	TF1	II	3+6.1+(N1, N2, N3, CMR, F)	C	1	1			95		1	no	T4 **(3)**	II B **(4)** (II B3)	yes	PP, EP, EX, TOX, A	2	22; 44
3494	Petroleum, sour crude oil, flammable, toxic, initial boiling point ≤ 60°C	3	TF1	III	3+6.1+(N1, N2, N3, CMR, F)	C	1	1			95		1	no	T4 **(3)**	II B **(4)** (II B3)	yes	PP, EP, EX, TOX, A	2	22; 44
3494	Petroleum, sour crude oil, flammable, toxic, 60°C < Initial boiling point ≤ 85°C	3	TF1	II	3+6.1+(N1, N2, N3, CMR, F)	C	2	2	3	50	95		2	no	T4 **(3)**	II B **(4)** (II B3)	yes	PP, EP, EX, TOX, A	2	22; 23; 44
3494	Petroleum, sour crude oil, flammable, toxic, 85°C < initial boiling point ≤ 115°C	3	TF1	II	3+6.1+(N1, N2, N3, CMR, F)	C	2	2		50	95		2	no	T4 **(3)**	II B **(4)** (II B3)	yes	PP, EP, EX, TOX, A	2	22; 44

UN No. or substance identification No.	Name and description	Class	Classification code	Packing group	Danger labels	Type of tank vessel	Cargo tank design	Cargo tank type	Cargo tank equipment	Opening pressure of the pressure relief valve / high-velocity vent valve in kPa	Maximum degree of filling in %	Relative density at 20°C	Type of sampling device	Pump-room below deck permitted	Temperature class	Explosion group	Anti-explosion protection required	Equipment required	Number of cones/blue lights	Additional requirements / Remarks
(1)	(2)	3(a)	3(b)	(4)	(5)	(6)	(7)	(8)	(9)	(10)	(11)	(12)	(13)	(14)	(15)	(16)	(17)	(18)	(19)	(20)
3494	Petroleum, sour crude oil, flammable, toxic, 115°C < Initial boiling point	3	TF1	II	3+6.1+(N1, N2, N3, CMR, F)	C	2	2		35	95		2	no	T4 **(3)**	II B **(4)** (II B3)	yes	PP, EP, EX, TOX, A	2	22; 44
3494	Petroleum, sour crude oil, flammable, toxic, 60°C < initial boiling point ≤ 85°C	3	TF1	III	3+6.1+(N1, N2, N3, CMR, F)	C	2	2	3	50	95		2	no	T4 **(3)**	II B **(4)** (II B3)	yes	PP, EP, EX, TOX, A	0	22; 23; 44
3494	Petroleum, sour crude oil, flammable, toxic, 85°C < initial boiling point ≤ 115°C	3	TF1	III	3+6.1+(N1, N2, N3, CMR, F)	C	2	2		50	95		2	no	T4 **(3)**	II B **(4)** (II B3)	yes	PP, EP, EX, TOX, A	0	22; 44
3494	Petroleum, sour crude oil, flammable, toxic, 115°C < initial boiling point	3	TF1	III	3+6.1+(N1, N2, N3, CMR, F)	C	2	2		35	95		2	no	T4 **(3)**	II B **(4)** (II B3)	yes	PP, EP, EX, TOX, A	0	22; 44
9000	AMMONIA, DEEPLY REFRIGERATED	2	3TC		2.1+2.3+8+N1	G	1	1	1; 3		95		1	no	T1 **(12)**	II A	yes	PP, EP, EX, TOX, A	2	1; 2; 31
9000	AMMONIA, ANHYDROUS, DEEPLY REFRIGERATED	2	3TC		2.1+2.3+8+N1	G	2	4	1; 3		95		1	no	T1 **(12)**	II A	yes	PP, EP, EX, TOX, A	2	1; 2; 31
9001	SUBSTANCE WITH A FLASHPOINT ABOVE 60 °C, HEATED within a range of 15 K below the flashpoint	3	F4		3+(N1, N2, N3, CMR, F or S)	N	3	2			97		3	yes	T4 **(3)**	II B **(4)**	yes	PP, EX, A	0	22; 27
9001	SUBSTANCE WITH A FLASHPOINT ABOVE 60 °C, HEATED within a range of 15 K below the flashpoint	3	F4		3+(N1, N2, N3, CMR, F or S)	N	3	2			97		3	yes	T4 **(3)**	II B3	yes	PP, EX, A	0	22; 27; 44
9002	SUBSTANCES HAVING A SELF-IGNITION TEMPERATURE ≤ 200 °C, N.O.S.	3	F5		3+(N1, N2, N3, CMR, F or S)	C	1	1			95		1	yes	T4	II B **(4)**	yes	PP, EX, A	0	22; 27
9002	SUBSTANCES HAVING A SELF-IGNITION TEMPERATURE ≤ 200 °C, N.O.S.	3	F5		3+(N1, N2, N3, CMR, F or S)	C	1	1			95		1	yes	T4	II B3	yes	PP, EX, A	0	22; 27; 44

UN No. or substance identification No.	Name and description	Class	Classification code	Packing group	Danger labels	Type of tank vessel	Cargo tank design	Cargo tank type	Cargo tank equipment	Opening pressure of the pressure relief valve / high-velocity vent valve in kPa	Maximum degree of filling in %	Relative density at 20°C	Type of sampling device	Pump-room below deck permitted	Temperature class	Explosion group	Anti-explosion protection required	Equipment required	Number of cones/blue lights	Additional requirements / Remarks
(1)	(2)	3(a)	3(b)	(4)	(5)	(6)	(7)	(8)	(9)	(10)	(11)	(12)	(13)	(14)	(15)	(16)	(17)	(18)	(19)	(20)
9003	SUBSTANCES WITH A FLASH- POINT ABOVE 60°C BUT NOT MORE THAN 100°C or SUBSTANCES WHERE 60°C < flash- point ≤ 100°C, which are not affected to another class (ETHYLENE GLYCOL MONOBUTYL ETHER)	9	M1 2		9+N3+F	N	4	3			97	0.9	3	yes			no	PP	0	
9003	SUBSTANCES WITH A FLASH- POINT ABOVE 60°C BUT NOT MORE THAN 100°C or SUBSTANCES WHERE 60°C < flash- point ≤ 100°C, which are not affected to another class (2-ETHYLHEXY-LACRYLATE)	9	M1 2		9+N3+F	N	4	3			97	0.89	3	yes			no	PP	0	3; 5; 16
9003	SUBSTANCES WITH A FLASH- POINT ABOVE 60°C BUT NOT MORE THAN 100°C or SUBSTANCES WHERE 60°C < flash- point ≤ 100°C, which are not affected to another class	9	M1 2		9+(N1, N2, N3, CMR, F or S)	N	4	2			97		3	yes			no	PP	0	22; 27
9004	DIPHENYLMETHANE- 4.4'- DIISOCYA-NATE	9	M1 2		9+S	N	2	3	4	10	95	1.21 **(10)**	3	yes			no	PP	0	7; 8; 17; 19
9005	ENVIRONMENTALLY HAZARDOUS SUBSTANCE, SOLID, N.O.S, MOLTEN (maximum transport temperature: T ≤ 80°C)	9	M1 2		9+(N2, N3, CMR, F or S)	N	4	2	4		95		3	yes			no	PP	0	7; 22; 27
9005	ENVIRONMENTALLY HAZARDOUS SUBSTANCE, SOLID, N.O.S, MOLTEN (maximum transport temperature: 80°C < T ≤ 115°C)	9	M1 2		9+(N2, N3, CMR, F or S)	N	4	1	4		95		3	yes			no	PP	0	7; 22; 25; 27

UN No. or substance identification No.	Name and description	Class	Classification code	Packing group	Danger labels	Type of tank vessel	Cargo tank design	Cargo tank type	Cargo tank equipment	Opening pressure of the pressure relief valve / high-velocity vent valve in kPa	Maximum degree of filling in %	Relative density at 20°C	Type of sampling device	Pump-room below deck permitted	Temperature class	Explosion group	Anti-explosion protection required	Equipment required	Number of cones/blue lights	Additional requirements / Remarks
(1)	(2)	3(a)	3(b)	(4)	(5)	(6)	(7)	(8)	(9)	(10)	(11)	(12)	(13)	(14)	(15)	(16)	(17)	(18)	(19)	(20)
9005	ENVIRONMENTALLY HAZARDOUS SUBSTANCE, SOLID, N.O.S, MOLTEN (maximum transport temperature: T > 115°C)	9	M1 2		9+(N2, N3, CMR, F or S)	N	4	1	4		95		3	yes			no	PP	0	7; 22; 27
9006	ENVIRONMENTALLY HAZARDOUS SUBSTANCE, LIQUID, N.O.S.	9	M1 2		9+(N2, N3, CMR, F or S)	N	4	2			97		3	yes			no	PP	0	22; 27

(1) The ignition temperature has not been determined in accordance with a standardized determination procedure therefore, provisional assignment has been made to temperature class T2 which is considered safe.

(2) The ignition temperature has not been determined in accordance with a standardized determination procedure therefore, provisional assignment has been made to temperature class T3 which is considered safe.

(3) The ignition temperature has not been determined in accordance with a standardized determination procedure therefore, provisional assignment has been made to temperature class T4 which is considered safe.

(4) The maximum experimental safe gap (MESG) has not been measured in accordance with a standardized determination procedure; therefore, assignment has been made to explosion group II B which is considered safe.

(5) The maximum experimental safe gap (MESG) has not been measured in accordance with a standardized determination procedure; therefore, assignment has been made to explosion group II C which is considered safe.

(6) The maximum experimental safe gap (MESG) has not been measured in accordance with a standardized determination procedure; therefore, assignment has been made to the explosion group that is considered safe.

(7) The maximum experimental safe gap (MESG) has not been measured in accordance with a standardized determination procedure; therefore, assignment has been made to the explosion group in compliance with IEC 60079-20-1."

(8) Assignment in accordance with IMO IBC Code (International Code for the Construction and Equipment of Ships Carrying Dangerous Chemicals in Bulk) (IBC Code).

(9) Relative density at 15°C.

(10) Relative density at 25°C.

(11) No maximum experimental safe gap (MESG) has been determined in accordance with a standardized determination procedure; thus, the substance is provisionally assigned to explosion group II B3, which is considered to be safe.

(12) This temperature class does not apply for the selection of explosion protected installations and equipment. The surface temperature of explosion protected installations and equipment shall not exceed 200° C.

Shaping a World of Trust

Marine & Offshore
Le Triangle de l'Arche - 8 Cours du Triangle - CS 50101
92937 Paris La Defense Cedex - France
Tel: + 33 (0)1 55 24 70 00
https://marine-offshore.bureauveritas.com/bv-rules