Rules for the Classification of Inland Navigation Vessels

PART C – Machinery, Electricity and Fire

Chapters 1 – 2 – 3 – 4

NR 217.C1 DT R06 E **June 2021**

Marine & Offshore
Le Triangle de l'Arche - 8 Cours du Triangle - CS 50101
92937 Paris La Defense Cedex - France
Tel: + 33 (0)1 55 24 70 00
https://marine-offshore.bureauveritas.com/bv-rules
© 2021 Bureau Veritas - All rights reserved

BUREAU VERITAS MARINE & OFFSHORE

GENERAL CONDITIONS

1. INDEPENDENCE OF THE SOCIETY AND APPLICABLE TERMS

1.1 The Society shall remain at all times an independent contractor and neither the Society nor any of its officers, employees, servants, agents or subcontractors shall be or act as an employee, servant or agent of any other party hereto in the performance of the Services.

1.2 The operations of the Society in providing its Services are exclusively conducted by way of random inspections and do not, in any circumstances, involve monitoring or exhaustive verification.

1.3 The Society acts as a services provider. This cannot be construed as an obligation bearing on the Society to obtain a result or as a warranty. The Society is not and may not be considered as an underwriter, broker in Unit's sale or chartering, expert in Unit's valuation, consulting engineer, controller, naval architect, designer, manufacturer, shipbuilder, repair or conversion yard, charterer or shipowner; none of the above listed being relieved from any of their expressed or implied obligations as a result of the interventions of the Society.

1.4 Only the Society is qualified to apply and interpret its Rules.

1.5 The Client acknowledges the latest versions of the Conditions and of the applicable Rules applying to the Services' performance.

1.6 Unless an express written agreement is made between the Parties on the applicable Rules, the applicable Rules shall be the Rules applicable at the time of entering into the relevant contract for the performance of the Services.

1.7 The Services' performance is solely based on the Conditions. No other terms shall apply whether express or implied.

2. DEFINITIONS

2.1 **"Certificate(s)"** means classification or statutory certificates, attestations and reports following the Society's intervention.

2.2 **"Certification"** means the activity of certification in application of national and international regulations or standards ("Applicable Referential"), in particular by delegation from different governments that can result in the issuance of a Certificate.

2.3 **"Classification"** means the classification of a Unit that can result or not in the issuance of a classification Certificate with reference to the Rules. Classification (or Certification as defined in clause 2.2) is an appraisement given by the Society to the Client, at a certain date, following surveys by its surveyors on the level of compliance of the Unit to the Society's Rules and/or to Applicable Referential for the Services provided. They cannot be construed as an implied or express warranty of safety, fitness for the purpose, seaworthiness of the Unit or of its value for sale, insurance or chartering.

2.4 **"Client"** means the Party and/or its representative requesting the Services.

2.5 **"Conditions"** means the terms and conditions set out in the present document.

2.6 **"Industry Practice"** means international maritime and/or offshore industry practices.

2.7 **"Intellectual Property"** means all patents, rights to inventions, utility models, copyright and related rights, trade marks, logos, service marks, trade dress, business and domain names, rights in trade dress or get-up, rights in goodwill or to sue for passing off, unfair competition rights, rights in designs, rights in computer software, database rights, topography rights, moral rights, rights in confidential information (including know-how and trade secrets), methods and protocols for Services, and any other intellectual property rights, in each case whether capable of registration, registered or unregistered and including all applications for and renewals, reversions or extensions of such rights, and all similar or equivalent rights or forms of protection in any part of the world.

2.8 **"Parties"** means the Society and Client together.

2.9 **"Party"** means the Society or the Client.

2.10 **"Register"** means the public electronic register of ships updated regularly by the Society.

2.11 **"Rules"** means the Society's classification rules (available online on veristar.com), guidance notes and other documents. The Society's Rules take into account at the date of their preparation the state of currently available and proven technical minimum requirements but are not a standard or a code of construction neither a guide for maintenance, a safety handbook or a guide of professional practices, all of which are assumed to be known in detail and carefully followed at all times by the Client.

2.12 **"Services"** means the services set out in clauses 2.2 and 2.3 but also other services related to Classification and Certification such as, but not limited to: ship and company safety management certification, ship and port security certification, maritime labour certification, training activities, all activities and duties incidental thereto such as documentation on any supporting means, software, instrumentation, measurements, tests and trials on board. The Services are carried out by the Society according to the Rules and/or the Applicable Referential and to the Bureau Veritas' Code of Ethics. The Society shall perform the Services according to the applicable national and international standards and Industry Practice and always on the assumption that the Client is aware of such standards and Industry Practice.

2.13 **"Society"** means the classification society **'Bureau Veritas Marine & Offshore SAS'**, a company organized and existing under the laws of France, registered in Nanterre under number 821 131 844, or any other legal entity of Bureau Veritas Group as may be specified in the relevant contract, and whose main activities are Classification and Certification of ships or offshore units.

2.14 **"Unit"** means any ship or vessel or offshore unit or structure of any type or part of it or system whether linked to shore, river bed or sea bed or not, whether operated or located at sea or in inland waters or partly on land, including submarines, hovercrafts, drilling rigs, offshore installations of any type and of any purpose, their related and ancillary equipment, subsea or not, such as well head and pipelines, mooring legs and mooring points or otherwise as decided by the Society.

3. SCOPE AND PERFORMANCE

3.1 Subject to the Services requested and always by reference to the Rules, and/or to the Applicable Referential, the Society shall:

- review the construction arrangements of the Unit as shown on the documents provided by the Client;
- conduct the Unit surveys at the place of the Unit construction;
- class the Unit and enter the Unit's class in the Society's Register;
- survey the Unit periodically in service to note whether the requirements for the maintenance of class are met.

The Client shall inform the Society without delay of any circumstances which may cause any changes on the conducted surveys or Services.

3.2 The Society will not:

- declare the acceptance or commissioning of a Unit, nor its construction in conformity with its design, such activities remaining under the exclusive responsibility of the Unit's owner or builder;
- engage in any work relating to the design, construction, production or repair checks, neither in the operation of the Unit or the Unit's trade, neither in any advisory services, and cannot be held liable on those accounts.

4. RESERVATION CLAUSE

4.1 The Client shall always: (i) maintain the Unit in good condition after surveys; (ii) present the Unit for surveys; and (iii) inform the Society in due time of any circumstances that may affect the given appraisement of the Unit or cause to modify the scope of the Services.

4.2 Certificates are only valid if issued by the Society.

4.3 The Society has entire control over the Certificates issued and may at any time withdraw a Certificate at its entire discretion including, but not limited to, in the following situations: where the Client fails to comply in due time with instructions of the Society or where the Client fails to pay in accordance with clause 6.2 hereunder.

4.4 The Society may at times and at its sole discretion give an opinion on a design or any technical element that would 'in principle' be acceptable to the Society. This opinion shall not presume on the final issuance of any Certificate nor on its content in the event of the actual issuance of a Certificate. This opinion shall only be an appraisement made by the Society which shall not be held liable for it.

5. ACCESS AND SAFETY

5.1 The Client shall give to the Society all access and information necessary for the efficient performance of the requested Services. The Client shall be the sole responsible for the conditions of presentation of the Unit for tests, trials and surveys and the conditions under which tests and trials are carried out. Any information, drawing, etc. required for the performance of the Services must be made available in due time.

5.2 The Client shall notify the Society of any relevant safety issue and shall take all necessary safety-related measures to ensure a safe work environment for the Society or any of its officers, employees, servants, agents or subcontractors and shall comply with all applicable safety regulations.

6. PAYMENT OF INVOICES

6.1 The provision of the Services by the Society, whether complete or not, involves, for the part carried out, the payment of fees thirty (30) days upon issuance of the invoice.

6.2 Without prejudice to any other rights hereunder, in case of Client's payment default, the Society shall be entitled to charge, in addition to the amount not properly paid, interest equal to twelve (12) months LIBOR plus two (2) per-cent as of due date calculated on the number of days such payment is delinquent. The Society shall also have the right to withhold Certificates and other documents and/or to suspend or revoke the validity of Certificates.

6.3 In case of dispute on the invoice amount, the undisputed portion of the invoice shall be paid and an explanation on the dispute shall accompany payment so that action can be taken to resolve the dispute.

7. LIABILITY

7.1 The Society bears no liability for consequential loss. For the purpose of this clause consequential loss shall include, without limitation:

- Indirect or consequential loss;
- Any loss and/or deferral of production, loss of product, loss of use, loss of bargain, loss of revenue, loss of profit or anticipated profit, loss of business and business interruption, in each case whether direct or indirect.

The Client shall defend, release, save, indemnify, defend and hold harmless the Society from the Client's own consequential loss regardless of cause.

7.2 Except in case of wilful misconduct of the Society, death or bodily injury caused by the Society's negligence and any other liability that could not be, by law, limited, the Society's maximum liability towards the Client is limited to one hundred and fifty per-cent (150%) of the price paid by the Client to the Society for the Services having caused the damage. This limit applies to any liability of whatsoever nature and howsoever arising, including fault by the Society, breach of contract, breach of warranty, tort, strict liability, breach of statute.

7.3 All claims shall be presented to the Society in writing within three (3) months of the completion of Services' performance or (if later) the date when the events which are relied on were first discovered by the Client. Any claim not so presented as defined above shall be deemed waived and absolutely time barred.

8. INDEMNITY CLAUSE

8.1 The Client shall defend, release, save, indemnify and hold harmless the Society from and against any and all claims, demands, lawsuits or actions for damages, including legal fees, for harm or loss to persons and/or property tangible, intangible or otherwise which may be brought against the Society, incidental to, arising out of or in connection with the performance of the Services (including for damages arising out of or in connection with opinions delivered according to clause 4.4 above) except for those claims caused solely and completely by the gross negligence of the Society, its officers, employees, servants, agents or subcontractors.

9. TERMINATION

9.1 The Parties shall have the right to terminate the Services (and the relevant contract) for convenience after giving the other Party thirty (30) days' written notice, and without prejudice to clause 6 above.

9.2 The Services shall be automatically and immediately terminated in the event the Client can no longer establish any form of interest in the Unit (e.g. sale, scrapping).

9.3 The Classification granted to the concerned Unit and the previously issued Certificates shall remain valid until the date of effect of the termination notice issued, or immediately in the event of termination under clause 9.2, subject to compliance with clause 4.1 and 6 above.

9.4 In the event where, in the reasonable opinion of the Society, the Client is in breach, or is suspected to be in breach of clause 16 of the Conditions, the Society shall have the right to terminate the Services (and the relevant contracts associated) with immediate effect.

10. FORCE MAJEURE

10.1 Neither Party shall be responsible or liable for any failure to fulfil any term or provision of the Conditions if and to the extent that fulfilment has been delayed or temporarily prevented by a force majeure occurrence without the fault or negligence of the Party affected and which, by the exercise of reasonable diligence, the said Party is unable to provide against.

10.2 For the purpose of this clause, force majeure shall mean any circumstance not being within a Party's reasonable control including, but not limited to: acts of God, natural disasters, epidemics or pandemics, wars, terrorist attacks, riots, sabotages, impositions of sanctions, embargoes, nuclear, chemical or biological contaminations, laws or action taken by a government or public authority, quotas or prohibition, expropriations, destructions of the worksite, explosions, fires, accidents, any labour or trade disputes, strikes or lockouts.

11. CONFIDENTIALITY

11.1 The documents and data provided to or prepared by the Society in performing the Services, and the information made available to the Society, will be treated as confidential except where the information:

- is properly and lawfully in the possession of the Society;
- is already in possession of the public or has entered the public domain, other than through a breach of this obligation;
- is acquired or received independently from a third party that has the right to disseminate such information;
- is required to be disclosed under applicable law or by a governmental order, decree, regulation or rule or by a stock exchange authority (provided that the receiving Party shall make all reasonable efforts to give prompt written notice to the disclosing Party prior to such disclosure).

11.2 The Parties shall use the confidential information exclusively within the framework of their activity underlying these Conditions.

11.3 Confidential information shall only be provided to third parties with the prior written consent of the other Party. However, such prior consent shall not be required when the Society provides the confidential information to a subsidiary.

11.4 Without prejudice to sub-clause 11.1, the Society shall have the right to disclose the confidential information if required to do so under regulations of the International Association of Classifications Societies (IACS) or any statutory obligations.

12. INTELLECTUAL PROPERTY

12.1 Each Party exclusively owns all rights to its Intellectual Property created before or after the commencement date of the Conditions and whether or not associated with any contract between the Parties.

12.2 The Intellectual Property developed by the Society for the performance of the Services including, but not limited to drawings, calculations, and reports shall remain the exclusive property of the Society.

13. ASSIGNMENT

13.1 The contract resulting from to these Conditions cannot be assigned or transferred by any means by a Party to any third party without the prior written consent of the other Party.

13.2 The Society shall however have the right to assign or transfer by any means the said contract to a subsidiary of the Bureau Veritas Group.

14. SEVERABILITY

14.1 Invalidity of one or more provisions does not affect the remaining provisions.

14.2 Definitions herein take precedence over other definitions which may appear in other documents issued by the Society.

14.3 In case of doubt as to the interpretation of the Conditions, the English text shall prevail.

15. GOVERNING LAW AND DISPUTE RESOLUTION

15.1 These Conditions shall be construed in accordance with and governed by the laws of England and Wales.

15.2 Any dispute shall be finally settled under the Rules of Arbitration of the Maritime Arbitration Chamber of Paris ("CAMP"), which rules are deemed to be incorporated by reference into this clause. The number of arbitrators shall be three (3). The place of arbitration shall be Paris (France). The Parties agree to keep the arbitration proceedings confidential.

15.3 Notwithstanding clause 15.2, disputes relating to the payment of the Society's invoices may be submitted by the Society to the *Tribunal de Commerce de Nanterre*, France, or to any other competent local Court, at the Society's entire discretion.

16. PROFESSIONAL ETHICS

16.1 Each Party shall conduct all activities in compliance with all laws, statutes, rules, economic and trade sanctions (including but not limited to US sanctions and EU sanctions) and regulations applicable to such Party including but not limited to: child labour, forced labour, collective bargaining, discrimination, abuse, working hours and minimum wages, anti-bribery, anti-corruption, copyright and trademark protection, personal data protection (https://personaldataprotection.bureauveritas.com/privacypolicy).

Each of the Parties warrants that neither it, nor its affiliates, has made or will make, with respect to the matters provided for hereunder, any offer, payment, gift or authorization of the payment of any money directly or indirectly, to or for the use or benefit of any official or employee of the government, political party, official, or candidate.

16.2 In addition, the Client shall act consistently with the Bureau Veritas' Code of Ethics and, when applicable, Business Partner Code of Conduct both available at https://group.bureauveritas.com/group/corporate-social-responsibility/operational-excellence.

RULES FOR INLAND NAVIGATION VESSELS

Part C
Machinery, Electricity and Fire

Chapters **1 2 3 4**

Chapter 1 **MACHINERY AND SYSTEMS**

Chapter 2 **ELECTRICAL INSTALLATIONS**

Chapter 3 **AUTOMATION**

Chapter 4 **FIRE PROTECTION, DETECTION AND EXTINCTION**

June 2021

These Rules apply to inland navigation vessels for which contracts for construction are signed on or after June 1st, 2021.

The English version of these Rules takes precedence over editions in other languages.

CHAPTER 1
MACHINERY AND SYSTEMS

Section 1 General Requirements

1 General 29

1.1 Application
1.2 Additional requirements
1.3 Documentation to be submitted
1.4 Machinery space of category A
1.5 Machinery spaces
1.6 Essential services

2 Design and construction 29

2.1 General
2.2 Materials, welding and testing
2.3 Vibrations
2.4 Operation in inclined position
2.5 Ambient conditions
2.6 Power of machinery
2.7 Astern power
2.8 Safety devices
2.9 Fuels

3 Arrangement and installation on board 31

3.1 General
3.2 Floors
3.3 Bolting down
3.4 Safety devices on moving parts
3.5 Gauges
3.6 Ventilation in machinery spaces
3.7 Hot surfaces and fire protection
3.8 Machinery remote control, alarms and safety systems

4 Tests and trials 32

4.1 Works tests
4.2 Tests on board

Section 2 Diesel Engines

1 General 33

1.1 Application
1.2 Documentation to be submitted
1.3 Definitions

2 Design and construction 35

2.1 Materials and welding
2.2 Crankshaft
2.3 Crankcase
2.4 Systems
2.5 Starting air system
2.6 Control and safety devices
2.7 Control and monitoring

3 Arrangement and installation 39
3.1 Starting arrangements
3.2 Turning gear
3.3 Trays
3.4 Exhaust gas system
4 Type tests, material tests, workshop inspection and testing, certification 39
4.1 General

Section 3 Pressure Equipment

1 General 40
1.1 Principles
1.2 Application
1.3 Definitions
1.4 Classes
1.5 Applicable Rules
1.6 Documentation to be submitted
2 Design and construction - Scantlings of pressure parts 43
2.1 General
2.2 Materials
2.3 Permissible stresses
2.4 Scantling of pressure vessels
3 Design and construction - Equipment 46
3.1 All pressure vessels
3.2 Boilers and steam generators
3.3 Thermal oil heaters and thermal oil installation
3.4 Special types of pressure vessels
3.5 Thermal oil heaters and thermal oil installation
3.6 Other pressure vessels
4 Design and construction - Fabrication and welding 51
4.1 General principles
4.2 Fabrication and welding
5 Design and construction - Control and monitoring 51
5.1 Boiler control and monitoring system
5.2 Pressure vessel instrumentation
5.3 Thermal oil heater control and monitoring
5.4 Control and monitoring requirements
6 Arrangement and installation 52
6.1 Foundations
6.2 Boilers
6.3 Pressure vessels
6.4 Thermal oil heaters
7 Material test, workshop inspection and testing, certification 53
7.1 Material testing
7.2 Workshop inspections
7.3 Hydrostatic tests
7.4 Certification

Section 4 Oil Firing Equipment

1 General 55

1.1

2 Oil firing equipment for boilers and thermal oil heaters 55

2.1 Preheating of fuel oil
2.2 Pumps, pipelines, valves and fittings
2.3 Safety equipment
2.4 Design and construction of burners
2.5 Purging of combustion chamber and flues, exhaust gas ducting
2.6 Electrical equipment
2.7 Emergency operation
2.8 Testing

3 Oil burners for hot water generators oil fired heaters and small heating appliances 57

3.1 Atomizer burners
3.2 Evaporation burners
3.3 Oil fired burners
3.4 Small oil-fired heaters for heating air

Section 5 Windlasses

1 General 59

1.1 Scope
1.2 Compliance requirements
1.3 Type of drive
1.4 Brake capacity

2 Materials 59

2.1 Approved materials
2.2 Testing of materials

3 Arrangement 59

3.1 Overload protection
3.2 Clutches
3.3 Connection with deck

4 Powering equipment 59

4.1 Electrical systems
4.2 Hydraulic systems

Section 6 Gearing

1 General 60

1.1 Application
1.2 Documentation to be submitted

2 Design of gears - Determination of the load capacity 61

2.1 General

3 Design and construction - except tooth load capacity 61
3.1 Materials
3.2 Teeth
3.3 Wheels and pinions
3.4 Shafts and bearings
3.5 Casings
3.6 Lubrication
4 Installation 63
4.1 General
4.2 Fitting of gears
5 Certification, inspection and testing 63
5.1 General
5.2 Workshop inspection and testing

Section 7 Main Propulsion Shafting

1 General 64
1.1 Application
1.2 Documents for review
2 Design and construction 64
2.1 Materials
2.2 Shafts - Scantling
2.3 Liners
2.4 Stern tube bearings
2.5 Couplings
2.6 Monitoring
3 Arrangement and installation 68
3.1 General
3.2 Protection of propeller shaft against corrosion
3.3 Shaft alignment
4 Material tests, workshop inspection and testing, certification 69
4.1 Material and non-destructive tests, workshop inspections and testing
4.2 Certification

Section 8 Propellers

1 General 70
1.1 Application
1.2 Definitions
1.3 Documents for review
2 Design and construction 72
2.1 Materials
2.2 Solid propellers - Blade thickness
2.3 Built-up propellers and controllable pitch propellers
2.4 Skewed propellers
2.5 Ducted propellers
2.6 Features

3 Arrangement and installation 74
3.1 Fitting of propeller on the propeller shaft
4 Testing and certification 77
4.1 Material tests
4.2 Testing and inspection
4.3 Certification

Section 9 Shaft Vibrations

1 General 78
1.1 Application
2 Design of systems in respect of vibrations 78
2.1 Principle
2.2 Modifications of existing plants
3 Torsional vibrations 78
3.1 Documentation to be submitted
3.2 Definitions, symbols and units
3.3 Calculation principles
3.4 Permissible limits for torsional vibration stresses in crankshaft, propulsion shafting and other transmission shafting
3.5 Permissible vibration levels in components other than shafts
3.6 Torsional vibration measurements

Section 10 Piping Systems

1 General 83
1.1 Scope and application
1.2 Documentation to be submitted
1.3 Definitions
1.4 Class of piping systems
2 General requirements for design and construction 85
2.1 General principles
2.2 Materials
2.3 Pipe minimum wall thickness
2.4 Thickness of pressure piping
2.5 Pipe connections
2.6 Hose assemblies and compensators
2.7 Shutoff devices
2.8 Outboard connections
2.9 Remote controlled valves
2.10 Pumps
2.11 Protection of piping systems against overpressure
3 Welding of steel piping 92
3.1 General
4 Bending of pipes 92
4.1 Application
4.2 Bending process
4.3 Heat treatment after bending

5 Arrangement and installation of piping systems 93
5.1 General
5.2 Location of tanks and piping system components
5.3 Passage through bulkheads or decks
5.4 Independence of lines
5.5 Prevention of progressive flooding
5.6 Provision for expansion
5.7 Supporting of the pipes
5.8 Valves, accessories and fittings
5.9 Additional arrangements for flammable fluids
6 Bilge systems 96
6.1 Application
6.2 Principle
6.3 Design of bilge systems
6.4 Draining of cargo spaces
6.5 Draining of machinery spaces
6.6 Draining of dry spaces other than cargo holds and machinery spaces
6.7 Bilge pumps
6.8 Size of bilge pipes
6.9 Bilge accessories
6.10 Bilge piping arrangement
7 Ballast systems 100
7.1 Design of ballast systems
7.2 Ballast pumping arrangement
8 Drinking water, scuppers and sanitary discharges 100
8.1 Drinking water systems
8.2 Scuppers and sanitary discharges
9 Air, sounding and overflow pipes 101
9.1 Air pipes
9.2 Sounding pipes
9.3 Overflow pipes
10 Water cooling systems 104
10.1 Application
10.2 Principle
10.3 Design of river water cooling systems
10.4 Design of fresh water cooling systems
10.5 Control and monitoring
11 Fuel oil systems 104
11.1 Application
11.2 Fuel oil tanks
11.3 Fuel tank fittings and mountings
11.4 Attachment of mountings and fittings to fuel tanks
11.5 Filling and delivery system
11.6 Tank filling and suction systems
11.7 Pipe layout
11.8 Filters
11.9 Control and monitoring

12 Lubricating oil systems 106
12.1 Application
12.2 Lubricating oil tank
12.3 Tank fittings and mountings
12.4 Capacity and construction of tanks
12.5 Lubricating oil piping
12.6 Lubricating oil pumps
12.7 Filters
13 Thermal oil systems 106
13.1 General
13.2 Pumps
13.3 Valves
13.4 Piping
13.5 Testing
13.6 Equipment of thermal oil tanks
14 Hydraulic systems 107
14.1 General
14.2 Dimensional design
14.3 Materials
14.4 Design and equipment
14.5 Testing in manufacturer's works
15 Steam systems 109
15.1 Laying out of steam systems
15.2 Steam strainers
15.3 Steam connections
16 Boiler feedwater and circulating arrangement, condensate recirculation 109
16.1 Feed water pumps
16.2 Capacity of feed water pumps
16.3 Delivery pressure of feedwater pumps
16.4 Power supply to feedwater pumps
16.5 Feedwater systems
16.6 Boiler water circulating systems
16.7 Condensate recirculation
17 Compressed air systems 110
17.1 Application
17.2 Principle
17.3 Design of starting air systems
17.4 Design of air compressors
17.5 Control and monitoring of compressed air systems
17.6 Arrangement of compressed air piping systems
18 Exhaust gas systems 111
18.1 General
18.2 Design of exhaust systems
18.3 Arrangement of exhaust piping systems
19 Bilge systems for non propelled vessels 112
19.1 Bilge system in vessels having no source of electrical power
19.2 Bilge system in vessels having a source of electrical power

20 Certification, inspection and testing of piping systems 113

20.1 Application
20.2 Type tests
20.3 Testing of materials
20.4 Hydrostatic testing of piping systems and their components
20.5 Testing of piping system components during manufacturing
20.6 Inspection and testing of piping systems

Section 11 Steering Gear

1 General 115

1.1 Application
1.2 Documentation to be submitted
1.3 Definitions
1.4 Symbols

2 Design and construction 117

2.1 General
2.2 Strength, performance and power operation of the steering gear
2.3 Control of the steering gear
2.4 Availability
2.5 Mechanical components
2.6 Hydraulic system
2.7 Electrical systems
2.8 Alarms and indications

3 Design and construction - Requirements for vessels equipped with several rudders 121

3.1 Principle
3.2 Synchronisation

4 Design and construction - Requirements for vessels equipped with alternative propulsion and steering systems without rudder 121

4.1 Principle
4.2 Use of azimuth thrusters
4.3 Use of water-jets

5 Arrangement and installation 122

5.1 General
5.2 Rudder actuator installation
5.3 Locking equipment
5.4 Rudder angle indication
5.5 Piping
5.6 Overload protections

6 Certification, inspection and testing 123

6.1 Testing of power units
6.2 Testing of materials
6.3 Inspection and tests during manufacturing
6.4 Inspection and tests after completion

Section 12 Thrusters

1 General 124

1.1 Application
1.2 Definitions
1.3 Thrusters intended for propulsion
1.4 Documentation to be submitted

2 Design and Construction 125

2.1 Materials
2.2 Transverse thrusters and azimuth thrusters
2.3 Water-jets
2.4 Alarm, monitoring and control systems

3 Testing and certification 127

3.1 Material tests
3.2 Testing and inspection
3.3 Certification

Section 13 Liquefied Gas Installations for Domestic Purposes

1 General 128

1.1 Application
1.2 General provisions
1.3 Documents for review

2 Gas installations 128

2.1 General
2.2 Gas receptacles
2.3 Supply unit
2.4 Pressure regulators
2.5 Pressure
2.6 Piping and flexible tubes
2.7 Distribution system
2.8 Gas-consuming appliances

3 Ventilation system 129

3.1 General

4 Tests and trials 130

4.1 Definition
4.2 Testing conditions

Section 14 Turbochargers

1 General 131

1.1 Application
1.2 Documentation to be submitted

2 Design and construction 132

2.1 Materials
2.2 Design
2.3 Monitoring

3 Type tests, workshop inspection and testing, certification 132

3.1 Type tests
3.2 Workshop inspections and testing
3.3 Certification

Section 15 Tests on Board

1 General 133

1.1 Application
1.2 Purpose of onboard tests
1.3 Documentation to be submitted

2 General requirements for onboard tests 133

2.1 Trials at the moorings
2.2 River trials

3 Onboard tests for machinery 133

3.1 Conditions of river trials
3.2 Navigation and manoeuvring tests
3.3 Tests of diesel engines
3.4 Test of air starting system for main and auxiliary engines
3.5 Tests of gears
3.6 Tests of main propulsion shafting and propellers
3.7 Tests of piping systems
3.8 Tests of steering gear
3.9 Tests of windlasses

4 Inspection of machinery after river trials 137

4.1 General
4.2 Diesel engines

CHAPTER 2
ELECTRICAL INSTALLATIONS

Section 1 General

1 Application 141

1.1 General
1.2 References to other regulations and standards

2 Documentation to be submitted 141

2.1

3 Definitions 141

3.1 Essential services
3.2 Earthing
3.3 Emergency condition
3.4 Hazardous areas
3.5 Certified safe-type equipment
3.6 Limited explosion risk electrical apparatus

Section 2 General Design Requirements

1 Environmental conditions 143

1.1 General
1.2 Ambient air temperatures
1.3 Humidity
1.4 Water temperatures
1.5 Inclinations
1.6 Vibrations

2 Quality of power supply 144

2.1 General

3 Electromagnetic susceptibility 144

3.1 General

4 Materials 144

4.1 General

5 Protective measures 144

5.1 Protection against electric shock
5.2 Protection against explosion hazard
5.3 Protection against combustible dust hazard

6 Construction 145

6.1 General
6.2 Degree of protection of enclosures

Section 3 System Design

1 Supply systems and characteristics of the supply 147

1.1 Supply systems
1.2 Characteristics of the supply

2 Sources of electrical power 148

2.1 General
2.2 Design
2.3 Power balance
2.4 Emergency power source on passenger vessels
2.5 DC generators
2.6 Single and 3-phase AC generators
2.7 Generator prime movers
2.8 Special rules

3 Distribution 150

3.1 Subdivision of the distribution network
3.2 Hull return
3.3 Final subcircuits
3.4 Navigation lights and signal lamps
3.5 Shore connection
3.6 Power supply to other vessels

Section 4 Rotating Machines

1 Construction 152

1.1 General

2 Testing of electrical machines 152

2.1 Workshop certificates
2.2 Scope of tests
2.3 Testing in the presence of a Surveyor

Section 5 Transformers

1 General 155

1.1 General requirements

Section 6 Semiconductor Converters

1 Constructional and operational requirements 156

1.1 Construction
1.2 Protection
1.3 Parallel operation with other power sources
1.4 Temperature rise
1.5 Insulation test

2 Requirements for uninterruptible power system (UPS) units as alternative and/or transitional power 157

2.1 Definitions
2.2 Design and construction
2.3 Location
2.4 Performance

3 Testing 157

3.1 General
3.2 Tests on converters
3.3 Additional testing and survey for uninterruptible power system (UPS) units as alternative and/or transitional power

Section 7 Storage Batteries and Chargers

1 General 159

1.1 Application

2 Design and construction of cells 159

2.1 General

3 Data plate and operation instructions 159

3.1 General requirements

4 Installation 159

4.1 General requirements

5 Battery room equipment 159

5.1 General requirements

6 Starter batteries 160

6.1 General requirements

7 Rating of storage battery chargers 160

7.1 General requirements
7.2 Tests on chargers

Section 8 Switchgear and Controlgear Assemblies

1 Switchboards 161

1.1 General rules
1.2 Distribution boards
1.3 Switchboard design assessment
1.4 Switchboard testing

2 Switchgear 162

2.1 General
2.2 Selection of switchgear
2.3 Power circuit breaker
2.4 Fuses

3 Switchgear, protective and monitoring equipment 162

3.1 General
3.2 Equipment for 3-phase AC generators
3.3 Equipment for DC generators

3.4 Special rules
3.5 Disconnection of non-essential consumers
3.6 Measuring and monitoring equipment
3.7 Transformer protection
3.8 Motor protection
3.9 Circuit protection
3.10 Storage battery protection
3.11 Protection of measuring instruments, pilot lights and control circuits
3.12 Exciter circuits
3.13 Emergency disconnecting switches

4 Control and starting equipment 165

4.1 Operating direction of handwheels and levers
4.2 Hand-operated controllers, resistors

Section 9 Cables

1 General 166

1.1

2 Choice of cables 166

2.1 Temperatures
2.2 Fire resistance
2.3 Cable sheaths
2.4 Movable connections

3 Determination of conductor cross- sections 166

3.1 General requirements
3.2 Minimum cross-sections
3.3 Hull return conductors
3.4 Protective earth wires
3.5 Neutral conductors of 3-phase systems

4 Cable overload protection 169

4.1 General requirements

5 Identification 169

5.1 General

Section 10 Miscellaneous Equipment

1 Steering gear 170

1.1 General requirements
1.2 Definitions
1.3 Design features
1.4 System requirements
1.5 Protective equipment
1.6 Indicating and monitoring equipment
1.7 Rudder control
1.8 Auto pilot systems
1.9 Rudder angle indicator

2 Lateral thrust propellers and active rudder systems 171
2.1 General
2.2 Drives
2.3 Monitoring
3 Lighting installations 172
3.1 General
3.2 Design of lighting installations
3.3 Design of lighting fixtures
3.4 Mounting of lighting fixtures
3.5 Lighting in cargo holds
3.6 Lighting of engine rooms
4 Electric heating appliances 173
4.1 General
4.2 Space heaters
4.3 Oil and water heaters
4.4 Electric ranges and cooking equipment

Section 11 Location

1 General 174
1.1 Location
1.2 Areas with a risk of explosion
2 Distribution boards 174
2.1 Distribution boards for cargo spaces and similar spaces
2.2 Distribution board for navigation lights
3 Cable runs 174
3.1 General
4 Storage batteries 174
4.1 General
4.2 Ventilation
4.3 Warning signs

Section 12 Installation

1 General 176
1.1 Protection against injury or damage caused by electrical equipment
1.2 Protection against damage to electrical equipment
1.3 Accessibility
2 Protective earthing 176
2.1 Parts to be earthed
2.2 Methods of earthing
2.3 Earthing connections
3 Installation material 177
3.1 Design and mounting
3.2 Plug connections and switches

4 Rotating machines 177
4.1
5 Semiconductor converters 177
5.1 Semiconductor power converters
6 Switchgear and controlgear assemblies 177
6.1 Main switchboards
7 Cables 178
7.1 Cable laying
7.2 Fastening of cables and wires
7.3 Tension relief
7.4 Protection against mechanical damage
7.5 Laying of cables and wires in metal conduits or enclosed ducts
7.6 Laying of cables and wires in non-metal conduits or enclosed ducts
7.7 Bulkheads and deck penetrations
7.8 Cables in refrigerated spaces
7.9 Cable laying to wheelhouses using extending cable feeds (movable loops)
7.10 Cables junctions and branches
8 Various appliances 179
8.1 Lighting fittings
8.2 Heating appliances
8.3 Heating cables and tapes or other heating elements

Section 13 Electrical Propulsion Plants

1 General 180
1.1
2 Drives 180
2.1 Basis for dimensioning
2.2 Main engines
2.3 Propulsion motors
3 Static converter installations 180
3.1
4 Control stations 180
4.1
5 Vessel’s mains 181
5.1
6 Control and regulating 181
6.1
7 Protection of the plant 181
7.1
8 Measuring, indicating, monitoring and alarms equipment 181
8.1 General
8.2 Measuring equipment and indicators
8.3 Monitoring equipment
8.4 Power reduction

9 Cables and cable installation 182
9.1 General
10 Testing and trials 182
10.1 General
10.2 Tests after installation

Section 14 Testing

1 General 183
1.1
2 Type approvals 183
2.1 General
2.2 Exceptions
3 Tests during construction 183
3.1
4 Testing during commissioning of the electrical equipment 183
4.1
5 Testing during trial voyages 184
5.1 General
5.2 Electrical propulsion plant

CHAPTER 3
AUTOMATION

Section 1 General Requirements

1 General 187

1.1 Field of application
1.2 Regulations and standards
1.3 Definitions
1.4 General

2 Documentation 188

2.1 General
2.2 Documents to be submitted
2.3 Documents for type approval of equipment

3 Environmental and supply conditions 189

3.1 General
3.2 Power supply conditions

4 Materials and construction 189

4.1 General
4.2 Type approved components

5 Alterations and additions 189

5.1

Section 2 Design Requirements

1 General 190

1.1 General requirements
1.2 Design and construction
1.3 Application of computer systems
1.4 Maintenance

2 Power supply of automation systems 190

2.1

3 Control systems 191

3.1 General
3.2 Local control
3.3 Remote control systems
3.4 Automatic control systems

4 Machinery control and monitoring installations 191

4.1 Open loop control
4.2 Closed loop control
4.3 Integration of systems for essential equipment
4.4 Control of machinery installations

5 Alarm systems 194
5.1 General requirements
5.2 Alarm functions
5.3 Alarms arrangements
6 Safety devices and systems 195
6.1 Safety devices
6.2 Safety systems
6.3 Testing

Section 3 Computer Based Systems

1 General 197
1.1 Scope
1.2 References to other Rules and Regulations
1.3 Requirements applicable to computer systems
2 Requirement classes 197
2.1 General requirements
2.2 Risk parameters
2.3 Measures required to comply with the requirement class
3 System configuration 199
3.1 General requirements
3.2 Power supply
3.3 Hardware
3.4 Software
3.5 Data communication links
3.6 Integration of systems
3.7 User interface
3.8 Input devices
3.9 Output devices
3.10 Graphical user interface
4 Testing 200
4.1 General

Section 4 Constructional Requirements

1 General 201
1.1 General
1.2 Materials
1.3 Component design
2 Power electronic systems 201
2.1 General
2.2 Construction
2.3 Rating and design
2.4 Cooling
2.5 Control and monitoring
2.6 Protection equipment
3 Pneumatic systems 202
3.1 General

4 Hydraulic systems 202
4.1 General
5 Automation consoles 202
5.1 General
5.2 Indicating instruments
5.3 VDU's and keyboards

Section 5 Installations Requirements

1 General 203
1.1
2 Sensors and components 203
2.1 General
2.2 Temperature elements
2.3 Pressure elements
2.4 Level switches
3 Cables 203
3.1 Installation
3.2 Cable terminations
4 Pipes 204
4.1
5 Automation consoles 204
5.1 General

Section 6 Testing

1 General 205
1.1 General
2 Type approval 205
2.1 General
3 Acceptance testing 205
3.1 General
3.2 Hardware testing
3.3 Software testing
4 On board tests 205
4.1 General

CHAPTER 4
FIRE PROTECTION, DETECTION AND EXTINCTION

Section 1 General

1 Application 209

1.1 General
1.2 Statutory Regulations
1.3 Applicable requirements depending on vessel type
1.4 Documentation to be submitted
1.5 Type approved products

2 Definitions 210

2.1 Accommodation spaces
2.2 A class divisions
2.3 B class divisions
2.4 Fire divisions other than steel
2.5 Control centre
2.6 Fire Test Procedures Code
2.7 Galleys
2.8 Lounge
2.9 Low flame-spread
2.10 Machinery spaces of category A
2.11 Machinery spaces
2.12 Main fire zones
2.13 Muster areas
2.14 Non-combustible material
2.15 Not readily ignitable material
2.16 Passenger areas
2.17 Steel or other equivalent material
2.18 Service spaces
2.19 Stairwell
2.20 Standard fire test
2.21 Store room

Section 2 Prevention of Fire

1 Probability of ignition 213

1.1 Arrangements for fuel oil, lubrication oil and other flammable oils
1.2 Arrangements for gaseous fuel for domestic purposes
1.3 Installation of boilers
1.4 Insulation of hot surfaces
1.5 Protective measures against explosion
1.6 Miscellaneous items of ignition sources and ignitability

2 Fire growth potential 213

2.1 Control of flammable liquid supply
2.2 Control of air supply
2.3 Fire protection materials

3 Smoke generation potential and toxicity 214

3.1 Paints, varnishes and other finishes

Section 3 Detection and Alarm

1 General 215

1.1 Minimum number of detectors
1.2 Initial and periodical tests
1.3 Detector requirements
1.4 System control requirements

2 Protection of machinery spaces 215

2.1 Installation
2.2 Design

3 Protection of accommodation and service spaces 215

3.1 Smoke detectors in stairways, corridors and escape route

Section 4 Fire Fighting

1 Water supply systems 216

1.1 General
1.2 Fire mains and hydrants
1.3 Fire pumps
1.4 Fire hoses and nozzles
1.5 Non propelled vessels

2 Portable fire extinguishers 216

2.1 Extinguishing media and weights of charge
2.2 Arrangement of fire extinguishers

3 Automatic pressure water spraying system (sprinkler system) 217

3.1 General
3.2 Pressure water tanks
3.3 Pressure water spraying pumps
3.4 Location
3.5 Water supply
3.6 Power supply
3.7 Piping, valves and fittings
3.8 Spray nozzles
3.9 Indicating and alarm systems

4 Fixed fire extinguishing systems 219

4.1 Extinguishing agents
4.2 Ventilation, air intake
4.3 Fire alarm system
4.4 Piping system
4.5 Triggering device
4.6 Alarm device
4.7 Pressurized tanks, fittings and piping
4.8 Quantity of extinguishing agent
4.9 Fire extinguishing system operating with CO2
4.10 Fire extinguishing system operating with HFC-227 ea (heptafluoropropane)
4.11 Fire extinguishing system operating with IG-541
4.12 Fire extinguishing system operating with FK-5-1-12
4.13 Fire extinguishing system operating with water
4.14 Fire extinguishing system operating with K2CO3

Section 5 Escape

1 General 223

1.1

2 Means of escape from control centres, accommodation spaces and service spaces 223

2.1 General requirements

2.2 Escape arrangements

3 Means of escape from machinery spaces 223

3.1 Escape arrangements

Part C
Machinery, Electricity and Fire

Chapter 1
MACHINERY AND SYSTEMS

SECTION 1 GENERAL REQUIREMENTS

SECTION 2 DIESEL ENGINES

SECTION 3 PRESSURE EQUIPMENT

SECTION 4 OIL FIRING EQUIPMENT

SECTION 5 WINDLASSES

SECTION 6 GEARING

SECTION 7 MAIN PROPULSION SHAFTING

SECTION 8 PROPELLERS

SECTION 9 SHAFT VIBRATIONS

SECTION 10 PIPING SYSTEMS

SECTION 11 STEERING GEAR

SECTION 12 THRUSTERS

SECTION 13 LIQUEFIED GAS INSTALLATIONS FOR DOMESTIC PURPOSES

SECTION 14 TURBOCHARGERS

SECTION 15 TESTS ON BOARD

SECTION 1 GENERAL REQUIREMENTS

1 General

1.1 Application

1.1.1 Part C, Chapter 1 applies to the design, construction, installation, tests and trials of main propulsion and essential auxiliary machinery systems and associated equipment, boilers and pressure vessels and piping systems installed on board classed vessels, as indicated in each Section of this Chapter, as far as class is concerned.

1.2 Additional requirements

1.2.1 Additional requirements for machinery are given in Part D, for the assignment of the type and service notations and additional class notations.

1.3 Documentation to be submitted

1.3.1 The drawings and documents requested in the relevant Sections of this Chapter are to be submitted to the Society for review.

1.4 Machinery space of category A

1.4.1 Machinery spaces of category A are those spaces and trunks to such spaces which contain:

- internal combustion machinery used for main propulsion, or
- internal combustion machinery used for purposes other than main propulsion where such machinery has in the aggregate a total power output of not less than 375 kW, or
- any oil fired boiler or fuel oil unit, or
- gas generators, incinerators, waste disposal units, etc., which use oil fired equipment

1.5 Machinery spaces

1.5.1 Machinery spaces are all machinery spaces of Category A and all other spaces containing propulsion machinery, boilers, fuel oil units, steam and internal combustion engines, generators and major electrical machinery, oil filling stations, refrigerating, stabilising, ventilation and air conditioning machinery, and similar spaces, and trunks to such spaces.

1.6 Essential services

1.6.1 Essential services are defined in Pt A, Ch 1, Sec 1, [1.3].

2 Design and construction

2.1 General

2.1.1 The machinery, boilers and other pressure vessels, associated piping systems and fittings are to be of a design and construction adequate for the service for which they are intended and shall be so installed and protected as to reduce to a minimum any danger to persons on board, due regard being paid to moving parts, hot surfaces and other hazards.

The design is to have regard to materials used in construction, the purpose for which the equipment is intended, the working conditions to which it will be subjected and the environmental conditions on board.

2.2 Materials, welding and testing

2.2.1 General

Materials, welding and testing procedures are to be in accordance with the requirements of NR216 Materials and Welding and those given in the other Sections of this Chapter. In addition, for machinery components fabricated by welding the requirements given in [2.2.2] apply.

2.2.2 Welded machinery components

Welding processes are to be approved and welders certified by the Society in accordance with NR216 Materials and Welding.

References to welding procedures adopted are to be clearly indicated on the plans submitted for review.

Joints transmitting loads are to be either:

- full penetration butt-joints welded on both sides, except when an equivalent procedure is approved, or
- full penetration T- or cruciform joints.

For joints between plates having a difference in thickness greater than 3 mm, a taper having a length of not less than 4 times the difference in thickness is required. Depending on the type of stress to which the joint is subjected, a taper equal to three times the difference in thickness may be accepted.

T-joints on scalloped edges are not permitted.

Lap-joints and T-joints subjected to tensile stresses are to have a throat size of fillet welds equal to 0,7 times the thickness of the thinner plate on both sides.

In the case of welded structures including cast pieces, the latter are to be cast with appropriate extensions to permit connection, through butt-welded joints, to the surrounding structures, and to allow any radiographic and ultrasonic examinations to be easily carried out.

Where required, preheating and stress relieving treatments are to be performed according to the welding procedure specification.

2.2.3 Non-destructive testing suppliers

In case of non-destructive testing carried out by an independent company from the manufacturer or shipyard, such company has to comply with the requirements set out in NR669 Recognition of non-destructive testing suppliers.

2.3 Vibrations

2.3.1 Special consideration (see Ch 1, Sec 9) is to be given to the design, construction and installation of propulsion machinery systems and auxiliary machinery so that any mode of their vibrations shall not cause undue stresses in this machinery in the normal operating ranges.

2.4 Operation in inclined position

2.4.1 Main propulsion machinery and all auxiliary machinery essential to the propulsion and the safety of the vessel are, as fitted in the vessel, to be designed to operate when the vessel is upright and when inclined at any angle of list either way and trim by bow or stern as stated in Tab 1.

Machinery with a horizontal rotation axis is generally to be fitted on board with such axis arranged alongships. If this is not possible, the manufacturer is to be informed at the time the machinery is ordered.

Table 1 : Permanent inclination of vessel

Installations, components	Angle of inclination (degrees) **(1)**	
	Athwartship	Fore and aft
Main and auxiliary machinery **(2)**	12	5

(1) Athwartship and fore-and-aft inclinations may occur simultaneously.

(2) Higher angle values may be required depending on vessel operating conditions

Table 2 : Ambient conditions

AIR TEMPERATURE	
Location, arrangement	Temperature range (°C)
In enclosed spaces	between 0 and +40 (+45 in tropical zone) **(1)**
On machinery components, boilers In spaces subject to higher or lower temperatures	according to specific local conditions
On exposed decks	between –20 and +40 (+45 in tropical zone)

WATER TEMPERATURE	
Coolant	Temperature (°C)
River water or, if applicable, river water at charge air coolant inlet	up to +25 in general up to +32 in tropical zone

(1) Different temperatures may be accepted by the Society in the case of vessels intended for restricted service.

2.5 Ambient conditions

2.5.1 Machinery and systems covered by the Rules are to be designed to operate properly under the ambient conditions specified in Tab 2, unless otherwise specified in each Section of this Chapter.

2.6 Power of machinery

2.6.1 Unless otherwise stated in each Section of this Chapter, where scantlings of components are based on power, the values to be used are determined as follows:

- for main propulsion machinery, the power/rotational speed for which classification is requested
- for auxiliary machinery, the power/rotational speed which is available in service.

2.7 Astern power

2.7.1 Sufficient power for going astern is to be provided to secure proper control of the vessel in all normal circumstances.

In order to maintain sufficient manoeuvrability and secure control of the vessel in all normal circumstances, the main propulsion machinery is to be capable of reversing the direction of thrust so as to bring the vessel to rest from the maximum service speed. The main propulsion machinery is to be capable of maintaining in free route astern at least 70% of the ahead revolutions.

For main propulsion systems with reversing gears or controllable pitch propellers, running astern is not to lead to an overload of propulsion machinery.

During the river trials, the ability of the main propulsion machinery to reverse the direction of thrust of the propeller is to be demonstrated and recorded (see also Ch 1, Sec 15, [3.2]).

2.8 Safety devices

2.8.1 Where risk from overspeeding of machinery exists, means are to be provided to ensure that the safe speed is not exceeded.

2.8.2 Where main or auxiliary machinery including pressure vessels or any parts of such machinery are subject to internal pressure and may be subject to dangerous overpressure, means shall be provided, where practicable, to protect against such excessive pressure.

2.8.3 Main internal combustion propulsion machinery and auxiliary machinery shall be provided with automatic shut-off arrangements in the case of failures, such as lubricating oil supply failure, which could lead rapidly to complete breakdown, serious damage or explosion.

The Society may permit provisions for overriding automatic shut-off devices.

2.9 Fuels

2.9.1 Fuel oils

Fuel oils used for engines and boilers are, in general, to have a flash point (determined using the closed cup test) of not less than 55°C.

2.9.2 Natural gas

Natural gas may be used as fuel for boilers or propulsion engines for installation specially approved in the scope of service features **Dualfuel** or **Gasfuel** as defined in Pt A, Ch 1, Sec 3, [1.3.5] and subject to the corresponding requirements.

3 Arrangement and installation on board

3.1 General

3.1.1 Provision shall be made to facilitate cleaning, inspection and maintenance of main propulsion and auxiliary machinery, including boilers and pressure vessels.

Easy access to the various parts of the propulsion machinery is to be provided by means of metallic ladders and gratings fitted with strong and safe handrails.

Spaces containing main and auxiliary machinery are to be provided with adequate lighting and ventilation.

3.2 Floors

3.2.1 Floor plating and gratings in machinery spaces are to be metallic, divided into easily removable panels.

The floor plating of normal passageways in machinery spaces shall be made of steel.

3.3 Bolting down

3.3.1 Bedplates of machinery are to be securely fixed to the supporting structures by means of foundation bolts which are to be distributed as evenly as practicable and of a sufficient number and size so as to ensure a perfect fit.

Where the bedplates bear directly on the inner bottom plating, the bolts are to be fitted with suitable gaskets so as to ensure a tight fit and are to be arranged with their heads within the double bottom.

Continuous contact between bedplates and foundations along the bolting line is to be achieved by means of chocks of suitable thickness, carefully arranged to ensure a complete contact.

The same requirements apply to thrust block and shaft line bearing foundations.

Particular care is to be taken to obtain a perfect levelling and general alignment between the propulsion engines and their shafting.

3.3.2 Chocking resins are to be type approved.

3.4 Safety devices on moving parts

3.4.1 Suitable protective devices are to be provided in way of moving parts (flywheels, couplings, etc.) in order to avoid injuries to personnel.

3.5 Gauges

3.5.1 All gauges are to be grouped, as far as possible, near each manoeuvring position; in any event, they are to be clearly visible.

3.6 Ventilation in machinery spaces

3.6.1 Machinery spaces are to be sufficiently ventilated so as to ensure that when machinery or boilers therein are operating at full power in all weather conditions, including heavy weather, a sufficient supply of air is maintained to the spaces for the operation of the machinery.

This sufficient amount of air is to be supplied through suitably protected openings arranged in such a way that they can be used in all weather conditions.

Special attention is to be paid both to air delivery and extraction and to air distribution in the various spaces. The quantity and distribution of air are to be such as to satisfy machinery requirements for developing maximum continuous power.

The ventilation is to be so arranged as to prevent any accumulation of flammable gases or vapours.

3.7 Hot surfaces and fire protection

3.7.1 Surfaces, having temperature exceeding 60°C, with which the crew are likely to come into contact during operation are to be suitably protected or insulated.

Surfaces of machinery with temperatures above 220°C, e.g. steam, thermal oil and exhaust gas lines, silencers, exhaust gas boilers and turbochargers, are to be effectively insulated with non-combustible material (see Ch 4, Sec 1, [2.14] for definition) or equivalently protected to prevent the ignition of combustible materials coming into contact with them. Where the insulation used for this purpose is oil absorbent or may permit the penetration of oil, the insulation is to be encased in steel sheathing or equivalent material.

Fire protection, detection and extinction is to comply with the requirements of Part C, Chapter 4.

3.8 Machinery remote control, alarms and safety systems

3.8.1 For remote control systems of main propulsion machinery and essential auxiliary machinery and relevant alarms and safety systems, see Ch 1, Sec 2, [2.7] and Pt D, Ch 2, Sec 8, for additional class notation **AUT-UMS.**

4 Tests and trials

4.1 Works tests

4.1.1 Equipment and its components are subjected to works tests which are detailed in the relevant Sections of this Chapter.

Where such tests cannot be performed in the workshop, the Society may allow them to be carried out on board, provided this is not judged to be in contrast either with the general characteristics of the machinery being tested or with particular features of the on board installation. In such cases, the Surveyor is to be informed in advance and the tests are to be carried out in accordance with the requirements of NR216 Materials and Welding relative to incomplete tests.

All boilers, all parts of machinery, all steam, hydraulic, pneumatic and other systems and their associated fittings which are under internal pressure shall be subjected to appropriate tests including a pressure test before being put into service for the first time as detailed in the other Sections of this Chapter.

4.2 Tests on board

4.2.1 Trials on board of machinery are detailed in Ch 1, Sec 15.

SECTION 2 DIESEL ENGINES

1 General

1.1 Application

1.1.1 Diesel engines listed below are to be designed, constructed, installed, tested and certified in accordance with the requirements of this Section, under the supervision and to the satisfaction of the Society's Surveyors:

a) main propulsion engines, when the power exceeds 220 kW per engine

b) engines driving electric generators, including emergency generators, when they develop a power of 110 kW and over

c) engines driving other auxiliaries essential for safety and navigation and cargo pumps in tankers, when they develop a power of 110 kW and over.

All other engines are to be designed and constructed according to sound marine practice, with the equipment required in [2.3.2], and delivered with the relevant works' certificate (see 216 Materials and Welding, Ch 1, Sec 1, [4.2.3]).

In addition to the requirements of this Section, those given in Ch 1, Sec 1 apply.

1.2 Documentation to be submitted

1.2.1 The Manufacturer is to submit to the Society the documents listed in Tab 1 for engine type approval.

Plans listed under items 2 and 3 in Tab 1 are also to contain details of the lubricating oil sump in order to demonstrate compliance with Ch 1, Sec 1, [2.4].

Where changes are made to an engine type for which the documents listed in Tab 1 have already been examined or approved, the engine Manufacturer is to resubmit to the Society for consideration and review only those documents concerning the engine parts which have undergone substantial changes.

If the engines are manufactured by a licensee, the licensee is to submit, for each engine type, a list of all the drawings specified in Tab 1, indicating for each drawing the relevant number and revision status from both licensor and licensee.

Where the licensee proposes design modifications to components, the associated documents are to be submitted by the licensee to the Society for review or for information purposes. In the case of significant modifications, the licensee is to provide the Society with a statement confirming the licensor's acceptance of the changes. In all cases, the licensee is to provide the Surveyor entrusted to carry out the testing, with a complete set of the documents specified in Tab 1.

Table 1 : Documentation to be submitted

No.	I/A **(1)**	Document	Document details
1	I	Engine particulars and data for calculation of crankshafts as per NR467, Pt C, Ch 1, App 1	–
2	I	Engine transverse cross-section	Max inclination angles, oil surface lines, oil suction strum position
3	I	Engine longitudinal section	Max inclination angles, oil surface lines, oil suction strum position
4	I / A	Bedplate or crankcase, cast or welded. For welded bedplates or cranks, welding details and instructions	Design of welded joints, electrodes used, welding sequence, heat treatment, non-destructive examinations
5	A	Thrust bearing assembly **(2)**	–
6	I / A	Thrust bearing bedplate, cast or welded. For welded bedplates or cranks, welding details and instructions **(3)**	Design of welded joints, electrodes used, welding sequence, heat treatment, non-destructive examinations
7	I / A	Frame/column, cast or welded with welding details and instructions **(4)**	Design of welded joints, electrodes used, welding sequence, heat treatment, non-destructive examinations
8	I	Tie rod	–
9	I	Cylinder cover, assembly	–
10	I	Cylinder jacket or engine block **(5)**	–
11	I	Cylinder liner **(5)**	–
12	A	Crankshaft, details, for each cylinder number	–
13	A	Crankshaft, assembly, for each cylinder number	–

No.	I/A **(1)**	Document	Document details
14	A	Thrust shaft or intermediate shaft (if integral with engine)	–
15	A	Coupling bolts	–
16	A	Counterweights (if not integral with crankshaft), with associated fastening bolts	Bolt fastening instructions
17	I	Connecting rod	–
18	I	Connecting rod, assembly **(5)**	Bolt fastening instructions
19	I	Crosshead, assembly **(5)**	–
20	I	Piston rod, assembly **(5)**	–
21	I	Piston, assembly	–
22	I	Camshaft drive, assembly	–
23	A	Material specifications of main parts of engine, with detailed information on: - non-destructive tests, and - pressure tests **(6)**	Required for items 4, 7, 8, 9, 10, 11, 12, 15, 18, 21, including acceptable defects and repair procedures. Required for items 4, 7, 9, 10, 11, 21 and for injection pumps and exhaust manifold
24	A	Arrangement of foundation bolts (for main engines only)	–
25	A	Schematic layout or other equivalent documents for starting air system on the engine **(7)**	–
26	A	Schematic layout or other equivalent documents for fuel oil system on the engine **(7)**	–
27	A	Schematic layout or other equivalent documents for lubricating oil system on the engine **(7)**	–
28	A	Schematic layout or other equivalent documents for cooling water system on the engine **(7)**	–
29	A	Schematic diagram of engine control and safety system on the engine **(7)**	List, specification and layout of sensors, automatic controls and other control and safety devices
30	A	Schematic layout or other equivalent documents of hydraulic system (for valve lift) on the engine	–
31	I	Shielding and insulation of exhaust pipes, assembly	–
32	A	Shielding of high pressure fuel pipes, assembly	Recovery and leak detection devices
33	A	Crankcase explosion relief valves **(8)**	Volume of crankcase and other spaces (camshaft drive, scavenge, etc.)
34	I	Operation and service manuals **(9)**	–
35	A	Type test program and type test report	–
36	A	High pressure parts for fuel oil injection system **(10)**	–

(1) A = to be submitted for review

I = to be submitted for information.

Where two indications I / A are given, the first refers to cast design and the second to welded design.

(2) To be submitted only if the thrust bearing is integral with the engine and not integrated in the engine bedplate.

(3) The weld procedure specification is to include details of pre and post weld heat treatment, weld consumables and fit-up conditions.

(4) Only for one cylinder.

(5) To be submitted only if sufficient details are not shown on the engine transverse and longitudinal cross-sections.

(6) For comparison with NR216 Materials and Welding, NDT and pressure testing as applicable.

(7) Dimensions and materials of pipes, capacity and head of pumps and compressors and any additional functional information are to be included. The layout of the entire system is also required, if this is part of the goods to be supplied by the engine Manufacturer. Where engines incorporate electronic control systems a failure mode and effects analysis (FMEA) is to be submitted to demonstrate that failure of an electronic control system will not result in the loss of essential services for the operation of the engine and that operation or the engine will not be lost or degraded beyond an acceptable performance criteria or the engine.

(8) Required only for engines with cylinder bore of 200 mm and above or crankcase gross volume of 0,6 m^3 and above.

(9) Operation and service manuals are to contain maintenance requirements (servicing and repair) including derails of any special tools and gauges that are to be used with their fitting/settings together with any test requirements on completion of maintenance.

(10) The documentation to contain specification of pressures, pipe dimensions and materials.

1.3 Definitions

1.3.1 Engine type

In general, the type of an engine is defined by the following characteristics:

- the cylinder diameter
- the piston stroke
- the method of injection (direct or indirect injection)
- the kind of fuel (liquid, gaseous or dual-fuel)
- the working cycle (4-stroke, 2-stroke)
- the gas exchange (naturally aspirated or supercharged)
- the maximum continuous power per cylinder at the corresponding speed and/or brake mean effective pressure corresponding to the above-mentioned maximum continuous power
- the method of pressure charging (pulsating system or constant pressure system)
- the charging air cooling system (with or without intercooler, number of stages, etc.)
- the cylinder arrangement (in-line or V-type).

1.3.2 Engine power

The maximum continuous power is the maximum power at ambient reference conditions (see [1.3.3]) which the engine is capable of delivering continuously, at nominal maximum speed, in the period of time between two consecutive overhauls.

Power, speed and the period of time between two consecutive overhauls are to be stated by the Manufacturer and agreed by the Society.

The rated power is the maximum power at ambient reference conditions (see [1.3.3]) which the engine is capable of delivering as set after works trials (fuel stop power) at the maximum speed allowed by the governor.

The rated power for engines driving electric generators is the nominal power, taken at the net of overload, at ambient reference conditions (see [1.3.3]), which the engine is capable of delivering as set after the works trials (see [4]).

1.3.3 Ambient reference conditions

The power of engines as per [1.1.1] a), b) and c) is to be referred to the following conditions:

- barometric pressure = 1 bar
- relative humidity = 60%
- ambient air temperature = 40°C in general, and 45°C in tropical zone
- river water temperature (and temperature at inlet of river water cooled charge air cooler) = 25°C in general, and 32°C in tropical zone.

The engine Manufacturer is not expected to provide the above ambient conditions at a test bed. The rating is to be adjusted according to a recognised standard accepted by the Society.

1.3.4 Same type of engines

Two diesel engines are considered to be of the same type when they do not substantially differ in design and construction characteristics, such as those listed in the engine type definition as per [1.3.1], it being taken for granted that the documentation concerning the essential engine components listed in [1.2] and associated materials employed has been submitted, examined and, where necessary, approved by the Society.

1.3.5 Substantive modifications or major modifications or major changes

Design modifications, which lead to alterations in the stress levels, operational behaviour, fatigue life or an effect on other components or characteristics of importance such as emissions.

1.3.6 Low-Speed Engines means diesel engines having a rated speed of less than 300 rpm.

Medium-Speed Engines means diesel engines having a rated speed of 300 rpm and above, but less than 1400 rpm.

High-Speed Engines means diesel engines having a rated speed of 1400 rpm and above.

2 Design and construction

2.1 Materials and welding

2.1.1 Crankshaft materials

In general, crankshafts are to be of forged steel having a tensile strength not less than 400 N/mm^2 and not greater than 1000 N/mm^2.

The use of forged steels of higher tensile strength is subject to special consideration by the Society in each case.

The Society, at its discretion and subject to special conditions (such as restrictions in vessel navigation), may accept crankshafts made of cast carbon steel, cast alloyed steel of appropriate quality and manufactured by a suitable procedure having a tensile strength as follows:

a) between 400 N/mm^2 and 560 /mm^2 for cast carbon steel

b) between 400 N/mm^2 and 700 N/mm^2 for cast alloyed steel.

The Society, at its discretion and subject to special conditions (such as restrictions in vessel navigation), may also accept crankshafts made of cast iron for mass produced engines of a nominal power not exceeding 110 kW with a significative in-service behaviour either in marine or industry. The cast iron is to be of "SG" type (spheroidal graphite) of appropriate quality and manufactured by a suitable procedure.

2.1.2 Welded frames and foundations

Steels used in the fabrication of welded frames and bedplates are to comply with the requirements of NR216 Materials and Welding.

Welding is to be in accordance with the requirements of Ch 1, Sec 1, [2.2].

2.2 Crankshaft

2.2.1 Check of the scantling

The check of crankshaft strength is to be carried out in accordance with NR467, Pt C, Ch 1, App 1.

2.3 Crankcase

2.3.1 Crankcase construction and crankcase doors are to be of sufficient strength to withstand anticipated crankcase pressures that may arise during a crankcase explosion taking into account the installation of required explosion relief valves. Crankcase doors are to be fastened sufficiently securely for them not be readily displaced by a crankcase explosion.

2.3.2 Crankcase arrangements and fittings are to comply with applicable requirements of NR467, Part C, Chapter 1.

2.4 Systems

2.4.1 General

In addition to the requirements of the present Sub-article, those given in Ch 1, Sec 10 are to be satisfied.

Flexible hoses in the fuel and lubricating oil system are to be limited to the minimum and are to be type approved.

2.4.2 Fuel oil system

Relief valves discharging back to the suction of the pumps or other equivalent means are to be fitted on the delivery side of the pumps.

In fuel oil systems for propulsion machinery, filters are to be fitted and arranged so that an uninterrupted supply of filtered fuel oil is ensured during cleaning operations of the filter equipment, except when otherwise stated in Ch 1, Sec 10.

a) All external high pressure fuel delivery lines between the high pressure fuel pumps and fuel injectors are to be protected with a shielded piping system capable of containing fuel from a high pressure line failure.

   A shielded pipe incorporates an outer pipe into which the high pressure fuel pipe is placed forming a permanent assembly.

   The shielded piping system is to include a means for collection of leakages and arrangements are to be provided for an alarm to be given in the event of a fuel line failure.

   If flexible hoses are used for shielding purposes, these are to be approved by the Society.

   When in fuel oil return piping the pulsation of pressure with peak to peak values exceeds 20 bar, shielding of this piping is also required as above

b) For vessels classed for restricted navigation, the requirements under a) may be relaxed at the Society's discretion.

2.4.3 Lubricating oil system

Efficient filters are to be fitted in the lubricating oil system when the oil is circulated under pressure.

In such lubricating oil systems for propulsion machinery, filters are to be arranged so that an uninterrupted supply of filtered lubricating oil is ensured during cleaning operations of the filter equipment, except when otherwise stated in Ch 1, Sec 10.

Relief valves discharging back to the suction of the pumps or other equivalent means are to be fitted on the delivery side of the pumps.

The relief valves may be omitted provided that the filters can withstand the maximum pressure that the pump may develop.

Where necessary, the lubricating oil is to be cooled by means of suitable coolers.

2.4.4 Charge air system

a) Requirements relevant to design, construction, arrangement, installation, tests and certification of exhaust gas turbochargers are to comply with Ch 1, Sec 14.

b) When two-stroke propulsion engines are supercharged by exhaust gas turbochargers which operate on the impulse system, provision is to be made to prevent broken piston rings entering turbocharger casings and causing damage to blades and nozzle rings.

2.5 Starting air system

2.5.1 The requirements given in [3.1] apply.

2.6 Control and safety devices

2.6.1 Governors of main and auxiliary engines

Each engine, except the auxiliary engines for driving electric generators for which [2.6.4] applies, is to be fitted with a speed governor so adjusted that the engine does not exceed the rated speed by more than 15%.

2.6.2 Overspeed protective devices of main and auxiliary engines

In addition to the speed governor, each:

- main propulsion engine having a rated power of 220 kW and above, which can be declutched or which drives a controllable pitch propeller, and
- auxiliary engine having a rated power of 220 kW and above, except those for driving electric generators, for which [2.6.4] item f) applies

is to be fitted with a separate overspeed protective device so adjusted that the engine cannot exceed the rated speed n by more than 20%; arrangements are to be made to test the overspeed protective device.

Equivalent arrangements may be accepted subject to special consideration by the Society in each case.

The overspeed protective device, including its driving mechanism or speed sensor, is to be independent of the governor.

2.6.3 Use of electronic governors

a) Type approval

   Electronic governors and their actuators are to be type approved by the Society.

b) Electronic governors for main propulsion engines

   If an electronic governor is fitted to ensure continuous speed control or resumption of control after a fault, an additional separate governor is to be provided unless the engine has a manually operated fuel admission control system suitable for its control.

   A fault in the governor system is not to lead to sudden major changes in propulsion power or direction of propeller rotation.

Alarms are to be fitted to indicate faults in the governor system.

The acceptance of electronic governors not in compliance with the above requirements will be considered by the Society on a case by case basis, when fitted on vessels with two or more main propulsion engines.

the power distribution system is designed such that the declared maximum step loading is not exceeded the maximum step load is declared and demonstrated

c) Electronic governors forming part of a remote control system

When electronic speed governors of main internal combustion engines form part of a remote control system, they are to comply with the following conditions:

- If lack of power to the governor may cause major and sudden changes in the present speed and direction of thrust of the propeller, back up power supply is to be provided;
- Local control of the engines is always to be possible even in the case of failure in any part of the automatic or remote control systems. To this purpose, from the local control position it is to be possible to disconnect the remote signal, bearing in mind that the speed control according to [2.6.1] is not available unless an additional separate governor is provided for such local mode of control.

d) Electronic governors for auxiliary engines driving electric generators

In the event of a fault in the electronic governor system the fuel admission is to be set to "zero".

Alarms are to be fitted to indicate faults in the governor system.

The acceptance of electronic governors fitted on engines driving emergency generators will be considered by the Society on a case by case basis.

2.6.4 Governors for auxiliary engines driving electric generators

a) Prime movers for driving generators of the main and emergency sources of electrical power are to be fitted with a speed governor which will prevent transient frequency variations in the electrical network in excess of ±10% of the rated frequency with a recovery time to steady state conditions not exceeding 5 seconds, when the maximum electrical step load is switched on or off.

In the case when a step load equivalent to the rated output of a generator is switched off, a transient speed variation in excess of 10% of the rated speed may be acceptable, provided this does not cause intervention of the overspeed device as required in item f).

b) At all loads between no load and rated power, the permanent speed variation is not to be more than 5% of the rated speed.

c) Prime movers are to be selected in such a way that they meet the load demand within the vessel's mains and, when running at no load, can satisfy the requirement in item a) above if suddenly loaded to 50% of the rated power of the generator, followed by the remaining 50% after an interval sufficient to restore speed to steady state. Steady state conditions (see Note 1) are to be achieved in not more than 5 s (see Note 1).

d) Application of the electrical load in more than 2 load steps can only be allowed if the conditions within the vessel's mains permit the use of those auxiliary engines which can only be loaded in more than 2 load steps (see Fig 1 for guidance on 4-stroke diesel engines expected maximum possible sudden power increase) and provided that this is already allowed for in the designing stage.

This is to be verified in the form of system specifications to be approved and to be demonstrated at vessel's trials. In this case, due consideration is to be given to the power required for the electrical equipment to be automatically switched on after blackout and to the sequence in which it is connected.

This also applies to generators to be operated in parallel and where the power is to be transferred from one generator to another, in the event that any one generator is to be switched off.

e) Emergency generator sets must satisfy the governor conditions as per items a) and b) when:

- their total consumer load is applied suddenly, or
- their total consumer load is applied in steps, subject to:
  - the total load is supplied within 45 seconds since power failure on the main switchboard
  - the maximum step load is declared and demonstrated
  - the power distribution system is designed such that the declared maximum step loading is not exceeded the maximum step load is declared and demonstrated
  - the compliance of time delays and loading sequence with the above is to be demonstrated at vessel's trials

f) In addition to the speed governor, auxiliary engines of rated power equal to or greater than 220 kW driving electric generators are to be fitted with a separate overspeed protective device, with a means for manual tripping, adjusted so as to prevent the rated speed from being exceeded by more than 15%.

This device is to automatically shut down the engine.

g) For alternating current generating sets operating in parallel, the governing characteristics of the prime movers are to be such that, within the limits of 20% and 100% total load, the load on any generating set will not normally differ from its proportionate share of the total load by more than 15% of the rated power in kW of the largest machine or 25% of the rated power in kW of the individual machine in question, whichever is the lesser.

For alternating current generating sets intended to operate in parallel, facilities are to be provided to adjust the governor sufficiently finely to permit an adjustment of load not exceeding 5% of the rated load at normal frequency.

Note 1: Steady state conditions are those at which the envelope of speed variation does not exceed ± 1% of the declared speed at the new power.

Figure 1 : Limiting curves for loading 4-stroke diesel engines step by step from no load to rated power as a function of the brake mean effective pressure (Mep)

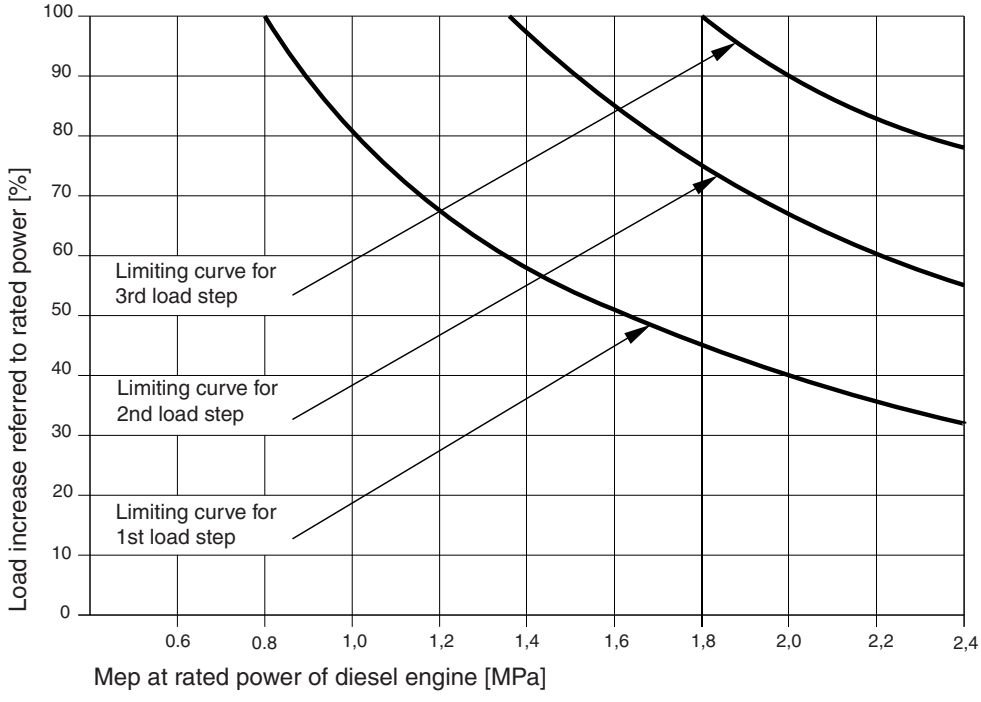

2.7 Control and monitoring

2.7.1 General

Diesel engines are to be equipped with monitoring equipment in compliance with Ch 3, Sec 2.

In addition, vessels assigned **AUT-UMS** additional notation are to comply with the requirements of Pt D, Ch 2, Sec 8.

The alarms are to be visual and audible.

The indicators are to be fitted at a normally attended position (on the engine or at the local control station).

2.7.2 Control station - Definition

A control station is a group of control and monitoring devices by means of which an operator can control and verify the performance of equipment.

2.7.3 Main engines room control station

As a minimum requirement, the engine room control station is to be equipped with the following main engine indicators, which are to be clearly and logically arranged:

- engine speed indicator
- lubricating oil pressure at engine inlet
- cylinder cooling water pressure
- starting air pressure
- charge air pressure
- control air pressure at engine inlet
- shaft revolution indicator.

Indicators are to be provided for the following on the control station and/or directly on the engine:

- lubricating oil temperature
- coolant temperature
- fuel temperature at engine inlet only for engines running on heavy fuel oil
- exhaust gas temperature, wherever the dimensions permit, at each cylinder outlet and at the turbocharger inlet/outlet.

In the case of geared transmissions or controllable pitch propellers, the scope of the control equipment is to be extended accordingly.

On the pressure gauges the permissible pressures, and on the tachometers any critical speed ranges, are to be indicated in red.

A machinery alarm system is to be installed for the pressures and temperatures specified above, with the exception of the charge air pressure, the control air pressure and the exhaust gas temperature.

2.7.4 Main engines control from the wheelhouse

The vessel's control stand is to be fitted with indicators, easily visible to the operator, showing the starting and manoeuvring air pressure as well as the direction of rotation and revolutions of the propeller shaft.

In addition, the alarm system required under last paragraph of [2.7.3] is to signal faults on the bridge. Faults may be signalled in accordance with Ch 1, Sec 1, [3.8]. An indicator in the engine room and on the bridge shall show that the alarm system is operative.

2.7.5 auxiliary engines

Instruments or equivalent devices mounted in a logical manner on the engine shall indicate at least:

- engine speed
- lubricating oil pressure
- cooling water pressure
- cooling water temperature.

In addition, engines of over 50 kW power are to be equipped with an engine alarm system responding to the lubricating oil pressure and to the pressure or flow rate of the cooling water or a failure of the cooling fan, as applicable.

3 Arrangement and installation

3.1 Starting arrangements

3.1.1 Mechanical air starting

a) Air starting the main and auxiliary engines is to be arranged in compliance with Ch 1, Sec 10, [17.3.1].

b) The total capacity of air compressors and air receivers is to be in compliance with Ch 1, Sec 10, [17.3.2] and Ch 1, Sec 10, [17.3.3].

c) The main starting air arrangements for main propulsion or auxiliary diesel engines are to be adequately protected against the effects of backfiring and internal explosion in the starting air pipes. To this end, the following safety devices are to be fitted:

- An isolating non-return valve, or equivalent, at the starting air supply connection to each engine
- A bursting disc or flame arrester:
  - in way of the starting valve of each cylinder, for direct reversing engines having a main starting air manifold
  - at least at the supply inlet to the starting air manifold, for non-reversing engines.

The bursting disc or flame arrester above may be omitted for engines having a bore not exceeding 230 mm.

Other protective devices will be specially considered by the Society.

The requirements of this item c) do not apply to engines started by pneumatic motors.

d) Compressed air receivers are to comply with the requirements of Ch 1, Sec 3. Compressed air piping and associated air compressors are to comply with the requirements of Ch 1, Sec 10.

3.1.2 Electrical starting

a) Where main internal combustion engines are arranged for electrical starting, at least two separate batteries are to be fitted.

The arrangement is to be such that the batteries cannot be connected in parallel.

Each battery is to be capable of starting the main engine when in cold and ready to start condition.

The combined capacity of batteries is to be sufficient to provide within 30 min, without recharging, the number of starts required in [3.1.1] b) in the event of air starting.

b) Electrical starting arrangements for auxiliary engines are to have two separate storage batteries or may be supplied by two separate circuits from main engine storage batteries when these are provided. In the case of a single auxiliary engine, one battery is acceptable. The combined capacity of the batteries is to be sufficient for at least three starts for each engine.

c) The starting batteries are only to be used for starting and for the engine's alarm and monitoring. Provision is to be made to maintain the stored energy at all times.

d) For rating of each charging device, see Ch 2, Sec 7, [7].

3.2 Turning gear

3.2.1 Each engine is to be provided with hand-operated turning gear; where deemed necessary, the turning gear is to be both hand and mechanically-operated.

The turning gear engagement is to inhibit starting operations.

3.3 Trays

3.3.1 Trays fitted with means of drainage are to be provided in way of the lower part of the crankcase and, in general, in way of the parts of the engine, where oil is likely to spill in order to collect the fuel oil or lubricating oil dripping from the engine.

3.4 Exhaust gas system

3.4.1 In addition to the requirements given in Ch 1, Sec 10, [18], the exhaust system is to be efficiently cooled or insulated in such a way that the surface temperature does not exceed 220°C (see also Ch 1, Sec 1, [3.7]).

4 Type tests, material tests, workshop inspection and testing, certification

4.1 General

4.1.1 Type testing, material and non-destructive tests for engine components, factory acceptance test and certification for diesel engines are to be in compliance with NR467, Pt C, Ch 1, Sec 2, [4].

SECTION 3 PRESSURE EQUIPMENT

1 General

1.1 Principles

1.1.1 Scope of the Rules

The boilers and other pressure vessels, associated piping systems and fittings are to be of a design and construction adequate for the service for which they are intended and are to be so installed and protected as to reduce to a minimum any danger to persons on board, due regard being paid to moving parts, hot surfaces and other hazards. The design is to have regard to materials used in construction, the purpose for which the equipment is intended, the working conditions to which it will be subjected and the environmental conditions on board.

So these Rules apply to pressure equipment (see Note 1) for the following requirements:

- be safe in sight of pressure risk
- be safe in sight of other risks, moving parts, hot surfaces
- ensure capability of essential services.

Note 1: Pressure equipment means pressure vessels, piping (see Ch 1, Sec 10), safety accessories and pressure accessories.

1.1.2 Overpressure risk

Where boilers and other pressure vessels or any parts thereof may be subject to dangerous overpressure, means are to be provided where practicable to protect against such excessive pressure.

1.1.3 Tests

All boilers and other pressure vessels including their associated fittings which are under internal pressure are to be subjected to appropriate tests including a pressure test before being put into service for the first time (see also [7]).

1.2 Application

1.2.1 Pressure vessels covered by the Rules

The requirements of this Section apply to:

- all fired or unfired pressures vessels of metallic construction, including the associated fittings and mountings with maximum allowable pressure greater than 0,5 bar above atmospheric pressure with the exception of those indicated in [1.2.2]
- all boilers and other steam generators, including the associated fittings and mountings with maximum allowable pressure greater than 0,5 bar above atmospheric pressure with the exception of those indicated in [1.2.2].

1.2.2 Pressure vessels not covered by the Rules

Among others the following boilers and pressure vessels are not covered by the Rules and are to be considered on a case by case basis:

a) boilers with design pressure $p > 10$ MPa

b) pressure vessel intended for radioactive material

c) equipment comprising casings or machinery where the dimensioning, choice of material and manufacturing rules are based primarily on requirements for sufficient strength, rigidity and stability to meet the static and dynamic operational effects or other operational characteristics and for which pressure is not a significant design factor. Such equipment may include:
   - engines including turbines and internal combustion engines
   - steam engines, gas/steam turbines, turbo-generators, compressors, pumps and actuating devices

d) small pressure vessels included in self-contained domestic equipment.

1.3 Definitions

1.3.1 Pressure vessel

Pressure vessel means a housing designed and built to contain fluids under pressure including its direct attachments up to the coupling point connecting it to other equipment. A vessel may be composed of more than one chamber.

1.3.2 Fired pressure vessel

Fired pressure vessel is a pressure vessel which is completely or partially exposed to fire from burners or combustion gases or otherwise heated pressure vessel with a risk of overheating.

a) Boiler

   Boiler is one or more fired pressure vessels and associated piping systems used for generating steam or hot water at a temperature above 120°C.

   Any equipment directly connected to the boiler, such as economisers, superheaters and safety valves, is considered as part of the boiler, if it is not separated from the steam generator by means of any isolating valve. Piping connected to the boiler is considered as part of the boiler upstream of the isolating valve and as part of the associated piping system downstream of the isolating valve.

b) Thermal oil heater

   Thermal oil heater is one or more fired pressure vessels and associated piping systems in which organic liquids (thermal oils) are heated. When heated by electricity thermal oil heater is considered as an unfired pressure vessel.

1.3.3 Unfired pressure vessel

Any pressure vessel which is not a fired pressure vessel is an unfired pressure vessel.

a) Heat exchanger

A heat exchanger is an unfired pressure vessel used to heat or cool a fluid with an another fluid. In general heat exchangers are composed of a number of adjacent chambers, the two fluids flowing separately in adjacent chambers. One or more chambers may consist of bundles of tubes.

b) Steam generator

A steam generator is a heat exchanger and associated piping used for generating steam. In general in these Rules, the requirements for boilers are also applicable for steam generators, unless otherwise indicated.

1.3.4 Safety accessories

Safety accessories means devices designed to protect pressure equipment against the allowable limits being exceeded. Such devices include:

- devices for direct pressure limitation, such as safety valves, bursting disc safety devices, buckling rods, controlled safety pressure relief systems, and
- limiting devices, which either activate the means for correction or provide for shutdown or shutdown and lockout, such as pressure switches or temperature switches or fluid level switches and safety related measurement control and regulation devices.

1.3.5 Design pressure

The design pressure is the pressure used by the manufacturer to determine the scantlings of the vessel. This pressure cannot be taken less than the maximum working pressure and is to be limited by the set pressure of the safety valve, as prescribed by the applicable Rules. Pressure is indicated as gauge pressure above atmospheric pressure, vacuum is indicated as negative pressure.

1.3.6 Design temperature

a) Design temperature is the actual metal temperature of the applicable part under the expected operating conditions, as modified in Tab 1. This temperature is to be stated by the manufacturer and is to take in account of the effect of any temperature fluctuations which may occur during the service.

b) The design temperature is not to be less than the temperatures stated in Tab 1, unless specially agreed between the manufacturer and the Society on a case by case basis.

1.3.7 Volume

Volume V means the internal volume of a chamber, including the volume of nozzles to the first connection or weld and excluding the volume of permanent internal parts.

1.3.8 Boiler heating surface

Boiler heating surface is the area of the part of the boiler through which the heat is supplied to the medium, on the side exposed to fire or hot gases.

1.3.9 Maximum steam output

Maximum steam output is the maximum quantity of steam than can be produced continuously by the boiler or steam generator operating under the design steam conditions.

1.3.10 Toxic and corrosive substances

Toxic and corrosive substances are those which are listed in the ADN "European Agreement concerning the International Carriage of Dangerous Goods by Inland Waterways)", as amended.

1.3.11 Liquid and gaseous substances

a) Liquid substances are liquids having a vapour pressure at the maximum allowable temperature of not more than 0,5 bar above normal atmospheric pressure.

b) Gaseous substances are gases, liquefied gases, gases dissolved under pressure, vapours and also those liquids whose vapour pressure at the maximum allowable temperature is greater than 0,5 bar above normal atmospheric pressure.

1.3.12 Ductile material

For the purpose of this Section, ductile material is a material having an elongation over 12%.

Table 1 : Minimum design temperature

Type of vessel	Minimum design temperature
Pressure parts of pressure vessels and boilers not heated by hot gases or adequately protected by insulation	Maximum temperature of the internal fluid
Pressure vessel heated by hot gases	25°C in excess of the temperature of the internal fluid
Water tubes of boilers mainly subjected to convection heat	25°C in excess of the temperature of the saturated steam
Water tubes of boilers mainly subjected to radiant heat	50°C in excess of the temperature of the saturated steam
Superheater tubes of boilers mainly subjected to convection heat	35°C in excess of the temperature of the saturated steam
Superheater tubes of boilers mainly subjected to radiant heat	50°C in excess of the temperature of the saturated steam
Economiser tubes	35°C in excess of the temperature of the internal fluid
For combustion chambers of the type used in wet-back boilers	50°C in excess of the temperature of the internal fluid
For furnaces, fire-boxes, rear tube plates of dry-back boilers and other pressure parts subjected to similar rate of heat transfer	90°C in excess of the temperature of the internal fluid

1.4 Classes

1.4.1 Significant parameters

Pressure vessels are classed in three class in consideration of the:

- type of equipment: pressure vessel or steam generator
- state (gaseous or liquid) of the intended fluid contents
- substances listed or not in ADN
- design pressure p, in MPa
- design temperature T, in °C
- actual thickness of the vessel tA, in mm
- volume V, in litres.

1.4.2 Pressure vessel classification

Pressure vessels are classed as indicated in Tab 2.

1.4.3 Implication of class

The class of a pressure vessel has, among others, implication in:

- design
- material allowance
- welding design
- efficiency of joints
- examination and non-destructive tests
- thermal stress relieving.

See Tab 10.

1.5 Applicable Rules

1.5.1 General

Boilers and pressure vessels are to be designed, constructed, installed and tested in accordance with the applicable requirements of this Section.

1.5.2 Alternative standards

Other national and international standards such as AD-Merkbläter, ASME, CODAP, British Standards or harmonized European Standards may be considered as an alternative to the requirements of this Section.

1.5.3 Statutory regulations

As regards their construction and installation, pressure equipment is also required to comply with applicable statutory regulations of the flag state Authority.

1.5.4 Provisions applicable to oil firing equipment

For rule requirements applicable to oil firing equipment, see Ch 1, Sec 4.

1.6 Documentation to be submitted

1.6.1 General

Documents mentioned in the present sub-article are to be submitted for class 1 and class 2 and not for class 3, unless the equipment is considered as critical.

1.6.2 Boilers and steam generators

The plans listed in Tab 3 are to be submitted.

The drawings listed in Tab 3 are to contain the:

- constructional details of all pressure parts, such as shells, headers, tubes, tube plates, nozzles
- strengthening members, such as stays, brackets, opening reinforcements and covers
- installation arrangements, such as saddles and anchoring system,

as well as the information and data indicated in Tab 4.

1.6.3 Pressure vessels

The plans listed in Tab 5 are to be submitted.

The drawings listed in Tab 5 are to contain the constructional details of:

- pressure parts, such as shells, headers, tubes, tube plates, nozzles, opening reinforcements and covers
- strengthening members, such as stays, brackets and reinforcements.

Table 2 : Pressure vessel classification

Equipment	Class 1	Class 2	Class 3
Steam generators or boilers	p > 3,2 and V > 2 or p V > 20 and V > 2	if not class 1 or class 3	p V ≤ 5 or V ≤ 2
Pressure vessels for toxic substances	all	–	–
Pressure vessels for corrosive substances	p > 20 or p V > 20 or T > 350	if not in class 1	–
Pressure vessels for gaseous substances	p > 100 or p V > 300	V > 1 and p V > 100 and not in class 1	all pressure vessels which are not class 1 or class 2
Pressure vessels for liquid substances	V > 10 and p V > 1000 and p > 50	V ≤ 10 and p > 100 or 1 < p ≤ 50 and p V > 1000	all pressure vessels and heat exchangers which are not class 1 or class 2
Pressure vessels for thermal oil	p > 1,6 or T > 300	if not class 1 or class 3	p ≤ 0,7 and T ≤ 150
Pressure vessels for fuel oil, lubricating oil or flammable hydraulic oil	p > 1,6 or T > 150	if not class 1 or class 3	p ≤ 0,7 and T ≤ 60
Whatever type of equipment	t_A > 40	15 < t_A ≤ 40	–
Note 1: Whenever the class is defined by more than one characteristic, the equipment is to be considered belonging to the highest class of its characteristics, independently of the values of the other characteristics.			

Table 3 : Drawings to be submitted for boilers and steam generators

No	A/I	Item
1	I	General arrangement plan, including valves and fittings
2	A	Material specifications
3	A	Sectional assembly
4	A	Evaporating parts
5	A	Superheater
6	A	De-superheater
7	A	Economiser
8	A	Air heater
9	A	Tubes and tube plates
10	A	Nozzles and fittings
11	A	Safety valves and their arrangement
12	A	Boiler seating
13	I	Fuel oil burning arrangement
14	I	Forced draught system
15	I	Refractor or insulation arrangement
16	A	Boiler instrumentation, monitoring and control system
17	A	Type of safety valves and their lift, discharge rate and setting
18	A	Welding details, including at least: • typical weld joint design • welding procedure specifications • post-weld heat treatment
Note 1: A = to be submitted for review I = to be submitted for information.		

Table 4 : Information and data to be submitted for boilers and steam generators

No	Item
1	Design pressure and temperature
2	Pressure and temperature of the superheated steam
3	Pressure and temperature of the saturated steam
4	Maximum steam production per hour
5	Evaporating surface of the tube bundles and water-walls
6	Heating surface of the economiser, superheater and air-heater
7	Surface of the furnace
8	Volume of the combustion chamber
9	Temperature and pressure of the feed water
10	Type of fuel to be used and fuel consumption at full steam production
11	Number and capacity of burners

Table 5 : Drawings, information and data to be submitted for pressure vessels and heat exchangers

No	A/I	Item
1	I	General arrangement plan, including nozzles and fittings
2	A	Sectional assembly
3	A	Safety valves (if any) and their arrangement
4	A	Material specifications
5	A	Welding details, including at least: • typical weld joint design • welding procedure specifications • post-weld heat treatments
6	I	Design data, including at least design pressure and design temperatures (as applicable)
7	A	For seamless (extruded) pressure vessels, the manufacturing process, including: • a description of the manufacturing process with indication of the production controls normally carried out in the manufacturer's works • details of the materials to be used (specification, yield point, tensile strength, impact strength, heat treatment) • details of the stamped marking to be applied
8	I	Type of fluid or fluids contained
Note 1: A = to be submitted for review I = to be submitted for information.		

2 Design and construction - Scantlings of pressure parts

2.1 General

2.1.1 Application

a) In general, the formulae in the present Article do not take into account additional stresses imposed by effects other than pressure, such as stresses deriving from the static and dynamic weight of the pressure vessel and its content, external loads from connecting equipment and foundations, etc. For the purpose of the Rules, these additional loads may be neglected, provided it can reasonably be presumed that the actual average stresses of the vessel, considering all these additional loads, would not increase more than 10% with respect to the stresses calculated by the formulae in this Article.

b) Where it is necessary to take into account additional stresses, such as dynamic loads, the Society reserves the right to ask for additional requirements on a case by case basis.

2.1.2 Alternative requirements

When pressure parts are of an irregular shape, such as to make it impossible to check the scantlings by applying the formulae of this Article, the review is to be based on other means, such as burst and/or deformation tests on a prototype or by another method agreed upon between the manufacturer and the Society.

2.2 Materials

2.2.1 Materials for high temperatures

a) Materials for pressure parts having a design temperature exceeding the ambient temperature are to be selected by the Manufacturer and to have mechanical and metallurgical properties adequate for the design temperature. Their allowable stress limits are to be determined as a function of the temperature, as per [2.3.2].

b) When the design temperature of pressure parts exceeds 400°C, alloy steels are to be used. Other materials are subject of special consideration by the Society.

2.2.2 Materials for low temperatures

Materials for pressure parts having a design temperature below the ambient temperature are to have notch toughness properties suitable for the design temperature.

2.2.3 Cast iron

Grey cast iron is not to be used for:

a) class 1 and class 2 pressure vessels

b) class 3 pressure vessels with design pressure $p > 1,6$ MPa or product $p \cdot V > 1000$, where V is the internal volume of the pressure vessel in litres

c) Bolted covers and closures of pressure vessels having a design pressure $p > 1$ MPa, except for covers intended for boiler shells, for which [3.2.4] applies.

Spheroidal cast iron may be used subject to the agreement of the Society following special consideration. However, it is not to be used for parts, having a design temperature exceeding 350°C.

2.2.4 Valves and fittings for boilers

a) Ductile materials are to be used for valves and fittings intended to be mounted on boilers. The material is to have mechanical and metallurgical characteristics suitable for the design temperature and for the thermal and other loads imposed during the operation.

b) Grey cast iron is not to be used for valves and fittings which are subject to dynamic loads, such as safety valves and blow-down valves, and in general for fittings and accessories having design pressure p exceeding 0,3 MPa and design temperature T exceeding 220°C.

c) Spheroidal cast iron is not to be used for parts having a design temperature T exceeding 350°C.

d) Bronze is not to be used for parts having design temperature T exceeding 220°C for normal bronzes and 260°C for bronzes suitable for high temperatures. Copper and aluminium brass are not to be used for fittings with design temperature T above 200°C and copper-nickel fittings with design temperature T exceeding 300°C.

2.2.5 Alternative materials

In the case of boilers or pressure vessels constructed in accordance with one of the standards considered acceptable by the Society as per [1.5], the material specifications are to be in compliance with the requirements of the standard used.

2.3 Permissible stresses

2.3.1 The permissible stresses K, in N/mm^2, for steels, to be used in the formulae of this Article, may be determined from Tab 6, Tab 7, Tab 8 and Tab 9 where R_m is the ultimate strength of the material, in N/mm^2. For intermediate values of the temperature, the value of K is to be obtained by linear interpolation.

Table 6 : Permissible stresses K for carbon steels intended for boilers and thermal oil heaters

Carbon steel	Carbon steel thickness	Permissible stresses K for temperature T (°C):							
		≤ 50	100	150	200	250	300	350	400
R_m = 360 N/mm^2 Grade HA	t ≤ 15 mm	133	109	107	105	94	77	73	72
	15 mm < t ≤ 40 mm	128	106	105	101	90	77	73	72
	40 mm < t ≤ 60 mm	122	101	99	95	88	77	73	72
R_m = 360 N/mm^2 Grades HB, HD	t ≤ 15 mm	133	127	116	103	79	79	72	69
	15 mm < t ≤ 40 mm	133	122	114	102	79	79	72	69
	40 mm < t ≤ 60 mm	133	112	107	99	79	79	72	69
R_m = 410 N/mm^2 Grade HA	t ≤ 15 mm	152	132	130	126	112	94	89	86
	15 mm < t ≤ 40 mm	147	131	124	119	107	94	89	86
	40 mm < t ≤ 60 mm	141	120	117	113	105	94	89	86
R_m = 410 N/mm^2 Grades HB, HD	t ≤ 15 mm	152	147	135	121	107	95	88	84
	15 mm < t ≤ 40 mm	152	142	133	120	107	95	88	84
	40 mm < t ≤ 60 mm	152	134	127	117	107	95	88	84
R_m = 460 N/mm^2 Grades HB, HD	t ≤ 15 mm	170	164	154	139	124	111	104	99
	15 mm < t ≤ 40 mm	169	162	151	137	124	111	104	99
	40 mm < t ≤ 60 mm	162	157	147	136	124	111	104	99
R_m = 510 N/mm^2 Grades HB, HD	t ≤ 60 mm	170	170	169	159	147	134	125	112

Table 7 : Permissible stresses K for carbon steels intended for other pressure vessels

Carbon steel	Carbon steel thickness	Permissible stresses K for temperature T (°C):							
		≤ 50	100	150	200	250	300	350	400
R_m = 360 N/mm² Grade HA	t ≤ 15 mm	133	117	115	112	100	83	78	77
	15 mm < t ≤ 40 mm	133	114	113	108	96	83	78	77
	40 mm < t ≤ 60 mm	130	108	105	101	94	83	78	77
R_m = 360 N/mm² Grades HB, HD	t ≤ 15 mm	133	133	123	110	97	85	77	73
	15 mm < t ≤ 40 mm	133	131	122	109	97	85	77	73
	40 mm < t ≤ 60 mm	133	119	115	106	97	85	77	73
R_m = 410 N/mm² Grade HA	t ≤ 15 mm	152	141	139	134	120	100	95	92
	15 mm < t ≤40 mm	152	134	132	127	114	100	95	92
	40 mm < t ≤ 60 mm	150	128	121	112	112	100	95	92
R_m = 410 N/mm² Grades HB, HD	t ≤ 15 mm	152	152	144	129	114	101	94	89
	15 mm < t ≤ 40 mm	152	152	142	128	114	101	94	89
	40 mm < t ≤ 60 mm	152	143	139	125	114	101	94	89
R_m = 460 N/mm² Grades HB, HD	t ≤ 15 mm	170	170	165	149	132	118	111	105
	15 mm < t ≤ 40 mm	170	170	161	147	132	118	111	105
	40 mm < t ≤ 60 mm	170	167	157	145	132	118	111	105
R_m = 510 N/mm² Grades HB, HD	t ≤ 60 mm	189	189	180	170	157	143	133	120

Table 8 : Permissible stresses K for alloy steels intended for boilers and thermal oil heaters

Alloy steel	Alloy steel thickness	Permissible stresses K for temperature T (°C):														
		≤ 50	100	150	200	250	300	350	400	450	475	500	525	550	575	600
0,3Mo	t ≤ 60 mm	159	153	143	134	125	106	100	94	91	89	87	36			
1Cr 0,5Mo	t ≤ 60 mm	167	167	157	144	137	128	119	112	106	104	103	55	31	19	
2,25Cr 1Mo **(1)**	t ≤ 60 mm	170	167	157	147	144	137	131	125	119	115	112	61	41	30	22
2,25Cr 1Mo **(2)**	t ≤ 60 mm	170	167	164	161	159	147	141	130	128	125	122	61	41	30	22

(1) Normalised and tempered
(2) Normalised and tempered or quenched and tempered.

Table 9 : Permissible stresses K for alloy steels intended for other pressure vessels

Alloy steel	Alloy steel thickness	Permissible stresses K for temperature T (°C):														
		≤ 50	100	150	200	250	300	350	400	450	475	500	525	550	575	600
0,3Mo	t ≤ 60 mm	159	159	153	143	133	113	107	100	97	95	93	38			
1Cr 0,5Mo	t ≤ 60 mm	167	167	167	154	146	137	127	119	113	111	110	59	33	20	
2,25Cr 1Mo **(1)**	t ≤ 60 mm	183	174	167	157	154	146	140	133	127	123	119	65	44	32	23
2,25Cr 1Mo **(2)**	t ≤ 60 mm	174	174	174	172	170	157	150	139	137	133	130	65	44	32	23

(1) Normalised and tempered
(2) Normalised and tempered or quenched and tempered.

2.3.2 Direct determination of permissible stress

The permissible stresses K, where not otherwise specified, may be taken as indicated below:

a) Steel:

$$K = \min\left(\frac{R_{m,20}}{2,7}, \frac{R_{S,MIN,T}}{A}, \frac{S_A}{A}\right)$$

b) Spheroidal cast iron:

$$K = \min\left(\frac{R_{m,20}}{4,8}, \frac{R_{S,MIN,T}}{3}\right)$$

c) Grey cast iron:

$$K = \frac{R_{m,20}}{10}$$

d) Copper alloys:

$$K = \frac{R_{m,T}}{4}$$

e) Aluminium and aluminium alloys:

$$K = \min\left(\frac{R_{m,T}}{4}, \frac{R_{e,H}}{1,5}\right)$$

where:

$R_{m, 20}$: Minimum tensile strength at ambient temperature (20°C), in N/mm^2

$R_{S, MIN, T}$: Minimum between R_{eH} and $R_{p0,2}$ at the design temperature T, in N/mm^2

S_A : Average stress to produce creep rupture in 100000 hours, in N/mm^2, at the design temperature T

A : Safety factor taken as follows, when reliability of $R_{S, MIN, T}$ and S_A values are proved to the Society's satisfaction:

- 1,6 for boilers and other steam generators
- 1,5 for other pressure vessels
- specially considered by the Society if average stress to produce creep rupture in more than 100000 hours is used instead of S_A.

In the case of steel castings, the permissible stress K, calculated as above, is to be decreased by 20%. Where steel castings are subjected to non-destructive tests, a smaller reduction up to 10% may be taken into consideration by the Society

$R_{m, T}$: Minimum tensile strength at the design temperature T, in N/mm^2

R_{eH} : Minimum yield stress, in N/mm^2.

2.3.3 Additional conditions

- In special cases, the Society reserves the right to apply values of K lower than those specified in [2.3.2], in particular for lifting appliance devices and steering gear devices.
- In the case of boilers or other steam generators, K is not to exceed 170 N/mm^2.
- For materials other than those listed in [2.3.2], the permissible stress K is to be agreed with the Society on a case by case basis.

2.4 Scantling of pressure vessels

2.4.1 The scantling of pressure parts of pressure vessels is to be performed in compliance with NR467, Pt C, Ch 1, Sec 3, [2].

3 Design and construction - Equipment

3.1 All pressure vessels

3.1.1 Drainage

a) Each air pressure vessel is to be fitted with a drainage device allowing the evacuation of any oil or water accumulated in the vessel.

b) Drainage devices are also to be fitted on other vessels, in particular steam vessels, in which condensation water is likely to accumulate.

3.2 Boilers and steam generators

3.2.1 Safety valve arrangement

a) Every steam boiler and every steam generator with a total heating surface of 50 m^2 and above is to be provided with not less than two spring loaded safety valves of adequate capacity. For steam boilers and steam generators having heating surface less than 50 m2, only one safety valve need be fitted.

b) Where a superheater is an integral part of the boiler, at least one safety valve is to be located on the steam drum and at least one at the superheater outlet. The valves fitted at the superheater outlet may be considered as part of the boiler safety valves required in item a), provided that their capacity does not account for more than 25% of the total capacity required in [3.2.2], unless specially considered by the Society.

c) Where fitted, superheaters which may be shut-off from the boiler are to be provided with at least one safety valve; such valve(s) cannot be considered as part of the boiler safety valves required in item a).

d) In the case of boilers fitted with a separate steam accumulator, safety valves may be fitted on the accumulator if no shut-off is provided between it and the boiler and if the connecting pipe is of a size sufficient to allow the whole steam production to pass through, without increasing the boiler pressure more than 10% above the design pressure.

3.2.2 Relieving capacity of safety valves

a) The relieving capacity of each safety valve is to be determined in compliance with NR467 Pt C, Ch 1, Sec 3, [3.2.2].

b) When the safety valves are fitted at the superheater outlet. Their relieving capacity is to be such that, during the discharge of safety valves, a sufficient quantity of steam is circulated through the superheater to avoid damage.

c) The orifice diameter in way of the safety valves seat is not to be less than 40 mm. Where only one safety valve need be fitted, the orifice minimum diameter is not to be less than 50 mm. Valves of large relieving capacity with 15 mm minimum diameter may be accepted for boilers with steam production not exceeding 2000 kg/h.

d) Independently of the above requirements, the aggregate capacity of the safety valves is to be such as to discharge all the steam that can be generated without causing a transient pressure rise of more than 10% over the design pressure.

3.2.3 Miscellaneous safety valve requirements

a) Safety valves operated by pilot valves

The arrangement on the superheater of large relieving capacity safety valves, operated by pilot valves fitted in the saturated steam drum, is to be specially considered by the Society.

b) Safety valve setting

- safety valves are to be set under steam in the presence of the Surveyor to a pressure not higher than 1,03 times the design pressure
- safety valves are to be so constructed that their setting may not be increased in service and their spring may not be expelled in the event of failure. In addition, safety valves are to be provided with simple means of lifting the plug from its seat from a safe position in the boiler or engine room
- where safety valves are provided with means for regulating their relieving capacity, they are to be so fitted that their setting cannot be modified when the valves are removed for surveys.

c) Safety valve fitting on boiler

- the safety valves of a boiler are to be directly connected to the boiler and separated from other valve bodies
- where it is not possible to fit the safety valves directly on the superheater headers, they are to be mounted on a strong nozzle fitted as close as practicable to the superheater outlet. The cross-sectional area for passage of steam through restricted orifices of the nozzles is not to be less than 1/2 the aggregate area of the valves, calculated according to [3.2.2] a)
- safety valve bodies are to be fitted with drain pipes of a diameter not less than 20 mm for double valves, and not less than 12 mm for single valves, leading to the bilge or to the hot well. Valves or cocks are not to be fitted on drain pipes.

d) Exhaust pipes

- the minimum cross-sectional area of the exhaust pipes of safety valves which have not been experimentally tested is not to be less than C times the aggregate area A (see [3.2.2], a) for definition of C and A)
- the cross-sectional area of the exhaust manifold of safety valves is to be not less than the sum of the areas of the individual exhaust pipes connected to it
- silencers fitted on exhaust manifolds are to have a free passage area not less than that of the manifolds
- the strength of exhaust manifolds and pipes and associated silencers is to be such that they can withstand the maximum pressure to which they may be subjected, which is to be assumed not less than 1/4 of the safety valve setting pressure
- in the case that the discharges from two or more valves are led to the same exhaust manifold, provision is to be made to avoid the back pressure from the valve which is discharging influencing the other valves
- exhaust manifolds are to be led to the open and are to be adequately supported and fitted with suitable expansion joints or other means so that their weight does not place an unacceptable load on the safety valve bodies.

e) Steam generator heated by steam

Steam heated steam generators are also to be protected against possible damage resulting from failure of the heating coils. In this case, the area of safety valves calculated as stated in [3.2.2] may need to be increased to the satisfaction of the Society, unless suitable devices limiting the flow of steam in the heating coils are provided.

3.2.4 Other requirements

Access arrangement

a) Boilers are to be provided with openings in sufficient number and size to permit internal examination, cleaning and maintenance operations. In general, all pressure vessels which are part of a boiler with inside diameter exceeding 1200 mm, and those with inside diameter exceeding 800 mm and length exceeding 2000 mm, are to be provided with access manholes.

b) Manholes are to be provided in suitable locations in the shells, headers, domes, and steam and water drums, as applicable. The “net” (actual hole) dimension of elliptical or similar manholes is to be not less than 300 mm x 400 mm. The “net” diameter of circular manholes (actual hole) cannot be less than 400 mm. The edges of manholes are to be adequately strengthened to provide compensation for vessel openings.

c) In pressure vessels which are part of a boiler and are not covered by the requirement in item a) above, or where an access manhole cannot be fitted, at least the following openings are to be provided, as far as practicable:

- head holes, minimum dimensions:
  220 mm x 320 mm (320 mm diameter if circular)
- handholes, minimum dimensions: 87 mm x 103 mm
- sight holes, minimum diameter: 50 mm.

d) Sight holes may only be provided when the arrangement of manholes, head holes, or handholes is impracticable.

e) Covers for manholes and other openings are to be made of ductile steel, dished or welded steel plates or other approved design. Grey cast iron may be used only for small openings, such as handholes and sight holes, provided the design pressure p does not exceed 1 MPa and the design temperature T does not exceed 220°C.

f) Covers are to be of self-closing internal type. Small opening covers of other type may be accepted by the Society on a case by case basis.

g) Covers of the internal type are to have a spigot passing through the opening. The clearance between the spigot and the edge of the opening is to be uniform for the whole periphery of the opening and is not to exceed 1,5 mm.

h) Closing devices of internal type covers, having dimensions not exceeding 180 mm x 230 mm, may be fitted with a single fastening bolt or stud. Larger closing devices are to be fitted with at least two bolts or studs.

i) Covers are to be designed so as to prevent the dislocation of the required gasket by the internal pressure. Only continuous ring gaskets may be used for packing.

Fittings

a) In general, cocks and valves are to be designed in accordance with the requirements in Ch 1, Sec 10.

b) Cocks, valves and other fittings are to be connected directly or as close as possible to the boiler shell.

c) Cocks and valves for boilers are to be arranged in such a way that it can be easily seen when they are open or closed and so that their closing is obtained by a clockwise rotation of the actuating mechanism.

Boiler burners

Burners are to be arranged so that they cannot be withdrawn unless the fuel supply to the burners is cut off.

Allowable water levels

a) In general, for water tube boilers the lowest permissible water level is just above the top row of tubes when the water is cold. Where the boiler is designed not to have fully submerged tubes, when the water is cold, the lowest allowable level indicated by the manufacturer is to be indicated on the drawings and submitted to the Society for consideration.

b) For fire tube boilers with combustion chamber integral with the boiler, the minimum allowable level is to be at least 50 mm above the highest part of the combustion chamber.

c) For vertical fire tube boilers the minimum allowable level is 1/2 of the length of the tubes above the lower tube sheet.

Steam outlets

a) Each boiler steam outlet, if not serving safety valves, integral superheaters and other appliances which are to have permanent steam supply during boiler operation, is to be fitted with an isolating valve secured either directly to the boiler shell or to a standpipe of substantial thickness, as short as possible, and secured directly to the boiler shell.

b) The number of auxiliary steam outlets is to be reduced to a minimum for each boiler.

c) Where several boilers supply steam to common mains, the arrangement of valves is to be such that it is possible to positively isolate each boiler for inspection and maintenance. In addition, for water tube boilers, non-return devices are to be fitted on the steam outlets of each boiler.

d) Where steam is used for essential auxiliaries (such as whistles, steam operated steering gears, steam operated electric generators, etc.) and when several boilers are fitted on board, it is to be possible to supply steam to these auxiliaries with any one of these boilers out of operation.

e) Each steam stop valve exceeding 150 mm nominal diameter is to be fitted with a bypass valve.

Feed check valves

a) Each fired boiler supplying steam to essential services is to be fitted with at least two feed check valves connected to two separate feed lines. For unfired steam generators a single feed check valve may be allowed.

b) Feed check valves are to be secured directly to the boiler or to an integral economiser. Water inlets are to be separated. Where, however, feed check valves are secured to an economiser, a single water inlet may be allowed provided that each feed line can be isolated without stopping the supply of feed water to the boiler.

c) Where the economisers may be bypassed and cut off from the boiler, they are to be fitted with pressure-limiting type valves, unless the arrangement is such that excessive pressure cannot occur in the economiser when cut off.

d) Feed check valves are to be fitted with control devices operable from the stokehold floor or from another appropriate location. In addition, for water tube boilers, at least one of the feed check valves is to be arranged so as to permit automatic control of the water level in the boiler.

e) Provision is to be made to prevent the feed water from getting in direct contact with the heated surfaces inside the boiler and to reduce, as far as possible and necessary, the thermal stresses in the walls.

Drains

Each superheater, whether or not integral with the boiler, is to be fitted with cocks or valves so arranged that it is possible to drain it completely.

Water sample

a) Every boiler is to be provided with means to supervise and control the quality of the feed water. Suitable arrangements are to be provided to preclude, as far as practicable, the entry of oil or other contaminants which may adversely affect the boiler.

b) For this purpose, boilers are to be fitted with at least one water sample cock or valve. This device is not to be connected to the water level standpipes.

c) Suitable inlets for water additives are to be provided in each boiler.

Marking of boilers

a) Each boiler is to be fitted with a permanently attached plate made of non-corrosive metal, with indication of the following information, in addition to the identification marks (name of manufacturer, year and serial number):

- the design pressure
- the design temperature
- the test pressure and the date of the test.

b) Markings may be directly stamped on the vessel if this does not produce notches having an adverse influence on its behaviour in service.

c) For lagged vessels, these markings are also to appear on a similar plate fitted above the lagging.

3.3 Thermal oil heaters and thermal oil installation

3.3.1 General

a) The following requirements apply to thermal oil heaters in which organic liquids (thermal oils) are heated by oil fired burners, exhaust gases or electricity to temperatures below their initial boiling point at atmospheric pressure.

b) Thermal oils are only to be used within the limits set by the manufacturer.

c) Means are to be provided for manual operation. However, at least the temperature control device on the oil side and flow monitoring are to remain operative even in manual operation.

d) Means are to be provided to take samples of thermal oil.

3.3.2 Thermal oil heater design

a) Heaters are to be so constructed that neither the surfaces nor the thermal oil becomes excessively heated at any point. The flow of the thermal oil is to be ensured by forced circulation.

b) The surfaces which come into contact with the thermal oil are to be designed for the design pressure, subject to the minimum pressure of 1 MPa.

c) Copper and copper alloys are not permitted.

d) Heaters heated by exhaust gas are to be provided with inspection openings at the exhaust gas intake and outlet.

e) Oil fired heaters are to be provided with inspection openings for examination of the combustion chamber. The opening for the burner may be considered as an inspection opening, provided its size is sufficient for this purpose.

f) Heaters are to be fitted with means enabling them to be completely drained.

g) Thermal oil heaters heated by exhaust gas are to be fitted with a permanent system for extinguishing and cooling in the event of fire, for instance a pressure water spraying system.

3.3.3 Safety valves of thermal oil heaters

Each heater is to be equipped with at least one safety valve having a discharge capacity at least equal to the increase in volume of the thermal oil at the maximum heating power. During discharge the pressure may not increase above 10% over the design pressure.

3.3.4 Pressure vessels of thermal oil heaters

The design pressure of all vessels which are part of a thermal oil system, including those open to the atmosphere, is to be taken not less than 0,2 MPa.

3.3.5 Equipment of the expansion, storage and drain tanks

For the equipment to be installed on expansion, storage and drain tanks, see Ch 1, Sec 10, [13].

3.3.6 Marking

Each thermal oil heater and other pressure vessels which are part of a thermal oil installation are to be fitted with a permanently attached plate made of non-corrosive metal, with indication of the following information, in addition to the identification marks (name of manufacturer, year and serial number):

- Heaters
  - maximum allowable heating power
  - design pressure
  - maximum allowable discharge temperature
  - minimum flow rate
  - liquid capacity
- Vessels
  - design pressure
  - design temperature
  - capacity.

3.4 Special types of pressure vessels

3.4.1 Seamless pressure vessels (bottles)

Each bottle is to be marked with the following information:

- name or trade name of the manufacturer
- serial number
- type of gas
- capacity
- test pressure
- empty weight
- test stamp.

3.4.2 Steam condensers

a) The water chambers and steam spaces are to be fitted with doors for inspection and cleaning.

b) Where necessary, suitable diaphragms are to be fitted for supporting tubes.

c) Condenser tubes are to be removable.

d) High speed steam flow, where present, is to be prevented from directly striking the tubes by means of suitable baffles.

e) Suitable precautions are to be taken in order to avoid corrosion on the circulating water side and to provide an efficient grounding.

3.5 Thermal oil heaters and thermal oil installation

3.5.1 General

a) The following requirements apply to thermal oil heaters in which organic liquids (thermal oils) are heated by oil fired burners, exhaust gases or electricity to temperatures below their initial boiling point at atmospheric pressure.

b) Thermal oils are only to be used within the limits set by the manufacturer.

c) Means are to be provided for manual operation. However, at least the temperature control device on the oil side and flow monitoring are to remain operative even in manual operation.

d) Means are to be provided to take samples of thermal oil.

3.5.2 Thermal oil heater design

a) Heaters are to be so constructed that neither the surfaces nor the thermal oil becomes excessively heated at any point. The flow of the thermal oil is to be ensured by forced circulation.

b) The surfaces which come into contact with the thermal oil are to be designed for the design pressure, subject to the minimum pressure of 1 MPa.

c) Copper and copper alloys are not permitted.

d) Heaters heated by exhaust gas are to be provided with inspection openings at the exhaust gas intake and outlet.

e) Oil fired heaters are to be provided with inspection openings for examination of the combustion chamber. The opening for the burner may be considered as an inspection opening, provided its size is sufficient for this purpose.

f) Heaters are to be fitted with means enabling them to be completely drained.

g) Thermal oil heaters heated by exhaust gas are to be fitted with a permanent system for extinguishing and cooling in the event of fire, for instance a pressure water spraying system.

3.5.3 Safety valves of thermal oil heaters

Each heater is to be equipped with at least one safety valve having a discharge capacity at least equal to the increase in volume of the thermal oil at the maximum heating power. During discharge the pressure may not increase above 10% over the design pressure.

3.5.4 Pressure vessels of thermal oil heaters

The design pressure of all vessels which are part of a thermal oil system, including those open to the atmosphere, is to be taken not less than 0,2 MPa.

3.5.5 Equipment of the expansion, storage and drain tanks

For the equipment to be installed on expansion, storage and drain tanks, see Ch 1, Sec 10, [13].

3.5.6 Marking

Each thermal oil heater and other pressure vessels which are part of a thermal oil installation are to be fitted with a permanently attached plate made of non-corrosive metal, with indication of the following information, in addition to the identification marks (name of manufacturer, year and serial number):

- Heaters
  - maximum allowable heating power
  - design pressure
  - maximum allowable discharge temperature
  - minimum flow rate
  - liquid capacity
- Vessels
  - design pressure
  - design temperature
  - capacity.

3.6 Other pressure vessels

3.6.1 Safety valves arrangement

a) General:

- pressure vessels which are part of a system are to be provided with safety valves, or equivalent devices, if they are liable to be isolated from the system safety devices. This provision is also to be made in all cases in which the vessel pressure can rise, for any reason, above the design pressure
- in particular, air pressure vessels which can be isolated from the safety valves ensuring their protection in normal service are to be fitted with another safety device, such as a rupture disc or a fusible plug, in order to ensure their discharge in case of fire. This device is to discharge to the open
- safety devices ensuring protection of pressure vessels in normal service are to be rated to operate before the pressure exceeds the maximum working pressure by more than 5%
- where two or more pressure vessels are interconnected by a piping system of adequate size so that no branch of piping may be shut off, it is sufficient to provide them with one safety valve and one pressure gauge only.

b) Heat exchangers

Special attention is to be paid to the protection against overpressure of vessels, such as heat exchangers, which have parts that are designed for a pressure which is below that to which they might be subjected in the case of rupture of the tubular bundles or coils contained therein and that have been designed for a higher pressure.

3.6.2 Other requirements

a) Access arrangement

The access requirements for boilers stated in [3.2.4] are also applicable for other pressure vessels.

b) Corrosion protection

Vessels and equipment containing media that might lead to accelerated corrosion are to be suitably protected.

c) Marking:

- each pressure vessel is to be fitted with a permanently attached plate made of non-corrosive metal, with indication of the following information, in addition to the identification marks (name of manufacturer, year and serial number):
  - the design pressure
  - the design temperature
  - the test pressure and the date of the test
- markings may be directly stamped on the vessel if this does not produce notches having an adverse influence on its behaviour in service
- for smaller pressure vessels the indication of the design pressure only may be sufficient.

4 Design and construction - Fabrication and welding

4.1 General principles

4.1.1 Base materials

a) These requirements apply to boilers and pressure vessels made of steel of weldable quality.

b) Fabrication and welding of vessels made of other materials are to be the subject of special consideration.

4.1.2 Welding

a) Weldings are to be performed in accordance with welding procedures approved by the Society.

b) Manual and semi-automatic welding is to be performed by welders qualified by the Society.

c) The conditions under which the welding procedures, welding equipment and welders operate are to correspond to those specified in the relevant approvals or qualifications.

d) Both ordinary and special electric arc welding processes are covered in the following requirements.

4.1.3 Cutting of plates

a) Plates are to be cut by flame cutting, mechanical machining or a combination of both processes. For plates having a thickness less than 25 mm, cold shearing is admitted provided that the sheared edge is removed by machining or grinding for a distance of at least one quarter of the plate thickness with a minimum of 3 mm.

b) For flame cutting of alloy steel plates, preheating is to be carried out if necessary.

c) The edges of cut plates are to be examined for laminations, cracks or any other defect detrimental to their use.

4.1.4 Forming of plates

a) The forming processes are to be such as not to impair the quality of the material. The Society reserves the right to require the execution of tests to demonstrate the suitability of the processes adopted. Forming by hammering is not allowed.

b) Unless otherwise justified, cold formed shells are to undergo an appropriate heat treatment if the ratio of internal diameter after forming to plate thickness is less than 20. This heat treatment may be carried out after welding.

c) Before or after welding, hot formed plates are to be normalised or subjected to another treatment suitable for their steel grade, if hot forming has not been carried out within an adequate temperature range.

d) Plates which have been previously butt-welded may be formed under the following conditions:

- Hot forming

  After forming, the welded joints are to be subjected to X-ray examination or equivalent. In addition, mechanical tests of a sample weld subjected to the same heat treatment are to be carried out.

- Cold forming

  Cold forming is only allowed for plates having a thickness not exceeding:

  - 20 mm for steels having minimum ultimate tensile strength R_m between 360 N/mm^2 and 410 N/mm^2
  - 15 mm for steels having R_m between 460 N/mm^2 and 510 N/mm^2 as well as for steels 0,3Mo, 1Mn0,5Mo, 1Mn0,5MoV and 0,5Cr0,5Mo.

  Cold forming is not allowed for steels 1Cr0,5Mo and 2,25Cr1Mo.

- Weld reinforcements are to be carefully ground smooth prior to forming.
- A proper heat treatment is to be carried out after forming, if the ratio of internal diameter to thickness is less than 36, for steels: 460 N/mm^2, 510 N/mm^2, 0,3Mo, 1Mn0,5Mo, 1Mn0,5MoV and 0,5Cr0,5Mo.
- After forming, the joints are to be subjected to X-ray examination or equivalent and to a magnetic particle or liquid penetrant test.

4.2 Fabrication and welding

4.2.1 The design and procedure for fabrication and welding are to comply with NR467, Pt C, Ch 1, Sec 3, [4].

5 Design and construction - Control and monitoring

5.1 Boiler control and monitoring system

5.1.1 Local control and monitoring

Means to effectively operate, control and monitor the operation of oil fired boilers and their associated auxiliaries are to be provided locally. The functional condition of the fuel, feed water and steam systems and the boiler operational status are to be indicated by pressure gauges, temperature indicators, flow-meter, lights or other similar devices.

5.1.2 Emergency shut-off

Means are to be provided to shut down boiler forced draft or induced draft fans and fuel oil service pumps from outside the space where they are located, in the event that a fire in that space makes their local shut-off impossible.

5.1.3 Water level indicators

a) Each boiler is to be fitted with at least two separate means for indicating the water level. One of these means is to be a level indicator with transparent element. The other may be either an additional level indicator with transparent element or an equivalent device. Level indicators are to be of an approved type.

b) The transparent element of level indicators is to be made of glass, mica or other appropriate material.

c) Level indicators are to be located so that the water level is readily visible at all times. The lower part of the transparent element is not to be below the safety water level defined by the builder.

d) Level indicators are to be fitted either with normally closed isolating cocks, operable from a position free from any danger in case of rupture of the transparent element or with self-closing valves restricting the steam release in case of rupture of this element.

5.1.4 Pressure control devices

a) Each boiler is to be fitted with a steam pressure gauge so arranged that its indications are easily visible from the stokehold floor. A steam pressure gauge is also to be provided for superheaters which can be shut off from the boiler they serve.

b) Pressure gauges are to be graduated in units of effective pressure and are to include a prominent legible mark for the pressure that is not to be exceeded in normal service.

c) Each pressure gauge is to be fitted with an isolating cock.

d) Double front boilers are to have a steam pressure gauge arranged in each front.

5.1.5 Temperature control devices

Each boiler fitted with a superheater is to have an indicator or recorder for the steam temperature at the superheater outlet.

5.1.6 Automatic shut-off of oil fired boilers

a) Each burner is to be fitted with a flame scanner designed to automatically shut off the fuel supply to the burner in the event of flame failure. In the case of failure of the flame scanner, the fuel to the burner is to be shut off automatically.

b) A low water condition is to automatically shut off the fuel supply to the burners. The shut-off is to operate before the water level reaches a level so low as to affect the safety of the boiler and no longer be visible in the gauge glass. Means are to be provided to minimise the risk of shut-off provoked by the effect of roll and pitch and/or transients. This shut-off system need not be installed in auxiliary boilers which are under local supervision and are not intended for automatic operation.

c) Forced draft failure is to automatically shut off the fuel supply to the burners.

d) Loss of boiler control power is to automatically shut off the fuel supply to the burners.

5.1.7 Alarms

Any actuation of the fuel-oil shut-off listed in [5.1.6] is to operate a visual and audible alarm.

5.2 Pressure vessel instrumentation

5.2.1

a) Pressure vessels are to be fitted with the necessary devices for checking pressure, temperature and level, where it is deemed necessary.

b) In particular, each air pressure vessel is to be fitted with a local manometer.

5.3 Thermal oil heater control and monitoring

5.3.1 Local control and monitoring

Suitable means to effectively operate, control and monitor the operation of oil fired thermal oil heaters and their associated auxiliaries are to be provided locally. The functional condition of the fuel, thermal oil circulation, forced draft and flue gas systems is to be indicated by pressure gauges, temperature indicators, flow-meter, lights or other similar devices.

5.3.2 Flow control and monitoring

a) A flow indicator of the thermal oil is to be provided.

b) The flow detection is to be representative of the flow in each heated element.

c) The flow detection is not to be based on a measurement of the pressure-drop through the heating element.

d) Oil fired or exhaust gas heaters are to be provided with a flow monitor limit-switch. If the flow rate falls below a minimum value the firing system is to be switched off and interlocked.

5.3.3 Manual control

At least the temperature control device on the oil side and flow monitoring are to remain operative in manual operation.

5.3.4 Leakage monitoring

Oil tanks are to be equipped with a leakage detector which, when actuated, shuts down and interlocks the thermal oil firing system. If the oil fired heater is on stand-by, the starting of the burner is to be blocked if the leakage detector is actuated.

5.4 Control and monitoring requirements

5.4.1 For control and monitoring requirements of steam boilers and oil fired thermal oil heaters, see Ch 3, Sec 2.

6 Arrangement and installation

6.1 Foundations

6.1.1 For boilers and pressure vessels bolting down to their foundations, see Ch 1, Sec 1, [3.3.1]. Where necessary, they are also to be secured to the adjacent hull structures by suitable ties.

Where chocks are required to be fitted between the boilers and their foundations, they are to be of cast iron or steel.

6.2 Boilers

6.2.1 Thermal expansion

Means are to be provided to compensate thermal expansion of boilers.

6.2.2 Minimum distance of boilers from vertical bulkheads and fuel tanks

a) The distance between boilers and vertical bulkheads is to be not less than the minimum distance necessary to provide access for inspection and maintenance of the structure adjacent to the boiler.

b) In addition to the requirement in a), the distance of boilers from fuel oil tanks is to be such as to prevent the possibility that the temperature of the tank bulkhead may approach the flash point of the oil.

c) In any event, the distance between a boiler and a vertical bulkhead is not to be less than 450 mm.

6.2.3 Minimum distance of boilers from double bottom

a) Where double bottoms in way of boilers may be used to carry fuel oil, the distance between the top of the double bottom and the lower metal parts of the boilers is not to be less than:

- 600 mm, for cylindrical boilers
- 750 mm, for water tube boilers.

b) The minimum distance of vertical tube boilers from double bottoms not intended to carry oil may be 200 mm.

6.2.4 Minimum distance of boilers from ceilings

a) A space sufficient for adequate heat dissipation is to be provided on the top of boilers.

b) Oil tanks are not permitted to be installed in spaces above boilers.

6.2.5 Installation of boilers on engine room flats

Where boilers are installed on an engine room flat and are not separated from the remaining space by means of a watertight bulkhead, a coaming of at least 200 mm in height is to be provided on the flat. The area surrounded by the coaming may be drained into the bilge.

6.2.6 Drip trays and gutterways

Boilers are to be fitted with drip trays and gutterways in way of burners so arranged as to prevent spilling of oil into the bilge.

6.2.7 Hot surfaces

Hot surfaces with which the crew are likely to come into contact during operation are to be suitably guarded or insulated. See Ch 1, Sec 1, [3.7.1].

6.2.8 Registers fitted in the smoke stacks of oil fired boilers

Where registers are fitted in smoke stacks, they are not to obstruct more than two thirds of the cross-sectional area of gas passage when closed. In addition, they are to be provided with means for locking them in open position when the boiler is in operation and for indicating their position and degree of opening.

6.3 Pressure vessels

6.3.1 Safety devices on multiple pressure vessels

Where two or more pressure vessels are interconnected by a piping system of adequate size so that no branch of piping may be shut off, it is sufficient to provide them with one safety valve and one pressure gauge only.

6.4 Thermal oil heaters

6.4.1 In general, the requirements of [6.2] for boilers are also applicable to thermal oil heaters.

7 Material test, workshop inspection and testing, certification

7.1 Material testing

7.1.1 General

Materials, including welding consumables, for the constructions of boilers and pressure vessels are to be certified by the material manufacturer in accordance with the appropriate material specification.

7.1.2 Boilers, other steam generators, and oil fired and exhaust gas thermal oil heaters

In addition to the requirement in [7.1.1], testing of materials intended for the construction of pressure parts of boilers, other steam generators, oil fired thermal oil heaters and exhaust gas thermal oil heaters is to be witnessed by the Surveyor.

7.1.3 Class 1 pressure vessels and heat exchangers

In addition to the requirement in [7.1.1], testing of materials intended for the construction of class 1 pressure parts of pressure vessels and heat exchangers is to be witnessed by the Surveyor.

This requirement may be waived at the Society's discretion for mass produced small pressure vessels (such as accumulators for valve controls, gas bottles, etc.).

7.2 Workshop inspections

7.2.1 Boilers and individually produced class 1 and class 2 pressure vessels

The construction, fitting and testing of boilers and individually produced class 1 and class 2 pressure vessels are to be attended by the Surveyor, at the builder's facility.

7.2.2 Mass produced pressure vessels

Construction of mass produced pressure vessels which are type approved by the Society need not be attended by the Surveyor.

7.3 Hydrostatic tests

7.3.1 General

Hydrostatic tests of all class 1, 2 and 3 pressure vessels are to be witnessed by the Surveyor with the exception of mass produced pressure vessels which are built under the conditions stated in [7.2.2].

7.3.2 Testing pressure

a) Upon completion, pressure parts of boilers and pressure vessels are to be subjected to a hydraulic test under a pressure p_t defined as a function of the design pressure p:
   - $p_t = 1,5\ p$ where $p \leq 4$ MPa
   - $p_t = 1,4\ p + 0,4$ where $4 \text{ MPa} < p \leq 25$ Mpa
   - $P_t = p + 10,4$ where $p > 25$ MPa

b) The test pressure may be determined as a function of a pressure lower than p; however, in such case, the setting and characteristics of the safety valves and other overpressure protective devices are also to be determined and blocked as a function of this lower pressure.

c) If the design temperature exceeds 300°C, the test pressure p_t is to be as determined by the following formula:

$$p_t = 1,5 \cdot \frac{K_{100}}{K} \cdot p$$

where:

p : Design pressure, in MPa

K_{100} : Permissible stress at 100°C, in N/mm^2

K : Permissible stress at the design temperature, in N/mm^2.

d) Consideration is to be given to the reduction of the test pressure below the values stated above where it is necessary to avoid excessive stress. In any event, the general membrane stress is not to exceed 90% of the yield stress at the test temperature.

e) Economisers which cannot be shut off from the boiler in any working condition are to be submitted to a hydraulic test under the same conditions as the boilers.

f) Economisers which can be shut off from the boiler are to be submitted to a hydraulic test at a pressure determined as a function of their actual design pressure p.

7.3.3 Hydraulic test of boiler and pressure vessel accessories

a) Boilers and pressure vessel accessories are to be tested at a pressure p_t which is not less than 1,5 times the design pressure p of the vessels to which they are attached.

b) The test pressure may be determined as a function of a pressure lower than p; however, in such case, the setting and characteristics of the safety valves and other overpressure protective devices are also to be determined and blocked as a function of this lower pressure.

7.3.4 Hydraulic test procedure

a) The hydraulic test specified in [7.3.1] is to be carried out after all openings have been cut out and after execution of all welding work and of the heat treatment, if any. The vessel to be tested is to be presented without lagging, paint or any other lining and the pressure is to be maintained long enough for the Surveyor to proceed with a complete examination.

b) Hydraulic tests of boilers are to be carried out either after installation on board, or at the manufacturer's plant. Where a boiler is hydrotested before installation on board, the Surveyor may, if deemed necessary, request to proceed with a second hydraulic test on board under a pressure at least equal to 1,1 p. For this test, the boiler may be fitted with its lagging. However, the Surveyor may require this lagging to be partially or entirely removed as necessary.

c) For water tube boilers, the hydraulic test may also be carried out separately for different parts of the boiler upon their completion and after heat treatment. For drums and headers, this test may be carried out before drilling the tube holes, but after welding of all appendices and heat treatment. When all parts of the boiler have been separately tested and following assembly the boiler is to undergo a hydraulic test under a pressure of 1,25 p.

7.3.5 Hydraulic tests of condensers

Condensers are to be subjected to a hydrostatic test at the following test pressures:

- steam space: 0,1 MPa
- water space: maximum pressure which may be developed by the pump with closed discharge valve increased by 0,07 MPa. However, the test pressure is not to be less than 0,2 MPa. When the characteristics of the pump are not known, the hydrostatic test is to be carried out at a pressure not less than 0,35 MPa.

7.4 Certification

7.4.1 Certification of boilers and individually produced pressure vessels

Boilers and individually produced pressure vessels of classes 1, 2 and 3 are to be certified by the Society in accordance with the procedures stated in Part A, according to Tab 10.

7.4.2 Mass produced pressure vessels

Small mass produced pressure vessels of classes 1, 2 and 3 may be accepted provided they are type approved by the Society in accordance with the procedures stated in Part A, according to Tab 10.

Table 10 : Pressure vessel certification

Class	Drawing / Calculation		Material testing		Hydraulic test	
	Manufacturer	The Society	Manufacturer	The Society	Manufacturer	The Society
1	X	review	X	witness + workshop inspection	X	witness
2	X	review	X	review	X	witness
3	X	–	X	review	X	witness
Note 1: Certificates of the Manufacturer and the Society to be issued for all cases for pressure vessels covered by the Rules of the Society.						

SECTION 4 OIL FIRING EQUIPMENT

1 General

1.1

1.1.1 Scope

The oil firing equipment of automatically and semi-automatically controlled main and auxiliary boilers and thermal oil heaters is subject to the rule requirements in [2].

The oil burners of hot water generators, oil-fired heaters and small heating appliances which are located in the engine room or in spaces containing equipment important to the operation of the machinery are subject to the rule requirements specified under [3].

In addition, the following general requirements of this Section are mandatory for all installations and appliances.

1.1.2 Documents for review / approval

A sectional drawing of each type of burner together with a description of its mode of operation and circuit diagrams of the electrical control system are to be submitted to the Society for review / approval. Equipment covered by [3] is generally not subject to verification of drawings.

1.1.3 Approved fuels

See Ch 1, Sec 1, [2.9]

1.1.4 Control and monitoring

For control and monitoring requirements, see Ch 1, Sec 3, [5.4].

1.1.5 Boiler equipment and burner arrangement

Oil burners are to be designed, fitted and adjusted in such a manner as to prevent flames from causing damage to the boiler surfaces or tubes which border on the combustion space. Boiler parts which might otherwise suffer damage are to be protected by refractory lining.

The firing system shall be so arranged as to prevent flames from blowing back into the boiler or engine room and shall allow unburnt fuel to be safely drained.

Observation holes and openings in the burner registers for the insertion of ignition torches are to be arranged and closed off by sliding or rotating flaps in such a way that any danger to the operators from flame blowbacks is avoided.

The functioning of explosion doors or rupture disks may not endanger personnel or important items of equipment in the boiler room.

Fuel leaking from potential leak points is to be safely collected in oiltight trays and drained away.

1.1.6 Simultaneous operation of oil burning equipment and internal combustion machinery

The operation of oil burning equipment in spaces containing other items of plant with a high air consumption, e.g. internal combustion engines or air compressors, must not be impaired by variations in the air pressure.

2 Oil firing equipment for boilers and thermal oil heaters

2.1 Preheating of fuel oil

2.1.1 For the preheating of fuel oil any source may be used provided that it can be cut off immediately if the need arises and provided that it can be adequately controlled when in operation. Preheating with open flame is not allowed.

Where fuel oil is heated exclusively by thermal energy from the boiler, it must be possible to heat the boiler from cold with fuel needing no preheating.

After the oil firing equipment has been shut down, the heat retained in the preheater shall not cause an excessive temperature rise in the fuel oil.

The preheating temperature is to be selected so as to avoid foaming or the formation of vapour from water contained in the fuel oil. Also, it may not give rise to harmful effects due to oil vaporization and the carbonization of the heating surfaces.

Temperature or viscosity control must be automatic. For monitoring purposes, a thermometer or viscosimeter is to be fitted to the fuel oil pressure line in front of the burners. Should the oil temperature or viscosity deviate above or below the permitted limits, this must be signalled by an alarm system.

When a change is made from heavy to light oil, the latter may not be passed through the heater or be excessively heated.

The dimensional and constructional design of pressurized fuel oil preheaters is subject to the rules set out in Ch 1, Sec 3, [2].

Besides a temperature controller, electrically heated continuous-flow heaters are to be equipped with a safety thermal cutout.

2.2 Pumps, pipelines, valves and fittings

2.2.1 Fuel oil service pumps may be connected only to the fuel system.

Pipelines must be permanently installed and joined by oiltight welds, oiltight threaded connections of approved design or with flanged joints. Flexible pipes may be used only immediately in front of the burner or to enable the burner to swivel. They must be installed with adequate bending radii and must be protected against undue heating.

For non-metallic flexible pipes and expansion compensators, see Ch 1, Sec 10, [2.6].

Suitable devices, e.g. relief valves, must be fitted to prevent any excessive pressure increase in the fuel oil pump or pressurized fuel lines.

By means of a hand-operated, quick-closing device it must be possible to isolate the fuel supply to the burners from the pressurized fuel lines.

2.3 Safety equipment

2.3.1 Interlocks or control systems must be provided to ensure that safety functions are performed in the correct sequence when the burners are started up or shut down.

Each installation must be equipped with an automatic quick-closing device. This must not release the oil supply to the burners on start-up and must interrupt the oil supply during operation if one of the following faults occurs:

- failure of the required pressure of the atomizing medium (steam and compressed-air atomizers)

  failure of the oil pressure needed for atomization (pressure atomizers), or

  insufficient rotary speed of spinning cup (rotary atomizers)
- failure of combustion air supply
- actuation of limit switches (e.g. for water level or temperature)
- actuation of flame monitor
- failure of control power supply
- failure of induced-draught fan or insufficient opening of exhaust gas register
- burner retracted or pivoted out of position.

Each installation must be shut down automatically and secured if:

- a flame does not develop within the safety period following start-up (see [2.4])
- the flame is extinguished during operation and an attempt to restart the burner within the safety period is unsuccessful, or
- limit switches are actuated.

Oil firing equipment with electrically operated components must also be capable of being shut down by an emergency switch located outside the space in which the equipment is installed.

2.4 Design and construction of burners

2.4.1 For the purpose of these Rules, the following definitions apply:

a) Fully automatic oil burners

   Fully automatic oil burners are burners equipped with automatic igniters, automatic flame monitors and automatic controls so that the ignition, flame monitoring and burner start-up and shutdown are effected as a function of the controlled variable without the intervention of operating personnel.

b) Semi-automatic oil burners

   Semi-automatic oil burners are burners equipped with automatic igniters, automatic flame monitors and automatic controls. Burner start-up is initiated manually. Shutdown may be initiated manually. Burner shutdown is not followed by automatic re-ignition.

c) Manually operated oil burners

   Manually operated oil burners are burners where every ignition sequence is initiated and carried through by hand. The burner is automatically monitored and shut down by the flame monitor and, where required by the safety system, by limiters. Re-starting can only be carried out directly at the burner and by hand.

d) Safety period

   The safety period is the maximum permitted time during which fuel oil may be supplied to the combustion space in the absence of a flame.

The type and design of the burner and its atomizing and air turbulence equipment must ensure virtually complete combustion.

Oil burners must be so designed and constructed that personnel cannot be endangered by moving parts. This applies particularly to blower intake openings. The latter must also be protected to prevent the entry of drip water.

Oil burners are to be so constructed that they can be retracted or pivoted out of the operating position only when the fuel oil supply has been cut off. The high-voltage ignition system must be automatically disconnected when this occurs. A catch is to be provided to hold the burner in the swung out position.

Steam atomizers must be fitted with appliances to prevent fuel oil entering the steam system.

Where dampers or similar devices are fitted in the air supply duct, care must be taken to ensure that air for purging the combustion space is always available unless the oil supply is positively interrupted.

Where an installation comprises several burners supplied with combustion air by a common fan, each burner must be fitted with a shutoff device (e.g. a flap). Means must be provided for retaining the shutoff device in position and its position must be indicated.

Every burner must be equipped with an igniter. The ignition operation is to be initiated immediately following purging. In the case of low-capacity burners of monobloc type (permanently coupled oil pump and blower impeller) ignition may begin with start-up of the burner unless the latter is located in the roof of the chamber.

Every burner is to be equipped with a safety device for flame monitoring. This appliance must comply with the following safety periods on burner start-up or when the flame is extinguished in operation:

- on start-up 5 seconds
- in operation 1 second.

Where this is justified, longer safety periods may be permitted for burners with an oil throughput of up to 30 kg/h. Steps must be taken to ensure that the safety period for the main flame is not prolonged by the action of the igniter (e.g. pilot burners).

2.5 Purging of combustion chamber and flues, exhaust gas ducting

2.5.1 The combustion chamber and flues are to be adequately purged with air prior to every burner start-up. On manually operated equipment, a warning sign is to be mounted to this effect.

A threefold renewal of the total air volume of the combustion spaces and the flue gas ducts up to the funnel inlet is considered sufficient. Normally purging shall be performed with the total flow of combustion air for at least 15 seconds. It shall, however, in any case be performed with at least 50% of the volume of combustion air needed for the maximum rating of the burner system.

By-passes and dead corners in the exhaust gas ducting are to be avoided.

Dampers in uptakes and funnels should be avoided. Any dampers which may be fitted must be so installed that no oil supply is possible when the cross-section of the purge line is reduced below a certain minimum value. The position of the damper must be indicated at the boiler control platform.

Where an induced-draught fan is fitted, an interlocking system must prevent start-up of the burner equipment before the fan has started. A corresponding interlocking system is also to be provided for any covers which may be fitted to the funnel opening.

2.6 Electrical equipment

2.6.1 Electrical controls, safety appliances and their types of enclosure must comply with the provisions of Part C, Chapter 2, Rules for Electrical Installations.

Safety appliances and flame monitors must be self-monitoring and must be connected in such a way as to prevent the supply of oil in the event of a break in the circuitry of the automatic oil burning system.

2.7 Emergency operation

2.7.1 Should the automatic control and monitoring systems malfunction, the safety appliances may be by-passed only by means of a key-operated switch. An effort should be made to ensure that safety functions, e.g. limiter responses, can be individually by-passed.

The flame monitoring system must remain operative even during emergency operation.

2.8 Testing

2.8.1 The fitted installation is to be subjected to operational testing including, in particular, determination of the purging time required prior to burner start-up. Satisfactory combustion at all load settings and the reliable operation of the safety equipment are to be checked. Following installation, the pressurized fuel oil system is to be subjected to a pressure and tightness test; see Ch 1, Sec 10, [20].

3 Oil burners for hot water generators oil fired heaters and small heating appliances

3.1 Atomizer burners

3.1.1 Fully and semi-automatic atomizer burners must meet the requirements of recognized standards or must be recognized as equivalent. Adequate purging by means of a fan must be ensured prior to each ignition effected by the controls. In general, a purging period of at least 5 seconds may be deemed sufficient. Where the flue gas ducting is unfavorable, the purging time is to be extended accordingly.

Electrical components and their type of enclosure must comply with Part C, Chapter 2, Rules for Electrical Installations. High-voltage igniters must be adequately protected against unauthorized interference.

Where dampers or similar devices are mounted in the air supply line, care must be taken to ensure that air is available in all circumstances for purging the combustion space.

Pivoted oil burners must be so constructed that they can be swivelled out only after the fuel oil has been cut off. The high-voltage ignition equipment must likewise be disconnected when this happens.

The plant must also be capable of being shut down by means of an emergency switch located outside the space in which the plant is installed.

3.2 Evaporation burners

3.2.1 The burner design (e.g. dish or pot-type burner) must ensure that the combustion of the fuel oil is as complete as possible at all load settings. At the maximum oil level and with all possible angles of inclination of the vessel (see Ch 1, Sec 1), no fuel oil may spill from the combustion vessel or its air holes. Parts of the equipment important for the operation, monitoring and cleaning of the plant must be readily accessible.

Burners must be fitted with regulators ensuring a virtually constant flow of fuel oil at the selected setting. A safety device is required to prevent the oil in the combustion vessel from rising above the maximum permitted level. The regulators must function reliably despite all movements and inclinations of the vessel.

Burners are normally to be equipped with a blower to ensure a sufficient supply of combustion air. Should the blower fail, the oil feed must be cut off automatically. Heating equipment with burners not supplied by a blower may only be installed and operated in the spaces mentioned in [1.1] provided a supply of air adequate to maintain trouble-free combustion is guaranteed.

3.3 Oil fired burners

3.3.1 Oil-fired heaters having an evaporation burner without blower may be installed in the spaces mentioned in [1.1] only if their thermal capacity does not exceed 42000 kJ/h. They may only be operated, however, if items of equipment with a high air consumption such as internal combustion engines or air compressors do not draw air

from the same space. Compliance is to be ensured by an appropriate directive in the operating instructions and by a warning sign fixed to such heaters. Attention is also to be drawn to the danger of blowbacks when the burner is reignited in the hot heater.

Oil-fired heaters must comply with the requirements of recognized standards and be tested and approved accordingly, or must be recognized as equivalent. Control and safety equipment must ensure the safe and reliable operation of the burner despite all movements and inclinations of the vessel.

Smoke tubes and uptakes must have a cross-section at least equal to that of the flue pipe on the heater and must follow as direct a path as possible. Horizontal flue spans are to be avoided. Funnel (stack) outlets are to be fitted with safety appliances (e.g. Meidinger discs) to prevent downdraughts.

3.4 Small oil-fired heaters for heating air

3.4.1 Depending on their mode of operation, the requirements set out in [3.1] to [3.3] apply in analogous manner to these units.

Equipment which does not entirely meet the requirements of the standards mentioned can be allowed provided that its functional safety is assured by other means, e.g. by the explosion-proofing of the combustion chamber and exhaust ducts.

Heating ducts are to be competently installed in accordance with the manufacturer's installation and operating instructions, and reductions in cross-section, throttling points and sharp bends are to be avoided so as not to incur the danger of the equipment overheating. A thermostatic control must shut the appliance down in the event of overheating.

SECTION 5 WINDLASSES

1 General

1.1 Scope

1.1.1 The requirements of this Section apply to bow anchor windlasses, stern anchor windlasses and wire rope windlasses. For anchors, chains and ropes, see Rules for Equipment in Pt B, Ch 7, Sec 4.

1.2 Compliance requirements

1.2.1 The design, construction and testing of windlasses are to comply with the applicable requirements of the Rule Note NR626 Anchor windlass considering the windlass brake capacity defined in [1.4].

1.3 Type of drive

1.3.1 Windlasses are normally to be driven by an engine which is independent of other deck machinery. The piping systems of hydraulic windlass engines may be connected to other hydraulic systems provided that this is permissible for the latter.

Manual operation as the main driving power can be allowed for anchors with a weight up to 250 kg.

1.4 Brake capacity

1.4.1 Based on mooring line arrangements with brakes engaged and cable lifter disengaged, the capacity HL (Holding Load), in kN, of the windlass brake is to be sufficient to withstand the following loads without any permanent deformation of the stressed parts and without brake slip:

- 0,8 times the breaking load BL of the chain, if not combined with a chain stopper
- 0,45 times the breaking load BL of the chain, if combined with a chain stopper.

2 Materials

2.1 Approved materials

2.1.1 The provisions contained in NR216 Materials and Welding are to be applied as appropriate to the choice of materials.

2.2 Testing of materials

2.2.1 The material of components which are stressed by the pull of the chain when the cable lifter is disengaged (main shaft, cable lifter, brake bands, brake spindles, brake bolts, tension strap) must possess mechanical characteristics in conformity with NR216 Materials and Welding. Evidence of this may take the form of a certificate issued by the steelmaker which contains details of composition and the results of the tests prescribed in NR216 Materials and Welding.

In the case of hydraulic systems, the material used for pipes as well as for pressure vessels is also to be tested.

3 Arrangement

3.1 Overload protection

3.1.1 For protection of the mechanical parts in the case of the windlass jamming, an overload protection (e.g. slip coupling, relief valve) is to be fitted to limit the maximum torque of the drive engine. The setting of the overload protection is to be specified (e.g. in the operating instructions).

3.2 Clutches

3.2.1 Windlasses are to be fitted with disengageable clutches between the cable lifter and the drive shaft. In an emergency case, hydraulic or electrically operated clutches must be capable of being disengaged by hand.

3.3 Connection with deck

3.3.1 The windlass, the foundation and the stoppers have to be connected efficiently and safely to the deck.

4 Powering equipment

4.1 Electrical systems

4.1.1 Electrical systems, when employed for driving windlasses, are to comply with Part C, Chapter 2.

4.2 Hydraulic systems

4.2.1 Hydraulic systems, when employed for driving windlasses, are to comply with Ch 1, Sec 10, [14].

4.2.2 Tanks forming part of the hydraulic system are to be fitted with oil level indicators.

The lowest permissible oil level is to be monitored.

Filters for cleaning the operating fluid are to be located in the piping system.

SECTION 6 GEARING

1 General

1.1 Application

1.1.1 Unless otherwise specified, the requirements of this Section apply to:

- reduction and/or reverse gears intended for propulsion plants with a transmitted power of 220 kW and above
- other reduction and step-up gears with a transmitted power of 110 kW and above.

Additional requirements for gears fitted to vessels having additional class notation **Ice** are given in Pt D, Ch 2, Sec 1.

1.2 Documentation to be submitted

1.2.1 Documents

Before starting construction, all plans, specifications and calculations listed in Tab 1 are to be submitted to the Society.

1.2.2 Data

The data listed in Table 2 to Table 4 of NR467, Pt C, Ch 1, Sec 6 are to be submitted with the documents required in [1.2.1].

Table 1 : Documents to be submitted for gearing

Item No.	Status of the review **(1)**	Description of the document **(2)**
1	A	Constructional drawings of shafts and flanges
2	A	Constructional drawings of pinions and wheels, including: a) specification and details of hardening procedure: • core and surface mechanical characteristics • diagram of the depth of the hardened layer as a function of hardness values b) specification and details of the finishing procedure: • finishing method of tooth flanks (hobbing, shaving, lapping, grinding, shot-peening) • surface roughness for tooth flank and root fillet • tooth flank corrections (helix modification, crowning, tip-relief, end-relief), if any • grade of accuracy according to ISO 1328-1 1997
3	A	Shrinkage calculation for shrunk-on pinions, wheels rims and/or hubs with indication of the minimum and maximum shrinkage allowances
4	A	Calculation of load capacity of the gears
5	A / I **(3)**	Constructional drawings of casings
6	A	Functional diagram of the lubricating system, with indication of: • specified grade of lubricating oil • expected oil temperature in service • kinematic viscosity of the oil
7	A	Functional diagram of control, monitoring and safety systems
8	I	Longitudinal and transverse cross-sectional assembly of the gearing, with indication of the type of clutch
9	I	Data form for calculation of gears
10	I	Detailed justification of material quality used for gearing calculation (ML, MQ, or ME according to ISO 6336-5)

(1) Submission of the drawings may be requested:
- for review, shown as "A" in the Table
- for information, shown as "I" in the Table.

(2) Constructional drawings are to be accompanied by the specification of the materials employed including the chemical composition, heat treatment and mechanical properties and, where applicable, the welding details, welding procedure and stress relieving procedure.

(3) "A" for welded casing, "I" otherwise.

2 Design of gears - Determination of the load capacity

2.1 General

2.1.1 The determination of the load capacity is to be performed in compliance with:

- NR467, Pt C, Ch 1, Sec 6, [2], for cylindrical gears
- NR467, Pt C, Ch 1, Sec 6, [3], for bevel gears.

3 Design and construction - except tooth load capacity

3.1 Materials

3.1.1 General

a) Forged, rolled and cast materials used in the manufacturing of shafts, couplings, pinions and wheels are to comply with the requirements of NR216 Materials and Welding.

b) Materials other than steels will be given special consideration by the Society.

3.1.2 Steels for pinions and wheel rims

a) Steels intended for pinions and wheels are to be selected considering their compatibility in service. In particular, for through-hardened pinion / wheel pairs, the hardness of the pinion teeth is to exceed that of the corresponding wheel. For this purpose, the minimum tensile strength of the pinion material is to exceed that of the wheel by at least 15%.

b) The minimum tensile strength of the core is not to be less than:

- 750 N/mm^2 for case-hardened teeth
- 800 N/mm^2 for induction-hardened or nitrided teeth.

3.2 Teeth

3.2.1 Manufacturing accuracy

a) Mean roughness (peak-to-valley) of shaved or ground teeth is not to exceed 4 µm.

b) Wheels are to be cut by cutters with a method suitable for the expected type and quality. Whenever necessary, the cutting is to be carried out in a temperature-controlled environment.

3.2.2 Tooth root

Teeth are to be well faired and rounded at the root. The fillet radius at the root of the teeth, within a plane normal to the teeth, is to be not less than 0,25 times the normal module (m_n).

Profile-grinding of gear teeth is to be performed in such a way that no notches are left in the fillet.

3.2.3 Tooth tips and ends

a) All sharp edges on the tips and ends of gear teeth are to be removed after cutting and finishing of teeth.

b) Where the ratio b/d exceeds 0,3, the ends of pinion and wheel are to be chamfered to an angle between 45 and 60 degrees. The chamfering depth is to be at least equal to 1,5 m_n.

3.2.4 Surface treatment

a) The hardened layer on surface-hardened gear teeth is to be uniform and extended over the whole tooth flank and fillet.

b) Where the pinions and the toothed portions of the wheels are case-hardened and tempered, the teeth flanks are to be ground while the bottom lands of the teeth remain only case-hardened. The superficial hardness of the case-hardened zone is to be at least equal to 56 C Rockwell units.

c) Where the pinions and the toothed portions of the wheels are nitrided, the hardened layer is to comply with Tab 2.

d) The use of other processes of superficial hardening of the teeth, such as flame hardening, will be given special consideration, in particular as regards the values to be adopted for the endurance limit for contact stress (herzian pressure) $\sigma_{H,lim}$ and the endurance limit for tooth root bending stress σ_{FE}.

Table 2 : Characteristics of the hardened layer for nitrided gears

Type of steel	Minimum thickness of hardened layer, in mm **(1)**	Minimum hardness (HV)
Nitrided steel	0,6	500 (at 0,25 mm depth)
Other steels	0,3	450 (surface)

(1) Depth of the hardened layer where the hardness is reduced to the core hardness.
When the grinding of nitrided teeth is performed, the depth of the hardened layer to be taken into account is the depth after grinding.

3.3 Wheels and pinions

3.3.1 General

Wheel bodies are to be so designed that radial deflections and distortions under load are prevented, so as to ensure a satisfactory meshing of teeth.

3.3.2 Welding

a) Where welding is employed for the construction of wheels, the welding procedure is to be submitted to the Society for approval. Welding processes and their qualification are to comply with NR216 Materials and Welding.

b) Stress relieving treatment is to be performed after welding.

c) Examination of the welded joints is to be performed by means of magnetic particle or dye penetrant tests to the satisfaction of the Surveyor. Suitable arrangements are to be made to permit the examination of the internal side of the welded joints.

3.3.3 Shrink-fits

a) The shrink-fit assembly of:
- rim and wheel body, and
- wheel body and shaft,

is to be designed with a safety factor against slippage of not less than 2,8 c where:

c : Coefficient equal to:
- 1,0 for gears driven by turbines or electric motors
- 1,0 for gears driven by diesel engines through a hydraulic, electromagnetic or high elasticity coupling
- 1,2 in the other cases.

Note 1: The manufacturer is to ensure that the maximum torque transmitted during the clutch engagement does not exceed the nominal torque by more than 20%.

b) The shrink-fit assembly is to take into account the thermal expansion differential between the shrunk-on parts in the service conditions.

3.3.4 Bolting

Where rims and hubs are joined together through bolted side plates or flanges, the assembly is to be secured by:
- tight fit bolts, or
- bolts and tight fit pins.

The nuts are to be suitably locked by means other than welding.

3.4 Shafts and bearings

3.4.1 General

Shafts and their connections, in particular flange couplings and shrink-fits connections, are to comply with the provisions of Ch 1, Sec 7.

3.4.2 Pinion and wheel shafts

The minimum diameter of pinion and gear wheel shafts is not to be less than the value d_S, in mm, given by the following formula:

$$d_S = \left\{ \left[\left(10{,}2 + \frac{28000}{R_{S,min}} \right) T \right]^2 + \left[\frac{170000}{412 + R_{s,min}} M \right]^2 \right\}^{\frac{1}{6}} \left(\frac{1}{1 - K_d^4} \right)^{\frac{1}{3}}$$

where:

$R_{S,min}$: Minimum yield strength of the shaft material, in N/mm²

T : Nominal torque transmitted by the shaft, in Nm

M : Bending moment on the shaft, in Nm

K_d : Coefficient having the following values:
- for solid shafts: $K_d = 0$
- for hollow shafts, K_d is equal to the ratio of the hole diameter to the outer shaft diameter.

Where $K_d \leq 0{,}3$, K_d may be taken equal to 0.

Note 1: The values of d_S, T and M refer to the cross-section of the shaft concerned.

As an alternative to the above formula, the Society may accept direct strength calculations considering static and fatigue stresses occurring simultaneously and assuming safety factors for the material employed of at least:
- 1,5 in respect of the yield strength
- 2,0 in respect of the alternating bending fatigue limit.

3.4.3 Quill shafts

The minimum diameter of quill shafts subject to torque only is not to be less than the value d_{QS}, in mm, given by the following formula:

$$d_{QS} = \left[\left(7{,}65 + \frac{27000}{R_{S,min}} \right) \cdot \frac{T}{1 - K_d^4} \right]^{\frac{1}{3}}$$

with:

$R_{S,min}$, K_d: As defined in [3.4.2].

3.4.4 Bearings

a) Thrust bearings and their supports are to be so designed as to avoid detrimental deflections under load.

b) Life duration of bearings is not to be less than 40 000 hours. Shorter durations may be accepted on the basis of the actual load time distribution, and subject to the agreement of the owner.

3.5 Casings

3.5.1 General

Manufacturers are to build gear casings of sufficient stiffness such that misalignment, external loads and thermal effects in all service conditions do not adversely affect the overall tooth contact.

3.5.2 Welded casings

a) Carbon content of steels used for the construction of welded casings is to comply with the provisions of NR216 Materials and Welding.

b) The welded joints are to be so arranged that welding and inspection can be performed satisfactorily. They are to be of the full penetration type.

c) Welded casings are to be stress-relieved after welding.

3.5.3 Openings

Access or inspection openings of sufficient size are to be provided to permit the examination of the teeth and the structure of the wheels.

3.6 Lubrication

3.6.1 General

a) Manufacturers are to take care of the following points:
- reliable lubrication of gear meshes and bearings is ensured:
  - over the whole speed range, including starting, stopping and, where applicable, manoeuvring
  - for all angles stated in Ch 1, Sec 1, [2.4]
- in multi-propellers plants not fitted with shaft brakes, provision is to be made to ensure lubrication of gears likely to be affected by windmilling.

b) Lubrication by means other than oil circulation under pressure will be given special consideration.

3.6.2 Pumps

a) Gears intended for propulsion or other essential services are to be provided with:
   - one main lubricating pump, capable of maintaining a sufficient lubrication of the gearbox in the whole speed range, and
   - one standby pump independently driven of at least the same capacity.

b) In the case of:
   - gears having a transmitted power not exceeding 375 kW, or
   - multi-engines plants,

   one of the pumps mentioned in a) may be a spare pump ready to be connected to the reduction gear lubricating oil system, provided disassembling and reassembling operations can be carried out on board in a short time.

3.6.3 Filtration

a) Forced lubrication systems are to be fitted with a device which efficiently filters the oil in the circuit.

b) When fitted to gears intended for propulsion machinery or machinery driving electric propulsion generators, such filters are to be so arranged that they can be easily cleaned without stopping the lubrication of the machines.

4 Installation

4.1 General

4.1.1 Manufacturers and building yards are to take care directly that stiffness of gear seating and alignment conditions of gears are such as not to adversely affect the overall tooth contact and the bearing loads under all operating conditions of the vessel.

4.2 Fitting of gears

4.2.1 Means such as stoppers or fitted bolts are to be arranged in the case of gears subject to propeller thrust. However, where the thrust is transmitted by friction and the relevant safety factor is not less than 2, such means may be omitted.

5 Certification, inspection and testing

5.1 General

5.1.1

a) Inspection and testing of shafts and their connections (flange couplings, hubs, bolts, pins) are to be carried out in accordance with the provisions of Ch 1, Sec 7, [4].

b) For inspection of welded joints of wheels, refer to [3.2.2].

5.2 Workshop inspection and testing

5.2.1 Testing of materials

Chemical composition and mechanical properties are to be tested in accordance with the applicable requirements of NR216 Materials and Welding, Ch 2, Sec 3 for the following items:

- pinions and wheel bodies
- rims
- plates and other elements intended for propulsion gear casings of welded construction.

5.2.2 Testing of pinion and wheel forgings

a) Mechanical tests of pinions and wheels are to be carried out in accordance with:
   - NR216 Materials and Welding, Ch 2, Sec 3, [5.6] for normalised and tempered or quenched and tempered forgings
   - NR216 Materials and Welding, Ch 2, Sec 3, [5.7] for surface-hardened forgings.

b) Non-destructive examination of pinion and wheel forgings is to be performed in accordance with NR216 Materials and Welding, Ch 2, Sec 3, [5.8].

5.2.3 Balancing test

Rotating components, in particular gear wheel and pinion shaft assemblies with the coupling part attached, are to undergo a static balancing test.

Where $n^2 \cdot d \geq 1{,}5 \cdot 10^9$, gear wheel and pinion shaft assemblies are also to undergo a dynamic balancing test.

5.2.4 Verification of cutting accuracy

Examination of the accuracy of tooth cutting is to be performed in the presence of the Surveyor. Records of measurements of errors, tolerances and clearances of teeth are to be submitted at the request of the Surveyor.

5.2.5 Meshing test

a) A tooth meshing test is to be performed in the presence of the Surveyor. This test is to be carried out at a load sufficient to ensure tooth contact, with the journals located in the bearings according to the normal running conditions. Before the test, the tooth surface is to be coated with a thin layer of suitable coloured compound.

b) The results of such test are to demonstrate that the tooth contact is adequately distributed on the length of the teeth. Strong contact marks at the end of the teeth are not acceptable.

c) A permanent record of the tooth contact is to be made for the purpose of subsequent checking of alignment following installation on board.

d) For type approved cylindrical gears, with a power not greater than 375 kW and a cast casing, the above required workshop meshing test could be waived at the Surveyor satisfaction.

5.2.6 Hydrostatic tests

a) Hydraulic or pneumatic clutches are to be hydrostatically tested before assembly to 1,5 times the maximum working pressure of the pumps.

b) Pressure piping, pumps casings, valves and other fittings are to be hydrostatically tested in accordance with the requirements of Ch 1, Sec 10, [20].

SECTION 7 MAIN PROPULSION SHAFTING

1 General

1.1 Application

This Section applies to shafts, couplings, clutches and other shafting components transmitting power for main propulsion. In addition, main propulsion machinery components are to comply with the requirements listed in Tab 1.

Table 1 : Rule requirements for main propulsion components

Item		Reference
Power transmission equipment	Diesel engines	Ch 1, Sec 2
	Propellers	Ch 1, Sec 8
	Gear	Ch 1, Sec 6
	Thrusters	Ch 1, Sec 12
Shaft line analysis	Shaft alignment	[3.3]
	Torsional vibration	Ch 1, Sec 9
Additional requirements	Navigation in ice	Pt D, Ch 2, Sec 1

Table 2 : Documents for review

No.	Document (drawings, calculations, etc.)
1	Shafting arrangement **(1)**
2	Thrust shaft
3	Intermediate shafts
4	Propeller shaft
5	Shaft liners, relevant manufacture and welding procedures, if any
6	Couplings and coupling bolts
7	Flexible couplings **(2)**
8	Sterntube
9	Details of sterntube glands
10	Oil piping diagram for oil lubricated propeller shaft bearings
11	Shaft alignment calculation, see also [3.3]

(1) This drawing is to show the entire shafting, from the main engine coupling flange to the propeller. The location of the thrust block, and the location and number of shafting bearings (type of material and length) are also to be shown.

(2) The Manufacturer of the elastic coupling is also to submit all data necessary to enable the stresses to be evaluated.

1.2 Documents for review

1.2.1 The Manufacturer is to submit to the Society the documents listed in Tab 2 for review.

Plans of power transmitting parts and shaft liners listed in Tab 2 are to include the relevant material specifications.

2 Design and construction

2.1 Materials

2.1.1 General

The use of other materials or steels having values of tensile strength exceeding the limits given in [2.1.2], [2.1.3] and [2.1.4] will be considered by the Society in each case.

2.1.2 Shaft materials

Where shafts may experience vibratory stresses close permissible stresses for transient operation (see Ch 1, Sec 9), the materials are to have a specified minimum ultimate tensile strength R_m of 500 N/mm^2. Otherwise materials having a specified minimum ultimate tensile strength R_m of 400 N/mm^2 may be used.

For use in the following formulae in this Section, R_m is limited as follows:

- for carbon and carbon manganese steels, R_m is not exceed 760 N/mm^2
- for alloy steels, R_m is not to exceed 800 N/mm^2
- for propeller shafts, R_m is not to exceed 600 N/mm^2 (for carbon, carbon manganese and alloy steels).

Where materials with greater specified or actual tensile strengths than the limitations given above are used, reduced shaft dimensions are not acceptable when derived from the formulae given in this Section.

2.1.3 Couplings, flexible couplings, hydraulic couplings

Non-solid forged couplings and stiff parts of elastic couplings subjected to torque are to be of forged or cast steel, or nodular cast iron.

Rotating parts of hydraulic couplings may be of grey cast iron, provided that the peripheral speed does not exceed 40m/s.

2.1.4 Coupling bolts

Coupling bolts are to be of forged, rolled or drawn steel.

In general, the value of the tensile strength of the bolt material R_{mB} is to comply with the following requirements:

- $R_m \leq R_{mB} \leq 1,7\ R_m$
- $R_{mB} \leq 1000$ N/mm^2.

2.1.5 Shaft liners

Liners are to be of metallic corrosion resistant material complying with the applicable requirements of NR216 Materials and Welding and with the approved specification, if any; in the case of liners fabricated in welded lengths, the material is to be recognised as suitable for welding.

In general, they are to be manufactured from castings.

For small shafts, the use of liners manufactured from pipes instead of castings may be considered.

Where shafts are protected against contact with riverwater not by metal liners but by other protective coatings, the coating procedure is to be approved by the Society.

2.1.6 Sterntubes

Sterntubes are to comply with the requirements of Pt B, Ch 6, Sec 2, [4.5].

2.2 Shafts - Scantling

2.2.1 General

The provisions of this sub-article apply to propulsion shafts such as an intermediate and propeller shafts of traditional straight forged design and which are driven by rotating machines such as diesel engines, turbines or electric motors.

For shafts that are integral to equipment, such as for gear boxes, podded drives, electrical motors and/or generators, thrusters, turbines and which in general incorporate particular design features, additional criteria in relation to acceptable dimensions have to be taken into account. For the shafts in such equipment, the provisions of this sub-article apply only to shafts subject mainly to torsion and having traditional design features. Other shafts will be given special consideration by the Society.

2.2.2 Alternative calculation methods

Alternative calculation methods may be considered by the Society. Any alternative calculation method is to include all relevant loads on the complete dynamic shafting system under all permissible operating conditions. Consideration is to be given to the dimensions and arrangements of all shaft connections.

Moreover, an alternative calculation method is to take into account design criteria for continuous and transient operating loads (dimensioning for fatigue strength) and for peak operating loads (dimensioning for yield strength). The fatigue strength analysis may be carried out separately for different load assumptions.

2.2.3 Shafts diameters

The diameter of intermediate shafts, thrust shafts and propellers shafts is not to be less than that determined from the following formula:

$$d = F \cdot k \cdot \left[\frac{P}{n \cdot (1 - Q^4)} \cdot \frac{560}{R_m + 160} \right]^{1/3}$$

where:

d : Minimum required diameter, in mm

Q : Factor equal to d_i/d_o, where:

d_i : Actual diameter of the shaft bore, in mm (to be taken as 0 for solid shafts)

d_o : Outside diameter of the shaft, in mm

Note 1: Where $d_i \leq 0,4\ d_o$, Q may be taken equal to 0.

F : Factor for type of propulsion installation:

- F = 90 for intermediate and thrust shafts in turbine installations, diesel installations with hydraulic (slip type) couplings and electric propulsion installations
- F = 94 for all other diesel installation and all propeller shafts

k : Factor for the particular shaft design features, see Tab 3

n : Speed of rotation of the shaft, in revolution per minute, corresponding to power P

P : Maximum continuous power of the propulsion machinery, in kW, for which the classification is requested

R_m : Specified minimum tensile strength of the shaft material, in N/mm^2, see [2.1.2].

The diameter of the propeller shaft located forward of the inboard stern tube seal may be gradually reduced to the corresponding diameter required for the intermediate shaft using the minimum specified tensile strength of the propeller shaft in the formula and recognising any limitations given in [2.1.2].

Note 2: Transitions of diameters are to be designed with either a smooth taper or a blending radius equal to the change in diameter.

2.3 Liners

2.3.1 General

Metal liners or other protective coatings approved by the Society are required where propeller shafts are not made of corrosion-resistant material.

Metal liners are generally to be continuous; however, discontinuous liners, i.e. liners consisting of two or more separate lengths, may be accepted by the Society on a case by case basis, provided that:

- they are fitted in way of all supports
- the shaft portion between liners, likely to come into contact with river/sea water, is protected with a coating of suitable material with characteristics, fitting method and thickness approved by the Society.

2.3.2 Scantling

The thickness of metal liners fitted on propeller shafts or on intermediate shafts inside sterntubes is to be not less than the value t, in mm, given by the following formula:

$$t = \frac{75d}{d + 1000}$$

where:

d : Actual diameter of the shaft, in mm.

Between the sternbushes, the above thickness t may be reduced by 25%.

Table 3 : Values of factor k

Intermediate shafts with						Thrust shafts external to engines		Propeller shafts		
straight sections and integral coupling flange **(1)**	shrink fit coupling **(2)**	keyway, tapered connection **(3) (4)**	keyway, cylindrical connection **(3) (4)**	radial hole **(5)**	longitudinal slots **(6)**	on both sides of thrust collar **(1)**	in way of bearing when a roller bearing is used	flange mounted or keyless taper fitted propellers **(7)**	key fitted propellers **(7)**	between forward end of aft most bearing and forward stern tube seal
1,00	1,00	1,10	1,10	1,10	1,20	1,10	1,10	1,22	1,26	1,15

(1) The fillet radius is to be in accordance with the provisions of [2.5.1].

(2) k values refer to the plain shaft section only. Where shafts may experience vibratory stresses close to permissible stresses for continuous operation, an increase in diameter to the shrink fit diameter is to be provided, e.g. a diameter increase of 1 to 2% and a blending radius as described in Note 2 of [2.2.3].

(3) At a distance of not less than 0,2 d_o from the end of the keyway the shaft diameter may be reduced to the diameter calculated with k = 1,0.

(4) Keyways are to be in accordance with the provisions of [2.5.5].

(5) Diameter of the radial bore is not to exceed 0,3 d_o.

(6) Subject to limitations as $\ell/d_o < 0,8$ and $d_i/d_o < 0,8$ and $e/d_o > 0,1$ where:

ℓ : Slot length, in mm

e : Slot width, in mm.

The end rounding of the slot is not to be less than e/2. An edge rounding should preferably be avoided as this increases the stress concentration slightly.

The k value is valid for 1, 2, 3 slots, i.e. with slots at, respectively, 360 degrees, 180 degrees and 120 degrees apart.

(7) Applicable to the portion of the propeller shaft between the forward edge of the aftermost shaft bearing and the forward face of the propeller hub (or shaft flange), but not less than 2,5 times the required diameter.

2.4 Stern tube bearings

2.4.1 Oil lubricated aft bearings of antifriction metal

a) The length of bearings lined with white metal or other antifriction metal and with oil glands of a type approved by the Society is to be not less than twice the rule diameter of the shaft in way of the bearing.

b) The length of the bearing may be less than that given in (a) above, provided the nominal bearing pressure is not more than 0,8 N/mm^2, as determined by static bearing reaction calculations taking into account shaft and propeller weight, as exerting solely on the aft bearing, divided by the projected area of the shaft.

However, the minimum bearing length is to be not less than 1,5 times its actual inner diameter.

2.4.2 Oil lubricated aft bearings of synthetic rubber, reinforced resin or plastics material

a) For bearings of synthetic rubber, reinforced resin or plastics material which are approved by the Society for use as oil lubricated sternbush bearings, the length of the bearing is to be not less than twice the rule diameter of the shaft in way of the bearing.

b) The length of the bearing may be less than that given in (a) above provided the nominal bearing pressure is not more than 0,6 N/mm^2, as determined according to [2.4.1], item b).

However, the minimum length of the bearing is to be not less than 1,5 times its actual inner diameter.

Where the material has proven satisfactory testing and operating experience, consideration may be given to an increased bearing pressure.

c) Synthetic materials for application as oil lubricated stern tube bearings are to be of an approved type.

2.4.3 Water lubricated aft bearings

a) The length of the bearing is to be not less than 4 times the rule diameter of the shaft in way of the bearing.

b) For a bearing of synthetic material, consideration may be given to a bearing length less than 4 times, but in no case less than 2 times, the rule diameter of the shaft in way of the bearing, provided the bearing design and material is substantiated by experiments to the satisfaction of the Society.

c) Synthetic materials for application as water lubricated stern tube bearings are to be Type Approved by the Society.

2.4.4 Grease lubricated aft bearings

The length of grease lubricated bearings is to be not less than 4 times the rule diameter of the shaft in way of the bearing.

2.4.5 Oil or grease lubrication system

a) For oil lubricated bearings, provision for oil cooling is to be made.

A gravity tank is to be fitted to supply lubricating oil to the sterntube; the tank is to be located above the full load waterline.

Oil sealing glands are to be suitable for the various sea water temperatures which may be encountered in service.

b) Grease lubricated bearings will be specially considered by the Society.

2.4.6 Water circulation system

For water lubricated bearings, means are to be provided to ensure efficient water circulation. In case of open loop systems, the river water suction is normally to be from a river chest.

The water grooves on the bearings are to be of ample section such as to ensure efficient water circulation and be scarcely affected by wear-down, particularly for bearings of the plastic type.

The shut-off valve or cock controlling the water supply is to be fitted direct to the stuffing box bulkhead or in way of the water inlet to the sterntube, when this is fitted forward of such bulkhead.

2.5 Couplings

2.5.1 Flange couplings

a) Flange couplings of intermediate and thrust shafts and the flange of the forward coupling of the propeller shaft are to have a thickness not less than 0,2 times the rule diameter of the solid intermediate shaft and not less than the coupling bolt diameter calculated for a tensile strength equal to that of the corresponding shaft.

The fillet radius at the base of solid forged flanges is to be not less than 0,08 times the actual shaft diameter.

The fillet may be formed of multi-radii in such a way that the stress concentration factor will not be greater than that for a circular fillet with radius 0,08 times the actual shaft diameter.

For non-solid forged flange couplings, the above fillet radius is not to cause a stress in the fillet higher than that caused in the solid forged flange as above.

Fillets are to have a smooth finish and are not to be recessed in way of nuts and bolt heads.

b) Where the propeller is connected to an integral propeller shaft flange, the thickness of the flange is to be not less than 0,25 times the rule diameter of the aft part of the propeller shaft. The fillet radius at the base of the flange is to be not less than 0,125 times the actual diameter.

The strength of coupling bolts of the propeller boss to the flange is to be equivalent to that of the aft part of the propeller shaft.

c) Non-solid forged flange couplings and associated keys are to be of a strength equivalent to that of the shaft.

They are to be carefully fitted and shrunk on to the shafts, and the connection is to be such as to reliably resist the vibratory torque and astern pull.

d) For couplings of intermediate and thrust shafts and for the forward coupling of the propeller shaft having all fitted coupling bolts, the coupling bolt diameter in way of the joining faces of flanges is not to be less than the value d_B, in mm, given by the following formula:

$$d_B = 0,65 \cdot \left[\frac{d^3 \cdot (R_m + 160)}{n_B \cdot D_C \cdot R_{mB}} \right]^{0,5}$$

where:

d : Rule diameter of solid intermediate shaft, in mm, taking into account the ice strengthening requirements of Pt D, Ch 2, Sec 1, where applicable

n_B : Number of fitted coupling bolts

D_C : Pitch circle diameter of coupling bolts, in mm

R_m : Value of the minimum tensile strength of intermediate shaft material taken for calculation of d, in N/mm^2

R_{mB} : Value of the minimum tensile strength of coupling bolt material, in N/mm^2. Where, in compliance with [2.1.1], the use of a steel having R_{mB} in excess of the limits specified in [2.1.4] is allowed for coupling bolts, the value of R_{mB} to be introduced in the formula is not exceed the above limits.

e) Flange couplings with non-fitted coupling bolts may be accepted on the basis of the calculation of bolt tightening, bolt stress due to tightening, and assembly instructions.

To this end, the torque based on friction between the mating surfaces of flanges is not to be less than 2,8 times the transmitted torque, assuming a friction coefficient for steel on steel of 0,18 (see Note 1). In addition, the bolt stress due to tightening in way of the minimum cross-section is not to exceed 0,8 times the minimum yield strength (R_{eH}), or 0,2 proof stress ($R_{p\,0,2}$), of the bolt material.

Transmitted torque has the following meanings:

- For main propulsion systems powered by diesel engines fitted with slip type or high elasticity couplings, by turbines or by electric motors: the mean transmitted torque corresponding to the maximum continuous power P and the relevant speed of rotation n, as defined under [2.2.3].
- For main propulsion systems powered by diesel engines fitted with couplings other than those mentioned in (a): the mean torque above increased by 20% or by the torque due to torsional vibrations, whichever is the greater.

Note 1: The value 2,8 may be reduced to 2,5 in the following cases:

- vessels having two or more main propulsion shafts
- when the transmitted torque is obtained, for the whole functioning rotational speed range, as the sum of the nominal torque and the alternate torque due to the torsional vibrations, calculated as required in Ch 1, Sec 9.

2.5.2 Shrunk couplings

Non-integral couplings which are shrunk on the shaft by means of the oil pressure injection method or by other means may be accepted on the basis of the calculation of shrinking and induced stresses, and assembly instructions.

To this end, the force due to friction between the mating surfaces is not to be less than 2,8 times the total force due to the transmitted torque and thrust.

The value 2,8 above may be reduced to 2,5 in the cases specified in Note 1 of [2.5.1].

The values of 0,14 and 0,18 will be taken for the friction coefficient in the case of shrinking under oil pressure and dry shrink fitting, respectively.

In addition, the equivalent stress due to shrinkage determined by means of the von Mises-Hencky criterion in the points of maximum stress of the coupling is not to exceed 0,8 times the minimum yield strength (R_{eH}), or 0,2% proof stress ($R_{p0,2}$), of the material of the part concerned.

The transmitted torque is that defined under item e) of [2.5.1].

For the determination of the thrust, see Ch 1, Sec 8, [3.1.2].

2.5.3 Other couplings

Types of couplings other than those mentioned in [2.5.1] and [2.5.2] will be specially considered by the Society.

2.5.4 Flexible couplings

a) The scantlings of stiff parts of flexible couplings subjected to torque are to be in compliance with the requirements of [2].

b) For flexible components, the limits specified by the Manufacturer relevant to static and dynamic torque, speed of rotation and dissipated power are not to be exceeded.

c) Where all the engine power is transmitted through one flexible component only (vessels with one propulsion engine and one shafting only), the flexible coupling is to be fitted with a torsional limit device or other suitable means to lock the coupling should the flexible component break.

   In stiff transmission conditions with the above locking device, a sufficiently wide speed range is to be provided, free from excessive torsional vibrations, such as to enable safe navigation and steering of the vessel. As an alternative, a spare flexible element is to be provided on board.

2.5.5 Propeller shaft keys and keyways

a) Keyways are in general not to be used in installations with a barred speed range.

b) Keyways on the propeller shaft cone are to have well rounded corners, with the forward end faired and preferably spooned, so as to minimize notch effects and stress concentrations.

   When these constructional features are intended to obtain an extension of the interval between surveys of the propeller shaft in accordance with the relevant provisions of Pt A, Ch 2, Sec 2, [5.5], they are to be in compliance with Fig 1.

   Different scantlings may be accepted, provided that at least the same reduction in stress concentration is ensured.

   The fillet radius at the bottom of the keyway is to be not less than 1,25% of the actual propeller shaft diameter at the large end of the cone.

   The edges of the key are to be rounded.

   The distance from the large end of the propeller shaft cone to the forward end of the key is to be not less than 20% of the actual propeller shaft diameter in way of the large end of the cone.

   Key securing screws are not to be located within the first one-third of the cone length from its large end; the edges of the holes are to be carefully faired.

c) The sectional area of the key subject to shear stress is to be not less than the value A, in mm^2, given by the following formula:

$$A = 0,4 \cdot \frac{d^3}{d_{PM}}$$

   where:

   d : Rule diameter, in mm, of the intermediate shaft calculated in compliance with [2.2.3], assuming R_m = 400 N/mm^2

   d_{PM} : Actual diameter of propeller shaft at mid-length of the key, in mm.

2.6 Monitoring

2.6.1 General

The requirements of Ch 3, Sec 2 apply.

3 Arrangement and installation

3.1 General

3.1.1 The installation is to be carried out according to the instructions of the component Manufacturer or approved documents, when required.

3.1.2 The installation of sterntubes and/or associated non-shrunk bearings is subject to approval of procedures and materials used.

3.1.3 The joints between liner parts are not to be located in way of supports and sealing glands.

Metal liners are to be shrunk on to the shafts by pre-heating or forced on by hydraulic pressure with adequate interference; dowels, screws or other means of securing the liners to the shafts are not acceptable.

3.2 Protection of propeller shaft against corrosion

3.2.1 The propeller shaft surface between the propeller and the sterntube, and in way of propeller nut, is to be suitably protected in order to prevent any entry of river water, unless the shaft is made of austenitic stainless steel.

3.3 Shaft alignment

3.3.1 The alignment of the propulsion machinery and shafting and the spacing and location of the bearings are to be such as to ensure that the loads are compatible with the material used and the limits prescribed by the Manufacturer. The slope in the aft stem tube bearing should normally not exceed 50% of the bearing clearance. The alignment is to be checked on board by the Shipyard by a suitable measurement method.

4 Material tests, workshop inspection and testing, certification

4.1 Material and non-destructive tests, workshop inspections and testing

4.1.1 Material tests

Shafting components are to be tested by the Manufacturer in accordance with Tab 4 and in compliance with the requirements of NR216 Materials and Welding.

4.1.2 Hydrostatic tests

Parts of hydraulic couplings, clutches of hydraulic reverse gears and control units, hubs and hydraulic cylinders of controllable pitch propellers, including piping systems and associated fittings, are to be hydrostatically tested to 1,5 times the maximum working pressure.

Sterntubes, when machine-finished, and propeller shaft liners, when machine-finished on the inside and with an overthickness not exceeding 3 mm on the outside, are to be hydrostatically tested to 0,2 N/mm^2.

4.2 Certification

4.2.1 Testing certification

Society's certificates (C) (see NR216 Materials and Welding, Ch 1, Sec 1, [4.2.1]) are required for material tests of components in items 1 to 5 of Tab 4.

Works' certificates (W) (see NR216 Materials and Welding, Ch 1, Sec 1, [4.2.3]) are required for hydrostatic tests of components indicated in [4.1.2], other than those for which Society's certificates (C) are required.

Figure 1 : Details of forward end of propeller shaft keyway

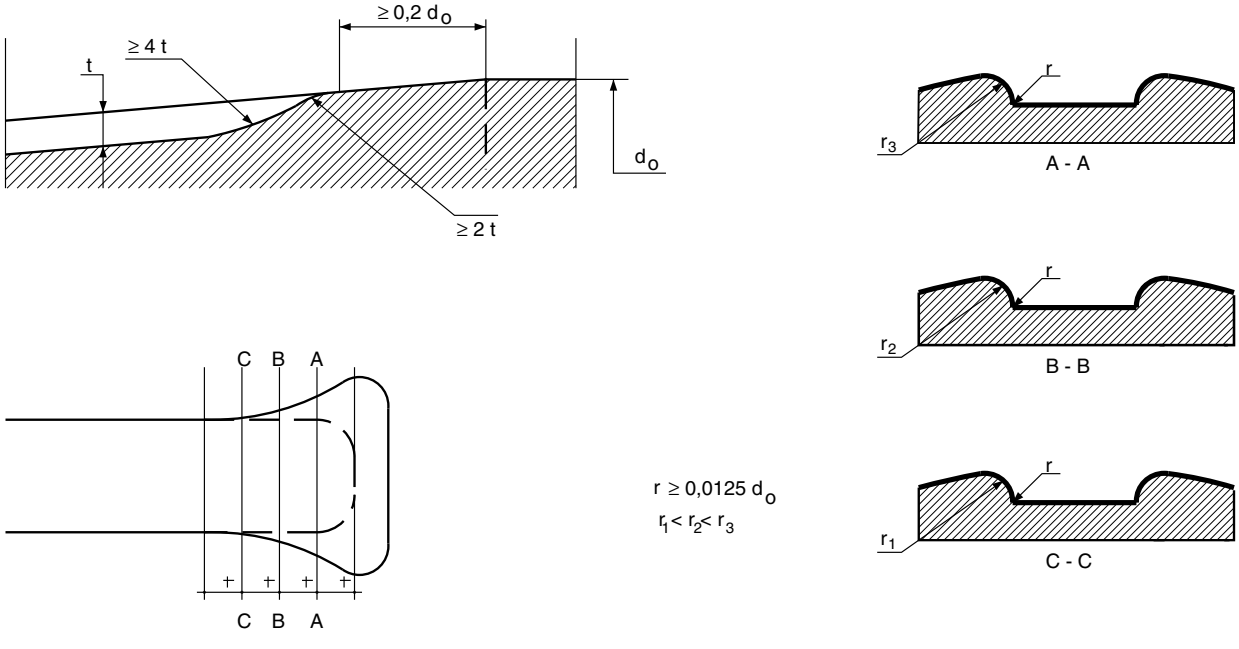

Table 4 : Material and non-destructive tests

	Shafting component	Material tests (Mechanical properties and chemical composition)	Non-destructive tests	
			Magnetic particle or liquid penetrant	Ultrasonic
1	Coupling (separate from shafts)	all	if diameter ≥ 100 mm **(1)**	if diameter ≥ 200 mm **(1)**
2	Propeller shafts			
3	Intermediate shafts			
4	Thrust shafts			
5	Cardan shafts (flanges, crosses, shafts, yokes)			
6	Sterntubes	all	–	–
7	Sterntube bushes and other shaft bearings			
8	Propeller shaft liners			
9	Coupling bolts or studs			
10	Flexible couplings (metallic parts only)			
11	Thrust sliding-blocks (frame only)			
(1) 150 mm in case of a rolled bar used in place of a forging				

SECTION 8 PROPELLERS

1 General

1.1 Application

1.1.1 Propulsion propellers

This Section applies to propellers of any size and type intended for propulsion. They include fixed and controllable pitch propellers, including those ducted in fixed nozzles.

Propellers for vessels with ice strengthening, are additionally subject to provisions of Pt D, Ch 2, Sec 1, [4.3].

1.1.2 Exclusions

The requirements of this Section do not apply to propellers and impellers in rotating or bow and stern thrusters, which are covered in Ch 1, Sec 12.

1.2 Definitions

1.2.1 Solid propeller

A solid propeller is a propeller (including hub and blades) cast in one piece.

1.2.2 Built-up propeller

A built-up propeller is a propeller cast in more than one piece. In general, built up propellers have the blades cast separately and fixed to the hub by a system of bolts and studs.

1.2.3 Controllable pitch propellers

Controllable pitch propellers are built-up propellers which include in the hub a mechanism to rotate the blades in order to have the possibility of controlling the propeller pitch in different service conditions.

1.2.4 Nozzle

A nozzle is a circular structural casing enclosing the propeller.

1.2.5 Ducted propeller

A ducted propeller is a propeller installed in a nozzle.

1.2.6 Geometry of propeller

For all geometrical definitions, see Fig 1.

a) Blade area and area ratio

A_P : Projected blade area, i.e. projection of the blade area in the direction of the propeller shaft

A_D : Developed blade area, i.e. area enclosed by the connection line between the end points of the cylindrical profile sections turned in the propeller plane

A_E : Expanded blade area, i.e. area enclosed by the connection line between the end points of the developed and additionally straightened sections

A_O : Disc area calculated by means of the propeller diameter

B : Developed area ratio with $B = A_D / A_O$

b) Rake and rake angle

h : Rake is the horizontal distance between the line connecting the blade tip to the blade root and the vertical line crossing the propeller axis in the same point where the prolongation of the first line crosses it, taken in correspondence of the blade tip. Aft rakes are considered positive, fore rakes are considered negative.

Rake angle is the angle at any point between the tangent to the generating line of the blade at that point and a vertical line passing at the same point. If the blade generating line is straight, there is only one rake angle; if it is curved there are an infinite number of rake angles.

c) Skew angle at tip of blade

ϑ : Skew angle at the tip of blade, i.e. the angle on the projected blade plane between a line starting at the centre of the propeller axis and tangent to the blade midchord line and a line also starting at the centre of the propeller axis and passing at the outer end of this midchord line as measured.

d) Skewed propellers

Skewed propellers are propellers whose blades have a skew angle other than 0.

e) Highly skewed propellers and very highly skewed propellers

- highly skewed propellers are propellers having blades with skew angle between 25° and 50°
- very highly skewed propellers are propellers having blades with skew angle exceeding 50°.

f) Leading and trailing edges

L_E : Leading edge of a propeller blade, i.e. the edge of the blade at side entering the water while the propeller rotates

T_E : Trailing edge of a propeller blade, i.e. the edge of the blade opposite to the leading edge.

1.2.7 Rake angle

Rake angle is the angle at any point between the tangent to the generating line of the blade at that point and a vertical line passing at the same point. If the blade generating line is straight, there is only one rake angle; if it is curved there are an infinite number of rake angles (see Fig 1).

Figure 1 : Description of propeller

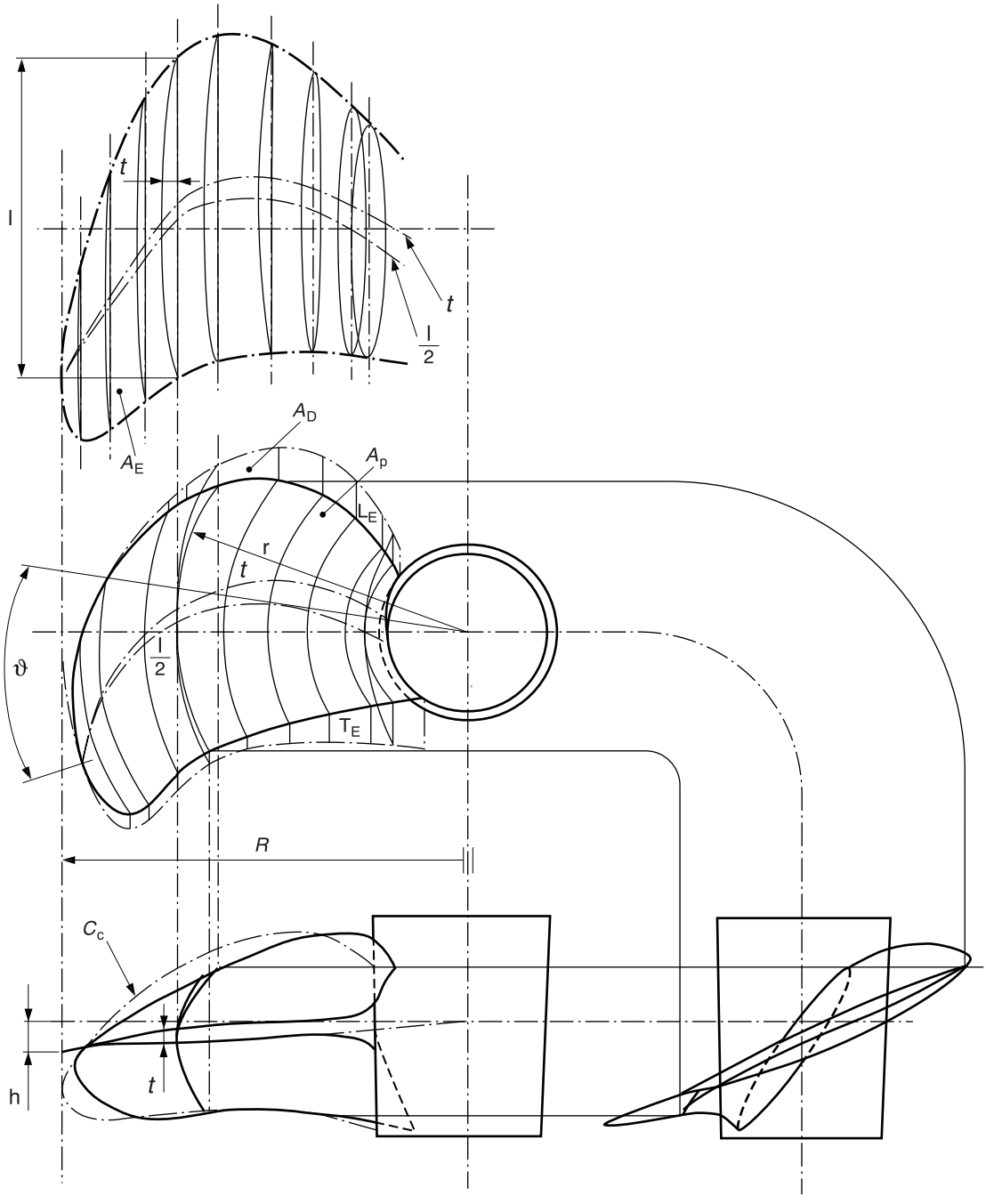

1.2.8 Skew angle

Skew angle is the angle between a ray starting at the center of the propeller axis and tangent to the blade midchord line and a ray also starting at the center of the propeller axis and passing at the blade tip (see Fig 1).

1.2.9 Skewed propellers

Skewed propellers are propellers whose blades have a skew angle other than 0.

1.2.10 Highly skewed propellers and very highly skewed propellers

Highly skewed propellers are propellers having blades with skew angle exceeding 25°. Very highly skewed propellers are propellers having blades with skew angle exceeding 50°.

1.2.11 Leading edge

The leading edge of a propeller blade is the edge of the blade at side entering the water while the propeller rotates (see Fig 1).

1.2.12 Trailing edge

The trailing edge of a propeller blade is the edge of the blade opposite the leading edge (see Fig 1).

1.2.13 Blade developed area

Blade developed area is the area of the blade surface expanded in one plane.

1.2.14 Developed area ratio

Developed area ratio is the ratio of the total blade developed area to the area of the ring included between the propeller diameter and the hub diameter.

1.3 Documents for review

1.3.1 Solid propellers

The documents listed in Tab 1 are to be submitted for solid propellers intended for propulsion.

All listed plans are to be constructional plans complete with all dimensions and are to contain full indication of types of materials employed.

Table 1 : Documents to be submitted for solid propellers

No.	A/ I **(1)**	Item
1	A	Sectional assembly
2	A	Blade and hub details
3	I	Rating (power, rpm, etc.)
4	A	Data and procedures for fitting propeller to the shaft
(1) A : To be submitted for review I : To be submitted for information.		

1.3.2 Built-up and controllable pitch propellers

The documents listed in Tab 2, as applicable, are to be submitted for built-up and controllable pitch propellers intended for propulsion.

Table 2 : Documents to be submitted for built-up and controllable pitch propellers

No	A/ I **(1)**	Item
1	A/ I	Same documents requested for solid propellers
2	A	Blade bolts and pre-tensioning procedures
3	I	Pitch corresponding to maximum propeller thrust and to normal service condition
4	A	Pitch control mechanism
5	A	Pitch control hydraulic system
(1) A : To be submitted for review I : To be submitted for information.		

1.3.3 Very highly skewed propellers and propellers of unusual design

For very highly skewed propellers and propellers of unusual design, in addition to the documents listed in Tab 1 and Tab 2, as applicable, a detailed hydrodynamic load and stress analysis is to be submitted (see [2.4.3]).

2 Design and construction

2.1 Materials

2.1.1 Normally used materials for propeller hubs and blades

a) Tab 3 indicates the minimum tensile strength R_m (in N/mm^2), the density δ (in kg/dm^3) and the material factor f of normally used materials.

b) Common bronze, special types of bronze and cast steel used for the construction of propeller hubs and blades are to have a minimum tensile strength of 400 N/mm^2.

c) Other materials are subject of special consideration by the Society following submission of full material specification.

Table 3 : Normally used materials for propeller blades and hub

Material	R_m	δ	f
Common bronze	400	8,3	7,6
Manganese bronze	440	8,3	7,6
Nickel-manganese bronze	440	8,3	7,9
Aluminium bronze	590	7,6	8,3
Steel	440	7,9	9,0

2.1.2 Materials for studs

In general, steel (preferably nickel-steel) is to be used for manufacturing the studs connecting steel blades to the hub of built-up or controllable pitch propellers, and high tensile brass or stainless steel is to be used for studs connecting bronze blades.

2.2 Solid propellers - Blade thickness

2.2.1

a) The maximum thickness $t_{0.25}$, in mm, of the solid propeller blade at the section at 0,25 radius from the propeller axis is not to be less than that obtained from the following formula:

$$t_{0,25} = 3,2\left[f \cdot \frac{1,5.10^6.\rho.M_T + 51.\delta.\left(\frac{D}{100}\right)^3.B.l.N^2.h}{l \cdot z \cdot R_m}\right]^{0,5}$$

where:

f : Material factor as indicated in Tab 3

$\rho = D / H$

H : Mean pitch of propeller, in m. When H is not known, the pitch at 0,7 radius from the propeller axis $H_{0,7}$ may be used instead of H

D : Propeller diameter, in m

M_T : Continuous transmitted torque, in kN.m; where not indicated, the value given by the following formula may be assumed for M_T:

$$M_T = 9,55 \cdot \left(\frac{P}{N}\right)$$

P : Maximum continuous power of propulsion machinery, in kW

N : Rotational speed of the propeller, in rev/min

δ : Density of blade material, in kg/dm^3, as indicated in Tab 3

B : Developed area ratio

h : Rake, in mm

l : Expanded width of blade section at 0,25 radius from propeller axis, in mm

z : Number of blades

R_m : Minimum tensile strength of blade material, in N/mm^2.

b) The maximum thickness $t_{0,6}$, in mm, of the solid propeller blade at the section at 0,6 radius from the propeller axis is not to be less than that obtained from the following formula:

$$t_{0,6} = 1,9\left[f\,\frac{1,5.10^6.\rho_{0,6}.M_T + 18,4.\delta.\left(\frac{D}{100}\right)^3.B.l.N^2.h}{l_{0,6}\cdot z\cdot R_m}\right]^{0,5}$$

where:

$\rho_{0,6} = D / H_{0,6}$

$H_{0,6}$: Pitch at 0,6 radius from the propeller axis, in m

$l_{0,6}$: Expanded width of blade section at 0,6 radius from propeller axis, in mm.

c) The radius at the blade root is to be at least 3/4 of the minimum thickness required in that position. As an alternative, constant stress fillets may also be considered. When measuring the thickness of the blade, the increased thickness due to the radius of the fillet at the root of the blade is not to be taken into account. If the propeller hub extends over 0,25 radius, the thickness calculated by the formula in a) is to be compared with the thickness obtained by linear interpolation of the actual blade thickness up to 0,25 radius.

d) As an alternative to the above formulae, a detailed hydrodynamic load and stress analysis carried out by the propeller designer may be considered by the Society, on a case by case basis. The safety factor to be used in this analysis is not to be less than 8 with respect to the ultimate tensile strength of the propeller material R_m.

2.3 Built-up propellers and controllable pitch propellers

2.3.1 Blade thickness

a) The maximum thickness $t_{0,35}$, in mm, of the blade at the section at 0,35 radius from the propeller axis is not to be less than that obtained from the following formula:

$$t_{0,35} = 2,7\left[f\,\frac{1,5.10^6.\rho_{0,7}.M_T + 41.\delta\left(\frac{D}{100}\right)^3 B.l_{0,35}.N^2 h}{l_{0,35}\cdot z\cdot R_m}\right]^{0,5}$$

where:

$\rho_{0,7} = D / H_{0,7}$

$H_{0,7}$: Pitch at 0,7 radius from the propeller axis, in m. The pitch to be used in the formula is the actual pitch of the propeller when the propeller develops the maximum thrust

$l_{0,35}$: Expanded width of blade section at 0,35 radius from propeller axis, in mm.

b) The maximum thickness $t_{0,6}$, in mm, of the solid propeller blade at the section at 0,6 radius from the propeller axis is not to be less than that obtained from the formula in [2.2.1] b), using the value of $l_{0,35}$ in lieu of l.

c) The radius at the blade root is to be at least 3/4 of the minimum thickness required in that position. As an alternative, constant stress fillets may also be considered. When measuring the thickness of the blade, the increased thickness due to the radius of the fillet at the root of the blade is not to be taken into account.

d) As an alternative to the above formulae, a detailed hydrodynamic load and stress analysis carried out by the propeller designer may be considered by the Society, on a case by case basis. The safety factor to be used in this analysis is not to be less than 8 with respect to the ultimate tensile strength of the propeller blade material R_m.

2.3.2 Flanges for connection of blades to hubs

a) The diameter D_F, in mm, of the flange for connection to the propeller hub is not to be less than that obtained from the following formula:

$D_F = D_C + 1,8\ d_{PR}$

where:

D_C : Stud pitch circle diameter, in mm

d_{PR} : Diameter of studs.

b) The thickness of the flange is not to be less than 1/10 of the diameter D_F.

2.3.3 Connecting studs

a) The diameter d_{PR}, in mm, at the bottom of the thread of the studs is not to be less than obtained from the following formula:

$$d_{PR} = \left(\frac{4,6.10^7.\rho_{0,7}.M_T + 0,88.\delta.\left(\frac{D}{10}\right)^3.B.l_{0,35}.N^2.h_1}{n_{PR}\cdot z\cdot D_C\cdot R_{m,PR}}\right)^{0,5}$$

where:

h_1 : $h_1 = h + 1,125\ D_C$

n_{PR} : Total number of studs in each blade

$R_{m,PR}$: Minimum tensile strength of stud material, in N/mm^2.

b) The studs are to be tightened in a controlled manner such that the tension on the studs is approximately 60-70% of their yield strength.

c) The shank of studs may be designed with a minimum diameter equal to 0,9 times the root diameter of the thread.

d) The studs are to be properly secured against unintentional loosening.

2.4 Skewed propellers

2.4.1 Skewed propellers

The thickness of skewed propeller blades may be obtained by the formulae in [2.2] and [2.3.1], as applicable, provided the skew angle is less than 25°.

2.4.2 Highly skewed propellers

a) For solid and controllable pitch propellers having skew angles between 25° and 50°, the blade thickness, in mm, is not to be less than that obtained from the following formulae:

1) for solid propellers:

$$t_{S-0,25} = t_{0,25} \cdot (0,92 + 0,0032\vartheta)$$

2) for built-up and controllable pitch propellers:

$$t_{S-0,35} = t_{0,35} \cdot (0,9 + 0,004\vartheta)$$

3) for all propellers:

$$t_{S-0,6} = t_{0,6} \cdot (0,74 + 0,0129\vartheta - 0,0001\vartheta^2)$$

$$t_{S-0,9} = t_{0,6} \cdot (0,35 + 0,0015\vartheta)$$

where:

$t_{S-0,25}$: Maximum thickness, in mm, of skewed propeller blade at the section at 0,25 radius from the propeller axis

$t_{0,25}$: Maximum thickness, in mm, of normal shape propeller blade at the section at 0,25 radius from the propeller axis, obtained by the formula in [2.2.1]

$t_{S-0,35}$: Maximum thickness, in mm, of skewed propeller blade at the section at 0,35 radius from the propeller axis

$t_{0,35}$: Maximum thickness, in mm, of normal shape propeller blade at the section at 0,35 radius from the propeller axis, obtained by the formula in [2.3.1]

$t_{S-0,6}$: Maximum thickness, in mm, of skewed propeller blade at the section at 0,6 radius from the propeller axis

$t_{0,6}$: Maximum thickness, in mm, of normal shape propeller blade at the section at 0,6 radius from the propeller axis, obtained by the formula in [2.2.1]

$t_{S-0,9}$: Maximum thickness, in mm, of skewed propeller blade at the section at 0,9 radius from the propeller axis

ϑ : Skew angle.

b) As an alternative, highly skewed propellers may be accepted on the basis of a stress analysis, as stated in [2.4.3] for very highly skewed propellers.

2.4.3 Very highly skewed propellers

For very highly skewed propellers, the blade thickness is to be obtained by the Manufacturer, using a stress analysis according to a calculation criteria accepted by the Society. The safety factor to be used in this direct analysis is not to be less than 9 with respect to the ultimate tensile strength of the propeller blade material, R_m.

2.5 Ducted propellers

2.5.1 The minimum blade thickness of propellers with wide tip blades running in nozzles is not to be less than the values obtained by the applicable formula in [2.2] or [2.3.1], increased by 10%.

2.6 Features

2.6.1 Blades and hubs

a) All parts of propellers are to be free of defects and are to be built and installed with clearances and tolerances in accordance with sound marine practice.

b) Particular care is to be taken with the surface finish of the blades.

2.6.2 Controllable pitch propellers pitch control system

a) Where the pitch control mechanism is operated hydraulically, two independent, power-driven pump sets are to be fitted. For propulsion plants up to 220 kW, one power-driven pump set is sufficient provided that, in addition, a hand-operated pump is fitted for controlling the blade pitch.

b) Pitch control systems are to be provided with an engine room indicator showing the actual setting of the blades. Further blade position indicators are to be mounted on the bridge and in the engine control room, if any.

c) Suitable devices are to be fitted to ensure that an alteration of the blade setting cannot overload the propulsion plant or cause it to stall.

d) Steps are to be taken to ensure that, in the event of failure of the control system, the setting of the blades:

- does not change, or
- assumes a final position slowly enough to allow the emergency control system to be put into operation.

e) Controllable pitch propeller systems are to be equipped with means of emergency control enabling the controllable pitch propeller to operate should the remote control system fail. This requirement may be complied with by means of a device which locks the propeller blades in the “ahead” setting.

3 Arrangement and installation

3.1 Fitting of propeller on the propeller shaft

3.1.1 General

a) Screw propeller hubs are to be properly adjusted and fitted on the propeller shaft cone.

b) The forward end of the hole in the hub is to have the edge rounded to a radius of approximately 6 mm.

c) In order to prevent any entry of river water under the liner and onto the end of the propeller shaft, the arrangement of Fig 2 is generally to be adopted for assembling the liner and propeller boss.

Figure 2 : Example of sealing arrangement

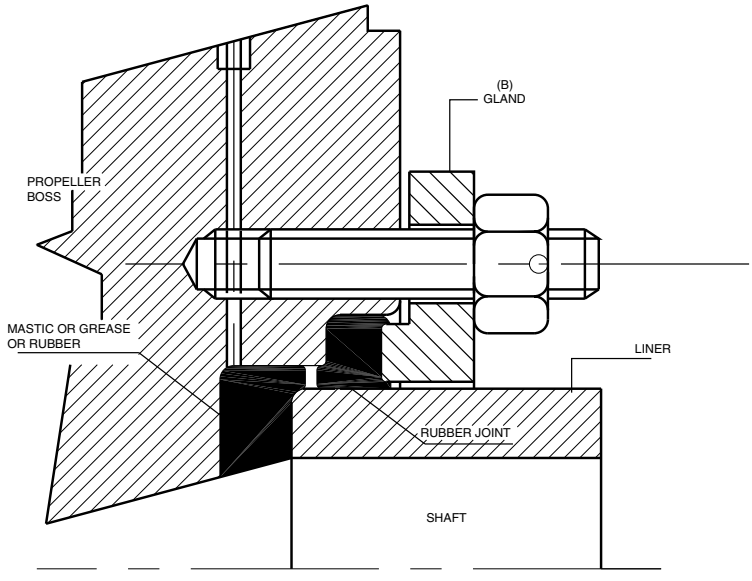

d) The external stuffing gland is to be provided with a sea-water resistant rubber ring preferably without joints. The clearance between the liner and the internal air space of the boss is to be as small as possible. The internal air space is to be filled with an appropriate protective material which is insoluble in sea water and non-corrodible or fitted with a rubber ring.

e) All free spaces between the propeller shaft cone, propeller boss, nut and propeller cap are to be filled with a material which is insoluble in sea water and non-corrodible. Arrangements are to be made to allow any air present in these spaces to withdraw at the moment of filling. It is recommended that these spaces be tested under a pressure at least equal to that corresponding to the immersion of the propeller in order to check the tightness obtained after filling.

f) For propeller keys and key area, see Ch 1, Sec 7, [2.5.5].

3.1.2 Shrinkage of keyless propellers

The meaning of the symbols used in the present requirement is as follows:

A : 100% theoretical contact area between propeller boss and shaft, as read from plans and disregarding oil grooves, in mm^2

d_{PM} : Diameter of propeller shaft at the mid-point of the taper in the axial direction, in mm

d_H : Mean outer diameter of propeller hub at the axial position corresponding to d_{PM}, in mm

$K = d_H / d_{PM}$

F : Tangential force at interface, in N

M_T : Continuous torque transmitted, in N.m; where not indicated, M_T may be assumed as indicated in [2.2.1]

C : Coefficient equal to:

- 1,0 for turbines, geared diesel engines, electrical drives and direct-drive reciprocating internal combustion engines with a hydraulic, electromagnetic or high elasticity coupling
- 1,2 for diesel engines having couplings other than those specified above

The Society reserves the right to increase the value of C if the shrinkage needs to absorb an extremely high pulsating torque

T : Temperature of hub and propeller shaft material, in °C, assumed for calculation of pull-up length and push-up load

V : Vessel speed at P power, in km/h

S : Continuous thrust developed for free running vessel, in N

s_F : Safety factor against friction slip at 35°C

θ : Half taper of propeller shaft (for instance: for taper = 1/15, θ = 1/30)

μ : Coefficient of friction between mating surfaces

p_{35} : Surface pressure between mating surfaces, in N/mm^2, at 35°C

p_T : Surface pressure, in N/mm^2, between mating surfaces at temperature T

p_0 : Surface pressure between mating surfaces, in N/mm^2, at 0°C

p_{MAX} : Maximum permissible surface pressure, in N/mm^2, at 0°C

d_{35} : Push-up length, in mm, at 35°C

d_T : Push-up length, in mm, at temperature T

d_{MAX} : Maximum permissible pull-up length, in mm, at 0°C

W_T : Push-up load, in N, at temperature T

σ_{ID} : Equivalent uni-axial stress in the boss according to the von Mises-Hencky criterion, in N/mm^2

α_P : Coefficient of linear expansion of shaft material, in mm/(mm°C)

α_M : Coefficient of linear expansion of boss material, in mm/(mm°C)

E_P : Value of the modulus of elasticity of shaft material, in N/ mm^2

E_M : Value of the modulus of elasticity of boss material, in N/ mm^2

ν_P : Poisson's ratio for shaft material

ν_M : Poisson's ratio for boss material

$R_{S,MIN}$: Value of the minimum yield strength (R_{eH}), or 0,2% proof stress ($R_{p\,0,2}$), of propeller boss material, in N/mm^2.

For other symbols not defined above, see [2.2].

In the case of keyless shrinking of propellers, the following requirements apply:

a) The manufacturer is to submit together with the required constructional plans specifications containing all elements necessary for verifying the shrinkage. Tests and checks deemed necessary for verifying the characteristics and integrity of the propeller material are also to be specified.

b) Moreover, the manufacturer is to submit an instruction handbook, in which all operations and any precautions necessary for assembling and disassembling the propeller, as well as the values of all relevant parameters, are to be specified. A copy, endorsed by the Society, is to be kept on board each vessel where the propeller is installed.

c) The formulae and other provisions below do not apply to propellers where a sleeve is introduced between shaft and boss or in the case of hollow propeller shafts. In such cases, a direct shrinkage calculation is to be submitted to the Society.

d) The taper of the propeller shaft cone is not to exceed 1/15.

e) Prior to final pull-up, the contact area between the mating surfaces is to be checked and is not to be less than 70% of the theoretical contact area (100%). Non-contact bands extending circumferentially around the boss or over the full length of the boss are not acceptable.

f) After final push-up, the propeller is to be secured by a nut on the propeller shaft. The nut is to be secured to the shaft.

g) The safety factor s_F against friction slip at 35°C is not to be less than 2,8, under the combined action of torque and propeller thrust, based on the maximum continuous power P for which classification is requested at the corresponding speed of rotation N of the propeller, plus pulsating torque due to torsionals.

h) For the oil injection method, the coefficient of friction μ is to be 0,13 in the case of bosses made of bronze, brass or steel. For other methods, the coefficient of friction will be considered in each case by the Society.

i) The maximum equivalent uni-axial stress in the boss at 0°C, based on the von Mises-Hencky criterion, is not to exceed 70% of the minimum yield strength (R_{eH}), or 0,2% proof stress ($R_{p0,2}$), of the propeller material, based on the test piece value. For cast iron, the value of the above stress is not to exceed 30% of the nominal tensile strength.

j) For the formulae given below, the material properties indicated in the following items are to be assumed:

- Modulus of elasticity, in N/mm^2:

  Cast and forged steel: E = 206000

  Cast iron: E = 98000

  Type Cu1 and Cu2 brass: E = 108000

  Type Cu3 and Cu4 brass: E = 118000

- Poisson's ratio:

  Cast and forged steel: $\nu = 0,29$

  All copper based alloys: $\nu = 0,33$

- Coefficient of linear expansion in mm/(mm°C)

  Cast and forged steel and cast iron: $\alpha = 12,0 \cdot 10^{-6}$

  All copper based alloys: $\alpha = 17,5 \cdot 10^{-6}$

k) For shrinkage calculation the formulae in the following items, which are valid for the ahead condition, are to be applied. They will also provide a sufficient margin of safety in the astern condition.

- Minimum required surface pressure at 35°C:

$$p_{35} = \frac{s_F S}{AB} \cdot \left[- s_F \theta + \left(\mu^2 + B \cdot \frac{F^2}{S^2} \right)^{0,5} \right]$$

  where:

  $B = \mu^2 - s_F^2 \, \theta^2$

- Corresponding minimum pull-up length at 35°C:

$$d_{35} = \frac{p_{35} d_{PM}}{2\theta} \cdot \left[\frac{1}{E_M} \cdot \left(\frac{K^2 + 1}{K^2 - 1} + \nu_M \right) + \frac{1 - \nu_P}{E_P} \right]$$

- Minimum pull-up length at temperature T (T<35°C):

$$d_T = d_{35} + \frac{d_{PM}}{2\theta} \cdot (\alpha_M - \alpha_P) \cdot (35 - T)$$

- Corresponding minimum surface pressure at temperature T:

$$p_T = p_{35} \cdot \frac{d_T}{d_{35}}$$

- Minimum push-up load at temperature T:

$$W_T = Ap_T \cdot (\mu + \theta)$$

- Maximum permissible surface pressure at 0°C:

$$p_{MAX} = \frac{0{,}7R_{S,MIN} \cdot (K^2 - 1)}{(3K^4 + 1)^{0,5}}$$

- Corresponding maximum permissible pull-up length at 0°C:

$$d_{MAX} = d_{35} \cdot \frac{p_{MAX}}{p_{35}}$$

- Tangential force at interface:

$$F = \frac{2000CM_T}{d_{PM}}$$

- Continuous thrust developed for free running vessel; if the actual value is not given, the value, in N, calculated by one of the following formulae may be considered:

$$S = 950 \cdot \frac{P}{V}$$

$$S = 57,3 \cdot 10^3 \cdot \frac{P}{H \cdot N}$$

4 Testing and certification

4.1 Material tests

4.1.1 Solid propellers

Material used for the construction of solid propellers is to be tested in accordance with the requirements of NR216 Materials and Welding in the presence of the Surveyor.

4.1.2 Built-up propellers and controllable pitch propellers

In addition to the requirement in [4.1.1], materials for studs and for all other parts of the mechanism transmitting torque are to be tested in the presence of the Surveyor.

4.2 Testing and inspection

4.2.1 Controllable pitch propellers

The complete hydraulic system for the control of the controllable pitch propeller mechanism is to be hydrotested at a pressure equal to 1,5 times the design pressure. The proper operation of the safety valve is to be tested in the presence of the Surveyor.

4.2.2 Balancing

Finished propellers are to be statically balanced in accordance with the specified ISO 484 tolerance class. However, for built-up and controllable pitch propellers, the required static balancing of the complete propeller may be replaced by an individual check of blade weight and gravity centre position.

Refer also to NR216 Materials and welding, Ch 3, Sec 1, [3.8.4.].

4.3 Certification

4.3.1 Certification of propellers

Propellers having the characteristics indicated in [1.1.1] are to be individually tested and certified by the Society.

4.3.2 Mass produced propellers

Mass produced propellers may be accepted within the framework of the type approval program of the Society.

SECTION 9 SHAFT VIBRATIONS

1 General

1.1 Application

1.1.1 The requirements of this Section apply to the shafting of the following installations:

- propulsion systems with prime movers developing 220 kW or more
- other systems with internal combustion engines developing 110 kW or more and driving auxiliary machinery intended for essential services.

1.1.2 Exemptions

The requirements of this Section may be waived in cases where satisfactory service operation of similar installations is demonstrated.

2 Design of systems in respect of vibrations

2.1 Principle

2.1.1 General

a) Special consideration shall be given by Manufacturers to the design, construction and installation of propulsion machinery systems so that any mode of their vibrations shall not cause undue stresses in these systems in the normal operating ranges.

b) Calculations are to be carried out for the configurations of the system likely to have influence on the torsional vibrations.

c) Where deemed necessary by the Manufacturer, axial and/or bending vibrations are to be investigated.

2.1.2 Vibration levels

Systems are to have torsional, bending and axial vibrations both in continuous and in transient running acceptable to the Manufacturers, and in accordance with the requirements of this Section.

Where vibrations are found to exceed the limits stated in this Section, the builder of the plant is to propose corrective actions, such as:

- operating restrictions, provided that the owner is informed, or
- modification of the plant.

2.1.3 Condition of components

Systems are to be designed considering the following conditions, as deemed necessary by the Manufacturer:

- engine: cylinder malfunction
- flexible coupling: possible variation of the stiffness or damping characteristics due to heating or ageing
- vibration damper: possible variation of the damping coefficient.

2.2 Modifications of existing plants

2.2.1 Where substantial modifications of existing plants, such as:

- change of the running speed or power of the engine
- replacement of an important component of the system (propeller, flexible coupling, damper) by one of different characteristics, or
- connection of a new component,

are carried out, new vibration analysis is to be submitted for approval.

3 Torsional vibrations

3.1 Documentation to be submitted

3.1.1 Calculations

Torsional vibration calculations are to be submitted for the various configurations of the plants, showing:

- the equivalent dynamic system used for the modelling of the plant, with the indication of:
  - inertia and stiffness values for all the components of the system
  - outer and inner diameters and material properties of the shafts
- the natural frequencies
- the values of the vibratory torques or stresses in the components of the system for the most significant critical speeds and their analysis in respect of the Rules and other acceptance criteria
- the possible restrictions of operation of the plant.

3.1.2 Particulars to be submitted

The following particulars are to be submitted with the torsional vibration calculations:

a) for turbines, multi-engine installations or installations with power take-off systems:
   - description of the operating configurations
   - load sharing law between the various components for each configuration

b) for installations with controllable pitch propellers: the power/rotational speed values resulting from the combinator operation

c) for prime movers: the service speed range and the minimum speed at no load

d) for internal combustion engines:
   - manufacturer and type
   - nominal output and rotational speed
   - mean indicated pressure
   - number of cylinders
   - "V" angle
   - firing angles
   - bore and stroke
   - excitation data, such as the polynomial law of harmonic components of excitations
   - nominal alternating torsional stress considered for crankpin and journal

Note 1: The nominal alternating torsional stress is part of the basic data to be considered for the assessment of the crankshaft. It is defined in NR467, Part C, Chapter 1.

e) for turbines:
   - nominal output and rotational speed
   - power/speed curve and range of operation
   - number of stages, and load sharing between the stages
   - main excitation orders for each rotating disc
   - structural damping of shafts
   - external damping on discs (due to the fluid)

f) for reduction or step-up gears: the speed ratio for each step

g) for flexible couplings:
   - the maximum torque
   - the nominal torque
   - the permissible vibratory torque
   - the permissible heat dissipation
   - the relative damping
   - the torsional dynamic stiffness / transmitted torque relation where relevant

h) for torsional vibration dampers:
   - the manufacturer and type
   - the permissible heat dissipation
   - the damping coefficient
   - the inertial and stiffness properties, as applicable

i) for propellers:
   - the type of propeller: ducted or not ducted
   - the number of propellers of the vessel
   - the number of blades
   - the excitation and damping data, if available

j) for electric motors, generators and pumps: the drawing of the rotating parts, with their mass moment of inertia and main dimensions.

3.2 Definitions, symbols and units

3.2.1 Definitions

a) Torsional vibration stresses referred to in this Article are the stresses resulting from the alternating torque corresponding to the synthesis of the harmonic orders concerned.

b) The misfiring condition of an engine is the malfunction of one cylinder due to the absence of fuel injection (which results in a pure compression or expansion in the cylinder).

3.2.2 Symbols, units

The main symbols used in this Article are as follows:

τ : Torsional vibration stress, as defined in [3.2.1], in N/mm^2

τ_1 : Permissible stress due to torsional vibrations for continuous operation, in N/mm^2

τ_2 : Permissible stress due to torsional vibrations for transient running, in N/mm^2

R_m : Tensile strength of the shaft material, in N/mm^2

C_R : Material factor, equal to:

$$\frac{R_m + 160}{18}$$

d : Minimum diameter of the shaft, in mm

C_D : Size factor of the shaft, equal to:

$0,35 + 0,93\ d^{-0,2}$

N : Speed of the shaft for which the check is carried out, in rev/min

N_n : Nominal speed of the shaft, in rev/min

N_C : Critical speed, in rev/min

λ : Speed ratio, equal to N/N_n

C_λ : Speed ratio factor, equal to:
   - $3 - 2\ \lambda^2$ for $\lambda < 0,9$
   - $1,38$ for $0,9 \leq \lambda < 1,05$

C_k : Factor depending on the stress concentration factor of the shaft design features given in Tab 1.

Table 1 : Values of C_k factor

Intermediate shafts with							Thrust shafts external to engines		Propeller shafts		
straight sections and integral coupling flanges	shrink-fit couplings **(1)**	keyways, tapered connection **(2)**	keyways, cylindrical connection **(2)**	radial hole	longitudinal slot **(3)**	splined shafts	on both sides of thrust collar	in way of axial bearing where a roller bearing is used as a thrust bearing	flange mounted or keyless fitted propellers **(4)**	key fitted propellers **(4)**	between forward end of aft most bearing and forward stern tube seal
1,00	1,00	0,60	0.45	0.50	0.30	0,80	0,85	0,85	0,55	0,55	0.80

(1) C_k values refer to the plain shaft section only. Where shafts may experience vibratory stresses close to the permissible stresses for continuous operation, an increase in diameter to the shrink fit diameter is to be provided, e.g. a diameter increase of 1 to 2% and a blending radius as described in Ch 1, Sec 7, [2.5.1].

(2) Keyways are to be in accordance with the provisions of Ch 1, Sec 7, [2.5.5].

(3) Subject to limitations as $\ell/d_o < 0,8$ and $d_i/d_o < 0,8$ and $e/d_o > 0,10$, where:

ℓ : Slot length, in mm

e : Slot width, in mm

d_i, d_o : As per Ch 1, Sec 7, [2.2.3].

The C_k value is valid for 1, 2 and 3 slots, i.e. with slots at, respectively, 360 degrees 180 degrees and 120 degrees apart.

(4) Applicable to the portion of the propeller shaft between the forward edge of the aftermost shaft bearing and the forward face of the propeller hub (or shaft flange), but not less than 2,5 times the required diameter.

Note 1: Higher values of C_k factor based on direct calculations may also be considered.

Note 2: The determination of C_k factor for shafts other than those given in this Table will be given special consideration by the Society.

3.3 Calculation principles

3.3.1 Method

a) Torsional vibration calculations are to be carried out using a recognised method.

b) Where the calculation method does not include harmonic synthesis, attention is to be paid to the possible superimposition of two or more harmonic orders of different vibration modes which may be present in some restricted ranges.

3.3.2 Scope of the calculations

a) Torsional vibration calculations are to be carried out considering:

- normal firing of all cylinders, and
- misfiring of one cylinder.

b) Where the torsional dynamic stiffness of the coupling depends on the transmitted torque, two calculations are to be carried out:

- one at full load, and
- one at the minimum load expected in service.

c) For installations with controllable pitch propellers, two calculations are to be carried out:

- one for full pitch condition, and
- one for zero pitch condition.

d) The calculations are to take into account other possible sources of excitation, as deemed necessary by the Manufacturer. Electrical sources of excitations, such as static frequency converters, are to be detailed. The same applies to transient conditions such as engine start up, reversing, clutching in, as necessary.

e) The natural frequencies are to be considered up to a value corresponding to 15 times the maximum service speed. Therefore, the excitations are to include harmonic orders up to the fifteenth.

3.3.3 Criteria for acceptance of the torsional vibration loads under normal firing conditions

a) Torsional vibration stresses in the various shafts are not to exceed the limits defined in [3.4]. Higher limits calculated by an alternative method may be considered, subject to special examination by the Society.

The limit for continuous running τ_1 may be exceeded only in the case of transient running in restricted speed ranges, which are defined in [3.4.5]. In no case are the torsional vibration stresses to exceed the limit for transient running τ^2.

Propulsion systems are to be capable of running continuously without restrictions at least within the speed range between 0,8 N_n and 1,05 N_n. Transient running may be considered only in restricted speed ranges for speed ratios $\lambda \leq 0,8$.

Auxiliary machinery is to be capable of running continuously without restrictions at least within the range between 0,95 N_n and 1,10 N_n. Transient running may be considered only in restricted speed ranges for speed ratios $\lambda \leq 0,95$.

b) Torsional vibration levels in other components are to comply with the provisions of [3.5].

c) The generating set is to show torsional vibration levels which are compatible with the allowable limits for the alternator, shafts, coupling and damper.

3.3.4 Criteria for acceptance of torsional vibration loads under misfiring conditions

a) The provisions of [3.3.3] related to normal firing conditions also apply to misfiring conditions.

Note 1: For propulsion systems operated at constant speed, restricted speed ranges related to misfiring conditions may be accepted for speed ratios $\lambda > 0,8$.

b) Where calculations show that the limits imposed for certain components may be exceeded under misfiring conditions, a suitable device is to be fitted to indicate the occurrence of such conditions.

3.4 Permissible limits for torsional vibration stresses in crankshaft, propulsion shafting and other transmission shafting

3.4.1 General

a) The limits provided below apply to steel shafts. For shafts made of other material, the permissible limits for torsional vibration stresses will be determined by the Society after examination of the results of fatigue tests carried out on the material concerned.

b) These limits apply to the torsional vibration stresses as defined in [3.2.1]. They relate to the shaft minimum section, without taking account of the possible stress concentrations.

3.4.2 Crankshaft

a) Where the crankshaft has been designed in accordance with NR467, Part C, Chapter 1, the torsional vibration stresses in any point of the crankshaft are not to exceed the following limits:

- for continuous running: $\tau_1 = \tau_N$
- for transient running: $\tau_2 = 1,7\ \tau_N$,

where τ_N is the nominal alternating torsional stress on which the crankshaft scantling is based (see Note 1 of [3.1.2]).

b) Where the crankshaft has not been designed in accordance with NR467, Part C, Chapter 1, the torsional vibration stresses in any point of the crankshaft are not to exceed the following limits:

- for continuous running: $\tau_1 = 0,55\ C_R\ C_D\ C_\lambda$
- for transient running: $\tau_2 = 2,3\ \tau_1$

3.4.3 Intermediate shafts, thrust shafts and propeller shafts

The torsional vibration stresses in any intermediate, thrust and propeller shafts are not to exceed the following limits:

- for continuous running: $\tau_1 = C_R\ C_k\ C_D\ C_\lambda$
- for transient running: $\tau_2 = 1,7\ \tau_1\ C_k^{-0,5}$

3.4.4 Transmission shafting for generating sets and other auxiliary machinery

The torsional vibration stresses in the transmission shafting for generating sets and other auxiliary machinery, such as pumps or compressors, are not to exceed the following limits:

- for continuous running: $\tau_1 = 0,90\ C_R\ C_D$
- for transient running: $\tau_2 = 5,4\ \tau_1$

3.4.5 Restricted speed ranges

a) Where the torsional vibration stresses exceed the limit τ_1 for continuous running, restricted speed ranges are to be imposed which are to be passed through rapidly.

b) The limits of the restricted speed range related to a critical speed Nc are to be calculated in accordance with the following formula:

$$\frac{16 \cdot N_c}{18 - \lambda} \leq N \leq \frac{(18 - \lambda) \cdot N_c}{16}$$

c) Where the resonance curve of a critical speed is obtained from torsional vibration measurements, the restricted speed range may be established considering the speeds for which the stress limit for continuous running τ_1 is exceeded.

d) Where restricted speed ranges are imposed, they are to be crossed out on the tachometers and an instruction plate is to be fitted at the control stations indicating that:

- the continuous operation of the engine within the considered speed range is not permitted
- this speed range is to be passed through rapidly.

e) When restricted speed ranges are imposed, the accuracy of the tachometers is to be checked in such ranges as well as in their vicinity.

f) Restricted speed ranges in one-cylinder misfiring conditions of single propulsion engine vessels are to enable safe navigation.

3.5 Permissible vibration levels in components other than shafts

3.5.1 Gears

a) The torsional vibration torque in any gear step is not to exceed 30% of the torque corresponding to the approved rating throughout the service speed range.

Where the torque transmitted at nominal speed is less than that corresponding to the approved rating, higher torsional vibration torques may be accepted, subject to special consideration by the Society.

b) Gear hammering induced by torsional vibration torque reversal is not permitted throughout the service speed range, except during transient running at speed ratios $\lambda \leq 0,3$.

Where calculations show the existence of torsional vibration torque reversals for speed ratios $\lambda > 0,3$, the corresponding speed ranges are to be identified by appropriate investigations during river trials and considered as restricted speed ranges in accordance with [3.4.5].

3.5.2 Generators

a) In the case of alternating current generators, the torsional vibration amplitude at the rotor is not to exceed ± 2,5 electrical degrees at service rotational speed under full load working conditions.

b) Vibratory inertia torques due to torsional vibrations and imposed on the rotating parts of the generator are not to exceed the values M_A, in N.m, calculated by the following formulae, as appropriate:

- for $0,95 \leq \lambda \leq 1,10$: $M_A = \pm 2,5\ M_T$
- for $\lambda \leq 0,95$: $M_A = \pm 6,0\ M_T$

where:

M_T : Mean torque transmitted by the engine under full load running conditions, in N.m

Note 1: In the case of two or more generators driven by the same engine, the portion of M_T transmitted to each generator is to be considered.

λ : Speed ratio defined in [3.2.2].

3.5.3 Flexible couplings

a) Flexible couplings are to be capable of withstanding the mean transmitted torque and the torsional vibration torque throughout the service speed range, without exceeding the limits for continuous operation imposed by the manufacturer (permissible vibratory torque and power loss).

Where such limits are exceeded under misfiring conditions, appropriate restrictions of power or speed are to be established.

b) The coupling selection for the generating set is to take into account the stresses and torques imposed on it by the torsional vibration of the system.

3.5.4 Dampers

a) Torsional vibration dampers are to be such that the permissible power loss recommended by the manufacturer is not exceeded throughout the service speed range.

b) Dampers for which a failure may lead to a significant vibration overload of the installation will be the subject of special consideration.

3.6 Torsional vibration measurements

3.6.1 General

a) The Society may require torsional vibration measurements to be carried out under its attendance in the following cases:

- where the calculations indicate the possibility of dangerous critical speeds in the operating speed range
- where doubts arise as to the actual stress amplitudes or critical speed location, or
- where restricted speed ranges need to be verified.

b) Where measurements are required, a comprehensive report including the analysis of the results is to be submitted to the Society.

3.6.2 Method of measurement

When measurements are required, the method of measurement is to be submitted to the Society for approval. The type of measuring equipment and the location of the measurement points are to be specified.

SECTION 10 PIPING SYSTEMS

1 General

1.1 Scope and application

1.1.1 These Rules apply to piping systems, including valves, fittings and pumps, which are necessary for the operation of the main propulsion plant together with its auxiliaries and equipment. They also apply to piping systems used in the operation of the vessel whose failure could directly or indirectly impair the safety of vessel or cargo, and to piping systems which are dealt with in other Sections of the Rules.

Cargo pipelines on vessels for the carriage of chemicals in bulk are additionally subject to the provisions of Pt D, Ch 3, Sec 3 to Pt D, Ch 3, Sec 6.

Cargo pipelines on vessels for the carriage of liquefied gases in bulk are additionally subject to the provisions of Pt D, Ch 3, Sec 2.

1.1.2

a) General requirements applying to all piping systems are contained in Articles:
   - [2] for their design and construction
   - [3] for the welding of steel pipes
   - [4] for the bending of pipes
   - [5] for their arrangement and installation
   - [20] for their certification, inspection and testing.

b) Specific requirements for vessel piping systems and machinery piping systems are given in Articles [6] to [19].

1.2 Documentation to be submitted

1.2.1 The documents listed in Tab 1 as well as the additional documents listed in Tab 2 are also to be submitted.

1.3 Definitions

1.3.1 Piping and piping systems

a) Piping includes pipes and their connections, flexible hoses and expansion joints, valves and their actuating systems, other accessories (filters, level gauges, etc.) and pump casings.

b) Piping systems include piping and all the interfacing equipment such as tanks, pressure vessels, heat exchangers, pumps and centrifugal purifiers, but do not include boilers, turbines, internal combustion engines and reduction gears.

Note 1: The equipment other than piping is to be designed in accordance with the relevant Sections of Part C, Chapter 1.

1.3.2 Pressures

a) Maximum allowable working pressure, PB, in bar (formula symbol: $p_{e,zul}$)

   This is the maximum allowable internal or external working pressure for a component or piping system with regard to the materials used, piping design requirements, the working temperature and undisturbed operation.

b) Nominal pressure, PN, in bar

   This is the term applied to a selected pressure temperature relation used for the standardization of structural components. In general, the numerical value of the nominal pressure for a standardized component made of the material specified in the standard will correspond to the maximum allowable working pressure PB at 20°C.

c) Test pressure, PP, in bar (formula symbol: p_p)

   This is the pressure to which components or piping systems are subjected for testing purposes.

d) Design pressure, PR, in bar (formula symbol: p_C)

   This is the maximum allowable working pressure PB for which a component or piping system is designed with regard to its mechanical characteristics. In general, the design pressure is the maximum allowable working pressure at which the safety equipment will interfere (e.g. activation of safety valves, opening of return lines of pumps, operating of overpressure safety arrangements, opening of relief valves) or at which the pumps will operate against closed valves.

1.3.3 Design temperature

The design temperature, T in °C, of a piping system is the maximum temperature of the medium inside the system.

1.3.4 Flammable oils

Flammable oils include fuel oils, lubricating oils, thermal oils and hydraulic oils.

1.4 Class of piping systems

1.4.1 Piping systems are subdivided into two classes, denoted as class II and class III, for the purpose of acceptance of materials, selection of joints, heat treatment, welding, pressure testing and the certification of fittings. These classes are defined in Tab 3.

Table 1 : Documents to be submitted

Item No	I/A **(1)**	Document **(2)**
1	A	Drawing showing the arrangement of the river chests and vessel side valves
2	A	Diagram of the bilge and ballast systems (in and outside machinery spaces), including calculation for the bilge main, bilge branch lines and bilge pumps capacity as per Rule requirements
3	A	Specification of the central priming system intended for bilge pumps, when provided
4	A	Diagram of the drinking water, scuppers and sanitary discharge systems
5	A	Diagram of the air, sounding and overflow systems
6	A	Diagram of cooling systems (river water and fresh water)
7	A	Diagram of fuel oil system
8	A	Drawings of the fuel oil tanks not forming part of the vessel's structure
9	A	Diagram of the lubricating oil system
10	A	Diagram of the thermal oil system
11	A	Diagram of the hydraulic systems intended for essential services or located in machinery spaces
12	A	Diagram of steam system, including safety valve exhaust and drain pipes
13	A I	For high temperature steam pipes: • stress calculation note • drawing showing the actual arrangement of the piping in three dimensions
14	A	Diagram of the boiler feed water and condensate system
15	A	Diagram of the compressed air system
16	A	Diagram of the hydraulic and pneumatic remote control systems
17	A	Diagram of the remote level gauging system
18	A	Diagram of the exhaust gas system
19	A	Diagram of drip trays and gutterway draining system
20	A	Arrangement of the ventilation system
21	A	Drawings and specification of valves and accessories

(1) A = to be submitted for review
I = to be submitted for information.

(2) Diagrams are also to include, where applicable, the (local and remote) control and monitoring systems and automation systems.

Table 2 : Information to be submitted

Item No	I/A **(1)**	Document
1	I	Nature, service temperature and pressure of the fluids
2	A	Material, external diameter and wall thickness of the pipes
3	A	Type of the connections between pipe lengths, including details of the weldings, where provided
4	A	Material, type and size of the accessories
5	A	Capacity, prime mover and, when requested, location of the pumps
6	A	Constructional drawings of independent tanks showing the height of the overflow and air pipe above the tank top
7	A	For plastic pipes: • the chemical composition • the physical and mechanical characteristics in function of temperature • the characteristics of inflammability and fire resistance • the resistance to the products intended to be conveyed

(1) A = to be submitted for review
I = to be submitted for information.

Table 3 : Class of piping systems

Medium conveyed by the piping system	Pipe class II	Pipe class III
Toxic media Flammable media heated above the flash point Flammable media having a flash point below 60°C Liquefied gases Corrosive media	all	not applicable
Steam, thermal oil	PR ≤ 16 and T ≤ 300	PR ≤ 7 and T ≤ 170
Liquid fuels	PR ≤ 16 and T ≤ 150	PR ≤ 7 and T ≤ 60
Cargo pipelines for tankers	all	all
Open-ended pipelines (without shutoff), e.g. drains, venting pipes, overflow lines and boiler blowdown lines	all	all
Other media **(1)**	PR ≤ 40 and T ≤ 300	PR ≤ 16 and T ≤ 200
(1) Including water, air, gases, lubricating oil, hydraulic oil. **Note 1:** Design pressure PR, in bar and Design temperature T, in °C.		

2 General requirements for design and construction

2.1 General principles

2.1.1 Piping systems are to be constructed and manufactured on the basis of standards generally used in vessel building.

2.1.2 Welded connections instead of detachable connections should be used for pipelines carrying toxic media and inflammable liquefied gases.

2.1.3 Expansion in piping systems due to heating and shifting of their suspensions caused by deformation of the vessel are to be compensated by bends, compensators and flexible pipe connections. The arrangement of suitable fixed points is to be taken into consideration

2.2 Materials

2.2.1 General

Materials to be used in piping systems are to be suitable for the medium and the service for which the piping is intended. See Tab 4.

Table 4 : Medium limit temperature

Material	Medium limit temperature
Copper and aluminium brass	200°C
Copper nickel alloys	300°C
High-temperature bronze	230°C

2.2.2 Use of metallic materials

a) Metallic materials are to be used in accordance with Tab 5.

b) Materials for class II piping systems are to be manufactured and tested in accordance with the appropriate requirements of NR216 Materials and Welding.

c) Materials for class III piping systems are to be manufactured and tested in accordance with the requirements of acceptable national or international standards or specifications.

d) Mechanical characteristics required for metallic materials are specified in NR216 Materials and Welding.

2.2.3 Use of plastics

Plastic pipes may be used after special approval by the Society.

Pipes, connecting pieces, valves and fittings made of plastic materials are to be subjected by the manufacturer to a continuous Society-approved quality control.

Pipe penetrations through watertight bulkheads and decks as well as through fire divisions are to be approved by the Society. Plastic pipes are to be continuously and permanently marked with the following particulars:

- manufacturer's marking
- standard specification number
- outside diameter and wall thickness of pipe
- year of manufacture.

Valves and connecting pieces made of plastic must, as a minimum requirement, be marked with the manufacturer's marking and the outside diameter of the pipe.

2.3 Pipe minimum wall thickness

2.3.1 The pipe thicknesses given in Tab 6 to Tab 10 are the assigned minimum thicknesses, where:

d_a : Outside diameter of pipe, in mm

t : Wall thickness, in mm.

Table 5 : Conditions of use of metallic materials

Material	Allowable classes	Maximum design temperature **(1)**	Particular conditions of use
Carbon and carbon-manganese steels	III, II	400 **(2)**	Class II pipes are to be seamless drawn pipes **(3)**
Copper and aluminium brass	III, II	200	• not to be used in fuel oil systems, except for class III pipes of a diameter not exceeding 25 mm not passing through fuel oil tanks • not to be used for boiler blow-down valves not for associated pieces for connection to the shell plating • pipes made of copper and copper alloys are to be seamless
Copper-nickel	III, II	300	
Special high temperature resistant bronze	III, II	260	
Stainless steel	III, II	300	Austenitic stainless steel is not to be used for river/sea water systems
Spheroidal graphite cast iron	III, II **(4)**	350	• minimum elongation is not to be less than 12% on a gauge length of $5,65 \cdot S^{0,5}$, where S is the actual cross-sectional area of the test piece • not to be used for boiler blow-down valves not for associated pieces for connection to the shell plating
Grey cast iron	III II **(4)**	220	Grey cast iron is not to be used for the following systems: • boiler blow-down systems and other piping systems subject to shocks, high stresses and vibrations • bilge lines in tanks • parts of scuppers and sanitary discharge systems located next to the hull below the bulkhead deck • vessel side valves and fittings • valves fitted on the collision bulkhead • valves fitted to fuel oil and lubricating oil tanks under static pressure head • class II fuel oil systems and thermal oil systems
Aluminium and aluminium alloys	III, II	200	Aluminium and aluminium alloys are not to be used on the following systems: • flammable oil systems • sounding and air pipes of fuel oil tanks • fire-extinguishing systems • bilge system in boiler or machinery spaces or in spaces containing fuel oil tanks or pumping units • scuppers and overboard discharges except for pipes led to the bottoms or to the shell above the bulkhead deck or fitted at their upper end with closing means operated from a position above the bulkhead deck • boiler blow-down valves not for associated pieces for connection to the shell plating

(1) Maximum design temperature is not to exceed that assigned to the class of piping.

(2) Higher temperatures may be accepted if metallurgical behaviour and time dependent strength (ultimate tensile strength after 100 000 hours) are in accordance with national or international standards or specifications and if such values are guaranteed by the steel manufacturer.

(3) Pipes fabricated by a welding procedure approved by the Society may also be used.

(4) Use of grey cast iron is not allowed when the design pressure exceeds 1,3 MPa.

2.4 Thickness of pressure piping

2.4.1 Calculation of the thickness of pressure pipes

a) The thickness t, in mm, of pressure pipes is to be determined by the following formula but, in any case, is not to be less than the minimum thickness given in Tab 6 to Tab 10.

$$t = \frac{t_0 + b + c}{1 - \frac{a}{100}}$$

where:

b : Thickness reduction due to bending defined in [2.4.3], in mm

c : Corrosion allowance defined in [2.4.4], in mm

a : Negative manufacturing tolerance percentage:

- a = 10 for copper and copper alloy pipes, cold drawn seamless steel pipes and steel pipes fabricated according to a welding procedure approved by the Society
- a = 12,5 for hot laminated seamless steel pipes
- a is subject to special consideration by the Society in the other cases

t_0 : Coefficient, in mm, equal to:

$$t_0 = \frac{p_C \cdot d_a}{20Ke + p_C}$$

with:

p_C : Design pressure, in bar, defined in [1.3.2]

d_a : Pipe external diameter, in mm

K : Permissible stress defined in [2.4.2]

e : Weld efficiency factor:

- e = 1 for seamless pipes and pipes fabricated according to a welding procedure approved by the Society
- e is specially considered by the Society for the other welded pipes, depending on the service and the manufacture procedure.

b) The thickness thus determined does not take into account the particular loads to which pipes may be subjected. Attention is to be drawn in particular to the case of high temperature and low temperature pipes.

Table 6 : Steel pipes

d_a (mm)	t (mm)	d_a (mm)	t (mm)
up to 10,2	1,6	from 114,3	3,2
from 13,5	1,8	from 133,0	3,6
from 20,0	2,0	from 152,4	4,0
from 48,3	2,3	from 177,8	4,5
from 70,0	2,6	from 244,5	5,0
from 88,9	2,9	from 298,5	5,6

Note 1: For systems where carbon dioxide is stored at ambient temperature, see Tab 7.
Note 2: For steel pipes located inside tanks, see also [5.2.3].

Table 7 : Steel pipes for CO_2 systems

d_a (mm)	t (mm)	
	Between bottles and master valves	Between master valves and nozzles
up to 26,9	3,2	2,6
from 48,3	4,0	3,2
from 60,3	4,5	3,6
from 76,1	5,0	3,6
from 88,9	5,6	4,0
from 101,6	6,3	4,0
from 114,3	7,1	4,5
from 127,8	8,0	4,5
from 139,7	8,0	5,0
from 168,3	8,8	5,6

Table 8 : Copper and copper alloy pipes

Copper pipes		Copper alloy pipes	
d_a (mm)	t (mm)	d_a (mm)	t (mm)
up to 12,2	1,0	up to 22,0	1,0
from 14,0	1,5	from 25,0	1,5
from 44,5	2,0	from 76,0	2,0
from 60,0	2,5	from 108,0	2,5
from 108,0	3,0	from 219,0	3,0
from 159,0	3,5		

Table 9 : Stainless steel pipes

d_a (mm)	t (mm)
0 - 50	1,7
54 - 70	2,0
73 -140	2,1
141 -220	2,8
270 -280	3,4
320 -360	4,0
400 - 460	4,2
500 - 560	4,8

Note 1: A different thickness may be considered by the Society on a case by case basis, provided that it complies with recognised standards.

Table 10 : Aluminium and aluminium alloy pipes

d_a (mm)	t (mm)
0 - 10	1,5
12 - 38	2,0
43 - 57	2,5
76 - 89	3,0
108 - 133	4,0
159 - 194	4,5
219 - 273	5,0
above 273	5,5

Note 1: A different thickness may be considered by the Society on a case by case basis, provided that it complies with recognised standards.
Note 2: For river water pipes, the minimum thickness is not to be less than 5 mm.

2.4.2 Permissible stress

a) The permissible stress K is given in:

- Tab 11 for carbon and carbon-manganese steel pipes
- Tab 12 for alloy steel pipes, and
- Tab 13 for copper and copper alloy pipes,

as a function of the temperature. Intermediate values may be obtained by interpolation.

b) Where, for carbon steel and alloy steel pipes, the value of K is not given in Tab 11 or Tab 12, it is to be taken equal to:

$$K = \min\left(\frac{R_{m,20}}{2,7}, \frac{R_e}{A}, \frac{\sigma_R}{A}, \sigma\right)$$

where:

$R_{m,20}$: Minimum tensile strength of the material at ambient temperature (20°C), in N/mm²

R_e : Minimum yield strength or 0,2% proof stress at the design temperature, in N/mm²

σ_R : Average stress to produce rupture in 100000 h at design temperature, in N/mm²

A : Safety factor to be taken equal to:

- 1,6 when R_e and s_R values result from tests attended by the Society
- 1,8 otherwise

σ : Average stress to produce 1% creep in 100000 h at design temperature, in N/mm².

c) The permissible stress values adopted for materials other than carbon steel, alloy steel, copper and copper alloy will be specially considered by the Society.

Table 11 : Permissible stress K for carbon and carbon-manganese steel pipes

Specified minimum tensile strength (N/mm²)	Design temperature (°C)												
	≤50	100	150	200	250	300	350	400	410	420	430	440	450
320	107	105	99	92	78	62	57	55	55	54	54	54	49
360	120	117	110	103	91	76	69	68	68	68	64	56	49
410	136	131	124	117	106	93	86	84	79	71	64	56	49
460	151	146	139	132	122	111	101	99	98	85	73	62	53
490	160	156	148	141	131	121	111	109	98	85	73	62	53

Table 12 : Permissible stress K for alloy steel pipes

Type of steel	Specified minimum tensile strength (N/mm²)	Design temperature (°C)									
		≤ 50	100	200	300	350	400	440	450	460	470
1Cr1/2Mo	440	159	150	137	114	106	102	101	101	100	99
2 1/4Cr1Mo annealed	410	76	67	57	50	47	45	44	43	43	44
2 1/4Cr1Mo normalised and tempered below 750°C	490	167	163	153	144	140	136	130	128	127	116
2 1/4Cr1Mo normalised and tempered above 750°C	490	167	163	153	144	140	136	130	122	114	105
1/2Cr 1/2Mo 1/4V	460	166	162	147	120	115	111	106	105	103	102

Type of steel	Specified minimum tensile strength (N/mm²)	Design temperature (°C)									
		480	490	500	510	520	530	540	550	560	570
1Cr1/2Mo	440	98	97	91	76	62	51	42	34	27	22
2 1/4Cr1Mo annealed	410	42	42	41	41	41	40	40	40	37	32
2 1/4Cr1Mo normalised and tempered below 750°C	490	106	96	86	79	67	58	49	43	37	32
2 1/4Cr1Mo normalised and tempered above 750°C	490	96	88	79	72	64	56	49	43	37	32
1/2Cr 1/2Mo 1/4V	460	101	99	97	94	82	72	62	53	45	37

Table 13 : Permissible stress K for copper and copper alloy pipes

Material (annealed)	Specified minimum tensile strength (N/mm²)	Design temperature (°C)										
		≤ 50	75	100	125	150	175	200	225	250	275	300
Copper	215	41	41	40	40	34	27,5	18,5				
Aluminium brass	325	78	78	78	78	78	51	24,5				
Copper-nickel 95/5 and 90/10	275	68	68	67	65,5	64	62	59	56	52	48	44
Copper-nickel 70/30	365	81	79	77	75	73	71	69	67	65,5	64	62

Table 14 : Corrosion allowance for steel pipes

Piping system	Corrosion allowance (mm)
Superheated steam	0,3
Saturated steam	0,8
Steam coils in cargo tanks and liquid fuel tanks	2,0
Feed water for boilers in open circuit systems	1,5
Feed water for boilers in closed circuit systems	0,5
Blow-down systems for boilers	1,5
Compressed air	1,0
Hydraulic oil	0,3
Lubricating oil	0,3
Fuel oil	1,0
Thermal oil	1,0
Fresh water	0,8
River water	3,0
Cargo systems for oil tankers	2,0
Cargo systems for chemical tankers	3,0
Cargo systems for vessels carrying liquefied gases	0,3
Note 1: For pipes passing through tanks, an additional corrosion allowance is to be considered in order to account for the external corrosion. **Note 2:** The corrosion allowance of pipes efficiently protected against corrosion may be reduced by no more than 50%. **Note 3:** When the corrosion resistance of alloy steels is adequately demonstrated, the corrosion allowance may be disregarded.	

2.4.3 Thickness reduction due to bending

a) Unless otherwise justified, the thickness reduction b due to bending is to be determined by the following formula:

$$b = \frac{d_a t_0}{2{,}5\rho}$$

where:

ρ : Bending radius measured on the centre line of the pipe, in mm

d_a, t_0 : As defined in [2.4.1].

b) When the bending radius is not given, the thickness reduction is to be taken equal to:

$b = t_0 / 10$

c) For straight pipes, the thickness reduction b is to be taken equal to 0.

2.4.4 Corrosion allowance

The values of corrosion allowance c are given for steel pipes in Tab 14 and for non-ferrous metallic pipes in Tab 15.

2.4.5 Tees

As well as complying with the provisions of [2.4.1] to [2.4.4], the thickness t_T of pipes on which a branch is welded to form a Tee is not to be less than that given by the following formula:

$$t_T = \left(1 + \frac{d_1}{d_a}\right) \cdot t_0$$

where:

d_1 : External diameter of the branch pipe

d_a, t_0 : As defined in [2.4.1].

Note 1: This requirement may be dispensed with for Tees provided with a reinforcement or extruded.

2.5 Pipe connections

2.5.1 Dimensions and calculation

The dimensions of flanges and bolting are to comply with recognized standards.

2.5.2 Pipe connections

The following pipe connections may be used:

- fully penetrating butt welds with/without provision to improve the quality of the root
- socket welds with suitable fillet weld thickness and possibly in accordance with recognized standards
- screw connections of approved type.

For the use of these pipe connections, see Tab 16.

Screwed socket connections and similar connections are not permitted for pipes of classes II and III. Screwed socket connections are allowed only for subordinate systems (e.g. sanitary and hot-water heating systems) operating at low pressures. Screwed pipe connections and pipe coupling may be used subject to special approval.

Table 15 : Corrosion allowance for non-ferrous metal pipes

Piping material **(1)**	Corrosion allowance (mm) **(2)**
Copper	0,8
Brass	0,8
Copper-tin alloys	0,8
Copper-nickel alloys with less than 10% of Ni	0,8
Copper-nickel alloys with at least 10% of Ni	0,5
Aluminium and aluminium alloys	0,5
(1) The corrosion allowance for other materials will be specially considered by the Society. Where their resistance to corrosion is adequately demonstrated, the corrosion allowance may be disregarded. **(2)** In cases of media with high corrosive action, a higher corrosion allowance may be required by the Society.	

Table 16 : Pipe connections

Types of connections	Pipe class	Nominal diameter
Welded butt-joints with special provisions for root side	II, III	all
Welded butt-joints without special provisions for root side	II, III	
Welded sockets	III	
Screwed sockets	see [2.5.2] for subordinate systems	< 50

Steel flanges may be used under considering the allowed pressures and temperatures as stated in the corresponding standards.

Flanges made of non-ferrous metals may be used in accordance with the relevant standards and within the limits laid down in the approvals. Flanges and brazed or welded collars of copper and copper alloys are subject to the following requirements:

a) welding neck flanges according to standard up to 200°C or 300°C for all pipe classes

b) loose flanges with welding collar; as for item a)

c) plain brazed flanges: only for pipe class III up to a nominal pressure of 16 bar and a temperature of 120°C.

Approved pipe couplings are permitted in the following piping systems outside engine rooms:

- bilge and ballast systems
- fuel and oil systems
- fire extinguishing and deck washing systems
- cargo oil pipes
- air, filling and sounding pipes
- sanitary drain pipes
- drinking water pipes.

These couplings may only be used inside machinery spaces if they have been approved by the Society as flame-resistant.

The use of pipe couplings is not permitted in:

- fuel and seawater lines inside cargo spaces
- bilge lines inside fuel tanks and ballast tanks.

2.6 Hose assemblies and compensators

2.6.1 Scope

The following Rules are applicable for hose assemblies and compensators made of non-metallic and metallic materials.

Hose assemblies and compensators made of non-metallic and metallic materials may be used according to their suitability in fuel-, lubricating oil-, hydraulic oil-, bilge-, ballast-, fresh water cooling-, river water cooling-, compressed air-, auxiliary steam, exhaust gas and thermal oil systems.

2.6.2 Definitions

a) Hose assemblies consist of metallic or non-metallic hoses completed with end fittings ready for installation.

b) Compensators consist of bellows with end fittings as well as anchors for absorption of axial loads where angular or lateral flexibility is to be ensured. End fittings may be flanges, welding ends or approved pipe unions.

c) Burst pressure is the internal static pressure at which a hose assembly or compensator will be destroyed.

d) High pressure hose assemblies and compensators

Hose assemblies or compensators which are suitable for use in systems with predominant dynamic load characteristics.

e) Low pressure hose assemblies and compensators

Hose assemblies or compensators which are suitable for use in systems with predominant static load characteristics.

f) Maximum allowable working pressure respectively nominal pressure of hose assemblies and compensators

The maximum allowable working pressure of high pressure hose assemblies is the maximum dynamic internal pressure permitted to be imposed on the components.

The maximum allowable working pressure respectively nominal pressure for low pressure hose assemblies and compensators is the maximum static internal pressure permitted to be imposed on the components.

g) Test pressure

For non-metallic high pressure hose assemblies the test pressure is 2 times the maximum allowable working pressure.

For non-metallic low pressure hose assemblies and compensators the test pressure is 1,5 times the maximum allowable working pressure or 1,5 times the nominal pressure.

For metallic hose assemblies and compensators the test pressure is 1,5 times the maximum allowable working pressure or 1,5 times the nominal pressure.

h) Burst pressure

For non-metallic as well as metallic hose assemblies and compensators the burst pressure is to be at least 4 times the maximum allowable working pressure or 4 times the nominal pressure. Excepted hereof are non-metallic hose assemblies and compensators with a maximum allowable working pressure or nominal pressure of not more than 20 bar. For such components the burst pressure has to be at least three times the maximum allowable working pressure or three times the nominal pressure.

2.6.3 Requirements

a) Hoses and compensators used in the systems mentioned in [2.6.1] are to be of approved type.

b) Manufacturers of hose assemblies and compensators must be recognized by the Society.

c) Hose assemblies and compensators including their couplings are to be suitable for media, pressures and temperatures they are designed for.

d) The selection of hose assemblies and compensators is to be based on the maximum allowable working pressure of the system concerned. A pressure of 5 bar is to be considered as the minimum working pressure.

e) Hose assemblies and compensators for the use in fuel-, lubricating oil-, hydraulic oil-, bilge- and river water systems are to be flame-resistant.

2.6.4 Installations

a) Non-metallic hose assemblies shall only be used at locations where they are required for compensation of relative movements. They shall be kept as short as possible under consideration of the installation instructions of the hose manufacturer.

b) The minimum bending radius of installed hose assemblies shall not be less than specified by the manufacturers.

c) Non-metallic hose assemblies and compensators are to be located at visible and accessible positions.

d) In fresh water systems with a working pressure ≤ 5 bar and in charging and scavenging air lines, hoses may be fastened to the pipe ends with double clips.

e) Where hose assemblies and compensators are installed in the vicinity of hot components they must be provided with approved heat-resistant sleeves.

2.6.5 Vessel cargo hoses

Vessel cargo hoses for cargo-handling on chemical tankers and gas tankers shall be type approved.

Mounting of end fittings is to be carried out only by approved manufacturers.

Vessel cargo hoses are to be subjected to final inspection at the manufacturer under supervision of a Society's Surveyor as follows:

- visual inspection
- hydrostatic pressure test with 1,5 times the maximum allowable working pressure or 1,5 times the nominal pressure. The nominal pressure shall be at least 10 bar
- measuring of the electrical resistance between the end fittings. The resistance shall not exceed 1 kΩ.

2.6.6 Marking

Hose assemblies and compensators must be permanently marked with the following particulars:

- manufacturer's mark or symbol
- date of manufacturing
- type
- nominal diameter
- maximum allowable working pressure respectively nominal pressure
- test certificate number and sign of the responsible Society inspection.

2.7 Shutoff devices

2.7.1 Shutoff devices must comply with a recognized standard. Valves with screwed-on covers are to be secured to prevent unintentional loosening of the cover.

2.7.2 Hand-operated shutoff devices are to be closed by turning in the clockwise direction.

2.7.3 Indicators are to be provided showing the open/closed position of valves unless their position is shown by other means.

2.7.4 Change-over devices in piping systems in which a possible intermediate position of the device could be dangerous in service must not be used.

2.8 Outboard connections

2.8.1 Outboards are to be made of steel or appropriate non-brittle material.

2.8.2 Valves may only be mounted on the vessel's side by means of reinforcing flanges or thick-walled connecting pipes.

2.8.3 Vessel's side valves shall be easily accessible. Water inlet and outlet valves must be capable of being operated from above the floor plates. Cocks on the vessel's side must be so arranged that the handle can only be removed when the cock is closed.

2.8.4 Where a discharge pipe is connected to the vessel's hull below the bulkhead deck, the wall gross thickness of the pipe sections extending between the shell and the nearest shutoff device is to be equal to that of the shell plating in way of the connection, but need not exceed 8 mm.

2.8.5 Outboard connections are to be fitted with shutoff valves.

2.9 Remote controlled valves

2.9.1 Scope

These Rules apply to hydraulically, pneumatically or electrically operated valves in piping systems and sanitary discharge pipes.

2.9.2 Construction

Remote controlled bilge valves and valves important to the safety of the vessel are to be equipped with an emergency operating arrangement.

2.9.3 Arrangement of valves

The accessibility of the valves for maintenance and repairing is to be taken into consideration.

Valves in bilge lines and sanitary pipes must always be accessible.

Bilge lines valves and control lines are to be located as far as possible from the bottom and sides of the vessel.

The requirements stated hereabove also apply here to the location of valves and control lines.

Where remote controlled valves are arranged inside the ballast tanks, the valves should always be located in the tank adjoining that to which they relate.

Remote-controlled valves mounted on high and wing fuel tanks must be capable of being closed from outside the compartment in which they are installed.

Where remote controlled valves are arranged inside cargo tanks, valves should always be fitted in the tank adjoining that to which they relate. A direct arrangement of the remote controlled valves in the tanks concerned is allowed only if each tank is fitted with two suction lines each of which is provided with a remote controlled valve.

2.9.4 Control stands

The control devices of remote controlled valves are to be arranged together in one control stand.

The control devices are to be clearly and permanently identified and marked.

It must be recognized at the control stand whether the valves are open or closed.

In the case of bilge valves and valves for changeable tanks, the closed position is to be indicated by limit-position indicators approved by the Society as well as by visual indicators at the control stand.

On passenger vessels, the control stand for remote controlled bilge valves is to be located outside the machinery spaces and above the bulkhead deck.

2.9.5 Power units

Power units are to be equipped with at least two independent sets for supplying power for remote controlled valves.

The energy required for the closing of valves which are not closed by spring power is to be supplied by a pressure accumulator.

Pneumatically operated valves can be supplied with air from the general compressed air system.

Where the quick-closing valves of fuel tanks are closed pneumatically, a separate pressure accumulator is to be provided. This is to be of adequate capacity and is to be located outside the engine room. Filling of this accumulator by a direct connection to the general compressed air system is allowed. A non-return valve is to be arranged in the filling connection of the pressure accumulator.

The accumulator is to be provided either with a pressure control device with a visual and acoustic alarm or with a hand-compressor as a second filling appliance.

The hand-compressor is to be located outside the engine room.

2.9.6 After installation on board, the entire system is to be subjected to an operational test.

2.10 Pumps

2.10.1 Displacement pumps must be equipped with sufficiently dimensioned relief valves without shutoff to prevent any excessive overpressure in the pump housing.

2.10.2 Rotary pumps must be capable of being operated without damage even when the delivery line is closed.

2.10.3 Pumps mounted in parallel are to be protected against overloading by means of non-return valves fitted at the outlet side.

2.10.4 Pumps for essential services are subject to adequate pressure and running tests.

2.11 Protection of piping systems against overpressure

2.11.1 The following piping systems are to be fitted with safety valves to avoid unallowable overpressures:

- piping systems and valves in which liquids can be enclosed and heated
- piping systems which may be exposed in service to pressures in excess of the design pressure.

Safety valves must be capable of discharging the medium at a maximum pressure increase of 10%. Safety valves are to be fitted on the low pressure side of reducing valves.

2.11.2 Air escaping from the pressure-relief valves of the pressurised air tanks installed in the engine rooms shall be led from the pressure-relief valves to the open air.

3 Welding of steel piping

3.1 General

3.1.1 Welding of steel pipes is to comply with applicable requirements of NR467, Pt C, Ch 1, [3].

4 Bending of pipes

4.1 Application

4.1.1 This Article applies to pipes made of:

- alloy or non-alloy steels
- copper and copper alloys.

4.2 Bending process

4.2.1 General

The bending process is to be such as not to have a detrimental influence on the characteristics of the materials or on the strength of the pipes.

4.2.2 Bending radius

Unless otherwise justified, the bending radius measured on the centreline of the pipe is not to be less than:

- twice the external diameter for copper and copper alloy pipes
- three times the external diameter for cold bent steel pipes.

4.2.3 Acceptance criteria

a) The pipes are to be bent in such a way that, in each transverse section, the difference between the maximum and minimum diameters after bending does not exceed 10% of the mean diameter; higher values, but not exceeding 15%, may be allowed in the case of pipes which are not subjected in service to appreciable bending stresses due to thermal expansion or contraction.

b) The bending is to be such that the depth of the corrugations is as small as possible and does not exceed 5% of their length.

4.2.4 Hot bending

a) In the case of hot bending, all arrangements are to be made to permit careful checking of the metal temperature and to prevent rapid cooling, especially for alloy steels.

b) Hot bending is to be generally carried out in the temperature range 850°C-1000°C for all steel grades; however, a decreased temperature down to 750°C may be accepted during the forming process.

4.3 Heat treatment after bending

4.3.1 Copper and copper alloy

Copper and copper alloy pipes are to be suitably annealed after cold bending if their external diameter exceeds 50 mm.

4.3.2 Steel

a) After hot bending carried out within the temperature range specified in [4.2.4], the following applies:

- for C, C-Mn and C-Mo steels, no subsequent heat treatment is required
- for Cr-Mo and C-Mo-V steels, a subsequent stress relieving heat treatment in accordance with Tab 17 is required.

b) After hot bending performed outside the temperature range specified in [4.2.4], a subsequent new heat treatment in accordance with Tab 18 is required for all grades.

c) After cold bending at a radius lower than 4 times the external diameter of the pipe, a heat treatment in accordance with Tab 18 is required.

Table 17 : Heat treatment temperature

Type of steel	Thickness of thicker part (mm)	Stress relief treatment temperature (°C)
C and C-Mn steels	t ≥ 15 **(1) (2)**	550 to 620
0,3 Mo	t ≥ 15 **(1)**	580 to 640
1 Cr 0,5 Mo	t ≥ 8	620 to 680
2,25 Cr 1 Mo 0,5 Cr 0,5 Mo V	any **(3)**	650 to 720

(1) Where steels with specified Charpy V notch impact properties at low temperature are used, the thickness above which post-weld heat treatment is to be applied may be increased, subject to the special agreement of the Society.

(2) For C and C-Mn steels, stress relieving heat treatment may be omitted up to 30 mm thickness, subject to the special agreement of the Society.

(3) For 2,25Cr 1Mo and 0,5Cr 0,5Mo V grade steels, heat treatment may be omitted for pipes having thickness lower than 8 mm, diameter not exceeding 100 mm and service temperature not exceeding 450°C.

Table 18 : Heat treatment after bending

Type of steel	Heat treatment and temperature (°C)
C and C-Mn	Normalising 880 to 940
0,3 Mo	Normalising 900 to 940
1Cr-0,5Mo	Normalising 900 to 960 Tempering 640 to 720
2,25Cr-1Mo	Normalising 900 to 960 Tempering 650 to 780
0,5Cr-0,5Mo-0,25V	Normalising 930 to 980 Tempering 670 to 720

5 Arrangement and installation of piping systems

5.1 General

5.1.1 Unless otherwise specified, piping and pumping systems covered by the Rules are to be permanently fixed on board vessel.

5.1.2 Piping systems must be adequately identified according to their purpose. Valves are to be permanently and clearly marked.

5.1.3 Piping systems are to be so arranged that they can be completely emptied, drained and vented. Piping systems in which the accumulation of liquids during operation could cause damage must be equipped with special drain arrangements.

5.2 Location of tanks and piping system components

5.2.1 Flammable oil systems

Location of tanks and piping system components conveying flammable fluids under pressure is to comply with [5.9].

5.2.2 Piping systems with open ends

Attention is to be paid to the requirements for the location of open-ended pipes on board vessels having to comply with the provisions of [5.5].

5.2.3 Pipe lines located inside tanks

a) The passage of pipes through tanks, when permitted, normally requires special arrangements such as reinforced thickness or tunnels, in particular for:

- bilge pipes
- ballast pipes
- scuppers and sanitary discharges
- air, sounding and overflow pipes
- fuel oil pipes.

b) Junctions of pipes inside tanks are to be made by welding or flange connections.

5.2.4 Piping and electrical apparatus

As far as possible, pipes are not to pass near switchboards or other electrical apparatus. If this requirement is impossible to satisfy, gutterways or masks are to be provided wherever deemed necessary to prevent projections of liquid or steam on live parts.

5.3 Passage through bulkheads or decks

5.3.1 General

For vessels other than dry cargo vessels, see also the additional requirements for the relevant service notations.

5.3.2 Penetration of watertight bulkheads or decks and fire divisions

a) Where penetrations of watertight bulkheads or decks and fire divisions are necessary for piping and ventilation, arrangements are to be made to maintain the watertight integrity and fire integrity.

b) Lead or other heat sensitive materials are not to be used in piping systems which penetrate watertight subdivision bulkheads or decks, where deterioration of such systems in the event of fire would impair the watertight integrity of the bulkhead or decks.

c) Where bolted connections are used when passing through watertight bulkheads or decks, the bolts are not to be screwed through the plating. Where welded connections are used, they are to be welded on both sides of the bulkhead or deck.

5.3.3 Passage through the collision bulkhead

A maximum of two pipes may pass through the collision bulkhead below the main deck, unless otherwise justified. Such pipes are to be fitted with suitable valves operable from above the main deck. The valve chest is to be secured at the bulkhead inside the fore peak. Such valves may be fitted on the after side of the collision bulkhead provided that they are easily accessible and the space in which they are fitted is not a cargo space.

An indicator is to show whether these valves are open or shut.

5.4 Independence of lines

5.4.1 As a general rule, bilge and ballast lines are to be entirely independent and distinct from lines conveying liquid cargo, lubricating oil and fuel oil, with the exception of:

- pipes located between collecting boxes and pump suctions
- pipes located between pumps and overboard discharges
- pipes supplying compartments likely to be used alternatively for ballast, fuel oil or liquid or dry cargoes, provided such pipes are fitted with blind flanges or other appropriate change-over devices, in order to avoid any mishandling.

5.5 Prevention of progressive flooding

5.5.1 In order to comply with the subdivision and damage stability requirements, provision is to be made to prevent any progressive flooding of a dry compartment served by any open-ended pipe, in the event that such pipe is damaged or broken in any other compartment by collision or grounding.

5.5.2 For this purpose, if pipes are situated within assumed flooded compartments, arrangements are to be made to ensure that progressive flooding cannot thereby extend to compartments other than those assumed to be flooded for each case of damage. However, the Society may permit minor progressive flooding if it is demonstrated that its effects can be easily controlled and the safety of the vessel is not impaired.

5.6 Provision for expansion

5.6.1 General

Piping systems are to be so designed and pipes so fixed as to allow for relative movement between pipes and the vessel's structure, having due regard to the:

- temperature of the fluid conveyed
- coefficient of thermal expansion of the pipes material
- deformation of the vessel's hull.

5.6.2 Fitting of expansion devices

All pipes subject to thermal expansion and those which, due to their length, may be affected by deformation of the hull, are to be fitted with expansion pieces or loops.

5.7 Supporting of the pipes

5.7.1 General

Unless otherwise specified, the fluid lines referred to in this Section are to consist of pipes connected to the vessel's structure by means of collars or similar devices.

5.7.2 Arrangement of supports

Shipyards are to take care that:

a) the arrangement of supports and collars is to be such that pipes and flanges are not subjected to abnormal bending stresses, taking into account their own mass, the metal they are made of, and the nature and characteristics of the fluid they convey, as well as the contractions and expansions to which they are subjected

b) heavy components in the piping system, such as valves, are to be independently supported.

5.8 Valves, accessories and fittings

5.8.1 General

Cocks, valves and other accessories are generally to be arranged so that they are easily visible and accessible for manoeuvring, control and maintenance. They are to be installed in such a way as to operate properly.

5.8.2 Valves and accessories

In machinery spaces and tunnels, the cocks, valves and other accessories of the fluid lines referred to in this Section are to be placed:

- above the floor, or
- when this is not possible, immediately under the floor, provided provision is made for their easy access and control in service.

5.8.3 Flexible hoses and expansion joints

a) Flexible hoses and expansion joints are to be in compliance with [2.6]. They are to be installed in clearly visible and readily accessible locations.

b) The number of flexible hoses and expansion joints is to be kept to minimum.

c) In general, flexible hoses and expansion joints are to be limited to a length necessary to provide for relative movement between fixed and flexibly mounted items of machinery/equipment or systems.

d) The installation of a flexible hose assembly or an expansion joint is to be in accordance with the manufacturer's instructions and use limitations, with particular attention to the following:

  - orientation
  - end connection support (where necessary)
  - avoidance of hose contact that could cause rubbing and abrasion
  - minimum bend radii.

e) Flexible hose assemblies or expansion joints are not to be installed where they may be subjected to torsion deformation (twisting) under normal operating conditions.

f) Where flexible hoses or an expansion joint are intended to be used in piping systems conveying flammable fluids that are in close proximity of heated surfaces, the risk of ignition due to failure of the hose assembly and subsequent release of fluids is to be mitigated, as far as practicable, by the use of screens or other similar protection, to the satisfaction of the Society.

g) The adjoining pipes are to be suitably aligned, supported, guided and anchored.

h) Isolating valves are to be provided permitting the isolation of flexible hoses intended to convey flammable oil or compressed air.

i) Expansion joints are to be protected against over extension or over compression.

j) Where they are likely to suffer external damage, flexible hoses and expansion joints of the bellows type are to be provided with adequate protection.

5.8.4 Thermometers

Thermometers and other temperature-detecting elements in fluid systems under pressure are to be provided with pockets built and secured so that the thermometers and detecting elements can be removed while keeping the piping under pressure.

5.8.5 Pressure gauges

Pressure gauges and other similar instruments are to be fitted with an isolating valve or cock at the connection with the main pipe.

5.8.6 Nameplates

a) Accessories such as cocks and valves on the fluid lines referred to in this Section are to be provided with nameplates indicating the apparatus and lines they serve except where, due to their location on board, there is no doubt as to their purpose.

b) Nameplates are to be fitted at the upper part of air and sounding pipes.

5.9 Additional arrangements for flammable fluids

5.9.1 General

All necessary precautions are to be taken to reduce fire risks from flammable liquids, such as:

- drips
- leaks under pressure
- overflow
- hydrocarbon accumulation in particular under lower floors
- discharges of oil vapours during heating
- soot or unburnt residue in smoke stacks or exhaust pipes.

Unless otherwise specified, the requirements in [5.9.3] apply to:

- fuel oil systems, in all spaces
- lubricating oil systems, in machinery spaces
- other flammable oil systems, in locations where means of ignition are present.

5.9.2 Prohibition of carriage of flammable oils in forepeak tanks

Fuel oil, lubricating oil and other flammable oils are not to be carried in forepeak tanks or tanks forward of the collision bulkhead.

5.9.3 Prevention of flammable oil leakage ignition

a) As far as practicable, the piping arrangement in the flammable oil systems shall comply generally with the following:

  - The conveying of flammable oils through accommodation and service spaces is to be avoided. Where it is not possible, the arrangement may be subject to special consideration by the Society, provided that the pipes are of a material approved having regard to the fire risk.
  - The pipes are not to be located immediately above or close to the hot surfaces (exhaust manifolds, silencers, steam pipelines, boilers, etc.), electrical installations or other sources of ignition. Otherwise, suitably protection (screening and effective drainage to the safe position) is to be provided to prevent of spraying or leakage onto the sources of ignition.

- Parts of the piping systems conveying heated flammable oils under pressure exceeding 1,8 bar are to be placed above the platform or in any other position where defects and leakage can readily be observed. The machinery spaces in way of such parts are to be adequately illuminated.

b) No flammable oil tanks are to be situated where spillage or leakage therefrom can constitute a hazard by falling on:

- hot surfaces, including those of boilers, heaters, steam pipes, exhaust manifolds and silencers
- electrical equipment
- air intakes
- other sources of ignition.

c) Parts of flammable oil systems under pressure exceeding 1,8 bar such as pumps, filters and heaters are to comply with the provisions of item b) above.

d) Pipe connections, expansion joints and flexible parts of flammable oil lines are to be screened or otherwise suitably protected to avoid, as far as practicable, oil spray or oil leakages onto hot surfaces, into machinery air intakes, or on other sources of ignition.

e) Any relief valve or air vent cock fitted within the flammable liquid systems is to discharge to a safe position, such as an appropriate tank.

f) Appropriate means are to be provided to prevent undue opening (due to vibrations) of air venting cocks fitted on equipment or piping containing flammable liquid under pressure.

5.9.4 Provisions for flammable oil leakage containment

a) Tanks used for the storage of flammable oils together with their fittings are to be so arranged as to prevent spillages due to leakage or overfilling.

b) Drip trays with adequate drainage to contain possible leakage from flammable fluid systems are to be fitted:

- under independent tanks
- under burners
- under purifiers and any other oil processing equipment
- under pumps, heat exchangers and filters
- under valves and all accessories subject to oil leakage
- surrounding internal combustion engines.

c) The coaming height of drip trays is to be appropriate for the service and not less than 75 mm.

d) Where drain pipes are provided for collecting leakages, they are to be led to an appropriate drain tank.

e) The draining system of the room where thermal fluid heaters are fitted, as well as the save all of the latter, are not to allow any fire extension outside this room.

5.9.5 Drain tank

a) The drain tank is not to form part of an overflow system and is to be fitted with an overflow alarm device.

b) In vessels required to be fitted with a double bottom, appropriate precautions are to be taken when the drain tank is constructed in the double bottom, in order to avoid flooding of the machinery space where drip trays are located, in the event of accidentally running aground.

5.9.6 Valves

All valves and cocks forming part of flammable oil systems are to be capable of being operated from readily accessible positions and, in machinery spaces, from above the working platform.

5.9.7 Level switches

Level switches fitted to flammable oil tanks are to be contained in a steel or other fire-resisting enclosure.

6 Bilge systems

6.1 Application

6.1.1 This Article does not apply to bilge systems of non-propelled vessels. See [19].

6.1.2 The equipment of vessels with oil-separating facilities is to conform to applicable Society's Rules.

6.1.3 Multihull vessels

Bilge system of multihull vessels shall be specially considered by the Society.

6.2 Principle

6.2.1 General

An efficient bilge pumping system shall be provided, capable of pumping from and draining any watertight compartment other than a space permanently appropriated for the carriage of fresh water, water ballast, fuel oil or liquid cargo and for which other efficient means of pumping are to be provided, under all practical conditions.

Bilge pumping system is not intended at coping with water ingress resulting from structural or main river water piping damage.

6.2.2 Availability of the bilge system

The bilge system is to be able to work while the other essential installations of the vessel, especially the fire-fighting installations, are in service.

6.2.3 Bilge and ballast systems

The arrangement of the bilge and ballast pumping system shall be such as to prevent the possibility of water passing from the river and from water ballast spaces into the cargo and machinery spaces, or from one compartment to another.

Provisions shall be made to prevent any deep tank having bilge and ballast connections being inadvertently flooded from the river when containing cargo, or being discharged through a bilge pump when containing water ballast.

6.3 Design of bilge systems

6.3.1 General

a) The bilge pumping system is to consist of pumps connected to a bilge main line so arranged as to allow the draining of all spaces mentioned in [6.2.1] through bilge branches, distribution boxes and bilge suctions, except for some small spaces where individual suctions by means of hand pumps may be accepted as stated in [6.6.3] and [6.7.5].

b) If deemed acceptable by the Society, bilge pumping arrangements may be dispensed with in specific compartments provided the safety of the vessel is not impaired.

6.3.2 Number and distribution of bilge suctions

a) Draining of watertight spaces is to be possible, when the vessel is on an even keel and either is upright or has a list of up to 5°, by means of at least:

- two suctions at each side in machinery spaces, including one branch bilge suction and one direct suction
- one suction at each side in other spaces.

See also [6.5.4].

b) Bilge suctions are to be arranged as follows:

- wing suctions are generally to be provided except in the case of short and narrow compartments when a single suction ensures effective draining in the above conditions
- in the case of compartments of unusual form, additional suctions may be required to ensure effective draining under the conditions mentioned in item a).

c) In all cases, arrangements are to be made such as to allow a free and easy flow of water to bilge suctions.

6.3.3 Prevention of communication between spaces Independence of the lines

a) Bilge lines are to be so arranged as to avoid inadvertent flooding of any dry compartment.

b) Bilge lines are to be entirely independent and distinct from other lines except where permitted in [5.4].

c) In vessels designed for the carriage of flammable or toxic liquids in enclosed cargo spaces, the bilge pumping system is to be designed to prevent the inadvertent pumping of such liquids through machinery space piping or pumps.

6.4 Draining of cargo spaces

6.4.1 General

a) Cargo holds are to be fitted with bilge suctions connected to the bilge main.

b) Drainage arrangements for cargo holds likely to be used alternatively for ballast, fuel oil or liquid or dry cargoes are to comply with [7.1].

c) Drainage of enclosed cargo spaces intended to carry dangerous goods shall be provided in accordance with Part D, Chapter 3.

6.4.2 Vessels without double bottom

a) In vessels without double bottom, bilge suctions are to be provided in the holds:

- at the aft end in the centreline where the rise of floor exceeds 5°
- at the aft end on each side in other cases.

b) Additional suctions may be required if, due to the particular shape of the floor, the water within the compartment cannot be entirely drained by means of the suctions mentioned in item a) above.

6.4.3 Vessels with double bottom

a) In vessels with double bottom, bilge suctions are to be provided in the holds on each side aft. Where the double bottom plating extends from side to side, the bilge suctions are to be led to wells located at the wings. Where the double bottom plating slopes down to the centreline by more than 5°, a centreline well with a suction is also to be provided.

b) If the inner bottom is of a particular design, shows discontinuity or is provided with longitudinal wells, the number and position of bilge suctions will be given special consideration by the Society.

6.4.4 Vessels with holds over 30 m in length

In holds greater than 30 m in length, bilge suctions are to be provided in the fore and aft ends.

6.4.5 Draining of cargo spaces, other than ro-ro spaces, intended for the carriage of motor vehicles with fuel in their tanks for their own propulsion

See Pt D, Ch 1, Sec 5, [3.2].

6.5 Draining of machinery spaces

6.5.1 General

The bilges of every main and essential auxiliary machinery spaces shall be capable of being pumped as follows:

- through the bilge suctions connected to the main bilge system, and
- through one direct suction connected to the largest independent bilge pump and having a diameter not less than that of the main bilge pipe.

Where all main and essential auxiliary machinery are located in a single watertight space, the bilge suctions are to be distributed and arranged in accordance with the provisions of [6.5.4].

6.5.2 Branch bilge suction

The branch bilge suction is to be connected to the bilge main.

6.5.3 Direct suction

The direct suction is to be led direct to an independent power bilge pump and so arranged that it can be used independently of the main bilge line.

The use of ejectors for pumping through the direct suction will be given special consideration.

6.5.4 Number and distribution of suctions in propulsion machinery spaces

a) In propulsion machinery spaces:
   - where the bottom of the space, bottom plating or top of the double bottom slope down to the centreline by more than 5°, bilge suctions are to include at least two centreline suctions, i.e. one branch bilge suction and one direct suction
   - where the bottom of the space is horizontal or slopes down to the sides and in all passenger vessels, bilge suctions are to be so arranged that the bilges can be completely pumped even under disadvantageous trim conditions.

b) Where the propulsion machinery space is located aft, suctions are normally to be provided on each side at the fore end and, except where not practicable due to the shape of the space, on each side at the aft end of the space.

c) In electrically propelled vessels, provision is to be made to prevent accumulation of water under electric generators and motors.

6.5.5 Monitoring

For monitoring of level of machinery space bilges, see Ch 3, Sec 2.

6.6 Draining of dry spaces other than cargo holds and machinery spaces

6.6.1 General

a) Except where otherwise specified, bilge suctions are to be branch bilge suctions, i.e. suctions connected to a bilge main.

b) Draining arrangements of tanks are to comply with the provisions of [7].

6.6.2 Fore and after peaks

Where the peak tanks are not connected to the ballast system, separate means of pumping are to be provided. Where the after peak terminates at the engine room, it may be drained to the engine room bilge through a pipe fitted with a shutoff valve. Similar emptying of the fore peak into an adjoining space is not permitted.

6.6.3 Spaces above peak tanks

These spaces may either be connected to the bilge system or be pumped by means of hand-operated bilge pumps. Spaces above the after peak may be drained to the machinery space, provided that the drain line is fitted with a self-closing shutoff valve at a clearly visible and easily accessible position. The drain pipes shall have an inside diameter of at least 40 mm.

6.6.4 Cofferdams and void spaces

Bilge pumping arrangements are to be provided for cofferdams and void spaces.

6.6.5 Chain lockers

Chain lockers may be connected to the main bilge system or drained by a hand pump. Draining to the fore peak tank is not permitted.

6.7 Bilge pumps

6.7.1 Number of bilge pumps

Vessels with a propulsion power of up to 225 kW must have one bilge pump, which may be driven from the main engine. Where the propulsion power is greater than 225 kW, a second bilge pump driven independently of the main propulsion plant must be provided.

6.7.2 Use of ejectors

One of the pumps may be replaced by a hydraulic ejector connected to a high pressure water pump and capable of ensuring the drainage under similar conditions to those obtained with the other pump.

On passenger vessels, the pump supplying the ejector is not to be used for other services.

6.7.3 Use of other pumps for bilge duties

a) Other pumps may be used for bilge duties, such as fire, general service, sanitary service or ballast pumps, provided that:
   - they meet the capacity requirements
   - suitable piping arrangements are made
   - pumps are available for bilge duty when necessary.

b) The use of bilge pumps for fire duty is to comply with the provisions of Ch 4, Sec 4.

6.7.4 Capacity of independent pumps

a) The minimum capacity of the main pump is not to be less than:

$$Q_1 = 6 \cdot 10^{-3} \, d_1^2$$

where:

Q_1 : Minimum capacity of the main pump, in m^3/h

d_1 : Internal diameter, in mm, of the main bilge pipe as defined in [6.8.1].

b) The minimum capacity of the second pump is not to be less than:

$$Q_2 = 6 \cdot 10^{-3} \, d_2^2$$

where:

Q_2 : Minimum capacity of the second pump, in m^3/h

d_2 : Internal diameter, in mm, of the branch bilge pipe as defined in [6.8.1].

c) If the capacity of one of the pumps is less than the Rule capacity, the deficiency may be compensated by an excess capacity of the other pump; as a rule, such deficiency is not permitted to exceed 30% of the Rule capacity.

Note 1: This provision does not apply to passenger vessels.

6.7.5 Choice of the pumps

a) Bilge pumps are to be of the self-priming type. Centrifugal pumps are to be fitted with efficient priming means, unless an approved priming system is provided to ensure the priming of pumps under normal operating conditions.

b) Ballast and general service pumps may be accepted as independent power bilge pumps if fitted with the necessary connections to the bilge pumping system.

c) For compartments of small sizes, hand pumps operable from a position located above the load waterline are acceptable.

6.7.6 Connection of power pumps

a) Bilge pumps and other power pumps serving essential services which have common suction or discharge are to be connected to the pipes in such a way that:
- compartments and piping lines remain segregated in order to prevent possible intercommunication
- the operation of any pump is not affected by the simultaneous operation of other pumps.

b) The isolation of any bilge pump for examination, repair or maintenance is to be made possible without impeding the operation of the remaining bilge pumps.

6.8 Size of bilge pipes

6.8.1 The following apply to vessels other than tankers.

The inside diameter of bilge pipes is not to be less than 35 mm nor than the values derived from following formulae:

a) Main bilge pipes:

$$d_1 = 1,5\sqrt{(B + D)L} + 25$$

b) Branch bilge pipes:

$$d_2 = 2,0\sqrt{(B + D)\ell} + 25$$

where:

d_1 : Inside diameter of main bilge pipe, in mm

d_2 : Inside diameter of branch bilge pipe, in mm

L : Rule length, in m, defined in Pt B, Ch 1, Sec 2

B : Breadth, in m, defined in Pt B, Ch 1, Sec 2

D : Depth, in m, defined in Pt B, Ch 1, Sec 2

ℓ : Length of the watertight compartment, in m.

The branch bilge pipe diameter may be taken not greater than the diameter of the main bilge pipe.

6.9 Bilge accessories

6.9.1 Screw-down non-return valves

a) Accessories are to be provided to prevent intercommunication of compartments or lines which are to remain segregated from one another:
- on the pipe connections to bilge distribution boxes
- on the suctions of pumps which also have connections from the river or from compartments normally intended to contain liquid
- on flexible bilge hose connections
- at the open end of bilge pipes passing through deep tanks
- in the discharge pipe of the pump, where the direct suction is connected to a centrifugal pump which can also be used for cooling water, ballast water or fire extinguishing.

b) Screw-down and other non-return valves are to be of a recognised type which does not offer undue obstruction to the flow of water.

6.9.2 Mud boxes

In machinery spaces, termination pipes of bilge suctions are to be straight and vertical and are to be led to mud boxes so arranged as to be easily inspected and cleaned.

The lower end of the termination pipe is not to be fitted with a strum box.

6.9.3 Strum boxes

a) In compartments other than machinery spaces, the open ends of bilge suction pipes are to be fitted with strum boxes or strainers having holes not more than 10 mm in diameter. The total area of such holes is to be not less than twice the required cross-sectional area of the suction pipe.

b) Strum boxes are to be so designed that they can be cleaned without having to remove any joint of the suction pipe.

6.10 Bilge piping arrangement

6.10.1 Passage through double bottom compartments

Bilge pipes are not to pass through double bottom compartments. If such arrangement is unavoidable, the parts of bilge pipes passing through double bottom compartments are to have reinforced thickness as per Tab 14 for steel pipes.

6.10.2 Passage through deep tanks

The parts of bilge pipes passing through deep tanks intended to contain water ballast, fresh water, liquid cargo or fuel oil are normally to be contained within pipe tunnels. Alternatively, such parts are to have reinforced thickness, as per Tab 14 for steel pipes, and are to be made either of one piece or several pieces assembled by welding, by reinforced flanges or by devices deemed equivalent for the application considered; the number of joints is to be as small as possible. These pipes are to be provided at their ends in the holds with non-return valves.

6.10.3 Provision for expansion

Where necessary, bilge pipes inside tanks are to be fitted with expansion bends. Sliding joints are not permitted for this purpose.

6.10.4 Pipe connections

A direct suction from the engine room must be connected to the largest of the specified bilge pumps. Its diameter shall not be less than that of the main bilge pipe.

However, the direct suction in the engine room need be fitted with only one screw-down non-return valve.

Connections used for bilge pipes passing through tanks are to be welded joints or reinforced flange connections.

6.10.5 Access to valves and distribution boxes

All distribution boxes and manually operated valves in connection with the bilge pumping arrangement shall be in positions which are accessible under ordinary circumstances

7 Ballast systems

7.1 Design of ballast systems

7.1.1 Independence of ballast lines

Ballast lines are to be entirely independent and distinct from other lines except where permitted in [5.4].

7.1.2 Prevention of undesirable communication between spaces or with the river

Ballast systems in connection with bilge systems are to be so designed as to avoid any risk of undesirable communication between spaces or with the river.

7.1.3 Alternative carriage of ballast water or other liquids and dry cargo

Holds and deep tanks designed for the alternative carriage of water ballast, fuel oil or dry cargo are to have their filling and suction lines provided with blind flanges or appropriate change-over devices to prevent any mishandling.

7.2 Ballast pumping arrangement

7.2.1 Filling and suction pipes

a) All tanks including aft and fore peak and double bottom tanks intended for ballast water are to be provided with suitable filling and suction pipes connected to special power driven pumps of adequate capacity.

b) Small tanks used for the carriage of domestic fresh water may be served by hand pumps.

c) Suctions are to be so positioned that the transfer of river water can be suitably carried out in the normal operating conditions of the vessel. In particular, two suctions may be required in long compartments.

7.2.2 Pumps

At least two power driven ballast pumps are to be provided, one of which may be driven by the propulsion unit. Sanitary and general service pumps may be accepted as independent power ballast pumps.

Bilge pumps may be used for ballast water transfer provided that:

- they meet the capacity requirements
- suitable piping arrangements are made
- pumps are available for bilge duty when necessary.

7.2.3 Passage of ballast pipes through tanks

If not contained in pipe tunnels, the ballast steel pipes passing through tanks intended to contain fresh water, fuel oil or liquid cargo are:

- to have reinforced thickness, as per Tab 14
- to consist either of a single piece or of several pieces assembled by welding, by reinforced flanges or by devices deemed equivalent for the application considered
- to have a minimal number of joints in these lines
- to have expansion bends in these lines within the tank, where needed
- not to have slip joints.

7.2.4 Ballast valves and piping arrangements

a) Ballast tank valves

Valves controlling flow to ballast tanks are to be arranged so that they remain closed at all times except when ballasting. Where butterfly valves are used, they are to be of a type able to prevent movement of the valve position due to vibration or flow of fluids.

b) Remote control valves

Remote control valves, where fitted, are to be arranged so that they close and remain closed in the event of loss of control power. The valves may remain in the last ordered position upon loss of power, provided that there is a readily accessible manual means to close the valves upon loss of power.

Remote control valves are to be clearly identified as to the tanks they serve and are to be provided with position indicators at the ballast control station.

8 Drinking water, scuppers and sanitary discharges

8.1 Drinking water systems

8.1.1 Drinking water tanks

a) Scantlings of drinking water tanks forming part of the vessel's structure are to comply with Pt B, Ch 5, Sec 5.

Scantlings of independent drinking water tanks are to comply with Pt B, Ch 6, Sec 7, [3].

b) Drinking water tanks shall not share walls with other tanks.

c) Pipes which do not carry drinking water shall not be routed through drinking water tanks.

d) Air and overflow pipes of drinking water tanks are to comply with [9]. They may not be connected to other pipes and may not be routed through tanks which do not contain drinking water. The upper openings of air and overflow pipes are to be protected against the entry of insects.

e) Sounding pipes must terminate at a sufficient height above the deck and may not be laid through tanks which contain other media than water.

8.1.2 Drinking water piping

a) Drinking water piping may not be connected to piping systems carrying other media and may not be laid through tanks not containing drinking water.

b) The supply of drinking water into tanks other than drinking water tanks, e.g. expansion tanks of engine fresh water cooling systems, must take place through open funnels or devices to prevent flow-back.

c) The filling connections of drinking water tanks are to be placed at a sufficient height above the deck and must be capable of being closed.

8.1.3 Drinking water pumps

Separate drinking water pumps are to be provided for drinking water systems.

8.2 Scuppers and sanitary discharges

8.2.1 Application

a) This sub-article applies to:
   - scuppers and sanitary discharge systems, and
   - discharges from sewage tanks.

b) Discharges in connection with machinery operation are dealt with in [2.8].

8.2.2 For scuppers and overboard discharges materials and scantlings, see Pt B, Ch 6, Sec 7, [4].

8.2.3 Sewage and grey water discharges

The requirements specified below are general and should apply to any vessel fitted with sewage and grey water piping systems.

a) Except otherwise specified, the sewage (or black water) means:
   - drainage and other wastes from any form of toilets and urinals
   - drainage from medical premises (dispensary, sick bay, etc.) via wash basins, wash tubs and scuppers located in such premises
   - drainage from spaces containing living animals, or
   - other waste waters when mixed with the drainages defined above.

b) Grey water means other sanitary discharges which are not sewage.

c) In general, sewage systems should be of a design which will avoid the possible generation of toxic and flammable gases (such as hydrogen sulphide, methane, ammonia) during the sewage collection and treatment. Additional means of protection is to be suitable ventilation of the pipework and tanks.

d) Drain lines from the hospital area should be, as far as practicable, separated from other discharges and fitted to the drain collector at the lowest level.

e) Sewage and grey water may be collected into storage tanks together or separately, either for holding prior to transfer to a treatment unit, or for later discharge. Any tank used for holding sewage shall comply with the following:
   - suitable air pipes shall be fitted, leading to the open deck
   - design and configuration of those tanks should be such as to facilitate the effective drainage and flushing of the tanks
   - suitable means for flushing of the tanks shall be provided
   - such tanks are to be efficiently protected against corrosion
   - tanks shall have a means to indicate visually the amount of its content
   - suitable means for emptying sewage tanks through the standard discharge connection to reception facilities shall be provided. Ballast and bilge pumps are not be used for that purpose.

f) Air pipes from the sewage and grey water systems are to be independent of all other air pipes and to be led to the outside of the vessel, away from any air intake. Such pipes should not terminate in areas to which personnel have frequent access and should be clear of any sources of ignition.

g) The overboard discharges shall be located as far from river water inlets as possible, seen in the direction of travel. In general, the sewage outlets should be located below loadline.

h) The sewage and grey water discharge lines are to be fitted at the vessels' side with screw-down valve and non-return valve.

The non-return valve may be omitted where the open inlets of the sanitary discharge are situated sufficiently high above the bulkhead deck and the pipe wall thicknesses are equal to that of the vessel’s shell.

9 Air, sounding and overflow pipes

9.1 Air pipes

9.1.1 Principle

Air pipes are to be fitted to all tanks, double bottoms, cofferdams, tunnels and other compartments which are not fitted with alternative ventilation arrangements, in order to allow the passage of air or liquid so as to prevent excessive pressure or vacuum in the tanks or compartments, in particular in those which are fitted with piping installations.

9.1.2 Number and position of air pipes

a) Air pipes are to be so arranged and the upper part of compartments so designed that air or gas likely to accumulate at any point in the compartments can freely evacuate.

b) Air pipes are to be fitted opposite the filling pipes and/or at the highest parts of the compartments, the vessel being assumed to be on an even keel.

c) Where only one air pipe is provided, it is not to be used as a filling pipe.

9.1.3 Location of open ends of air pipes

a) Air pipes of double bottom compartments, tunnels, deep tanks and other compartments which can come into contact with the river/sea or be flooded in the event of hull damage are to be led to above the bulkhead deck.

Note 1: In vessels not provided with a double bottom, air pipes of small cofferdams or tanks not containing fuel oil or lubricating oil may discharge within the space concerned.

b) Air pipes of tanks intended to be pumped up are to be led to the open above the bulkhead deck.

c) Air pipes other than those of flammable oil tanks may be led to enclosed cargo spaces situated above the bulkhead deck, provided that:
   - overflow pipes are fitted in accordance with [9.3.4], where the tanks may be filled by pumping

- enclosed cargo spaces are fitted with scuppers discharging overboard and being capable of draining all the water which may enter through the air pipes without giving rise to any water accumulation
- suitable drainage arrangement is to be fitted below the air pipe outlet, leading to the nearest scupper
- such arrangement is not to impair integrity of fire divisions or watertight decks and bulkheads subject to the damage stability requirements.

d) The air pipe of the scupper tank is to be led to above bulkhead deck.

9.1.4 Height of air pipes

The open ends of air pipes are to be so arranged as to prevent the free entry of water in the compartment.

The height d_{AP}, in m, of air pipes extending above the bulkhead deck is to be such that:

$$z_{AP} \geq \max (T + h_2; z_{LE}) + \delta_{AP}$$

where:

z_{AP} : Z co-ordinate, in m, of the top of air pipe

z_{LE} : Z co-ordinate, in m, of the lower end (above bulkhead deck) of air pipe

h_2 : Reference value of the relative motion, in m, defined in Pt B, Ch 3, Sec 3, [2.2.1]

T : Draught, in m, defined in Pt B, Ch 1, Sec 2

δ_{AP} : Increase of air pipe height, in m, to determined according to Tab 19.

Table 19 : Increase of air pipe

Range of navigation	δ_{AP}, in m	
	Closing device fitted	No closing device fitted
IN	0,15	0,2
IN(x ≤ 2)		2n
n : Navigation coefficient defined in Pt B, Ch 3, Sec 1, [5.2]		

9.1.5 Construction of air pipes

Where tanks are filled by pumping through permanently installed pipelines, the inside cross-section of the air pipes must equal at least 125% that of the corresponding filling pipe.

9.1.6 Special arrangements for air pipes of flammable oil tanks

Air pipes from fuel oil and thermal oil tanks are to discharge to a safe position on the open deck where no danger will be incurred from issuing oil or gases.

Air pipes of lubricating or hydraulic oil storage tanks, which are neither heated nor subject to flooding in the event of hull damage, may be led to machinery spaces, provided that in the case of overflowing the oil cannot come into contact with electrical equipment, hot surfaces or other sources of ignition.

Air pipes of lubricating oil tanks, gear and engine crankshaft casings shall not be led to a common line.

9.1.7 Other arrangements for air pipes

Air pipes are to be laid vertically. Air pipes passing through cargo holds are to be protected against damage.

Cofferdams and void spaces with bilge connections must be provided with air pipes terminating above the open deck.

9.2 Sounding pipes

9.2.1 Principle

a) Sounding devices are to be fitted to tanks intended to contain liquids as well as to all compartments which are not readily accessible at all times, i.e. void spaces, cofferdams and bilges (bilge wells).

b) For compartments normally intended to contain liquids, the following systems may be accepted in lieu of sounding pipes:
   - a level gauge of an approved type efficiently protected against shocks, or
   - a remote level gauging system of an approved type, provided an emergency means of sounding is available in the event of failure affecting such system.

c) The internal diameter of sounding pipes is not to be less than 32 mm. Where sounding pipes pass through refrigerated spaces, or through the insulation of refrigerated spaces in which the temperature may be below 0°C, their internal diameter is to be at least 60 mm.

Figure 1 : Height of air pipes

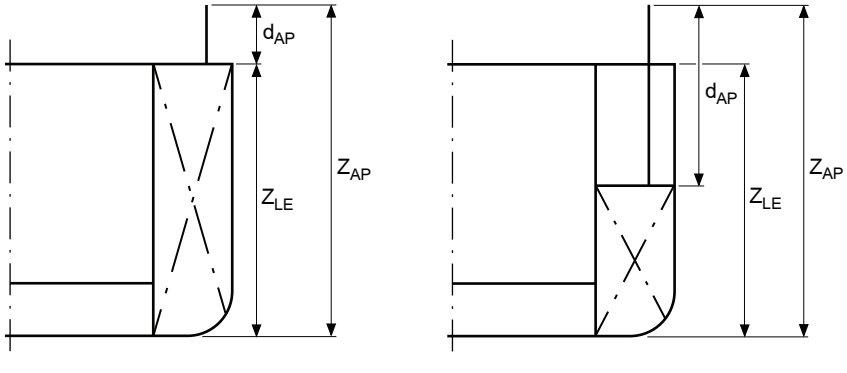

9.2.2 General arrangement

As far as possible, sounding pipes are to be laid straight and are to extend as near as possible to the bottom of the tank.

Sounding pipes which terminate below the deepest load waterline are to be fitted with self-closing shutoff devices. Such sounding pipes are only permissible in spaces which are accessible at all times. All other sounding pipes are to be extended to the open deck. The sounding pipe openings must always be accessible and fitted with watertight closures.

Sounding pipes of tanks are to be provided close to the top of the tank with holes for equalizing the pressure.

A striking pad is to be fitted under every sounding pipe. Where sounding pipes are connected to the tanks over a lateral branch pipe, the branch-off under the sounding pipe is to be adequately reinforced.

9.2.3 Sounding pipes for fuel and lubricating oil tanks

Where sounding pipes cannot be extended above the open deck, they must be provided with self-closing shutoff devices as well as with self-closing test valves.

The openings of sounding pipes must be located at a sufficient distance from boilers, electrical equipment and hot components.

Sounding pipes shall not terminate in accommodation or service spaces. They are not to be used as filling pipes.

9.3 Overflow pipes

9.3.1 Principle

Overflow pipes are to be fitted to tanks:

- which can be filled by pumping and are designed for a hydrostatic pressure lower than that corresponding to the height of the air pipe, or
- where the cross-sectional area of air pipes is less than that prescribed in [9.1.5].

9.3.2 Design of overflow systems

a) Overflow pipes are to be led:
   - either outside, or
   - in the case of fuel oil or lubricating oil, to an overflow tank of adequate capacity or to a storage tank having a space reserved for overflow purposes.

b) Overflows from service tanks are generally to be led back either to the fuel bunkers, or to an overflow tank of appropriate capacity.

c) Where tanks containing the same or different liquids are connected to a common overflow system, the arrangement is to be such as to prevent any risk of:
   - intercommunication between the various tanks due to movements of liquid when emptying or filling, or due to the inclination of the vessel
   - overfilling of any tank from another assumed flooded due to hull damage.

   For this purpose, overflow pipes are to be led to a high enough point above the deepest load waterline or, alternatively, non-return valves are to fitted where necessary.

d) Arrangements are to be made so that a compartment cannot be flooded from the river water through the overflow in the event of another compartment connected to the same overflow main being bilged. To this end, the openings of overflow pipes discharging overboard are as a rule to be placed above the deepest load waterline and are to be fitted where necessary with non-return valves on the plating, or, alternatively, overflow pipes from tanks are to be led to a point above the deepest load waterline.

e) Where tanks alternately containing fuel oil and ballast water are connected to a common overflow system, arrangements are to be made to prevent the ballast water overflowing into the tanks containing fuel oil and vice-versa.

9.3.3 Overflow tanks

a) Overflow tanks are to be fitted with an air pipe complying with [9.1] which may serve as an overflow pipe for the same tank. When the vent pipe reaches a height exceeding the design head of the overflow tank, suitable means are to be provided to limit the actual hydrostatic head on the tank.

   Such means are to discharge to a position which is safe in the opinion of the Society.

b) An alarm device is to be provided to give warning when the oil reaches a predetermined level in the tank, or alternatively, a sight-flow glass is to be provided in the overflow pipe to indicate when any tank is overflowing. Such sight-flow glasses are only to be placed on vertical pipes and in readily visible positions.

9.3.4 Specific arrangements for construction of overflow pipes

a) The internal diameter of overflow pipes is not to be less than 50 mm.

b) In each compartment which can be pumped up, the total cross-sectional area of overflow pipes is not to be less than 1,25 times the cross-sectional area of the corresponding filling pipes.

c) The cross-sectional area of the overflow main is not to be less than the aggregate cross-sectional area of the two largest pipes discharging into the main.

d) Where overflow sight glasses are provided, they shall be in a vertically dropping line on readily visible position, fitted with adequate protection from mechanical damage and well lit.

   The overflow sight glasses are not to be used in fuel oil systems.

   Use of the overflow sight glasses in lubricating oil systems may be accepted provided that:
   - they are so designed that oil does not impinge on the glass
   - the glass is to be of heat resisting quality.

10 Water cooling systems

10.1 Application

10.1.1 This Article applies to cooling systems using the following cooling media:

- river water
- fresh water.

Lubricating oil and air cooling systems will be given special consideration.

10.2 Principle

10.2.1 River water and fresh water cooling systems are to be so arranged as to maintain the temperature of the cooled media (lubricating oil, hydraulic oil, charge air, etc.) for propulsion machinery and essential equipment within the manufacturers' recommended limits during all operations, including starting and manoeuvring, under the inclination angles and the ambient conditions specified in Ch 1, Sec 1.

10.3 Design of river water cooling systems

10.3.1 River chest

Each river chest is to be provided with an air pipe which can be shutoff and which must extend above the bulkhead deck (see Pt B, Ch 1, Sec 2, [2.12], for definition). The inside diameter of the air pipe must be compatible with the size of the river chests and shall not be less than 30 mm.

Where compressed air is used to blow through river chests, the pressure shall not exceed 2 bar.

10.3.2 Intake valves

Two valves are to be provided for main propulsion plants:

- one valve at the water inlet secured:
  - directly on the shell plating, or
  - on river chest built on the shell plating, with scantlings in compliance with Pt B, Ch 6, Sec 7, [2]
- one valve at the cooler inlet.

The cooling water pumps of important auxiliaries should be connected to the river chests over separate valves.

10.3.3 Filters

The suction lines of cooling water pumps for main engines are to be fitted with filters which can be cleaned in service.

10.4 Design of fresh water cooling systems

10.4.1 General

Fresh water cooling systems are to be designed according to the applicable requirements of [10.3].

10.4.2 Expansion tanks

The fresh water cooling system is to be provided with expansion tanks located at a sufficient height. The tanks are to be fitted with a filling connection, a water level indicator and an air pipe. A venting shall connect the highest point of the cooling water common pipe to the expansion tank.

In closed circuits, the expansion tanks are to be fitted with overpressure/underpressure valves.

10.4.3 Water coolers

For fresh water coolers forming part of the vessel's shell plating and for special outboard coolers, provision must be made for satisfactory deaeration of the cooling water.

10.5 Control and monitoring

10.5.1 For control and monitoring of water cooling systems of diesel engines, see Ch 3, Sec 2, Tab 1.

11 Fuel oil systems

11.1 Application

11.1.1 Scope

This Article applies to all fuel oil systems supplying any kind of installation.

The fuel oils used on board are to comply with Ch 1, Sec 1, [2.9].

11.1.2 For fuel oil supply equipment forming part of:

- diesel engines: see Ch 1, Sec 2, [2.4.2]
- boilers and thermal oil heaters: see Ch 1, Sec 4.

11.2 Fuel oil tanks

11.2.1 Liquid fuel oil must be carried in oiltight tanks which may either form part of the hull or must be solidly connected with the vessel's hull.

11.2.2 Fuel oil tanks provided in the machinery space are not to be located above the boilers nor in places where they are likely to reach a high temperature, unless special arrangements are provided with the agreement of the Society.

11.2.3 Where a cargo space is adjacent to a fuel oil bunker/tank which is provided with heating system, the fuel oil bunker/tank boundaries are to be adequately heat insulated.

11.2.4 Arrangements are to be made to restrict leaks through the bulkheads of liquid fuel tanks adjacent to the cargo space.

11.2.5 Gutterways are to be fitted at the foot of bunker bulkheads, in the cargo space and in the machinery space in order to facilitate the flow of liquid due to eventual leaks towards the bilge suctions.

The gutterways may however be dispensed with if the bulkheads are entirely welded.

11.2.6 Where ceilings are fitted on the tank top or on the top of deep tanks intended for the carriage of fuel oil, they are to rest on grounds 30 mm in depth so arranged as to facilitate the flow of liquid due to eventual leaks towards the bilge suctions.

The ceilings may be positioned directly on the plating in the case of welded top platings.

11.2.7 Tanks and fuel pipes are to be so located and equipped that fuel cannot spread either inside the vessel or on deck and cannot be ignited by hot surfaces or electrical equipment. Tanks are to be fitted with air and overflow pipes to prevent excessive pressure (see [9]).

If tanks are interconnected, the cross section of the connecting pipe shall be at least 1,25 times the cross section of the filler neck.

11.2.8 Fuel supply

The fuel supply is to be stored in several tanks so that, even in event of damage to one tank, the fuel supply will not be entirely lost (at least 1 storage tank and 1 service/settling tank).

11.2.9 Location

The location of fuel oil tanks is to be in compliance with Pt B, Ch 2, Sec 1, [2.1], particularly as regards the installation of cofferdams, the separation between fuel oil tanks or bunkers and other spaces of the vessel.

No fuel oil tanks may be located forward of the collision bulkhead.

11.2.10 Scantlings

Scantlings of fuel oil tanks forming part of the vessel's structure are to comply with Pt B, Ch 5, Sec 5.

Scantlings of independent fuel oil tanks are to comply with Pt B, Ch 6, Sec 7, [3].

11.3 Fuel tank fittings and mountings

11.3.1 For fuel filling and suction systems see [11.5]. For air, overflow and sounding pipes, see [9].

The open ends of air pipes and overflow pipes leading to the deck shall be provided with a protecting screen.

11.3.2 Service tanks are to be so arranged that water and residues can settle out despite the movement of the vessel.

11.3.3 Free discharge and drainage lines must be fitted with self-closing shutoff valves.

11.3.4 Tank gauges

The following tank gauges are permitted:

- sounding pipes
- oil level indicating devices
- oil gauges with flat glasses and self-closing shutoff valves at the connections to the tank and protected against external damage.

For fuel storage tanks, the provision of sounding pipes is sufficient. Such sounding pipes need not be fitted to tanks equipped with oil level indicating devices which have been type-tested by the Society.

Fuel service tank supplying the main propulsion unit, important auxiliaries and the driving engines for bow thruster are to be fitted with visual and audible low level alarm which has been approved by the Society.

See also Ch 3, Sec 2.

The low level alarm shall be fitted at a height which enables the vessel to reach a safe location in accordance with the class notation without refilling the service tank.

Sight glasses and oil gauges fitted directly on the side of the tank and round glass oil gauges are not permitted.

Sounding pipes of fuel tanks may not terminate in accommodation nor shall they terminate in spaces where the risk of ignition of spillage from the sounding pipes might arise.

11.4 Attachment of mountings and fittings to fuel tanks

11.4.1 Only appliances, mountings and fittings forming part of the fuel tank equipment may generally be fitted to tank surfaces.

11.4.2 Valves and pipe connections are to be attached to strengthening flanges welded to the tank surfaces. Holes for attachment bolts must not be drilled in the tank surfaces. Instead of strengthening flanges, short, thick pipe flange connections may be welded into the tank surfaces.

11.5 Filling and delivery system

11.5.1 The filling of fuels is to be effected from the open deck through permanently installed lines.

11.6 Tank filling and suction systems

11.6.1 Fuel pumps are to be equipped with emergency stops.

11.6.2 All suction lines from fuel oil tanks and bunkers, and filling lines terminating below the maximum oil level in the tank must be fitted with remote controlled shutoff valves directly on the tank.

11.6.3 The emergency stops and the remote-controlled shutoff valves must be capable of being operated from a permanently accessible open deck and protected from unauthorized use.

11.6.4 Air and sounding pipes shall not be used to fill fuel tanks.

11.6.5 The inlet openings of suction pipes must be located above the drain pipes.

11.6.6 Service tanks of up to 50 litres capacity mounted directly on diesel engines need not be fitted with remote controlled shutoff valves.

11.7 Pipe layout

11.7.1 Fuel lines may not pass through tanks containing feedwater, drinking water or lubricating oil.

11.7.2 Fuel lines may not be laid in the vicinity of hot engine components, boilers or electrical equipment. The number of detachable pipe connections is to be limited. Shutoff valves in fuel lines shall be operable from above the floor plates in machinery spaces.

Glass and plastic components are not permitted in fuel systems.

11.7.3 Shutoff valves in fuel return (spill) lines to tanks may be permitted, ensuring that return line to the tanks under normal operating conditions will not be blocked.

11.8 Filters

11.8.1 Fuel supply lines to continuously operating engines are to be fitted with duplex filters with a changeover cock or with self-cleaning filters. By-pass arrangements are not permitted.

11.9 Control and monitoring

11.9.1 See Ch 3, Sec 2.

12 Lubricating oil systems

12.1 Application

12.1.1 Scope

This Article applies to lubricating oil systems serving all kind of installations (e.g., diesel engines, turbines, reduction gears, clutches), for lubrication purposes.

12.1.2 For lubricating oil supply equipment forming part of:

- diesel engines: see Ch 1, Sec 2, [2.4.3]
- reduction gears and clutches: see Ch 1, Sec 6.

12.2 Lubricating oil tank

12.2.1 Lubricating oil must be carried in oiltight tanks which may either form part of the hull or must be solidly connected with the vessel's hull.

12.2.2 Lubricating oil tanks and their fittings shall not be located directly above engines or exhaust pipes.

12.2.3 Lubricating oil tanks and pipes are to be so located and equipped that lubricating oil cannot spread either inside the vessel or on deck and cannot be ignited by hot surfaces or electrical equipment. Tanks are to be fitted with air and overflow pipes to prevent excessive pressure (see [9]).

12.2.4 The location of lubricating oil tanks is to be in compliance with Pt B, Ch 2, Sec 1, [2.1], particularly as regards the installation of cofferdams, the separation between lubricating oil tanks and other spaces of the vessel.

No lubricating oil tanks may be located forward of the collision bulkhead.

12.2.5 Scantlings of lubricating oil tanks forming part of the vessel's structure are to comply with Pt B, Ch 5, Sec 5.

Scantlings of independent lubricating oil tanks are to comply with Pt B, Ch 6, Sec 7, [3].

12.2.6 Control and monitoring

See Ch 3, Sec 2.

12.3 Tank fittings and mountings

12.3.1 Oil level glasses are to be connected to the tanks by means of self-closing shutoff valves.

12.4 Capacity and construction of tanks

12.4.1 Lubricating oil circulating tanks should be sufficiently large to ensure that the dwelling time of the oil is long enough for the expulsion of air bubbles, the settling out of residues etc. The tanks must be large enough to hold at least the lubricating oil contained in the entire circulation system.

12.4.2 Measures, such as the provision of baffles or limber holes are to be taken to ensure that the entire contents of the tank remain in circulation. Limber holes should be located as near the bottom of the tank as possible. Lubricating oil drain pipes from engines are to be submerged closed to the tank bottom at their outlet ends. Suction pipe connections should be placed as far as is practicable from oil drain pipes so that neither air nor sludge can be sucked up irrespective of the inclination of the vessel.

12.4.3 Lubricating oil drain tanks are to be equipped with vent pipes in compliance with [9].

12.5 Lubricating oil piping

12.5.1 Lubricating oil systems are to be constructed to ensure reliable lubrication over the whole range of speed and during run-down of the engines and to ensure adequate heat transfer.

12.5.2 Priming pumps

Where necessary, priming pumps are to be provided for supplying lubricating oil to the engines.

12.6 Lubricating oil pumps

12.6.1 The suction connections of lubricating oil pumps are to be located as far as possible from drain pipes.

12.7 Filters

12.7.1 Change-over duplex filters or automatic back-flushing filters are to be mounted in lubricating oil lines on the delivery side of the pumps.

13 Thermal oil systems

13.1 General

13.1.1 Thermal oil systems shall be installed in accordance with applicable provisions of Ch 1, Sec 3.

13.1.2 Thermal oil must be carried in oiltight tanks which may either form part of the hull or must be solidly connected with the vessel's hull.

13.1.3 Thermal oil tanks and their fittings shall not be located directly above engines or exhaust pipes.

13.1.4 Thermal oil tanks and pipes are to be so located and equipped that thermal oil cannot spread either inside the vessel or on deck and cannot be ignited by hot surfaces or electrical equipment. Tanks are to be fitted with air and overflow pipes to prevent excessive pressure (see [9]).

13.1.5 The location of thermal oil tanks is to be in compliance with Pt B, Ch 2, Sec 1, [2.1], particularly as regards the installation of cofferdams, the separation between thermal oil tanks and other spaces of the vessel.

No thermal oil tanks may be located forward of the collision bulkhead.

13.2 Pumps

13.2.1 Circulating pumps

At least two circulating pumps are to be provided, of such a capacity as to maintain a sufficient flow in the heaters with any one pump out of action.

However, for circulating systems supplying non-essential services, one circulating pump only may be accepted.

13.2.2 Transfer pumps

A transfer pump is to be installed for filling the expansion tank.

13.2.3 The pumps are to be so mounted that any oil leakage can be safely disposed of.

13.2.4 For emergency stopping, see Ch 4, Sec 2, [2.1].

13.3 Valves

13.3.1 Only valves made of ductile materials may be used.

13.3.2 Valves shall be designed for a nominal pressure of PN 16.

13.3.3 Valves are to be mounted in accessible positions.

13.3.4 Non-return valves are to be fitted in the pressure lines of the pumps.

13.3.5 Valves in return pipes are to be secured in the open position.

13.4 Piping

13.4.1 The material of the sealing joints is to be suitable for permanent operation at the design temperature and resistant to the thermal oil.

13.4.2 Provision is to be made for thermal expansion by an appropriate pipe layout and the use of suitable compensators.

13.4.3 The pipe lines are to be preferably connected by means of welding. The number of detachable pipe connections is to be minimized.

13.4.4 The laying of pipes through accommodation, public or service spaces is not permitted.

13.4.5 Pipelines passing through cargo holds are to be installed in such a way that no damage can be caused.

13.4.6 Pipe penetrations through bulkheads and decks are to be insulated against conduction of heat.

13.4.7 The venting is to be so arranged that air/oil mixtures can be carried away without danger.

13.5 Testing

13.5.1 Tightness and operational tests

After installation, the entire arrangement is to be subjected to tightness and operational testing under the supervision of the Society.

13.5.2 Hydraulic tests

For hydraulic tests, see [20].

13.6 Equipment of thermal oil tanks

13.6.1 For the equipment of thermal oil tanks, see Ch 1, Sec 3, [3.3].

14 Hydraulic systems

14.1 General

14.1.1 Scope

The Rules contained in this Article apply to hydraulic power installations used, for example, to operate closing appliances in the vessel's shell, landing ramps and hoists. The Rules are to be applied in analogous manner to vessel's other hydraulic systems.

14.1.2 Hydraulic oil must be carried in oiltight tanks which may either form part of the hull or must be solidly connected with the vessel's hull.

14.1.3 Hydraulic oil tanks and their fittings shall not be located directly above engines or exhaust pipes.

14.1.4 Hydraulic oil tanks and pipes are to be so located and equipped that hydraulic oil cannot spread either inside the vessel or on deck and cannot be ignited by hot surfaces or electrical equipment. Tanks are to be fitted with air and overflow pipes to prevent excessive pressure (see [9]).

14.1.5 The location of hydraulic oil tanks is to be in compliance with Pt B, Ch 2, Sec 1, [2.1], particularly as regards the installation of cofferdams, the separation between hydraulic oil tanks and other spaces of the vessel.

No Hydraulic oil tanks may be located forward of the collision bulkhead.

14.1.6 Scantlings of hydraulic oil tanks forming part of the vessel's structure are to comply with Pt B, Ch 5, Sec 5.

Scantlings of independent hydraulic oil tanks are to comply with Pt B, Ch 6, Sec 7, [3].

14.2 Dimensional design

14.2.1 For the design of pressure vessels, see Ch 1, Sec 3, [2], for the dimensions of pipes, see [2.4].

14.3 Materials

14.3.1 Approved materials

Components fulfilling a major function in the power transmission system shall normally be made of steel or cast steel in accordance with NR216 Materials and Welding. The use of other materials is subject to special agreement with the Society.

Cylinders are preferably to be made of steel, cast steel or nodular cast iron (with a predominantly ferritic matrix).

Pipes are to be made of seamless or longitudinally welded steel tubes.

The pressure-loaded walls of valves, fittings, pumps, motors, etc., are subject to the requirements of [20].

14.3.2 Testing of materials

The materials of pressure casings and pressure oil lines must possess mechanical characteristics in conformity with NR216 Materials and Welding. Evidence of this may take the form of a certificate issued by the steelmaker which contains details of composition and the results of the tests prescribed in NR216 Materials and Welding.

14.4 Design and equipment

14.4.1 Control

a) Hydraulic systems may be supplied either from a common power station or from a number of power stations, each serving a particular system.

b) Where the supply is from a common power station and in the case of hydraulic drives whose piping system is connected to other hydraulic systems, a second pump set is to be provided.

c) Hydraulic systems shall not be capable of being initiated merely by starting the pump. The movement of the equipment is to be controlled from special operating stations. The controls are to be so arranged that, as soon as they are released, the movement of the hoist ceases immediately.

d) Local controls, inaccessible to unauthorized persons, are to be fitted. The movement of hydraulic equipment should normally be visible from the operating stations. If the movement cannot be observed, audible and/or visual warning devices are to be fitted. In addition, the operating stations are then to be equipped with indicators for monitoring the movement of the hoist.

e) In or immediately at each power unit (ram or similar) used to operate equipment which moves vertically or rotates about a horizontal axis, suitable precautions must be taken to ensure a slow descent following a pipe rupture.

14.4.2 Pipes

a) The pipes of hydraulic systems are to be installed in such a way as to ensure maximum protection while remaining readily accessible.

b) Pipes are to be installed at a sufficient distance from the vessel's shell. As far as possible, pipes should not pass through cargo spaces. The piping system is to be fitted with relief valves to limit the pressure to the maximum allowable working pressure.

c) Pipes are to be so installed that they are free from stress and vibration.

d) The piping system is to be fitted with filters for cleaning the hydraulic fluid.

e) Equipment is to be provided to enable the hydraulic system to be vented.

f) The hydraulic fluids must be suitable for the intended ambient and service temperatures.

g) Where the hydraulic system includes accumulators, the accumulator chamber must be permanently connected to the safety valve of the associated system. The gas chamber of the accumulators shall only be filled with inert gases. Gas and hydraulic fluid are to be separated by accumulator bags, diaphragms or similar devices.

14.4.3 Oil level indicators

Tanks within the hydraulic system are to be equipped with oil level indicators.

An alarm located in the wheelhouse is to fitted for the lowest permissible oil level.

14.4.4 Hose lines

Hose assemblies comprise hoses and their fittings in a fully assembled and tested condition.

High pressure hose assemblies are to be used if necessary for flexible connections. These hose assemblies must meet the requirements of [2.6] or an equivalent standard. The hose assemblies must be properly installed and suitable for the relevant operating media, pressures, temperatures and environmental conditions. In systems important to the safety of the vessel and in spaces subjected to a fire hazard, the hose assemblies are to be flame-resistant or to be protected correspondingly.

14.5 Testing in manufacturer's works

14.5.1 Testing of power units

The power units of hydraulic systems are required to undergo test on a test stand. The relevant works test certificates are to be presented at time to the final inspection of the hydraulic system.

For electric motors, see Ch 2, Sec 4.

Hydraulic pumps are to be subjected to pressure and operational tests in compliance with [20.4.6].

Tightness tests are to be performed on components to which this is appropriate.

15 Steam systems

15.1 Laying out of steam systems

15.1.1 Steam systems are to be so installed and supported that expected stresses due to thermal expansion, external loads and shifting of the supporting structure under both normal and interrupted service conditions will be safely compensated.

15.1.2 Steam lines are to be so installed that water pockets will be avoided.

15.1.3 Means are to be provided for the reliable drainage of the piping system.

15.1.4 Pipe penetrations through bulkheads and decks are to be insulated to prevent heat conduction.

15.1.5 Steam lines are to be effectively insulated to prevent heat losses.

At points where there is a possibility of contact, the surface temperature of the insulated steam systems may not exceed 80°C.

Wherever necessary, additional protection arrangements against unintended contact are to be provided.

The surface temperature of steam systems in the pump rooms of tankers may nowhere exceed 220°C.

It is to be ensured that the steam lines are fitted with sufficient expansion arrangements.

Where a system can be entered from a system with higher pressure, the former is to be provided with reducing valves and relief valves on the low pressure side.

Welded connections in steam systems are subject to the applicable requirements of NR216 Materials and Welding.

15.2 Steam strainers

15.2.1 Wherever necessary, machines and apparatus in steam systems are to be protected against foreign matter by steam strainers.

15.3 Steam connections

15.3.1 Steam connections to equipment and pipes carrying oil, e.g. steam atomizers or steam out arrangements, are to be so secured that fuel and oil cannot penetrate into the steam systems.

16 Boiler feedwater and circulating arrangement, condensate recirculation

16.1 Feed water pumps

16.1.1 At least two feedwater pumps are to be provided for each boiler installation.

16.1.2 Feedwater pumps are to be so arranged or equipped that no backflow of water can occur when the pumps are at a standstill.

16.1.3 Feedwater pumps are to be used only for feeding boilers.

16.2 Capacity of feed water pumps

16.2.1 Where two feedwater pumps are provided, the capacity of each is to be equivalent to at least 1,25 times the maximum permitted output of all the connected steam producers.

16.2.2 Where more than two feedwater pumps are installed, the capacity of all other feedwater pumps in the event of the failure of the pump with the largest capacity is to comply with the requirements of [16.2.1].

16.2.3 For continuous flow boilers the capacity of the feedwater pumps is to be at least 1,0 time the maximum steam output.

16.3 Delivery pressure of feedwater pumps

16.3.1 Feedwater pumps are to be so laid out that the delivery pressure can satisfy the following requirements:

- the required capacity according to [16.2]] is to be achieved against the maximum allowable working pressure of the steam producer
- the safety valves must have a capacity equal 1,0 times the approved steam output at 1,1 times the allowable working pressure.

The resistances to flow in the piping between the feedwater pump and the boiler are to be taken into consideration. In the case of continuous flow boilers the total resistance of the boiler must be taken into account.

16.4 Power supply to feedwater pumps

16.4.1 For electric drives, a separate lead from the common bus-bar to each pump motor is sufficient.

16.5 Feedwater systems

16.5.1 General

Feedwater systems may not pass through tanks which do not contain feedwater.

16.5.2 Feedwater systems for boilers

a) Each boiler is to be provided with a main and an auxiliary feedwater systems.

b) Each feedwater system is to be fitted with a shutoff valve and a check valve at the boiler inlet. Where the shutoff valve and the check valve are not directly connected in series, the intermediate pipe is to be fitted with a drain.

c) Each feedwater pump is to be fitted with a shutoff valve on the suction side and a screw-down non-return valve on the delivery side. The pipes are to be so arranged that each pump can supply each feedwater system.

d) Continuous flow boilers need not to be fitted with the valves required in item b) provided that the heating of the boiler is automatically switched off should the feedwater supply fail and that the feedwater pump supplies only one boiler.

16.6 Boiler water circulating systems

16.6.1 Each forced-circulation boiler is to be equipped with two circulating pumps powered independently of each other. Failure of the circulating pump in operation is to be signalled by an alarm. The alarm may only be switched off if a circulating pump is started or when the boiler firing is shut down.

16.6.2 The provision of only one circulating pump for each boiler is sufficient if:

- a common stand-by circulating pump is provided which can be connected to any boiler, or
- the burners of oil-fired auxiliary boilers are so arranged that they are automatically shut off should the circulating pump fail and the heat stored in the boiler does not cause any unacceptable evaporation of the water present in the boiler.

16.7 Condensate recirculation

16.7.1 The condensate of all heating systems used to heat oil (fuel, lubricating, cargo oil etc.) is to be led to condensate observation tanks. These tanks are to be fitted with air vents.

17 Compressed air systems

17.1 Application

17.1.1 This Article applies to compressed air systems intended for essential services, and in particular to:

- starting of engines
- control and monitoring.

17.2 Principle

17.2.1 General

a) As a rule, compressed air systems are to be so designed that the compressed air delivered to the consumers:
   - is free from oil and water, as necessary
   - does not have an excessive temperature.

b) Compressed air systems are to be so designed as to prevent overpressure in any part of the systems.

17.2.2 Availability

a) Compressed air systems are to be so designed that, in the event of failure of one air compressor or one air receiver intended for starting, control purposes or other essential services, the air supply to such services can be maintained. The filling connections of the compressed air receivers shall be fitted with a non-return valve.

b) The compressed air system for starting the main and auxiliary engines is to be arranged so that the necessary initial charge of starting air can be developed on board vessel without external aid. If, for this purpose, an emergency air compressor or an electric generator is required, these units are to be powered by a hand-starting oil engine or a hand-operated compressor.

c) Where compressed air is necessary to restore propulsion, the arrangements for bringing main and auxiliary machinery into operation are to have capacity such that the starting energy and any power supplies for engine operation are available within 30 minutes.

d) Where the compressed air is necessary for the air whistle or other safety services, it is to be available from two compressed air receivers. At least one of them is to be starting air receiver for main engines. The separate connection, dedicated for this purpose, is to be provided directly from the compressed air main.

17.3 Design of starting air systems

17.3.1 Air supply for starting the main and auxiliary engines

a) The total capacity of the compressed air available for starting purpose is to be sufficient to provide, without replenishment, not less than 12 consecutive starts alternating between ahead and astern of each main engine of the reversible type, and not less than 6 consecutive starts of each main non-reversible type engine connected to a controllable pitch propeller or other device enabling the start without opposite torque.

   The number of starts refers to the engine in cold and ready-to-start condition (all the driven equipment that cannot be disconnected is to be taken into account).

   A greater number of starts may be required when the engine is in warm running condition.

   At least 3 consecutive starts is to be possible for each engine driving electric generators and engines for other purposes. The capacity of a starting system serving two or more of the above specified purposes is to be the sum of the capacity requirements.

b) For multi-engine propulsion plants, the capacity of the starting air receivers is to be sufficient to ensure at least 3 consecutive starts per engine. However, the total capacity is not to be less than 12 starts and need not exceed 18 starts.

   Regardless of the above, for any other specific installation the number of starts may be specially considered by the Society and depending upon the arrangement of the engines and the transmission of their output to the propellers in each particular case.

17.3.2 Number and capacity of air compressors

a) Where main and auxiliary engines are arranged for starting by compressed air, two or more air compressors are to be fitted with a total capacity sufficient to supply within one hour the quantity of air needed to satisfy the provisions of [17.3.1] charging the receivers from atmospheric pressure. This capacity is to be approximately equally divided between the number of compressors fitted, excluding the emergency compressor fitted in pursuance of item c) below.

b) At least one of the compressors is to be independent of the engines for which starting air is supplied and is to have a capacity of not less than 50% of the total required in item a).

c) Where, for the purpose of [17.2.2], an emergency air compressor is fitted, this unit is to be power driven by internal combustion engine, electric motor or steam engine.

Suitable hand starting arrangement or independent electrical starting batteries may be accepted. In the case of small installations, a hand-operated compressor of approved capacity may be accepted.

17.3.3 Number and capacity of air receivers

a) Where main engines are arranged for starting by compressed air, at least two air receivers are to be fitted of approximately equal capacity and capable of being used independently.

b) The total capacity of air receivers is to be sufficient to provide without replenishment the number of starts required in [17.3.1]. When other users such as auxiliary engine starting systems, control systems, whistle, etc. are connected to the starting air receivers, their air consumption is also to be taken into account.

Compressed air receivers are to comply with the requirements of Ch 1, Sec 3.

17.4 Design of air compressors

17.4.1 Prevention of excessive temperature of discharged air

Air compressors are to be so designed that the temperature of discharged air cannot exceed 95°C. For this purpose, the air compressors are to provided where necessary with:

- suitable cooling means
- fusible plugs or alarm devices set at a temperature not exceeding 120°C.

17.4.2 Prevention of overpressure

a) Air compressors are to be fitted with a relief valve complying with [2.11].

b) Means are to be provided to prevent overpressure wherever water jackets or casings of air compressors may be subjected to dangerous overpressure due to leakage from air pressure parts.

c) Water space casings of intermediate coolers of air compressors are to be protected against any overpressure which might occur in the event of rupture of air cooler tubes.

17.4.3 Provision for draining

Air compressors are to be fitted with a drain valve.

17.5 Control and monitoring of compressed air systems

17.5.1 Monitoring

For diesel engines starting system, alarms and safeguards are to be provided for compressed air systems in accordance with Ch 3, Sec 2, Tab 1.

17.5.2 Automatic controls

Automatic pressure control is to be provided for maintaining the air pressure in the air receivers within the required limits.

17.6 Arrangement of compressed air piping systems

17.6.1 Prevention of overpressure

Suitable pressure relief arrangements are to be provided for all systems.

17.6.2 Air supply to compressors

a) Provisions are to be made to reduce to a minimum the entry of oil into air pressure systems.

b) Air compressors are to be located in spaces provided with sufficient ventilation.

17.6.3 Air treatment and draining

a) Provisions are be made to drain air pressure systems.

b) Efficient oil and water separators, or filters, are to be provided on the discharge of compressors, and drains are to be installed on compressed air pipes wherever deemed necessary.

17.6.4 Lines between compressors, receivers and engines

All discharge pipes from starting air compressors are to be lead directly to the starting air receivers, and all starting pipes from the air receivers to main or auxiliary engines are to be entirely separate from the compressor discharge pipe system.

17.6.5 Protective devices for starting air mains

Non-return valves and other safety devices are to be provided on the starting air mains of each engine in accordance with the provisions of Ch 1, Sec 2, [3.1.1].

18 Exhaust gas systems

18.1 General

18.1.1 Application

This Article applies to:

- exhaust gas pipes from engines
- smoke ducts from boilers.

18.1.2 Principle

Exhaust gas systems are to be so designed as to:

- limit the risk of fire
- prevent gases from entering manned spaces
- prevent water from entering engines.

18.2 Design of exhaust systems

18.2.1 Limitation of exhaust line surface temperature

a) Exhaust gas pipes and silencers are to be either water cooled or efficiently insulated where:

- their surface temperature may exceed 220°C, or
- they pass through spaces of the vessel where a temperature rise may be dangerous.

b) The insulation of exhaust systems is to comply with the provisions of Ch 1, Sec 1, [3.7.1].

18.2.2 Limitation of pressure losses

Exhaust gas systems are to be so designed that pressure losses in the exhaust lines do not exceed the maximum values permitted by the engine or boiler manufacturers.

18.2.3 Intercommunication of engine exhaust gas lines or boiler smoke ducts

a) Exhaust gas from different engines is not to be led to a common exhaust main, exhaust gas boiler or economiser, unless each exhaust pipe is provided with a suitable isolating device.

b) Smoke ducts from boilers discharging to a common funnel are to be separated to a height sufficient to prevent smoke passing from a boiler which is operating to a boiler out of action.

18.2.4 Boilers designed for alternative oil firing and exhaust gas operation

Where boilers are designed for alternative oil firing and exhaust gas operation, the exhaust gas pipe from the engine is to be fitted with an isolating device and safety arrangements to prevent the starting of the fuel oil burning units if the isolating device is not in the closed position.

18.2.5 Exhaust gas pipe terminations

a) Where exhaust pipes are led overboard close to the load waterline, means are to be provided to prevent water from entering the engine or the vessel.

b) Where exhaust pipes are water cooled, they are to be so arranged as to be self-draining overboard.

18.2.6 Control and monitoring

A high temperature alarm is to be provided in the exhaust gas manifolds of thermal oil heaters to detect any outbreak of fire.

18.3 Arrangement of exhaust piping systems

18.3.1 Provision for thermal expansion

a) Exhaust pipes and smoke ducts are to be so designed that any expansion or contraction does not cause abnormal stresses in the piping system, and in particular in the connection with engine turboblowers.

b) The devices used for supporting the pipes are to allow their expansion or contraction.

18.3.2 Provision for draining

a) Drains are to be provided where necessary in exhaust systems, and in particular in exhaust ducting below exhaust gas boilers, in order to prevent water flowing into the engine.

b) Where exhaust pipes are water cooled, they are to be so arranged as to be self-draining overboard.

18.3.3 Silencers

Engine silencers are to be so arranged as to provide easy access for cleaning and overhaul.

19 Bilge systems for non propelled vessels

19.1 Bilge system in vessels having no source of electrical power

19.1.1 General

Where there is no source of electrical power on board, hand pumps are to be provided, in sufficient number and so positioned as to permit an adequate drainage of all the compartments of the vessel.

19.1.2 Arrangement of the bilge system

The bilge system is to comply with one of the following arrangements:

a) at least one pump is provided for each compartment

b) at least two pumps connected to a bilge main are to be provided. The main is to have branch pipes allowing the draining of each compartment through at least one suction.

19.1.3 Hand pumps

a) Hand pumps are to be capable of being operated from positions above the load waterline and are to be readily accessible at any time.

b) Hand pump suction lift is to be well within the capacity of the pump.

19.1.4 Size of bilge pipes

The size of bilge pipes is to be determined in compliance with [6.8].

19.2 Bilge system in vessels having a source of electrical power

19.2.1 General

On board non propelled vessels having a source of electrical power, mechanical pumps are to be provided for draining the various compartments of the vessel.

The Society may waive the requirements of this sub-article for vessels not intended to carry passengers complying with [19.1].

19.2.2 Arrangement of the bilge system

The bilge system is to comply with the provisions of [6.3] to [6.6] applicable to the spaces concerned, except that direct suction need not be provided.

19.2.3 Bilge pumps

The number and capacity of the bilge pumps are to comply with the relevant requirements of [6.7].

19.2.4 Size of bilge pipes

The size of bilge pipes is to comply with the relevant requirements of [6.8].

20 Certification, inspection and testing of piping systems

20.1 Application

20.1.1 This Article defines the certification and workshop inspection and testing programme to be performed on:

- the various components of piping systems
- the materials used for their manufacture.

On board testing is dealt with in Ch 1, Sec 15.

20.2 Type tests

20.2.1 Type tests of flexible hoses and expansion joints

a) For the flexible hoses or expansion joints which are to comply with [2.6], relevant type approval tests are to be carried out on each type and each size.

b) The flexible hose or an expansion joint subjected to the tests is to be fitted with their connections.

c) Type approval tests are to be carried out in accordance with applicable requirements of NR467, Pt C, Ch 1, Sec 10.

d) All flexible hose assemblies or expansion joints are to be satisfactorily prototype burst tested to an international standard (see Note 1) to demonstrate that they are able to withstand a pressure not less than 4 times their design pressure without indication of failure or leakage.

Note 1: The international standards (e.g. EN or SAE standards) for burst testing of non-metallic hoses require the pressure to be increased until burst without any holding period. Burst is to occur at a pressure greater than 4 times the maximum working pressure.

20.3 Testing of materials

20.3.1 The proof of the quality of materials for pipe class II is to be in the form of an inspection certificate. For this purpose, the manufacturer of the material must have been accepted by the Society.

20.3.2 For components in pipe class III, a works certificate issued by the manufacturer of the material according to EN 10204 3.1 or equivalent is sufficient.

20.3.3 Welded joints in pipelines of class II are to be tested in accordance with NR216 Materials and Welding.

20.4 Hydrostatic testing of piping systems and their components

20.4.1 General

Pneumatic tests are to be avoided wherever possible. Where such testing is absolutely necessary in lieu of the hydraulic pressure test, the relevant procedure is to be submitted to the Society for acceptance prior to testing.

20.4.2 Pressure tests of piping before assembly on board

All class II pipes as well as steam lines, feedwater pressure pipes, compressed air and fuel lines having a design pressure PR greater than 3,5 bar together with their associated fittings, connecting pieces, branches and bends, after completion of manufacture but before insulation and coating, if this is provided, shall be subjected to a hydraulic pressure test in the presence of the Surveyor at the following value of pressure:

$p_p = 1,5\ p_C$

where:

p_C : Design pressure defined in [2.4.1].

Where for technical reasons it is not possible to carry out complete hydraulic pressure tests on all sections of piping before assembly on board, proposals are to be submitted for approval to the Society for testing the closing lengths of piping, particularly in respect of closing seams.

When the hydraulic pressure test of piping is carried out on board, these tests may be conducted in conjunction with the tests required under [20.4.3].

Pressure testing of pipes with a nominal diameter less than 15 mm may be omitted at the Society's discretion depending on the application.

20.4.3 Pressure tests of piping after assembly on board

In general, all pipe systems are to be tested for leakage under operational conditions. If necessary, special techniques other than hydraulic pressure tests are to be applied. In particular the following applies:

- heating coils in tanks and fuel lines must be tested to not less than 1,5 PB but in no case less than 4 bar
- liquefied gas process piping systems are to be leak tested (by air, halides, etc.) to a pressure depending on the leak detection method applied.

20.4.4 Hydrostatic tests of valves

The following valves are to be subjected in the manufacturer's works to a hydraulic pressure test in the presence of a Society Surveyor:

a) valves of pipe class II to 1,5 PR

b) valves mounted on the vessel's side not less than 5 bar.

The valves specified under items a) and b) shall also undergo a tightness test at 1,0 times the nominal pressure.

For the valves of steam boilers, see Ch 1, Sec 3, [3.2].

20.4.5 Hydrostatic tests of fuel oil bunkers and tanks not forming part of the vessel’s structure

Fuel oil bunkers and tanks not forming part of the vessel’s structure are to be subjected to a hydrostatic test in compliance with Pt B, Ch 8, Sec 4.

20.4.6 Hydrostatic tests of pumps and compressors

Cylinders, covers and casings of pumps and compressors are to be subjected to a hydrostatic test under a pressure at least equal to the test pressure p_p, in bar determined by the following formulae:

- $p_p = 1,5\ p_{e,zul}$ where $p_{e,zul} \leq 200$
- $p_p = p_{e,zul} + 100$ where $p_{e,zul} > 200$

where:

$p_{e,zul}$: Maximum allowable working pressure, in bar, as defined in [1.3.2].

Tightness tests are to be performed on components to which this is appropriate.

20.4.7 Hydrostatic test of flexible hoses and expansion joints

Hose assemblies and compensators are to be subjected in the manufacturer's works to a pressure test in accordance with [2.6.2] under the supervision of the Society.

20.5 Testing of piping system components during manufacturing

20.5.1 Pumps

Bilge and fire pumps are to undergo a performance test.

20.6 Inspection and testing of piping systems

20.6.1 The inspections and tests required for piping systems and their components are summarized in Tab 20.

Table 20 : Inspection and testing at works for piping systems and their components

Item **(1)**		Tests for the materials **(2)**		Inspections and tests for the product **(2)**		
		Tests required **(3)**	Type of material certificate **(4)**	During manufacturing (NDT)	After completion	Type of product certificate **(4)**
Raw pipes	class II	[20.3]	C **(5)**	[3] **(6)**	[20.4.2] [20.4.3]	C **(5)**
	class III		W			W
Valves and fittings	class II	[20.3]	C **(5)**	[3] **(6)**	[20.4.4]	C **(5)**
	class III, ND > 100		C **(5)**			C **(5)**
	class III, ND ≤ 100		W			W
Flexible hoses and expansion joints		[20.3]	C **(5)**		[20.4.7]	C **(5)**
Pumps and compressors within piping systems covered by Sections of Part C, Chapter 1 **(7)**	when belonging to a class II piping system	[20.3]	W		[20.4.6]	C **(5)**
	bilge and fire pump	[20.3]	W			C **(5)**
	feed pumps for main boilers	[20.3]	C **(5)**	[3] **(6)** **(8)**		C **(5)**
	forced circulation pumps for main boilers	[20.3]	C **(5)**			C **(5)**
	when belonging to one of the following class III piping systems if design pressure exceeds 3,5 bar: • boiler feed water or forced circulating • fuel oil or other flammable oil • compressed air	[20.3]	W			C **(5)**
	when belonging to other class III piping systems					W

(1) ND = Nominal diameter of the pipe, valve or fitting, in mm.
Class of pipping systems is to be determined in accordance with [1.4].

(2) [x.y.z] = test required, as per referent regulation. In general, the material are to comply with [2.2]

(3) where required by the table, material tests are to be carried out for the components subject to pressure, such as valve body, pump and compressor casings, etc. They are also to be carried out for the assembling bolts of feed water pumps and forced circulating pumps serving main boilers. Requirements for material testing are detailed in NR216 Materials and Welding, Ch 2, Sec 2.

(4) C = class inspection certificate ; W = works' certificate.

(5) or alternative type of certificate, depending on the Survey Scheme.

(6) if of welded construction.

(7) for other pumps and compressors, see additional Rules relevant for related system.

(8) for main parts, before assembling.

SECTION 11 STEERING GEAR

1 General

1.1 Application

1.1.1 Scope

Unless otherwise specified, the requirements of this Section apply to the steering gear systems of all mechanically propelled vessels, and to the steering mechanism of thrusters used as means of propulsion.

1.1.2 Cross references

In addition to the those provided in this Section, steering gear systems are also to comply with the requirements of:

- Ch 1, Sec 15, as regards tests on board
- Pt B, Ch 7, Sec 1, as regards the rudder and the rudder stock.

1.2 Documentation to be submitted

1.2.1 Documents to be submitted for all steering gear

Before starting construction, all plans and specifications listed in Tab 1 are to be submitted to the Society for review.

1.3 Definitions

1.3.1 Steering system

Steering system means vessels's directional control system, including main steering gear, auxiliary steering gear, steering gear control system and rudder if any.

Table 1 : Documents to be submitted for steering gear

Item No	Status of the review **(1)**	Description of the document **(2)**
1	I	Assembly drawing of the steering gear including sliding blocks, guides, stops and other similar components
2	I	General description of the installation and of its functioning principle
3	I	Operating manuals of the steering gear and of its main components
4	I	Description of the operational modes intended for steering in normal and emergency conditions
5	A	For hydraulic steering gear, the schematic layout of the hydraulic piping of power actuating systems, including the hydraulic fluid refilling system, with indication of: • the design pressure • the maximum working pressure expected in service • the diameter, thickness, material specification and connection details of the pipes • the hydraulic fluid tank capacity • the flashpoint of the hydraulic fluid
6	I	For hydraulic pumps of power units, the assembly longitudinal and transverse sectional drawings and the characteristic curves
7	A	Assembly drawings of the rudder actuators and constructional drawings of their components, with, for hydraulic actuators, indication of: • the design torque • the maximum working pressure • the relief valve setting pressure
8	I	Constructional drawings of the relief valves for protection of the hydraulic actuators, with indication of: • the setting pressure • the relieving capacity
9	A	Diagrams of the electric power circuits
10	A	Functional diagram of control, monitoring and safety systems including the remote control from the navigating bridge, with indication of the location of control, monitoring and safety devices
11	A	Constructional drawings of the strength parts providing a mechanical transmission of forces to the rudder stock (tiller, quadrant, connecting rods and other similar items), with the calculation notes of the shrink-fit connections
12	I/A	For azimuth thrusters used as steering means, the specification and drawings of the steering mechanism and, where applicable, documents 2 to 6 and 8 to 11 above

(1) Submission of the drawings may be requested:
for review, shown as "A"; for information, shown as "I".

(2) Constructional drawings are to be accompanied by the specification of the materials employed and, where applicable, by the welding details and welding procedures.

1.3.2 Steering gear control system

Steering gear control system is the equipment by which orders are transmitted from the navigation bridge to the steering gear power units. Steering gear control systems comprise transmitters, receivers, hydraulic control pumps and their associated motors, motor controllers, piping and cables.

1.3.3 Main steering gear

Main steering gear is the machinery, rudder actuators, steering gear power units, if any, and ancillary equipment and the means of applying torque to the rudder stock (e.g. tiller or quadrant) necessary for effecting movement of the rudder for the purpose of steering the vessel under normal service conditions.

1.3.4 Steering gear power unit

Steering gear power unit is:

- in the case of electric steering gear, an electric motor and its associated electrical equipment
- in the case of electrohydraulic steering gear, an electric motor and its associated electrical equipment and connected pump
- in the case of other hydraulic steering gear, a driving engine and connected pump.

1.3.5 Auxiliary steering gear

Auxiliary steering gear is the equipment other than any part of the main steering gear necessary to steer the vessel in the event of failure of the main steering gear but not including the tiller, quadrant or components serving the same purpose.

1.3.6 Power actuating system

Power actuating system is the hydraulic equipment provided for supplying power to turn the rudder stock, comprising a steering gear power unit or units, together with the associated pipes and fittings, and a rudder actuator. The power actuating systems may share common mechanical components, i.e. tiller, quadrant and rudder stock, or components serving the same purpose.

1.3.7 Rudder actuator

Rudder actuator is the component which directly converts hydraulic pressure into mechanical action to move the rudder.

1.3.8 Maximum ahead service speed

Maximum ahead service speed is the greatest speed which the vessel is designed to maintain in service at the deepest draught.

1.3.9 Maximum astern speed

Maximum astern speed is the speed which it is estimated the vessel can attain at the designed maximum astern power at the deepest draught.

1.3.10 Maximum working pressure

Maximum working pressure is the maximum expected pressure in the system when the steering gear is operated to comply with the provisions of [2.2.1] item b).

1.4 Symbols

1.4.1 The following symbols are used for strength criteria of steering gear components:

V : Maximum ahead service speed, in km/h, with the vessel on maximum load waterline; this value is not to be taken less than 8 km/h

d_s : Rule diameter of the rudder stock in way of the tiller, in mm, defined in Pt B, Ch 7, Sec 1, [3.1.2] and calculated with a material factor $k_1 = 1$. For conical coupling, d_s is to be taken as specified in Fig 1

d_{se} : Actual diameter of the upper part of the rudder stock in way of the tiller, in mm (in the case of a tapered coupling, this diameter is measured at the base of the assembly)

T_R : Rule design torque of the rudder stock given, in kN.m, by the following formula:

$$T_R = 13,5 \cdot d_s^3 \cdot 10^{-6}$$

T_E : For hand emergency operation, design torque due to forces induced by the rudder, in kN.m, given by the following formula:

$$T_E = 0,62 \cdot \left(\frac{V_E + 3,704}{V + 3,704}\right)^2 \cdot T_R$$

where:

$V_E = 0,5\ V$

T_G : For main hydraulic or electrohydraulic steering gear, torque induced by the main steering gear on the rudder stock when the pressure is equal to the setting pressure of the relief valves protecting the rudder actuators

Note 1: For hand-operated main steering gear, the following value is to be used: $T_G = 1,25\ T_R$

T_A : For auxiliary hydraulic or electrohydraulic steering gears, torque induced by the auxiliary steering gear on the rudder stock when the pressure is equal to the setting pressure of the relief valves protecting the rudder actuators

Note 2: For hand-operated auxiliary steering gear, the following value is to be used: $T_A = 1,25\ T_E$

T'_G : For steering gear which can activate the rudder with a reduced number of actuators, the value of T_G in such conditions

Figure 1 : Boss dimensions

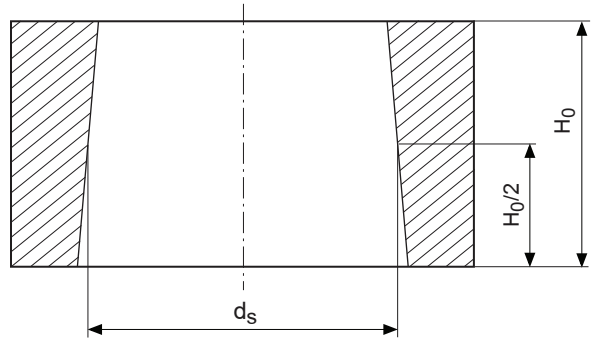

σ : Normal stress due to the bending moments and the tensile and compressive forces, in N/mm^2

τ : Tangential stress due to the torsional moment and the shear forces, in N/mm^2

σ_a : Permissible stress, in N/mm^2

σ_c : Combined stress, determined by the following formula:

$$\sigma_c = \sqrt{\sigma^2 + 3\tau^2}$$

R : Value of the minimum specified tensile strength of the material at ambient temperature, in N/mm^2

R_e : Value of the minimum specified yield strength of the material at ambient temperature, in N/mm^2

R'_e : Design yield strength, in N/mm^2, determined by the following formulae:

- where $R \geq 1,4\ R_e$: $R'_e = R_e$
- where $R < 1,4\ R_e$: $R'_e = 0,417\ (R_e + R)$

2 Design and construction

2.1 General

2.1.1 Unless expressly provided otherwise, every vessel is to be provided with main steering gear and auxiliary steering gear to the satisfaction of the Society.

Each steering gear must be able to operate the rudder for its own and independent of the other. The Society may agree to components being used jointly by the main and auxiliary steering gear.

2.2 Strength, performance and power operation of the steering gear

2.2.1 Main steering gear

The main steering gear and rudder stock are to be:

a) of adequate strength and capable of steering the vessel at maximum ahead service speed, which is to be demonstrated

b) capable of putting the rudder over from 35° on one side to 35° on the other side with the vessel at its deepest draught and running ahead at maximum ahead service speed and, under the same conditions, from 35° on either side to 35° on the other side in not more than 28 seconds

c) operated by power where necessary to fulfil the requirements of item b), and

d) so designed that they will not be damaged at maximum astern speed; however, this design requirement need not be proved by trials at maximum astern speed and maximum rudder angle.

2.2.2 Auxiliary steering gear

The auxiliary steering gear is to be:

a) of adequate strength and sufficient to steer the vessel at navigable speed and capable of being brought speedily into action in an emergency

b) operated by power where necessary to meet the requirements of item a).

2.2.3 Hand operation

Manual operation is acceptable for rudder stock diameters up to 150 mm calculated for torsional loads in accordance with Pt B, Ch 7, Sec 1, [3.1.2].

Not more than 30 turns of the handwheel shall be necessary to put the rudder from one hard over position to the other. Taking account of the efficiency of the system, the force required to operate the handwheel should generally not exceed 200 N.

2.3 Control of the steering gear

2.3.1 Control of the main steering gear

a) Control of the main steering gear is to be provided on the wheelhouse.

b) Where the main steering gear is arranged in accordance with [2.4.2], two independent control systems are to be provided, both operable from the wheelhouse. This does not require duplication of the steering wheel or steering lever.

2.3.2 Control of the auxiliary steering gear

a) Control of the auxiliary steering gear is to be provided on the wheelhouse, in the steering gear compartment or in another suitable position.

b) If the auxiliary steering gear is power operated, its control system is also to be independent of that of the main steering gear.

2.4 Availability

2.4.1 Arrangement of main and auxiliary means for actuating the rudder

The main steering gear and the auxiliary means for actuating the rudder are to be arranged so that a single failure in one will not render the other inoperative.

2.4.2 Omission of the auxiliary steering gear

Where the main steering gear comprises two or more identical power units, auxiliary steering gear need not be fitted, provided that the main steering gear is capable of operating the rudder:

a) as required in [2.2.1], item b), while operating with all power units

b) as required in [2.2.2], item a), while any one of the power units is out of operation.

2.4.3 Hydraulic power supply

Hydraulic power installations supplying steering gear may also supply other equipment at the same time provided that the operation of the steering gear is not affected by:

a) the operation of this equipment, or

b) any failure of this equipment or of its hydraulic supply piping.

2.5 Mechanical components

2.5.1 General

a) All steering gear components and the rudder stock are to be of sound and reliable construction to the satisfaction of the Society.

b) Any non-duplicated essential component is, where appropriate, to utilise anti-friction bearings, such as ball bearings, roller bearings or sleeve bearings, which are to be permanently lubricated or provided with lubrication fittings.

c) The construction is to be such as to minimise local concentration of stress.

d) All steering gear components transmitting mechanical forces to the rudder stock, which are not protected against overload by structural rudder stops or mechanical buffers, are to have a strength at least equivalent to that of the rudder stock in way of the tiller.

2.5.2 Materials and welds

a) All steering gear components transmitting mechanical forces to the rudder stock (such as tillers, quadrants, or similar components) are to be of steel or other approved ductile material complying with the requirements of NR216 Materials and Welding. In general, such material is to have an elongation of not less than 12% and a tensile strength not greater than 650 N/mm^2.

b) The use of grey cast iron is not permitted, except for redundant parts with low stress level, subject to special consideration by the Society. It is not permitted for cylinders.

c) The welding details and welding procedures are to be submitted for review/approval.

d) All welded joints within the pressure boundary of a rudder actuator or connecting parts transmitting mechanical loads are to be of full penetration type or of equivalent strength.

2.5.3 Scantling of components

The scantling of steering gear components is to be determined considering the design torque M_T and the permissible value σ_a of the combined stress, as given in:

- Tab 2 for components which are protected against overloads induced by the rudder
- Tab 3 for components which are not protected against overloads induced by the rudder.

Table 2 : Scantling of components protected against overloads induced by the rudder

Conditions of use of the components	M_T	σ_a
Normal operation	T_G	• if $T_G \le 1{,}25\ T_R$: $\sigma_a = 1{,}25\ \sigma_0$ • if $1{,}25\ T_R < T_G < 1{,}50\ T_R$: $\sigma_a = \sigma_0\ T_G/T_R$ • if $T_G \ge 1{,}50\ T_R$: $\sigma_a = 1{,}50\ \sigma_0$ where $\sigma_0 = 0{,}55\ R'_e$
Normal operation, with a reduced number of actuators	T'_G	• if $T'_G \le 1{,}25\ T_R$: $\sigma_a = 1{,}25\ \sigma_0$ • if $1{,}25\ T_R < T'_G < 1{,}50\ T_R$: $\sigma_a = \sigma_0\ T_G/T_R$ • if $T'_G \ge 1{,}50\ T_R$: $\sigma_a = 1{,}50\ \sigma_0$ where $\sigma_0 = 0{,}55\ R'_e$
Emergency operation achieved by hydraulic or electrohydraulic steering gear	min (T_R ; 0,8 T_A)	0,69 R'_e
Emergency operation, with a reduced number of actuators	min (T_R ; 0,8 T'_G)	0,69 R'_e
Emergency operation achieved by hand	T_E	0,69 R'_e

Table 3 : Scantling of components not protected against overloads induced by the rudder

Conditions of use of the components	M_T	σ_a
Normal operation	T_R	0,55 R'_e
Normal operation, with a reduced number of actuators	min (T_R ; 0,8 T'_G)	0,55 R'_e
Emergency operation achieved by hydraulic or electrohydraulic steering gear	min (T_R ; 0,8 T_A)	0,69 R'_e
Emergency operation, with a reduced number of actuators	min (T_R ; 0,8 T'_G)	0,69 R'_e
Emergency operation achieved by hand	T_E	0,69 R'_e

2.5.4 Tillers, quadrants and rotors

a) The scantling of the tiller is to be determined as follows:

- the depth H_0 of the boss is not to be less than $0,75\ d_s$
- the radial thickness of the boss in way of the tiller is not to be less than the greater of:

$$0,3 \cdot d_s \cdot \sqrt{\frac{235}{R'_e}}$$

$$0,25 \cdot d_s$$

- the section modulus of the tiller arm in way of the end fixed to the boss is not to be less than the value Z_b, in cm^3, calculated from the following formula:

$$Z_b = \frac{0,147 \cdot d_s^3}{1000} \cdot \frac{L'}{L} \cdot \frac{R_e}{R'_e}$$

where:

L : Distance from the centreline of the rudder stock to the point of application of the load on the tiller (see Fig 2)

L′ : Distance between the point of application of the above load and the root section of the tiller arm under consideration (see Fig 2)

- the width and thickness of the tiller arm in way of the point of application of the load are not to be less than one half of those required by the above formula
- in the case of double arm tillers, the section modulus of each arm is not to be less than one half of the section modulus required by the above formula.

b) The scantling of the quadrants is to be determined as specified in a) for the tillers. When quadrants having two or three arms are provided, the section modulus of each arm is not to be less than one half or one third, respectively, of the section modulus required for the tiller.

Arms of loose quadrants not keyed to the rudder stock may be of reduced dimensions to the satisfaction of the Society, and the depth of the boss may be reduced by 10%.

Figure 2 : Tiller arm

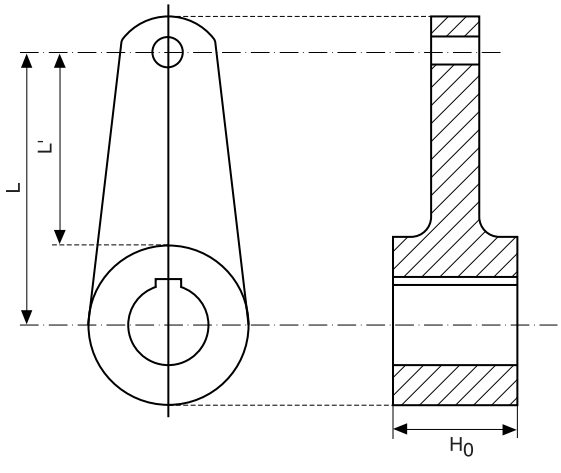

c) Keys are to satisfy the following provisions:

- the key is to be made of steel with a yield stress not less than that of the rudder stock and that of the tiller boss or rotor without being less than 235 N/mm^2
- the width of the key is not to be less than $0,25\ d_S$
- the thickness of the key is not to be less than $0,10\ d_S$
- the ends of the keyways in the rudder stock and in the tiller (or rotor) are to be rounded and the keyway root fillets are to be provided with small radii of not less than 5% of the key thickness.

d) Bolted tillers and quadrants are to satisfy the following provisions:

- the diameter of the bolts is not to be less than the value d_b, in mm, calculated from the following formula:

$$d_b = 153 \sqrt{\frac{T_R}{n(b + 0,5 d_{se})} \cdot \frac{235}{R_{eb}}}$$

where:

n : Number of bolts located on the same side in respect of the stock axis (n is not to be less than 2)

b : Distance between bolts and stock axis, in mm (see Fig 3)

R_{eb} : Yield stress, in N/mm^2, of the bolt material

- the thickness of each of the tightening flanges of the two parts of the tiller is not to be less than the following value:

$$1,85 \cdot d_b \cdot \sqrt{\frac{n \cdot (b - 0,5 \cdot D_e)}{H_0} \cdot \frac{R_{eb}}{R'_e}}$$

where:

D_e : External boss diameter, in mm (average value)

- in order to ensure the efficient tightening of the coupling around the stock, the two parts of the tiller are to bored together with a shim having a thickness not less than the value j, in mm, calculated from the following formula:

$j = 0,0015\ d_S$

Figure 3 : Bolted tillers

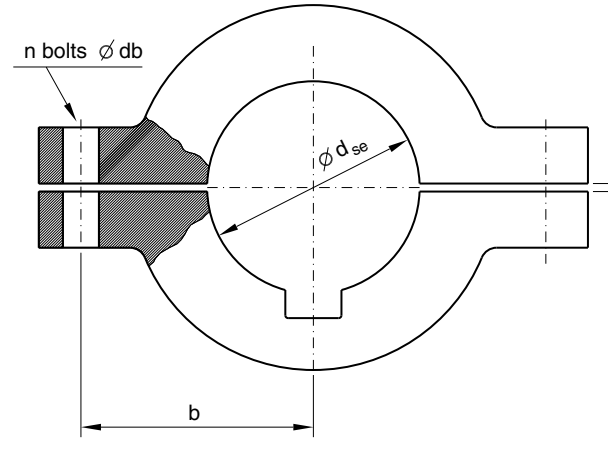

e) Shrink-fit connections of tiller (or rotor) to stock are to satisfy the following provisions:

- the safety factor against slippage is not to be less than:
  - for keyed connections: 1
  - for keyless connections: 2
- the friction coefficient is to be taken equal to:
  - in the case of hydraulic fitting: 0,15 for steel and 0,13 for spheroidal graphite cast iron
  - in the case of dry shrink fitting: 0,17
- the combined stress according to the von Mises criterion, due to the maximum pressure induced by the shrink fitting and calculated in way of the most stressed points of the shrunk parts, is not to exceed 80% of the yield stress of the material considered

Note 1: Alternative stress values based on FEM calculations may also be considered by the Society.

- the entrance edge of the tiller bore and that of the rudder stock cone are to be rounded or bevelled.

2.5.5 Piston rods

The scantling of the piston rod is to be determined taking into account the bending moments, if any, in addition to compressive or traction forces and is to satisfy the following provisions:

a) $\sigma_C \leq \sigma_a$

where:

σ_C : Combined stress as per [1.4.1]

σ_a : Permissible stress as per [2.5.3]

b) In respect of the buckling strength:

$$\frac{4}{\pi D_2^2} \cdot \left(\omega F_c + \frac{8M}{D_2}\right) \leq 0,9\sigma_a$$

where:

D_2 : Piston rod diameter, in mm

F_C : Compression force in the rod, in N, when it extends to its maximum stroke

M : Possible bending moment in the piston rod, in N.mm, in way of the fore end of the cylinder rod bearing

$\omega = \beta + (\beta^2 - \alpha)^{0,5}$

with:

$$\alpha = 0,0072\left(\frac{\ell_s}{D_2}\right)^2 \frac{R_e'}{235}$$

$\beta = 0,48 + 0,5\ \alpha + 0,1\ \alpha^{0,5}$

ℓ_s : Length, in mm, of the maximum unsupported reach of the cylinder rod.

2.6 Hydraulic system

2.6.1 General

a) The design pressure for calculations to determine the scantlings of piping and other steering gear components subjected to internal hydraulic pressure shall be at least 1,25 times the maximum working pressure to be expected under the operational conditions considered, taking into account any pressure which may exist in the low pressure side of the system.

b) The power piping for hydraulic steering gear is to be arranged so that transfer between units can be readily effected.

c) Arrangements for bleeding air from the hydraulic system are to be provided, where necessary.

d) The hydraulic piping system, including joints, valves, flanges and other fittings, is to comply with the requirements of Ch 1, Sec 10, [14], unless otherwise stated.

2.6.2 Materials

a) Ram cylinders, pressure housings of rotary vane type actuators, hydraulic power piping, valves, flanges and fittings are to be of steel or other approved ductile material.

b) In general, such material is to have an elongation of not less than 12% and a tensile strength not greater than 650 N/mm^2.

Grey cast iron may be accepted for valve bodies and redundant parts with low stress level, excluding cylinders, subject to special consideration.

2.6.3 Isolating valves

Shut-off valves, non-return valves or other appropriate devices are to be provided to:

- comply with the availability requirements of [2.4]
- keep the rudder steady in position in case of emergency.

In particular, for all vessels with non-duplicated actuators, isolating valves are to be fitted at the connection of pipes to the actuator, and are to be directly fitted on the actuator.

2.6.4 Flexible hoses

a) Flexible hoses may be installed between two points where flexibility is required but are not to be subjected to torsional deflection (twisting) under normal operation. In general, the hose is to be limited to the length necessary to provide for flexibility and for proper operation of machinery.

b) Hoses are to be high pressure hydraulic hoses according to recognised standards and suitable for the fluids, pressures, temperatures and ambient conditions in question.

c) They are to be of a type approved by the Society.

d) The burst pressure of hoses is to be not less than four times the design pressure.

2.6.5 Relief valves

a) Relief valves shall be fitted to any part of the hydraulic system which can be isolated and in which pressure can be generated from the power source or from external forces. The setting of the relief valves shall not exceed the design pressure. The valves shall be of adequate size and so arranged as to avoid an undue rise in pressure above the design pressure.

b) The setting pressure of the relief valves is not to be less than 1,25 times the maximum working pressure.

c) The minimum discharge capacity of the relief valve(s) is not to be less than the total capacity of the pumps which can deliver through it (them), increased by 10%. Under such conditions, the rise in pressure is not to exceed 10% of the setting pressure. In this respect, due consideration is to be given to the foreseen extreme ambient conditions in relation to oil viscosity.

2.6.6 Hydraulic oil reservoirs

Hydraulic power-operated steering gear shall be provided with a low level alarm for each hydraulic fluid reservoir to give the earliest practicable indication of hydraulic fluid leakage. Audible and visual alarms shall be given on the wheelhouse and in the machinery space where they can be readily observed.

2.6.7 Hydraulic pumps

a) Hydraulic pumps are to be type tested in accordance with the provisions of [6.1.1].

b) Special care is to be given to the alignment of the pump and the driving motor.

2.6.8 Filters

a) Hydraulic power-operated steering gear shall be provided with arrangements to maintain the cleanliness of the hydraulic fluid taking into consideration the type and design of the hydraulic system.

b) Filters of appropriate mesh fineness are to be provided in the piping system, in particular to ensure the protection of the pumps

2.7 Electrical systems

2.7.1 General

For electrical systems of the main steering gear and the auxiliary steering gear, see Ch 2, Sec 10, [1] and Ch 2, Sec 10, [2].

2.8 Alarms and indications

2.8.1 For alarms and indications, see Ch 3, Sec 2.

3 Design and construction - Requirements for vessels equipped with several rudders

3.1 Principle

3.1.1 General

In addition to the provisions of Article [2], vessels equipped with two or more aft rudders are to comply with the provisions of the present Article.

3.1.2 Availability

Where the vessel is fitted with two or more rudders, each having its own actuation system, the latter need not be duplicated.

3.1.3 Equivalent rudder stock diameter

Where the rudders are served by a common actuating system, the diameter of the rudder stock referred to in [2.2.1] is to be replaced by the equivalent diameter d obtained from the following formula:

$$d = \sqrt[3]{\sum_j d_j^3}$$

with:

d_j : Rule diameter of the upper part of the rudder stock of each rudder in way of the tiller, excluding strengthening for navigation in ice.

3.2 Synchronisation

3.2.1 General

A system for synchronising the movement of the rudders is to be fitted by, either:

- a mechanical coupling, or
- other systems giving automatic synchronising adjustment.

3.2.2 Non-mechanical synchronisation

Where the synchronisation of the rudder motion is not achieved by a mechanical coupling, the following provisions are to be met:

a) the angular position of each rudder is to be indicated in the wheelhouse

b) the rudder angle indicators are to be independent from each other and, in particular, from the synchronising system

c) in case of failure of the synchronising system, means are to be provided for disconnecting this system so that steering capability can be maintained or rapidly regained.

4 Design and construction - Requirements for vessels equipped with alternative propulsion and steering systems without rudder

4.1 Principle

4.1.1 General

For vessels with alternative propulsion and steering systems such as:

- azimuth thrusters
- water-jets
- cycloidal propellers,

the provisions of this Article are to be applied in addition to those of Ch 1, Sec 12.

4.1.2 Actuation system

Thrusters used as steering means are to be fitted with a main actuation system and an auxiliary actuation system.

4.1.3 Control system

Where the steering means of the vessel consists of two or more thrusters, their control system is to include a device ensuring an automatic synchronisation of the thruster rotation, unless each thruster is so designed as to withstand any additional forces resulting from the thrust exerted by the other thrusters.

4.2 Use of azimuth thrusters

4.2.1 Azimuth thrusters used as sole steering means

Where the vessel is fitted with one azimuth thruster used as the sole steering means, this thruster is to comply with [2.2.1], except that:

a) the main actuation system is required to be capable of a rotational speed of at least 0,4 RPM and to be operated by power where the expected steering torque exceeds 1,5 kN·m

b) the auxiliary actuation system is required to be capable of a rotational speed of at least 0,1 RPM and to be operated by power where the expected steering torque exceeds 3 kN·m.

4.2.2 Azimuth thrusters used as auxiliary steering gear

Where the auxiliary steering gear referred to in [2.2.2] consists of one or more azimuth thrusters, at least one such thruster is to be capable of:

- steering the vessel at maximum ahead service speed
- being brought speedily into action in case of emergency
- having a rotational speed of at least 0,4 RPM.

The auxiliary actuation system referred to in [4.1.2] need not be fitted.

4.2.3 Omission of the auxiliary actuation system

Where the steering means of the vessel consists of two independent azimuth thrusters or more, the auxiliary actuation system referred to in [4.1.2] need not be fitted provided that:

- the thrusters are so designed that the vessel can be steered with any one out of operation
- the actuation system of each thruster complies with [4.2.1], item b).

4.3 Use of water-jets

4.3.1 The use of water-jets as steering means will be given special consideration by the Society.

5 Arrangement and installation

5.1 General

5.1.1 The steering gear are to be so installed that they are accessible at all times and can be maintained without difficulty.

5.2 Rudder actuator installation

5.2.1

a) Rudder actuators are to be installed on foundations of strong construction so designed as to allow the transmission to the vessel structure of the forces resulting from the torque applied by the rudder and/or by the actuator, considering the strength criteria defined in [2.5.3] and [5.3.1]. The structure of the vessel in way of the foundations is to be suitably strengthened.

b) Where the rudder actuators are bolted to the hull, the grade of the bolts used is not to be less than 8.8. Unless the bolts are adjusted and fitted with a controlled tightening, strong shocks are to be fitted in order to prevent any lateral displacement of the rudder actuator.

5.3 Locking equipment

5.3.1 Steering gear systems are to be equipped with a locking system effective in all rudder positions.

For hydraulic plants shutoff valves directly at the cylinder are accepted instead.

5.4 Rudder angle indication

5.4.1 The rudder position must be clearly indicated in the wheelhouse and at all steering stations. Where the steering gear is operated electrically or hydraulically, the rudder angle must be signalled by a device (rudder position indicator) which is actuated either by the rudder stock itself or by parts which are rigidly connected to it.

5.4.2 The rudder position at any moment must also be indicated at the steering gear itself.

5.5 Piping

5.5.1 The pipes of hydraulic steering gear systems are to be installed in such a way as to ensure maximum protection while remaining readily accessible.

Pipes are to be installed at a sufficient distance from the vessel's shell. As far as possible, pipes should not pass through cargo spaces.

Pipes are to be so installed that they are free from stress and vibration.

5.5.2 The pipes of main and auxiliary steering gear systems are normally to be laid independently of each other. With the Society's consent, the joint use of pipes for the main and auxiliary steering gear systems may be permitted.

In such cases the design pressure for pipes and joints shall be 1,3 times the maximum permissible working pressure.

5.5.3 No other power consumers may be connected to the hydraulic steering gear drive unit. Where there are two independent drive units such a connection to one of the two systems is however acceptable if the consumers are connected to the return line and may be disconnected from the drive unit by means of an isolating device.

5.6 Overload protections

5.6.1 Mechanical rudder stops

a) The steering gear is to be provided with strong rudder stops capable of mechanically stopping the rotation of the rudder at an angle slightly greater than its maximum working angle. Alternatively, these stops may be fitted on the vessel to act on another point of the mechanical transmission system between the rudder actuator and the rudder blade. These stops may be built in with the actuator design.

b) The scantlings of the rudder stops and of the components transmitting to the vessel's structure the forces applied on these stops are to be determined for the greater value of the torques T_R or T_G.

Where $T_G \geq 1{,}5T_R$, the rudder stops are to be fitted between the rudder actuator and the rudder stock, unless the rudder stock as well as all the components transmitting mechanical forces between the rudder actuator and the rudder blade are suitably strengthened.

5.6.2 Rudder angle limiters

a) Power-operated steering gear is to be provided with positive arrangements, such as limit switches, for stopping the gear before the rudder stops are reached. These arrangements are to be synchronised with the gear itself and not with the steering gear control.

b) For power-operated steering gears and where the rudder may be oriented to more than 35° at very reduced speed, it is recommended to fit a limit system 35° for full speed. A notice is to be displayed at all steering wheel stations indicating that rudder angles of more than 35° are to be used only at very reduced speed.

5.6.3 Relief valves

Relief valves are to be fitted in accordance with [2.6.5].

5.6.4 Buffers

Buffers are to be provided on all vessels fitted with mechanical steering gear. They may be omitted on hydraulic gear equipped with relief valves or with calibrated bypasses.

6 Certification, inspection and testing

6.1 Testing of power units

6.1.1 The power units are required to undergo test on a test stand. The relevant works test certificates are to be presented at the time of the final inspection of the steering gear.

For electric motors, see Ch 2, Sec 4.

Hydraulic pumps are to be subjected to pressure and operational tests. Where the drive power of the hydraulic pump is 50 kW or more, these tests are to be carried out in presence of a Society Surveyor.

6.2 Testing of materials

6.2.1 Components subject to pressure or transmitting mechanical forces

a) Materials of components subject to pressure or transmitting mechanical forces, specifically:
- cylindrical shells of hydraulic cylinders, rams and piston rods
- tillers, quadrants
- rotors and rotor housings for rotary vane steering gear
- hydraulic pump casings
- and hydraulic accumulators, if any,

are to be duly tested, including examination for internal defects, in accordance with the requirements of NR216 Materials and Welding.

b) A works' certificate may be accepted for low stressed parts, provided that all characteristics for which verification is required are guaranteed by such certificate.

6.2.2 Hydraulic piping, valves and accessories

Tests for materials of hydraulic piping, valves and accessories are to comply with the provisions of Ch 1, Sec 10, [20.3].

6.3 Inspection and tests during manufacturing

6.3.1 Components subject to pressure or transmitting mechanical forces

a) The mechanical components referred to in [6.2.1] are to be subjected to appropriate non-destructive tests. For hydraulic cylinder shells, pump casings and accumulators, refer to Ch 1, Sec 3, [7].

b) Defects may be repaired by welding only on forged parts or steel castings of weldable quality. Such repairs are to be conducted under the supervision of the Surveyor in accordance with the applicable requirements of NR216 Materials and Welding.

6.3.2 Hydraulic piping, valves and accessories

Hydraulic piping, valves and accessories are to be inspected and tested during manufacturing in accordance with Ch 1, Sec 10, [20].

6.4 Inspection and tests after completion

6.4.1 Hydrostatic tests

a) Hydraulic cylinder shells and accumulators are to be subjected to hydrostatic tests according to the relevant provisions of Ch 1, Sec 3, [7].

b) Hydraulic piping, valves and accessories and hydraulic pumps are to be subjected to hydrostatic tests according to the relevant provisions of Ch 1, Sec 10, [20.4].

6.4.2 Onboard tests

After installation on board the vessel, the steering gear is to be subjected to the tests detailed in Ch 1, Sec 15, [3.7].

6.4.3 River trials

For the requirements of river trials, refer to Ch 1, Sec 15.

SECTION 12 THRUSTERS

1 General

1.1 Application

1.1.1 Thrusters developing power equal to 110 kW or more

The requirements of this Section apply to the following types of thrusters developing power equal to 110 kW or more:

- transverse thrusters intended for manoeuvring
- thrusters intended for propulsion and steering.

Thrusters intended for propulsion and steering of vessels with ice strengthening are to comply with the additional requirements of Pt D, Ch 2, Sec 1, [4.3].

Transverse thrusters intended for manoeuvring of vessels with an ice class notation are required to comply with the additional requirement Pt D, Ch 2, Sec 1, [5.3.1] only.

1.1.2 Thrusters developing power less than 110 kW

Thrusters of less than 110 kW are to be built in accordance with sound marine practice and tested as required in [3.2] to the satisfaction of the Surveyor.

1.2 Definitions

1.2.1 Thruster

A thruster is a propeller installed in a revolving nozzle or in a special transverse tunnel in the vessel, or a water-jet. A thruster may be intended for propulsion, manoeuvring and steering or any combination thereof. Propulsion propellers in fixed nozzles are not considered thrusters (see Ch 1, Sec 8, [1.1.1]).

1.2.2 Transverse thruster

A transverse thruster is an athwartship thruster developing a thrust in a transverse direction for manoeuvring purposes.

1.2.3 Azimuth thruster

An azimuth thruster is a thruster which has the capability to rotate through 360° in order to develop thrust in any direction.

1.2.4 Water-jet

A water-jet is equipment constituted by a tubular casing (or duct) enclosing an impeller. The shape of the casing is such as to enable the impeller to produce a water-jet of such intensity as to give a positive thrust. Water-jets may have means for deviating the jet of water in order to provide a steering function.

Table 1 : Plans to be submitted for athwartship thrusters and azimuth thrusters

No.	A/I **(1)**	ITEM
General requirements for all thrusters		
1	I	General arrangement of the thruster
2	A	Propeller, including the applicable details mentioned in Ch 1, Sec 8
3	A	Bearing details
4	A	Propeller and intermediate shafts
5	A	Gears, including the applicable details mentioned in Ch 1, Sec 6
Specific requirements for transverse thrusters		
6	A	Structure of the tunnel showing the materials and their thickness
7	A	Structural equipment or other connecting devices which transmit the thrust from the propeller to the tunnel
8	A	Sealing devices (propeller shaft gland and thruster-tunnel connection)
9	A	For the adjustable pitch propellers: pitch control device and corresponding monitoring system
Specific requirements for rotating and azimuth thrusters		
10	A	Structural items (nozzle, bracing, etc.)
11	A	Structural connection to hull
12	A	Rotating mechanism of the thruster
13	A	Thruster control system
14	A	Piping systems connected to thruster
(1) A = to be submitted for review I = to be submitted for information.		

Table 2 : Plans to be submitted for water-jets

No	A/I **(1)**	ITEM
1	I	General arrangement of the water-jet
2	A	Casing (duct) (location and shape) showing the materials, the thicknesses and the forces acting on the hull
3	A	Details of the shafts, flanges, keys
4	I	Sealing gland
5	A	Bearings
6	A	Impeller
7	A	Steering and reversing buckets and their control devices as well as the corresponding hydraulic diagrams
(1) A = to be submitted for review I = to be submitted for information.		

Table 3 : Data and documents to be submitted for athwartship thrusters, azimuth thrusters and water-jets

No	A/I **(1)**	ITEM
1	I	Rated power and revolutions
2	I	Rated thrust
3	A	Material specifications of the major parts, including their physical, chemical and mechanical properties
4	A	Where parts of thrusters are of welded construction, all particulars on the design of welded joints, welding procedures, heat treatments and non-destructive examinations after welding
5	I	Where applicable, background information on previous operating experience in similar applications
(1) A = to be submitted for review I = to be submitted for information.		

1.3 Thrusters intended for propulsion

1.3.1 In general, at least two azimuth thrusters are to be fitted in vessels where these are the sole means of propulsion. Single azimuth thruster installations will be specially considered by the Society on a case by case basis.

This requirement also applies to water-jets.

1.4 Documentation to be submitted

1.4.1 Plans to be submitted for athwartship thrusters and azimuth thrusters

For thrusters developing power equal to 110 kW or more, the plans listed in Tab 1 are to be submitted.

1.4.2 Plans to be submitted for water-jets

The plans listed in Tab 2 are to be submitted.

1.4.3 Additional data to be submitted

The data and documents listed in Tab 3 are to be submitted by the manufacturer together with the plans.

2 Design and Construction

2.1 Materials

2.1.1 Propellers

For requirements relative to material intended for propellers, see Ch 1, Sec 8, [2.1.1].

2.1.2 Other thruster components

For the requirements relative to materials intended for other parts of the thrusters, such as gears, shaft, couplings, etc., refer to the applicable parts of the Rules.

2.2 Transverse thrusters and azimuth thrusters

2.2.1 Prime movers

a) Diesel engines intended for driving thrusters are to comply with the applicable requirements of Ch 1, Sec 2.

b) Electric motors intended for driving thrusters and their feeding systems are to comply with the requirements of Ch 2, Sec 4. In particular:

- provisions are to be made to prevent starting of the motors whenever there are insufficient generators in operation
- intermittent duty thrusters will be the subject of special consideration by the Society.

2.2.2 Propellers

a) For propellers of thrusters intended for propulsion, the requirements of Ch 1, Sec 8, [2.5] apply.

b) For propellers of thrusters intended for manoeuvring only, the requirements of Ch 1, Sec 8, [2.5] also apply, although the increase in thickness of 10% does not need to be applied.

2.2.3 Shafts

a) For propeller shafts of thrusters intended for propulsion, the requirements of Ch 1, Sec 7, [2.2.3] apply.

b) For propellers of thrusters intended for manoeuvring only, the minimum diameter d_S of the shaft, in mm, is not to be less than the value obtained by the following formula:

$$d_S = [(C \cdot M_T)^2 + (D \cdot M)^2]^{1/6} \cdot \left(\frac{1}{1 - Q^4}\right)^{1/3}$$

where:

M_T : Maximum transmitted torque, in N·m; where not indicated, M_T may be assumed equal to: $M_T = 9550\ (P/N)$

where:

P : Maximum power of the thruster prime mover, in kW

N : Rotational speed of the propeller, in rev/min

M : Bending moment, in N·m, at the shaft section under consideration

C : Coefficient equal to:

$$C = 10{,}2 + \frac{28000}{R_{S,MIN}}$$

D : Coefficient equal to:

$$D = \frac{170000}{412 + R_{S,MIN}}$$

$R_{S,\,MIN}$: Minimum yield strength of the shaft material, in N/mm^2

Q : Coefficient equal to:

- for solid shafts: Q = 0
- for hollow shafts: Q = the ratio between the diameter of the hole and the external diameter of the shaft. If $Q \leq 0{,}3$, Q may be assumed equal to 0.

The above diameter d_S is to be increased by 10% in the case of keyed connection to the propeller in way of key.

2.2.4 Gears

a) Gears of thrusters intended for propulsion are to be in accordance with the applicable requirements of Ch 1, Sec 6, applying the safety factors for propulsion gears.

b) Gears of thrusters intended for manoeuvring only are to be in accordance with the applicable requirements of Ch 1, Sec 6, applying the safety factors for auxiliary gears.

2.2.5 Nozzles and connections to hull for azimuth thrusters

a) For the requirements relative to the nozzle structure, see Pt B, Ch 7, Sec 1, [8].

b) The scantlings of the nozzle connection to the hull and the welding type and size will be specially considered by the Society, which reserves the right to require detailed stress analysis in the case of certain high power installations.

c) For steerable thrusters, the equivalent rudder stock diameter is to be calculated in accordance with the requirements of Pt B, Ch 7, Sec 1.

2.2.6 Transverse thruster tunnel

a) The thickness of the tunnel is not to be less than the adjacent part of the hull.

b) Special consideration will be given by the Society to tunnels connected to the hull by connecting devices other than welding.

2.2.7 Electrical supply for steerable thrusters

The generating and distribution system is to be designed in such a way that the steering capability of the thruster can be maintained or regained within a period of 45 seconds, in the event of single failure of the system, and that the effectiveness of the steering capability is not reduced by more than 50% under such conditions. Details of the means provided for this purpose are to be submitted to the Society.

2.3 Water-jets

2.3.1 Shafts

The diameter of the shaft supporting the impeller is not to be less than the diameter d_2, in mm, obtained by the following formula:

$$d_2 = 100 f h \cdot \left(\frac{P}{N}\right)^{1/3} \cdot \left(\frac{1}{1 - Q^4}\right)^{1/3}$$

where:

P : Power, in kW

N: : Rotational speed, in rpm

f : Calculated as follows:

$$f = \left(\frac{560}{R_m + 160}\right)^{1/3}$$

where R_m is the ultimate tensile strength of the shaft material, in N/mm^2

h: :
- h = 1,00 when the shaft is only transmitting torque loads, and when the weight and thrust of the propeller are totally supported by devices located in the fixed part of the thruster
- h = 1,22 where the impeller is fitted with key or shrink-fitted.

Q : As defined in [2.2.3].

The shafts are to be protected against corrosion by means of either a continuous liner or an oil-gland of an approved type, or by the nature of the material of the shaft.

2.3.2 Guide vanes, shaft support

a) Guide vanes and shaft supports, if any, are to be fitted in accordance with direction of flow. Trailing and leading edges are to be fitted with rounded profiles.

b) Fillet radius are generally not be less than the maximum local thickness of concerned element.Fatigue strength calculation is to be submitted.

2.3.3 Stator and impellers

a) Design is to take into account the loads developed in free going conditions and also in peculiar manoeuvres like crash stop.

b) Tip clearance is to take into account vibratory behaviours, displacements and any other expansion mode in all operating conditions of the water jet.

c) Fillet radii are generally not to be less than the maximum local thickness of concerned element.

d) There is to be no natural frequency of stator blades or rotor blades in the vicinity of the excitation frequencies due to hydrodynamic interaction between stator blades and rotor blades. Calculations are to be submitted for maximum speed and any currently used speed.

2.3.4 Nozzle and reversing devices

Design of nozzle and reversing devices are to take into account the loads developed in all operating conditions of the water jet, including transient loads.

2.3.5 Steering performance

Steering performance and emergency steering availability are to be at least equivalent to the requirements in Ch 1, Sec 11, [4.2] and Ch 1, Sec 11, [4.3].

2.4 Alarm, monitoring and control systems

2.4.1 Steering thruster controls

a) Controls for steering are to be provided from the wheelhouse, the machinery control station and locally.

b) Means are to be provided to stop any running thruster at each of the control stations.

c) A thruster angle indicator is to be provided at each steering control station. The angle indicator is to be independent of the control system.

2.4.2 Alarm and monitoring equipment

For alarm and monitoring, see Ch 3, Sec 2.

3 Testing and certification

3.1 Material tests

3.1.1 Propulsion and steering thrusters

All materials intended for parts transmitting torque and for propeller/impeller blades are to be tested in accordance with the requirements of Ch 1, Sec 8, [4.1] in the presence of a Surveyor.

3.1.2 Transverse thrusters

Material testing for parts of athwartship thrusters does not need to be witnessed by a Surveyor, provided full test reports are made available to him.

3.2 Testing and inspection

3.2.1 Thrusters

Thrusters are to be inspected as per the applicable requirements in Ch 1, Sec 8, [4.2].

3.2.2 Prime movers

Prime movers are to be tested in accordance with the requirements applicable to the type of mover used.

3.3 Certification

3.3.1 Certification of thrusters

Thrusters are to be individually tested and certified by the Society.

3.3.2 Mass produced thrusters

Mass produced thrusters may be accepted within the framework of the type approval program of the Society.

SECTION 13 LIQUEFIED GAS INSTALLATIONS FOR DOMESTIC PURPOSES

1 General

1.1 Application

1.1.1 The requirements of this Section apply to permanently installed domestic liquefied gas installations on vessels.

1.1.2 Exceptions to these Rules are possible where they are permitted by the statutory Regulations in force in the area of service.

1.2 General provisions

1.2.1 On vessels intended to carry dangerous goods, liquefied gas installations are to comply also with the requirements dealing with fire and naked light developed in the different sections of Part D, Chapter 3.

1.2.2 Liquefied gas installations consist essentially of a supply unit comprising one or more gas receptacles, and of one or more reducing valves, a distribution system and a number of gas-consuming appliances.

1.2.3 Such installations may be operated only with commercial propane.

1.3 Documents for review

1.3.1 Diagrammatic drawings including the following information are to be submitted for review by the Society:

- service pressure
- size and nature of materials for piping
- capacity and other technical characteristics for accessories
- generally, all information allowing the verification of the requirements of the present Section.

2 Gas installations

2.1 General

2.1.1 Liquefied gas installations shall be suitable throughout for use with propane and shall be built and installed in accordance with best practice.

2.1.2 A liquefied gas installation may be used only for domestic purposes in the accommodation and the wheelhouse, and for corresponding purposes on passenger vessels.

2.1.3 There may be a number of separate installations on board. A single installation may not be used to serve accommodation areas separated by a hold or a fixed tank.

2.1.4 No part of a liquefied gas installation shall be located in the engine room.

2.2 Gas receptacles

2.2.1 Only receptacles with an approved content of between 5 and 35 kg are permitted.

In principle, in the case of passenger vessels, the use of receptacles with a larger content may be approved.

2.2.2 The gas receptacles must be permanently marked with the test pressure.

2.3 Supply unit

2.3.1 Supply units shall be installed on deck in a freestanding or wall cupboard located outside the accommodation area in a position such that it does not interfere with movement on board. They shall not, however, be installed against the fore or aft bulwark plating. The cupboard may be a wall cupboard set into the superstructure provided that it is gastight and can only be opened from outside the superstructure. It shall be so located that the distribution pipes leading to the gas consumption points are as short as possible.

2.3.2 No more receptacles may be in operation simultaneously than are necessary for the functioning of the installation. Several receptacles may be in operation only if an automatic reversing coupler is used. Up to four receptacles may be in operation per supply unit. The number of receptacles on board, including spare receptacles, shall not exceed six per installation.

2.3.3 Up to six receptacles may be in operation on passenger vessels with galleys or canteens for passengers. The number of receptacles on board, including spare receptacles, shall not exceed nine per installation.

2.3.4 Pressure regulators, or in the case of two-stage reduction the first pressure regulator, shall be fitted to a wall in the same cupboard as the receptacles.

2.3.5 Supply units shall be so installed that any leaking gas can escape from the cupboard into the open without any risk of it penetrating inside the vessel or coming into contact with a source of ignition.

2.3.6 Cupboards shall be constructed of fire-resistant materials and shall be adequately ventilated by apertures in the top and bottom. Receptacles shall be placed upright in the cupboards in such a way that they cannot be overturned.

2.3.7 Cupboards shall be so built and placed that the temperature of the receptacles cannot exceed 50°C.

2.4 Pressure regulators

2.4.1 Gas-consuming appliances may be connected to receptacles only through a distribution system fitted with one or more pressure regulators to bring the gas pressure down to the utilisation pressure. The pressure may be reduced in one or two stages. All pressure regulators shall be set permanently at a pressure determined in accordance with [2.5].

2.4.2 The final pressure regulators shall be either fitted with or immediately followed by a device to protect the pipe automatically against excess pressure in the event of a malfunctioning of the pressure regulator. It shall be ensured that in the event of a leak in the protection device any leaking gas can escape into the open without any risk of it penetrating inside the vessel or coming into contact with a source of ignition; if necessary, a special pipe shall be fitted for this purpose.

2.4.3 The protection devices and vents shall be protected against the entry of water.

2.5 Pressure

2.5.1 Where two-stage regulating systems are used, the mean pressure shall be not more than 2,5 bar above atmospheric pressure.

2.5.2 The pressure at the outlet from the last pressure regulator shall be not more than 0,05 bar above atmospheric pressure, with a tolerance of 10%.

2.6 Piping and flexible tubes

2.6.1 Pipes shall consist of fixed steel or copper tubing, in compliance with requirements of Ch 1, Sec 10.

However, pipes connecting with the receptacles shall be high-pressure flexible tubes or spiral tubes suitable for propane. Gas-consuming appliances may, if not permanently installed, be connected by means of suitable flexible tubes not more than 1 m long.

2.6.2 Pipes shall be able to withstand any stresses or corrosive action which may occur under normal operating conditions on board and their characteristics and layout shall be such that they ensure a satisfactory flow of gas at the appropriate pressure to the gas-consuming appliances.

2.6.3 Pipes shall have as few joints as possible. Both pipes and joints shall be gastight and shall remain gastight despite any vibration or expansion to which they may be subjected.

2.6.4 Pipes shall be readily accessible, properly fixed and protected at every point where they might be subject to impact or friction, particularly where they pass through steel bulkheads or metal walls. The entire outer surface of steel pipes shall be treated against corrosion.

2.6.5 Flexible pipes and their joints shall be able to withstand any stresses which may occur under normal operating conditions on board. They shall be installed in such a way that they are free of tension, cannot be heated excessively and can be inspected over their entire length.

2.7 Distribution system

2.7.1 It shall be possible to shut off the entire distribution system by means of a main valve which is at all times easily and rapidly accessible.

2.7.2 Each gas-consuming appliance shall be supplied by a separate branch of the distribution system, and each branch shall be controlled by a separate closing device.

2.7.3 Valves shall be fitted at points where they are protected from the weather and from impact.

2.7.4 An inspection joint shall be fitted after each pressure regulator. It shall be ensured using a closing device that in pressure tests the pressure regulator is not exposed to the test pressure.

2.8 Gas-consuming appliances

2.8.1 The only appliances that may be installed are propane-consuming appliances equipped with devices that effectively prevent the escape of gas in the event of either the flame or the pilot light being extinguished.

2.8.2 Appliances shall be so placed and connected that they cannot overturn or be accidentally moved and any risk of accidental wrenching of the connecting pipes is avoided.

2.8.3 Heating and water-heating appliances and refrigerators shall be connected to a flue for evacuating combustion gases into the open air.

2.8.4 The installation of gas-consuming appliances in the wheelhouse is permitted only if the wheelhouse is so constructed that no leaking gas can escape into the lower parts of the vessel, in particular through the penetrations for control lines to the engine room.

2.8.5 Gas-consuming appliances may be installed in sleeping quarters only if combustion takes place independently of the air in the quarters.

2.8.6 Gas-consuming appliances in which combustion depends on the air in the rooms in which they are located shall be installed in rooms which are sufficiently large.

3 Ventilation system

3.1 General

3.1.1 In rooms containing gas-consuming appliances in which combustion depends on the ambient air, fresh air shall be supplied and combustion gases evacuated by means of ventilation apertures of adequate dimensions, with a clear section of at least 150 cm^2 per aperture.

3.1.2 Ventilation apertures shall not have any closing device and shall not lead to sleeping quarters.

3.1.3 Evacuation devices shall be so designed as to ensure the safe evacuation of combustion gases. They shall be reliable in operation and made of non-combustible materials. Their operation shall not be affected by forced ventilation.

4 Tests and trials

4.1 Definition

4.1.1 A piping shall be considered gastight if, after sufficient time has elapsed for thermal balancing, no drop in the test pressure is noted during the following 10 minutes.

4.2 Testing conditions

4.2.1 The completed installation shall be subjected to tests defined in [4.2.2] to [4.2.8].

4.2.2 Medium-pressure pipes between the closing device, referred to in [2.7.4], of the first pressure regulator and the valves fitted before the final pressure regulator:

a) pressure test, carried out with air, an inert gas or a liquid at a pressure 20 bar above atmospheric pressure

b) gastightness test, carried out with air or an inert gas at a pressure 3,5 bar above atmospheric pressure.

4.2.3 Pipes at the service pressure between the closing device, referred to in [2.7.4], of the only pressure regulator or the final pressure regulator and the valves fitted before the gas-consuming appliances:

- tightness test, carried out with air or an inert gas at a pressure of 1 bar above atmospheric pressure.

4.2.4 Pipes situated between the closing device, referred to in [2.7.4], of the only pressure regulator or the final pressure regulator and the controls of the gas-consuming appliance:

- leak test at a pressure of 0,15 bar above atmospheric pressure.

4.2.5 In the tests referred to in [4.2.2] item b), [4.2.3] and [4.2.4], the pipes are deemed gastight if, after sufficient time to allow for equalisation with ambient temperature, no decrease in the test pressure is observed during a further 10 minute test period.

4.2.6 Receptacle connectors, piping and other fittings subjected to the pressure in the receptacles, and joints between pressure regulators and the distribution pipe:

- tightness test, carried out with a foaming substance, at the operating pressure.

4.2.7 All gas-consuming appliances shall be brought into service at the nominal capacity and shall be tested for satisfactory and undisturbed combustion at different capacity settings.

Flame failure devices shall be checked to ensure that they operate satisfactorily.

4.2.8 After the test referred to in [4.2.7], it shall be verified, in respect of each gas-consuming appliance connected to a flue, whether, after five minutes' operation at the nominal capacity, with windows and doors closed and the ventilation devices in operation, any combustion gases are escaping into the room through the air intake.

If there is a more than momentary escape of such gases, the cause shall immediately be detected and remedied. The appliance shall not be approved for use until all defects have been eliminated.

SECTION 14 TURBOCHARGERS

1 General

1.1 Application

1.1.1 These requirements are applicable for turbochargers with regard to design approval, type testing and certification and their matching on engines.

Turbochargers are to be type approved, either separately or as a part of an engine. The requirements are written for exhaust gas driven turbochargers, but apply in principle also for engine driven chargers.

1.1.2 The requirements escalate with the size of the turbochargers. The parameter for size is the engine power (at MCR) supplied by a group of cylinders served by the actual turbocharger, (e.g. for a V-engine with one turbocharger for each bank the size is half of the total engine power).

1.1.3 Turbochargers are categorised in two groups depending on served power by cylinder groups with:

- Category A: ≤ 1000 kW
- Category B: > 1000 kW

1.2 Documentation to be submitted

1.2.1 The Manufacturer is to submit to the Society the documents as such:

- On request for approval as described in Tab 1 for category A turbochargers
- For approval or information as described in Tab 2 for category B turbochargers

Table 1 : Documentation to be submitted for approval on request for Category A turbochargers

No.	Document
1	Containment test report
2	Cross sectional drawing with principal dimensions and names of components
3	Test program

Table 2 : Documentation to be submitted for Category B turbochargers

No	I/A **(1)**	Document
1	I	Cross sectional drawing with principal dimensions and materials of housing components for containment evaluation
2	A	Documentation of containment in the event of disc fracture
3	I	Operational data and limitation as: **(2)** • Maximum permissible operating speed (rpm) • Alarm level for over-speed • Maximum permissible exhaust gas temperature before turbine • Alarm level for exhaust gas temperature before turbine • Minimum lubrication oil inlet pressure • Lubrication oil inlet pressure low alarm set point • Maximum lubrication oil outlet temperature • Lubrication oil outlet temperature high alarm set point • Maximum permissible vibration levels, i.e. self- and externally generated vibration
4	A	Arrangement of lubrication system, all variants within a range.
5	I	Type test reports.
6	A	Test program

(1) A = to be submitted for review
I = to be submitted for information

(2) Alarm levels may be equal to permissible limits but shall not be reached when operating the engine at 110% power or at any approved intermittent overload beyond the 110%.

2 Design and construction

2.1 Materials

2.1.1 The requirements of [2.1.2] are to be complied with, as far as applicable, at the Society's discretion.

2.1.2 Approved materials

a) Turbocharger materials are to fulfil the requirements imposed by the operating conditions of the individual components. In the choice of materials, account is to be taken of effects such as creep, thermal fatigue, oxidation and corrosion to which individual components are subject when in service. Evidence of the suitability of the materials is to be supplied to the Society in the form of details of their chemical and mechanical properties and of the heat treatment applied. Where composite materials are used, their method of manufacture is to be described.

b) Turbine blades are to be built of corrosion and heat-resistant materials.

2.2 Design

2.2.1 The requirements of NR467, Pt C, Ch 1, Sec 5, [2] are to be complied with, as far as applicable, at the Society's discretion.

2.3 Monitoring

2.3.1 General

The general requirements given in Ch 3, Sec 2 apply.

3 Type tests, workshop inspection and testing, certification

3.1 Type tests

3.1.1 Requirements mentioned from [3.1.2] to [3.1.7] are applicable to Category B turbochargers.

3.1.2 The type test for a generic range of turbochargers may be carried out either on an engine (for which the turbocharger is foreseen) or in a test rig.

3.1.3 Turbochargers are to be subjected to at least 500 load cycles at the limits of operation. This test may be waived if the turbocharger together with the engine is subjected to this kind of low cycle testing, see NR467, Pt C, Ch 1, Sec 2, [4.1.4].

3.1.4 The suitability of the turbocharger for such kind of operation is to be preliminarily stated by the manufacturer.

3.1.5 The rotor vibration characteristics shall be measured and recorded in order to identify possible sub-synchronous vibrations and resonances.

3.1.6 The type test shall be completed by a hot running test at maximum permissible speed combined with maximum permissible temperature for at least one hour. After this test, the turbocharger shall be opened for examination, with focus on possible rubbing and the bearing conditions.

3.1.7 The extent of the surveyor's presence during the various parts of the type tests is left to the discretion of the Society.

3.2 Workshop inspections and testing

3.2.1 Category B turbochargers shall go through following inspections and testings, and the works' certificate (W) (see NR216 Materials and Welding, Ch 1, Sec 1, [4.2.3]) shall be produced:

- Chemical composition of material for the rotating parts
- Mechanical properties of the material of a representative specimen for the rotating parts and the casing
- UT and crack detection of rotating parts
- Dimensional inspection of rotating parts
- Rotor balancing
- Hydraulic testing of cooling spaces to 4 bars or 1.5 times maximum working pressure, whichever is higher
- Overspeed test of all compressor wheels for a duration of 3 minutes at either 20% above alarm level speed at room temperature or 10% above alarm level speed at 45°C inlet temperature when tested in the actual housing with the corresponding pressure ratio. The overspeed test may be waived for forged wheels that are individually controlled by an approved non-destructive method.

3.3 Certification

3.3.1 The manufacturer shall adhere to a certification scheme according to NR320 to ensure that the designer's specifications are met, and that manufacturing is in accordance with the approved drawings.

For category B turbochargers, certification scheme for HBV product shall be selected. Each turbocharger shall be delivered with a works' certificate.

SECTION 15 TESTS ON BOARD

1 General

1.1 Application

1.1.1 This Section covers onboard tests, both at the moorings and during river trials. Such tests are additional to the workshop tests required in the other Sections of this Chapter.

1.2 Purpose of onboard tests

1.2.1 Onboard tests are intended to demonstrate that the main and auxiliary machinery and associated systems are functioning properly, in respect of the criteria imposed by the Rules. The tests are to be witnessed by a Surveyor.

1.3 Documentation to be submitted

1.3.1 A comprehensive list of the onboard tests intended to be carried out by the shipyard is to be submitted to the Society.

For each test, the following information is to be provided:

- scope of the test
- parameters to be recorded.

2 General requirements for onboard tests

2.1 Trials at the moorings

2.1.1 Trials at the moorings are to demonstrate the:

a) satisfactory operation of the machinery

b) quick and easy response to operational commands

c) protection of the various installations, as regards:
   - the protection of mechanical parts
   - the safeguards for personnel

d) accessibility for cleaning, inspection and maintenance.

Where the above features are not deemed satisfactory and require repairs or alterations, the Society reserves the right to require the repetition of the trials at the moorings, either wholly or partly, after such repairs or alterations have been carried out.

2.2 River trials

2.2.1 Scope of the tests

River trials are to be conducted after the trials at the moorings and are to include:

a) demonstration of the proper operation of the main and auxiliary machinery, including monitoring, alarm and safety systems, under realistic service conditions

b) check of the propulsion capability when one of the essential auxiliaries becomes inoperative

c) detection of dangerous vibrations by taking the necessary readings when required

d) checks either deemed necessary for vessel classification or requested by the interested parties and which are possible only in the course of navigation.

2.2.2 Exemptions

Exemption from some of the river trials may be considered by the Society in the case of vessels having a sister vessel for which the satisfactory behavior in service is demonstrated.

Such exemption is, in any event, to be agreed upon by the interested parties and is subject to the satisfactory results of trials at the moorings to verify the safe and efficient operation of the propulsion system.

3 Onboard tests for machinery

3.1 Conditions of river trials

3.1.1 Degree of loading of vessels and convoys

During navigation tests, vessels intended to carry goods shall be loaded to at least 70% of their tonnage and loading, distributed in such a way as to ensure an horizontal attitude as far as possible.

3.1.2 Power of the machinery

a) The power developed by the propulsion machinery in the course of the river trials is to be as close as possible to the power for which classification has been requested. In general, this power is not to exceed the maximum continuous power at which the weakest component of the propulsion system can be operated. In cases of diesel engines, it is not to exceed the maximum continuous power for which the engine type concerned has been reviewed/approved.

b) Where the rotational speed of the shafting is different from the design value, thereby increasing the stresses in excess of the maximum allowable limits, the power developed in the trials is to be suitably modified so as to confine the stresses within the design limits.

3.1.3 Determination of the power and rotational speed

a) The rotational speed of the shafting is to be recorded in the course of the river trials, preferably by means of a continuous counter.

b) In general, the power is to be determined by means of torsiometric readings, to be effected with procedures and instruments deemed suitable by the Society.

As an alternative, for reciprocating internal combustion engines, the power may be determined by measuring the fuel consumption and on the basis of the other operating characteristics, in comparison with the results of bench tests of the prototype engine.

Other methods of determining the power may be considered by the Society on a case by case basis.

3.2 Navigation and manoeuvring tests

3.2.1 General

Vessels shall display adequate navigability and manoeuvrability. Self-propelled vessels shall meet the requirements set out in [3.2.2] to [3.2.7].

3.2.2 Navigation tests

Navigability and manoeuvrability shall be checked by means of navigation tests. Compliance with the requirements of [3.2.4] to [3.2.7] shall, in particular, be examined.

The Society may dispense with all or part of the tests where compliance with the navigability and manoeuvrability requirements is proven in another manner.

3.2.3 Test area

The navigation tests referred to in [3.2.2] shall be carried out on areas of waterways that have been designated by the Society.

Those test areas shall be situated on a stretch of flowing or standing water that is if possible straight, at least 2 km long and sufficiently wide and is equipped with highly-distinctive marks for determining the position of the vessel.

It shall be possible for the Surveyor to plot the hydrological data such as depth of water, width of navigable channel and average speed of the current in the navigation area as a function of the various water levels.

3.2.4 Stopping capacity

Vessels and convoys shall be able to stop facing downstream in good time while remaining adequately manoeuvrable.

Where the vessels are not longer than 86 m and not wider than 22,90 m, the stopping capacity mentioned above may be replaced by turning capacity.

The stopping capacity shall be proven by means of stopping manoeuvres carried out within a test area as referred to in [3.2.3] and turning capacity by turning manoeuvres in accordance with [3.2.7].

3.2.5 Astern trials

Where the stopping manoeuvre required in [3.2.4] is carried out in standing water, it shall be followed by a navigation test while going astern.

The ability of the machinery to reverse the direction of thrust of the propeller in sufficient time, and so to bring the vessel to rest within reasonable distance from maximum ahead service speed, shall be demonstrated and recorded.

3.2.6 Capacity of taking evasive action

Vessels and convoys shall be able to take evasive action in good time. That capacity shall be proven by means of evasive manoeuvres carried out within a test area as referred to in [3.2.3].

3.2.7 Turning capacity

Vessels and convoys not exceeding 86 m in length or 22,90 m in breadth shall be able to turn in good time.

That turning capacity may be replaced by the stopping capacity referred to in [3.2.4].

The turning capacity shall be proven by means of turning manoeuvres against the current.

3.3 Tests of diesel engines

3.3.1 General

a) The scope of the trials of diesel engines may be expanded in consideration of the special operating conditions, such as towing, trawling, etc.

b) Where the machinery installation is designed for special fuels, the ability of engines to burn such fuels is to be demonstrated.

3.3.2 Main propulsion engines driving fixed propellers

River trials of main propulsion engines driving fixed propellers are to include the following tests:

a) operation at rated engine speed n_0 for at least 2 hours

b) operation at engine speed corresponding to normal continuous cruise power for at least 1 hour

c) operation at engine speed n = 1,032 n_0 for 30 minutes

d) operation at minimum load speed

e) starting and reversing manoeuvres

f) operation in reverse direction of propeller rotation at a minimum engine speed of n = 0,7 n_0 for 10 minutes

g) tests of the monitoring, alarm and safety systems

h) for engines fitted with independently driven blowers, emergency operation of the engine with the blowers inoperative.

Note 1: The test in c) is to be performed only where permitted by the engine adjustment.

Note 2: The test in f) may be performed during the dock or sea trials.

3.3.3 Main propulsion engines driving controllable pitch propellers or reversing gears

a) The scope of the sea trials for main propulsion engines driving controllable pitch propellers or reversing gears is to comply with the relevant provisions of [3.3.2].

b) Engines driving controllable pitch propellers are to be tested at various propeller pitches.

3.3.4 Engines driving generators for propulsion

River trials of engines driving generators for propulsion are to include the following tests:

a) operation at 100% power (rated power) for at least 2 hours

b) operation at normal continuous cruise power for at least 1 hour

c) operation at 110% power for 30 minutes

d) operation in reverse direction of propeller rotation at a minimum engine speed 70% of the nominal propeller speed for 10 minutes

e) starting manoeuvres

f) tests of the monitoring, alarm and safety systems.

Note 1: Test d) may be performed during the dock or sea trials.

Note 2: Tests a) to f) are to be performed at rated speed with a constant governor setting. The powers refer to the rated electrical powers of the driven generators.

3.3.5 Engines driving auxiliaries

a) Engines driving generators or important auxiliaries are to be subjected to an operational test for at least 2 hours. During the test, the set concerned is required to operate at its rated power for at least 1 hour.

b) It is to be demonstrated that the engine is capable of supplying 100% of its rated power and, in the case of onboard generating sets, account is to be taken of the times needed to actuate the generator's overload protection system.

3.4 Test of air starting system for main and auxiliary engines

3.4.1 The capability of the starting air system to charge the air receivers within one hour from atmospheric pressure to a pressure sufficient to ensure the number of starts required in Ch 1, Sec 10, [17.3.1] for main and auxiliaries engines is to demonstrated.

3.5 Tests of gears

3.5.1 Tests during river trials

During the river trials, the performance of reverse and/or reduction gearing is to be verified, both when running ahead and astern.

In addition, the following checks are to be carried out:

- check of the bearing and oil temperature
- detection of possible gear hammering, where required by Ch 1, Sec 9, [3.5.1]
- test of the monitoring, alarm and safety systems.

3.5.2 Check of the tooth contact

a) Prior to the river trials, the tooth surfaces of the pinions and wheels are to be coated with a thin layer of suitable coloured compound.

Upon completion of the trials, the tooth contact is to be inspected. The contact marking is to appear uniformly distributed without hard bearing at the ends of the teeth and without preferential contact lines.

The tooth contact is to comply with Tab 1.

b) The verification of tooth contact at sea trials by methods other than that described above will be given special consideration by the Society.

c) In the case of reverse and/or reduction gearing with several gear trains mounted on roller bearings, manufactured with a high standard of accuracy and having an input torque not exceeding 20000 N·m, the check of the tooth contact may be reduced at the Society's discretion.

Such a reduction may also be granted for gearing which has undergone long workshop testing at full load and for which the tooth contact has been checked positively.

In any case, the teeth of the gears are to be examined by the Surveyor after the river trials. Subject to the results, additional inspections or re-examinations after a specified period of service may be required.

Table 1 : Tooth contact for gears

Heat treatment and machining	Percentage of tooth contact	
	across the whole face width	of the tooth working depth
Quenched and tempered, cut	70	40
Quenched and tempered, shaved or ground	90	40
Surface-hardened		

3.6 Tests of main propulsion shafting and propellers

3.6.1 Shafting alignment

Where alignment calculations are required to be submitted in pursuance of Ch 1, Sec 7, [3.3.1], the alignment conditions are to be checked on board as follows:

a) Shafting installation and intermediate bearing position, before and during assembling of the shafts

- optical check of the relative position of bushes after fitting
- check of the flanged coupling parameters (gap and sag)
- check of the centring of the shaft sealing glands.

b) Engine (or gearbox) installation, with floating vessel

- check of the engine (or gearbox) flanged coupling parameters (gap and sag)
- check of the crankshaft deflections before and after the connection of the engine with the shaft line, by measuring the variation in the distance between adjacent webs in the course of one complete revolution of the engine.

Note 1: The vessel is to be in the loading conditions defined in the alignment calculations.

c) Load on the bearings

- check of the intermediate bearing load by means of jack-up load measurements
- check of the bearing contact area by means of coating with an appropriate compound.

3.6.2 Shafting vibrations

Torsional vibration measurements are to be carried out where required by Ch 1, Sec 9. The type of the measuring equipment and the location of the measurement points are to be specified.

3.6.3 Bearings

The temperature of the bearings is to be checked under the machinery power conditions specified in [3.1.2].

3.6.4 Stern tube sealing gland

The stern tube oil system is to be checked for possible oil leakage through the stern tube sealing gland.

3.6.5 Propellers

a) For controllable pitch propellers, the functioning of the system controlling the pitch from full ahead to full astern position is to be demonstrated. It is also to be checked that this system does not induce any overload of the engine.

b) The proper functioning of the devices for emergency operations is to be tested during the river trials.

3.7 Tests of piping systems

3.7.1 Hydrostatic tests of piping after assembly on board

a) When the hydrostatic tests of piping referred to in Ch 1, Sec 10, [20.4.2] and Ch 1, Sec 10, [20.4.3] are carried out on board, they may be carried out in conjunction with the leak tests required in [3.7.2].

b) Low pressure pipes, such as bilge or ballast pipes are to be tested, after fitting on board, under a pressure at least equal to the maximum pressure to which they can be subjected in service. Moreover, the parts of such pipes which pass, outside pipe tunnels, through compartments for ballast water, fresh water, fuel or liquid cargo, are to be fitted before the hydraulic test of the corresponding compartments.

c) Heating coils in oil fuel tanks or in liquid cargo tanks and fuel pipes are to be subjected, after fitting on board, to a hydraulic test under a pressure not less than 1,5 times the design pressure, with a minimum of 4 bars.

3.7.2 Leak tests

Except otherwise permitted by the Society, all piping systems are to be leak tested under operational conditions after completion on board.

3.7.3 Functional tests

During the river trials, piping systems serving propulsion and auxiliary machinery, including the associated monitoring and control devices, are to be subjected to functional tests at the nominal power of the machinery. Operating parameters (pressure, temperature, consumption) are to comply with the values recommended by the equipment manufacturer.

3.7.4 Performance tests

The Society reserves the right to require performance tests, such as flow rate measurements, should doubts arise from the functional tests.

3.8 Tests of steering gear

3.8.1 General

a) The steering gear is to be tested during the river trials under the conditions stated in [3.1] in order to demonstrate, to the Surveyor's satisfaction, that the applicable requirements of Ch 1, Sec 11 are fulfilled.

b) For controllable pitch propellers, the propeller pitch is to be set at the maximum design pitch approved for the maximum continuous ahead rotational speed.

c) If the vessel cannot be tested at the deepest draught, alternative trial conditions will be given special consideration by the Society. In such case, the vessel speed corresponding to the maximum continuous number of revolutions of the propulsion machinery may apply.

3.8.2 Tests to be performed

Tests of the steering gear are to include at least:

a) functional test of the main and auxiliary steering gear with demonstration of the performances required by Ch 1, Sec 11, [2.3]

b) test of the steering gear power units, including transfer between steering gear power units

c) test of the isolation of one power actuating system, checking the time for regaining steering capability

d) test of the hydraulic fluid refilling system

e) test of the alternative power supply

f) test of the steering gear controls, including transfer of controls and local control

g) test of the means of communication between the navigation bridge, the engine room and the steering gear compartment

h) test of the alarms and indicators

i) where the steering gear design is required to take into account the risk of hydraulic locking, a test is to be performed to demonstrate the efficiency of the devices intended to detect this.

Note 1: Tests d) to i) may be carried out either during the mooring trials or during the river trials.

Note 2: For small vessels, the Society may accept departures from the above list, in particular to take into account the actual design features of their steering gear.

Note 3: Azimuth thrusters are to be subjected to the above tests, as far as applicable.

3.9 Tests of windlasses

3.9.1 The working test of the windlass is to be carried out in the presence of a Surveyor.

3.9.2 The anchor equipment is to be tested during river trials. As a minimum requirement, this test is required to demonstrate that the conditions specified in Ch 1, Sec 5, [1.2.1] can be fulfilled.

4 Inspection of machinery after river trials

4.1 General

4.1.1

a) For all types of propulsion machinery, those parts which have not operated satisfactorily in the course of the river trials, or which have caused doubts to be expressed as to their proper operation, are to be disassembled or opened for inspection.

Machinery or parts which are opened up or disassembled for other reasons are to be similarly inspected.

b) Should the inspection reveal defects or damage of some importance, the Society may require other similar machinery or parts to be opened up for inspection.

c) An exhaustive inspection report is to be submitted to the Society.

4.2 Diesel engines

4.2.1

a) In general, for all diesel engines, the following items are to be verified:

- the deflection of the crankshafts
- the cleanliness of the lubricating oil filters.

b) In the case of propulsion engines for which power tests have not been carried out in the workshop, some parts, agreed upon by the interested parties, are to be disassembled for inspection after the river trials.

Part C
Machinery, Electricity and Fire

Chapter 2
ELECTRICAL INSTALLATIONS

SECTION 1 GENERAL

SECTION 2 GENERAL DESIGN REQUIREMENTS

SECTION 3 SYSTEM DESIGN

SECTION 4 ROTATING MACHINES

SECTION 5 TRANSFORMERS

SECTION 6 SEMICONDUCTOR CONVERTERS

SECTION 7 STORAGE BATTERIES AND CHARGERS

SECTION 8 SWITCHGEAR AND CONTROLGEAR ASSEMBLIES

SECTION 9 CABLES

SECTION 10 MISCELLANEOUS EQUIPMENT

SECTION 11 LOCATION

SECTION 12 INSTALLATION

SECTION 13 ELECTRICAL PROPULSION PLANTS

SECTION 14 TESTING

SECTION 1 GENERAL

1 Application

1.1 General

1.1.1 The requirements of this Chapter apply to electrical installations on vessels. In particular, they apply to the components of electrical installations for:

- primary essential services
- secondary essential services
- essential services for special purposes connected with vessels specifically intended for such purposes (e.g. cargo pumps on tankers, cargo refrigerating systems, air conditioning systems on passenger vessels)
- services for habitability.

The other parts of the installation are to be so designed as not to introduce any risks or malfunctions to the above services.

1.2 References to other regulations and standards

1.2.1 Besides these Rules, electrical equipment shall meet a standard approved by the Society, such as IEC and EN.

1.2.2 When referred to by the Society, publications by the International Electrotechnical Commission (IEC) or other internationally recognised standards, are those currently in force at the date of agreement for vessel classification.

2 Documentation to be submitted

2.1

2.1.1 The documents listed in Tab 1 are to be submitted.

The list of documents requested is to be considered as guidance for the complete set of information to be submitted, rather than an actual list of titles.

The Society reserves the right to request the submission of additional documents in the case of non-conventional design or if it is deemed necessary for the evaluation of the system, equipment or components.

3 Definitions

3.1 Essential services

3.1.1 Essential services are defined in Pt A, Ch 1, Sec 1, [1.3].

3.2 Earthing

3.2.1 The earth connection to the general mass of the hull of the vessel in such a manner as will ensure at all times an immediate discharge of electrical energy without danger.

3.3 Emergency condition

3.3.1 A condition under which any services needed for normal operational and habitable conditions are not in working order due to failure of the main source of electrical power.

3.4 Hazardous areas

3.4.1 Areas in which an explosive atmosphere is or may be expected to be present in quantities such as to require special precautions for the construction, installation and use of electrical apparatus.

Note 1: An explosive gas atmosphere is a mixture with air, under atmospheric conditions, of flammable substances in the form of gas, vapour or mist, in which, after ignition, combustion spreads throughout the unconsumed mixture.

3.4.2 Hazardous areas are classified in zones based upon the frequency and the duration of the occurrence of explosive atmosphere.

3.4.3 Hazardous areas for explosive gas atmosphere are classified in the following zones:

- Zone 0: an area in which an explosive gas atmosphere is present continuously or is present for long periods
- Zone 1: an area in which an explosive gas atmosphere is likely to occur in normal operation
- Zone 2: an area in which an explosive gas atmosphere is not likely to occur in normal operation and if it does occur, is likely to do only infrequently and will exist for a short period only.

3.5 Certified safe-type equipment

3.5.1 Certified safe-type equipment is electrical equipment of a type for which a national or other appropriate authority has carried out the type verifications and tests necessary to certify the safety of the equipment with regard to explosion hazard when used in an explosive gas atmosphere.

Table 1 : Documents to be submitted

No.	I/A **(1)**	Documents to be submitted
1	A	General arrangement of electrical installation.
2	A	Single line diagram of main power and lighting systems.
3	I	Electrical power balance.
4	A	Calculation of short-circuit currents for each installation in which the sum of rated power of the energy sources which may be connected contemporaneously to the network is greater than 500 kVA (kW).
5	A	Where the maximal short-circuit current on the main bus-bar is expected to exceed 50 kA for the main switch-board, justification of the main bus-bar and bracket strength related to induced electro-magnetic forces (except junction bars to the interrupting and protective devices).
6	A	List of circuits including, for each supply and distribution circuit, data concerning the nominal current, the cable type, length and cross-section, nominal and setting values of the protective and control devices.
7	A	Single line diagram and detailed diagram of the main switchboard.
8	A	Single line diagram and detailed diagram of the emergency switchboard, if any.
9	A	Diagram of the most important section boards or motor control centres (above 100 kW).
10	A	Diagram of the supply for monitoring and control systems of propulsion motors and generator prime movers.
11	A	Diagram of the supply, monitoring and control systems of the rudder propellers.
12	A	Diagram of the supply, monitoring and control systems of controllable pitch propellers.
13	A	Diagram of the general emergency alarm system, of the public address system and other intercommunication systems.
14	A	Detailed diagram of the navigation-light switchboard.
15	A	Diagram of the remote stop system (ventilation, fuel pump, fuel valves, etc.).
16	A	List of batteries including type and manufacturer, voltage and capacity, location and equipment and/or system(s) served, maintenance and replacement schedule (when used for essential and emergency services).
17	A **(2)**	Single line diagram.
18	A **(2)**	Principles of control system and its power supply.
19	A **(2)**	Alarm and monitoring system including: • list of alarms and monitoring points • power supply diagram.
20	A **(2)**	Safety system including: • list of monitored parameters for safety system • power supply diagram.
21	I **(2)**	Arrangements and details of the propulsion control consoles and panels.
22	I **(2)**	Arrangements and details of electrical coupling.
23	I **(2)**	Arrangements and details of the frequency converters together with the justification of their characteristics.
24	I **(2)**	Arrangements of the cooling system provided for the frequency converter and motor enclosure.

(1) A : To be submitted for approval
I : To be submitted for information.
(2) For electric propulsion installations.

3.6 Limited explosion risk electrical apparatus

3.6.1 Limited explosion risk electrical apparatus means:

- an electrical apparatus which, during normal operation, does not cause sparks or exhibits surface temperatures which are above the required temperature class, including e.g.:
  - three-phase squirrel cage rotor motors
  - brushless generators with contactless excitation
  - fuses with an enclosed fuse element
  - contactless electronic apparatus, or
- an electrical apparatus with an enclosure protected against water jets (degree of protection IP55) which during normal operation does not exhibit surface temperatures which are above the required temperature class.

SECTION 2 GENERAL DESIGN REQUIREMENTS

1 Environmental conditions

1.1 General

1.1.1 The electrical components of installations are to be designed and constructed to operate satisfactorily under the environmental conditions on board.

Different conditions may be accepted by the Society in the case of vessels intended for restricted service.

In particular, the conditions shown in the tables in this Article are to be taken into account.

Note 1: The environmental conditions are characterised by:

- one set of variables including climatic conditions (e.g. ambient air temperature and humidity), conditions dependent upon chemically active substances (e.g. salt mist) or mechanically active substances (e.g. dust or oil), mechanical conditions (e.g. vibrations or inclinations) and conditions dependent upon electromagnetic noise and interference, and
- another set of variables dependent mainly upon location on vessels, operational patterns and transient conditions.

1.2 Ambient air temperatures

1.2.1 All electrical machinery, appliances, cables and accessories are to be selected, designed and constructed for satisfactory performance under the ambient temperatures in Tab 1.

Where other conditions are likely, proper account shall be taken of these.

Table 1 : Ambient air temperature

Location	Temperature range, in °C	
Enclosed spaces - in general	0	+ 40
Enclosed spaces - tropical zone	0	+ 45
Fitted on machinery components, boilers, in spaces subject to higher or lower temperatures	According to specific local conditions	
Exposed decks - in general	– 20	+ 40
Exposed decks - tropical zone	– 20	+ 45

1.3 Humidity

1.3.1 The humidity ranges shown in Tab 2 are applicable in relation to the various locations of installation.

Table 2 : Humidity

Location	Humidity
General	95% up to 40°C 70% above 40°C
Air conditioned areas	Different values may be considered on a case-by-case basis

1.4 Water temperatures

All electrical machinery, appliances, cables and accessories are to be selected, designed and constructed for satisfactory performance under the ambient temperatures in Tab 3.

Where other conditions are likely, proper account shall be taken of these.

Table 3 : Water temperature

Coolant	Temperature range, in °C	
Water - in general	0	+ 25
Water - in tropical zone	0	+ 32

1.5 Inclinations

1.5.1 The inclinations applicable are those shown in Tab 4.

The Society may consider deviations from these angles of inclination taking into consideration the type, size and service conditions of the vessels.

Table 4 : Permanent inclination of vessel

Installations, components	Angle of inclination **(1)**	
	Athwartship	Fore and aft
Main and auxiliary machinery **(2)**	12°	5°

(1) Athwartship and fore-and-aft inclinations may occur simultaneously.

(2) Higher angle values may be required depending on vessel operating conditions.

1.6 Vibrations

1.6.1 Electrical machines and appliances shall be so constructed and installed that they will not be damaged by the vibrations and shaking occurring in normal shipboard service.

1.6.2 The natural frequencies of foundations, fastenings and suspensions for machines, appliances and electrical components (including those inside appliances) shall not lie within the frequency range 5 - 100 Hz.

1.6.3 If, for reasons of design, the natural frequency has unavoidably to lie within the aforementioned frequency range, the accelerations are to be sufficiently damped to exclude the likelihood of malfunctions or damage.

2 Quality of power supply

2.1 General

2.1.1 All the electrical appliances used on board shall be so designed and constructed that they remain serviceable despite the voltage and frequency variations occurring in normal onboard service. Unless otherwise specified, considerations may be based on the variations shown in Tab 5.

Networks or sub-networks with greater voltage variations may be approved for consumers intended for operation with greater variations.

Table 5 : Voltage and frequency variations

	Variable	Variations	
		Permanent	Transient
General	Frequency Voltage	± 5% + 6% – 10%	± 10% 5s ± 20% 1,5s
Battery operation	Voltage	± 20%	–

2.1.2 In equipment with electronic frequency converters, the voltage waveform may deviate from that specified in Ch 2, Sec 3, [2.6.1] provided that measures are taken to ensure that this does not interfere with the operation of consumers or other equipment such as radio and navigation facilities.

If necessary, converters or similar means should be used for separation from the mains.

2.1.3 Harmonic distortion

The total harmonic distortion shall be less than or equal to 5%.

3 Electromagnetic susceptibility

3.1 General

3.1.1 For electronic type components such as sensors, alarm panels, automatic and remote control equipment, protective devices and speed regulators, the conducted and radiated disturbance levels to be assumed are those given in Part C, Chapter 3.

Note 1: See also IEC Publication 60533 - "Electromagnetic Compatibility of Electrical and Electronic Installations in ships.

3.1.2 Electrical and electronic equipment on the bridge and in the vicinity of the bridge, not required neither by the Rules and liable to cause electromagnetic disturbance, shall be of type which fulfill the test requirements of test specification NR467, Pt C, Ch 3, Sec 6, Tab 1, tests 19 and 20.

4 Materials

4.1 General

4.1.1 The materials used for the construction of electrical machines, cables and appliances shall be resistant to moist air and oil vapours. They shall not be hygroscopic and shall be flame-retardant. The dimensions of minimum creep distances and air clearances are to conform to IEC 60664-1 or EN 60664-1. Relaxations may be allowed for installations up to 50 V.

5 Protective measures

5.1 Protection against electric shock

5.1.1 Direct contact

Protection against direct contact includes all the measures designed to protect persons against the dangers arising from contact with live parts of electrical appliances. Live parts are deemed to be conductors and conductive parts of appliances which are live under normal operating conditions.

Electrical appliances shall be so designed that the person cannot touch or come dangerously close to live parts, in way of the determined operation.

Protection against direct contact may be dispensed with in the case of equipment using safety voltage.

In service spaces, live parts of the electrical appliances shall remain protected against accidental contact when doors and covers which can be opened without a key or tool are opened for operation purposes.

5.1.2 Indirect contact

Electrical appliances shall be made in such a way that persons are protected against dangerous contact voltages even in the event of an insulation failure.

For this purpose, the construction of the appliances shall incorporate one of the following protective measures:

- Protective earthing (see Ch 2, Sec 12, [2])
- Protective insulation (double insulation)
- Operation at very low voltages presenting no danger even in the event of a fault.

The additional usage of Residual Current Protective Devices is allowed except for steering and propulsion plant.

5.2 Protection against explosion hazard

5.2.1 General

Amount and ignition protection of approved electrical equipment in zone 0, zone 1 and zone 2 may be restricted in the different areas where they are used. The relevant current construction Rules have to be observed for this reason.

Regarding hazardous areas and approved electrical equipment on vessels for the carriage of dangerous goods, see Part D, Chapter 3.

For batteries room, see Ch 2, Sec 7.

5.2.2 Hazardous areas, zone 0

These areas include for instance the insides of tanks and piping with a combustible liquid with a flash point ≤ 60°C, or inflammable gases.

For electrical installations in these areas the permitted equipment that may be fitted is:

- intrinsically safe circuits Ex ia
- equipment specially approved for use in this zone by a test organisation recognised by the Society.

Cables in hazardous areas zone 0 shall be armoured or screened, or run inside a metal tube.

5.2.3 Hazardous areas, zone 1

These areas include e.g.:

- paint rooms
- storage battery rooms
- areas with machinery, tanks or piping for fuels with a flash point ≤ 60°C, or inflammable gases, see [5.2.6]
- ventilation trunks.

Areas subject to explosion hazard zone 1 also include tanks, vessels, heaters, pipelines etc. for liquids or fuels with a flash point > 60°C, if these liquids are heated to a temperature higher than 10°C below their flash point.

Electrical equipment shall not be installed or operated in areas subject to explosion hazard, with the exception of explosion-protected equipment of a type suitable for shipboard use. Electrical equipment is deemed to be explosion-protected, if they are manufactured to a recognized standard such as IEC 60079 publications or EN 50014-50020, and if they have been tested and approved by a testing authority recognized by the Society. Notes and restrictions at the certificate have to be observed.

Certified safe type equipment listed in Tab 6 is permitted.

Cables in hazardous areas zone 1 shall be armoured or screened, or run inside a metal tube.

Table 6 : Certified safe type equipment

Intrinsic safety	Ex i
Flameproof enclosure	Ex d
Pressurized apparatus	Ex p
Increased safety	Ex e
Special type of protection	Ex s
Oil immersion	Ex o
Encapsulation	Ex m
Sand filled	Ex q

5.2.4 Extended hazardous areas, zone 2

Areas directly adjoining zone 1 lacking gastight separation from one another are allocated to zone 2.

For equipment in these areas protective measures are to be taken which, depending on the type and purpose of the facility, could comprise e.g.:

- use of explosion-protected facilities, or
- use of facilities with type Ex n protection, or
- use of facilities which in operation do not cause any sparks and whose surfaces, which are accessible to the open air, do not attain any unacceptable temperatures, or
- facilities which in a simplified way are overpressure-encapsulated or are fumetight-encapsulated (minimum protection type IP 55) and whose surfaces do not attain any unacceptable temperatures.

5.2.5 Electrical equipment in paint rooms

In the above-mentioned rooms (zone 1) and in ventilation ducts supplying and exhausting these areas, electrical equipment shall be of certified type as defined in [5.2.3] and comply at least with II B, T3.

Switches, protective devices and motor switchgear for electrical equipment in these areas shall be of all-poles switchable type and shall preferably be fitted in the safe area.

Doors to paint rooms have to be gastight with self-closing devices without holding back means.

5.2.6 Electrical equipment in pipe tunnels

All equipment and devices in pipe tunnels containing fuel lines or adjoining fuel tanks shall be permanently installed irrespective of the flash point of the fuels. Where pipe tunnels directly adjoin tanks containing combustible liquids with a flash point ≤ 60°C, e.g. in ore or oil carriers, or where pipes inside these tunnels convey combustible liquids with a flash point ≤ 60°C, all the equipment and devices in pipe tunnels shall be certified explosion-protected in accordance with [5.2.3] (zone 1).

5.3 Protection against combustible dust hazard

5.3.1 Only lighting fittings with IP 55 protection, as a minimum requirement, may be used in areas where ignitable dusts may be deposited.

In continuous service, the surface temperature of horizontal surfaces and surfaces inclined up to 60° to the horizontal shall be at least 75 K below the glow temperature of a 5 mm thick layer of the dust.

6 Construction

6.1 General

6.1.1 All electrical apparatus is to be so constructed as not to cause injury when handled or touched in the normal manner.

6.1.2 The design of electrical equipment is to allow accessibility to each part that needs inspection or adjustment, also taking into account its arrangement on board.

6.1.3 Enclosures are to be of adequate mechanical strength and rigidity.

6.1.4 Enclosures for electrical equipment are generally to be of metal; other materials may be accepted for accessories such as connection boxes, socket-outlets, switches and luminaries. Other exemptions for enclosures or parts of enclosures not made of metal will be specially considered by the Society.

6.1.5 Cable entrance are not to impair the degree of protection of the relevant enclosure (see Tab 7).

6.1.6 All nuts and screws used in connection with current-carrying parts and working parts are to be effectively locked.

6.1.7 All equipment is generally to be provided with suitable, fixed terminal connectors in an accessible position for convenient connection of the external cables.

6.2 Degree of protection of enclosures

6.2.1 The type of protection or enclosure of every machine and every other item or equipment shall be compatible with the site where it is installed. The particulars in Tab 7 are minimum requirements.

Table 7 : Minimum degrees of protection

Type of space	Minimum type of protection (in accordance with IEC Publication 60529)							
	Generators	Motors	Transformers	Switchboards, consoles, distribution boards	Measuring instruments	Switchgear	Installation material	Lamp fittings
Service spaces, machinery and steering gear spaces	IP 22	IP 22	IP 22	IP 22 **(1)**, **(2)**	IP 22	IP 22 **(1)**, **(2)**	IP 44	IP 22
Refrigerated holds		IP 44		IP 44		IP 44	IP 55	IP 55
Cargo holds		IP 55		IP 55		IP 55	IP 55	IP 55
Storage battery, paint storage and lamp room								IP 44 **(3)** and (EX)
Ventilating trunks (deck)		IP 44					IP 55	
Exposed deck, steering stations on open deck		IP 55		IP 55	IP 55	IP 55	IP 55	IP 55
Closed wheelhouse		IP 22	IP 22	IP 22	IP 22	IP 22	IP 22	IP 22
Accommodation and public rooms				IP 22			IP 20 IP 55 **(4)**	IP 20
Sanitary facilities and commissary spaces		IP 44	IP 44	IP 44			IP 55	IP 44

(1) IP 12 for appliances generating a large amount of heat.

(2) Where the class of protection is not provided by the appliance itself, the site at which it is installed must have the level of protection stated in the Table.

(3) Electrical appliance of certified safety, e.g. in accordance with IEC Publication 60079 or EN 50014-50020.

(4) Where laid behind ceiling.

SECTION 3 SYSTEM DESIGN

1 Supply systems and characteristics of the supply

1.1 Supply systems

1.1.1 As a general principle, systems listed in [1.1.2] to [1.1.4] are permitted.

1.1.2 For direct current and single-phase alternating current:

a) two conductors, one of which is earthed

b) single conductors with hull return, restricted to systems of limited extent (e.g. starting equipment of internal combustion engines and cathodic corrosion protection)

c) two conductors insulated from the vessel's hull.

1.1.3 For 3-phase alternating current:

a) four conductors with earthed neutral and no hull return

b) three conductors insulated from the hull

c) three conductors with hull as neutral conductor, however, not in final subcircuits.

1.1.4 Other systems have to be approved by the Society in each case.

1.1.5 Systems using the hull as neutral conductor are not permitted:

a) on tankers (see Pt D, Ch 3, Sec 3, [8] and Pt D, Ch 3, Sec 2, [8])

b) on floating craft or vessels whose hull can be dismantled.

The power supply lines from one barge to another in pusher tug trains shall be insulated on all poles.

1.2 Characteristics of the supply

1.2.1 General

The use of standard voltages and frequencies is recommended.

Generators may have rated voltages up to 5% higher than the rated voltage of the consumers.

1.2.2 Maximum voltages

The operating voltages indicated in Tab 1 may not be exceeded.

In special installations (e.g. radio equipment and ignition equipment) higher voltages are permitted subject to compliance with the necessary safety measures.

Table 1 : Maximum permissible operating voltages

Type of installation	Maximum permissible operating voltage		
	DC	1-phase AC	3-phase AC
Power and heating installations including the relevant sockets	250 V	250 V	690 V
Lighting, communications, command and information installations including the relevant sockets	250 V	250 V	–
Sockets intended to supply portable devices used on open decks or within narrow or damp metal lockers, apart from boilers and tanks:			
• in general	50 V **(1)**	50 V **(1)**	–
• where a protective circuit-separation transformer only supplies one appliance	–	250 V **(2)**	–
• where protective-insulation (double insulation) appliances are used	250 V	250 V	–
• where ≤ 30 mA default current circuit breakers are used	–	250 V	690 V
Mobile power consumers such as electrical equipment for containers, motors, blowers and mobile pumps which are not normally moved during service and whose conducting parts which are open to physical contact are grounded by means of a grounding conductor that is incorporated into the connecting cable and which, in addition to that grounding conductor, are connected to the hull by their specific positioning or by an additional conductor	250 V	250 V	690 V
Sockets intended to supply portable appliances used inside boilers and tanks	50 V **(1)**	50 V **(1)**	–

(1) Where that voltage comes from higher voltage networks galvanic separation shall be used (safety transformer).

(2) All of the poles of the secondary circuit shall be insulated from the ground.

2 Sources of electrical power

2.1 General

2.1.1 Every power supply system on vessels shall comprise at least one main and one auxiliary power source.

2.2 Design

2.2.1 The power source may take the form of:

a) Two diesel sets

Special restrictions for the supply of steering gear systems are given in Ch 2, Sec 10, [1.4.8].

b) One diesel set and one power supply battery (in accordance with item c))

c) One generator driven by the main propulsion unit (shaft generator) is accepted as a main source provided a power supply battery is installed as the auxiliary source.

This design may be accepted if, in all sailing and manoeuvring conditions, including propeller being stopped, this generator is not less effective and reliable than an independent generating set.

The power supply battery shall be capable of supplying essential consumers for at least 30 minutes automatically and without intermediate recharging.

It shall be possible to recharge the battery with the means available on board even when the main engine is stationary, e.g. by using charging generators (lighting dynamos) driven by auxiliary machinery or by shore power via a battery charger.

d) Other energy generating systems can be permitted by the Society.

2.3 Power balance

2.3.1 A power balance for main and emergency system for the electrical plant shall be furnished as proof that the rating of the power source (generator, battery, solar panels, etc.) is sufficient.

2.3.2 The power requirements are to be determined for day/night running service and emergency supply, if any.

2.3.3 A table is to be compiled listing all the installed electrical consumers together with their individual power ratings:

a) Account is to be taken of the full power rating of those consumers permanently required for the operation of the vessel.

b) The installed capacity of consumers kept in reserve is to be listed. The consumption of those consumers which operate only following the failure of a unit of the same kind need not be included in the calculation.

c) The aggregate power consumption of all consumers intermittently connected to the supply is to be multiplied by a common simultaneity factor and the result added to the sum of the permanently connected consumers.

The simultaneity factor may be applied only once in the course of the calculation.

2.3.4 Consumers with a relatively high power consumption, such as the drive units of bow thrusters, are to be included in the calculation at their full rating even though they may be used only intermittently.

2.3.5 The sum of the loads represented by items a) and c), with due allowance for the battery charging capacity, is to be used when deciding the generator rating.

2.3.6 Unless some other standby capacity such as a floating battery is available, some spare capacity is to be designed into the system to cover short-lived peak loads like those caused by the automatic start-up of large motors.

2.4 Emergency power source on passenger vessels

2.4.1 For emergency power source on passenger vessels, see Pt D, Ch 1, Sec 6, [5.2].

2.5 DC generators

2.5.1 The following may be used to supply DC shipboard networks:

- regulated single or 3-phase AC generators connected to a rectifier
- compound-wound generators
- shunt generators with automatic voltage regulator.

2.5.2 Generators shall be designed so that, even with the battery disconnected, their voltage characteristic and harmonic content remain within the prescribed limits over the whole load range and they themselves suffer no damage. They should be so designed that a short circuit at the terminals produces a current not less than three times the rated current. They shall be able to withstand the sustained short-circuit current for 1 second without suffering damage. Exemptions from these requirements may be granted subject to proof in each instance that the selective disconnection of short circuits in the vessel's network is assured at even lower sustained short-circuit currents, possibly in conjunction with a parallel-connected power supply battery.

The regulator characteristic of the generators shall ensure that connected power supply batteries are without fail fully charged over the whole load range and overcharging is avoided.

2.6 Single and 3-phase AC generators

2.6.1 Generator design

The apparent output of 3-phase generators shall be rated such that no unacceptable voltage dips occur in the shipboard supply as a result of the starting currents affecting normal operation. On no account may the start-up of the motor with the greatest starting current give rise to an undervoltage causing consumers already in service to cut out.

The waveform of the no-load phase-to-phase voltage should be sinusoidal as far as possible. The deviation from the sinusoidal fundamental wave should at no time be greater than 5% in relation to the peak value of the fundamental wave.

The root-mean-square (r.m.s.) values of the phase voltage with symmetrical loading shall not vary from each other by more than 0,5%.

If the neutral points of generators running in parallel are connected, the waveforms of the phase voltages should coincide as nearly as possible. The use of generators of the same type is recommended. As a general principle, it is necessary to ensure that the equalizing current determined by the harmonic content does not exceed 20% of the rated current of the machine with the lowest capacity.

The generators and their exciters are to be so designed that for two minutes the generator can be loaded with 150% of its rated current with an inductive power factor of 0,5 while approximately maintaining the rated voltage. Generators may suffer no damage as a result of a short-circuit and the short circuits which may occur in the supply network in later service. The design shall take account of the short time delay of the generator switches which is necessary to the selectivity of the system and during which the short-circuit current is sustained.

With voltage-regulated generators it is necessary to ensure that an input data failure cannot lead to unacceptable high terminal voltages.

2.6.2 Conditions

Under balanced load conditions, 3-phase alternators and their exciters are required to meet the following conditions:

a) Steady conditions

When the alternator is operated with the associated prime mover, the voltage shall not deviate from the rated value by more than ± 2,5% from no-load up to the rated output and at the rated power factor after the transient reactions have ceased. For this purpose the prime mover shall be set to its rated speed at rated output.

b) Transient control conditions

With the generator running at rated speed and rated voltage, the voltage shall not deviate below 85% or above 120% of its rated value as the result of the sudden connection or disconnection of balanced loads with a specified current and power factor. It shall regulate within the limits stated in item a) in not more than 1,5 seconds. Under test conditions, the generator may in this connection be driven at practically constant speed, e.g. by a suitable electric motor.

Unless the client specifies particular load changes, the above requirements are to be satisfied under the following conditions:

- the idling generator, excited to its rated voltage, is to be suddenly connected to a load equal to 60% of its rated current with a (lagging) power factor not greater than 0,4
- once steady-state control conditions have been attained, the load is to be suddenly disconnected.

c) Sustained short-circuit current

The sustained short-circuit current at a single, two or 3-phase terminal short shall not be less than three times the rated current. The generator and its exciter shall be able to carry the sustained short-circuit current for a period of one second without suffering damage.

Exemptions from these requirements may be granted subject to proof in each instance that the selective disconnection of short circuits in the vessel's network is assured at even lower sustained short-circuit currents.

2.6.3 Three-phase AC generators for parallel operation

Where generators of the same output are run in parallel with the active load shared equally, the reactive power of each machine shall not deviate from its percentage share by more than 10% relative to its rated reactive power.

Where the generators differ in output, the deviation from the proportional share within the aforementioned load range shall not exceed the smaller of the following values, assuming proportionally equal sharing of the active load:

a) 10% of the rated reactive power of the largest machine

b) 25% of the rated reactive power of the smallest machine.

2.7 Generator prime movers

2.7.1 Design and control

The design and control of generator prime movers are to conform to Ch 1, Sec 2.

2.7.2 Parallel operation

The governing characteristics of prime movers in the case of single or 3-phase alternator sets of the same output operating in parallel shall ensure that, over the range from 20% to 100% of the total active power, the share of each machine does not deviate from its proportionate share by more than 15% of its rated active power.

Where the units are differently rated, the deviation from the proportionate share within the load range stated shall not exceed the lesser of the following values:

a) 15% of the rated active power of the largest machine

b) 25% of the rated active power of the smallest machine.

2.7.3 Cyclic irregularity

The permissible cyclic irregularity is to be agreed upon between the prime mover and generator manufacturers. The following is to be ensured:

a) faultless parallel operation of 3-phase generators

b) regular or irregular load variations shall not give rise to fluctuations in active power output exceeding 10% of the rated output of the machine concerned

c) practically non-flicker lighting at all working speeds.

2.8 Special rules

2.8.1 Notwithstanding the conditions set out above, other speed and control characteristics may be approved for generators with outputs of up to 10 kW (kVA) provided that troublefree operation remains assured.

Where generators are backed up by floating batteries it is necessary to ensure that the absence of the battery voltage cannot damage the generators and controllers.

3 Distribution

3.1 Subdivision of the distribution network

3.1.1 Consumers are to be arranged in sections or consumer groups. The following main groups are to be supplied separately:

- lighting circuits
- power plants
- heating plants
- navigation, communication, command and alarm system.

3.2 Hull return

3.2.1 In systems using hull return, the final subcircuits for space heating and lighting are to be insulated on all poles.

3.2.2 The earth for the hull return connection is to be formed by connecting the earth busbar in the main or subsidiary distribution board to the vessel's hull.

3.2.3 The earth connection shall be located in an easily accessible position so that it can easily be tested and disconnected for the purpose of testing the insulation of the circuit.

3.2.4 Earth connections shall be at least equal in cross-section of the supply leads. Bare leads may not be used. Casings and their retaining bolts may not be used for the earth return or for connecting the return lead to the vessel's hull.

3.2.5 The connecting surface of the cable lug shall be metallically clean. The cable lug is to be tinned. The terminal screws are to be made of brass and are to be compatible with the cable cross-sections. The smallest permissible size is M 6.

3.3 Final subcircuits

3.3.1 Final lighting subcircuits and plug socket circuits within the accommodation and day rooms are to be fitted with fuses rated for not more than 16 A. The load on each lighting subcircuit shall not exceed 10 A.

The number of lighting points supplied by a final sub-circuit shall not exceed the numbers given in Tab 2.

Table 2 : Maximum number of lighting points

Voltage	Maximum number of lighting points
up to 55 V	10
from 56 V to 120 V	14
from 121 V to 250 V	24

3.3.2 Plug sockets (outlets) are to be connected to separate circuits wherever possible.

Final subcircuits for lighting in accommodation spaces may, as far as practicable, include socket outlets.

In that case, each socket outlet counts for 2 lighting points.

3.3.3 In main machinery spaces and other important service spaces and control stations, the lighting shall be supplied by at least two different circuits.

The lamps are to be so arranged that adequate lighting is maintained even if one of the circuits fails.

3.4 Navigation lights and signal lamps

3.4.1 The switchboard for navigation lights and signal lamps shall be mounted in the wheelhouse and shall be supplied by a separate cable from the main switchboard, if no change-over to a separate feeder is provided.

3.4.2 Navigation light, each shall be individually supplied, protected and controlled from the navigation lights switchboard.

3.4.3 The navigation lights switchboard may be enlarged to provide connections for other signal lamps. No other consumers may be connected to this switchboard.

3.4.4 A number of locally grouped signal lamps may be jointly supplied, controlled and monitored provided that the monitoring system indicates or signals the failure of even one such lamp.

3.4.5 The switchboard is to be fitted with a device which indicates or signals the extinction of a navigation light. Where pilot lamps are used as indicators, special precautions shall be taken to ensure that the navigation light is not extinguished if the pilot lamp burns out.

3.4.6 Navigation lights shall be designed for the standard voltages: 24 V, 110 V or 220 V.

3.4.7 The voltage at the lamp socket shall not permanently deviate by more than 5% above or below the standard voltages mentioned in [3.4.6].

3.5 Shore connection

3.5.1 General

Shore line terminal containers are to be connected to the main switchboard by a permanently laid cable.

Consequences of mooring breaks on the shore connection are to be considered. It shall not lead to critical damages on the installation.

3.5.2 Connection equipment

The shore connection is to be protected at the main switchboard by a switch or contactor with control switch and fuses or a power circuit breaker with overload protection. Switch, contactor or power circuit breaker are to be interlocked with the generator circuit in such a way as to prevent the vessel's generator operating in parallel with the shore mains.

When using plug-type shore connectors with a current rating of more than 16 A, an interlocking (mechanical or electrical) with a switching device is to be provided ensuring that a connection / disconnection is not possible when the plug is "live".

Figure 1 : Shore connection

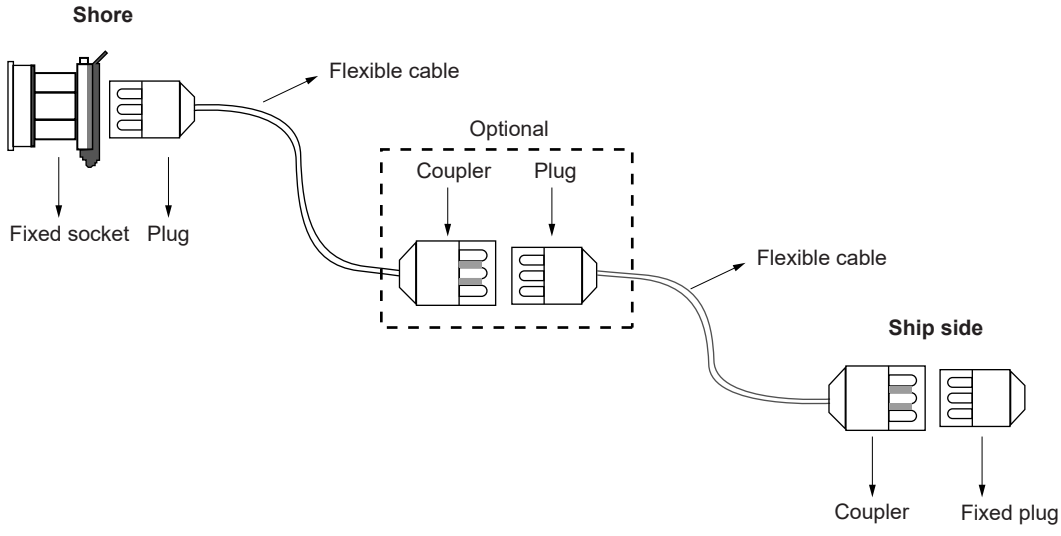

In mechanical interlocking, a mechanical lock ensures that the switch associated with the socket is closed only when the plug has been fully engaged and the plug can be disconnected only when the switch is opened again. Electrical interlocking is achieved by supplying the coil of an upstream contactor by means of additional wires and pilot contacts throughout the circuit. Short-circuit protection at the connection can then be dispensed with.

In order to prevent contact with live parts, plug-type shore connectors are to be designed as appliance connectors comprising a coupler plug mounted on board and a coupler socket supplied from the shore, as indicated in Fig 1.

With a connecting voltage of more than 50 V a provision is to be made for connecting the vessel's hull to earth. The connection point shall be marked.

On vessels with DC-power system with hull return the negative pole of the shore side power source shall be connected to the vessel's hull.

The main switchboard is to be equipped with an indicator showing whether the shore connection cable is live.

Instruments shall be available for comparing the polarity of a DC power supply or the phase sequence of a 3-phase power supply from the shore with that of the vessel's network. The installation of a phase change overswitch is recommended.

The following details are to be given on a data plate in the shore line terminal box:

- kind of current, rated voltage and frequency for alternating current
- the concerning measures are to be taken for the shore connection.

To reduce the load on the terminals, the shore line is to be provided with a tension relief device.

Only flexible, oil-resistant and flame retardant cables are to be used as feeder cables.

3.6 Power supply to other vessels

3.6.1 A separate junction box is to be provided in the case of supplying power to other vessels. The branch is to be fitted with fuses and an on-load switch or with a power circuit breaker with overcurrent and short-circuit protection. Where voltages of more than 50 V and/or currents of more than 16 A are transmitted, it is necessary to ensure that connection and disconnection can only be made in the dead condition. Where a connecting line carrying a voltage of more than 50 V is wrenched out of its connector, it shall immediately be deenergized by a forcing circuit. The same applies to a rupture of the connecting cable.

Vessel hulls have to be conductively connected.

Facilities have to be provided to allow this.

Connecting cable suspensions shall be tension-relieved.

SECTION 4 ROTATING MACHINES

1 Construction

1.1 General

1.1.1 Unless otherwise stated in the following Rules, all motors and generators shall conform to a standard accepted by the Society.

1.1.2 In conjunction with the protective equipment to be provided, generators shall be capable of withstanding the dynamic and thermal stresses produced by a short circuit. All machines are to be so designed and constructed that the permissible temperature rises stated in Tab 1 are not exceeded.

The insulation classes have to correspond to the ratings IEC 60085.

In the case of laminated insulations, the highest temperature permitted for each individual insulating material shall not be exceeded.

All windings shall be effectively protected against the effects of moist or salty air and oil vapours.

On DC machines, the commutating pole windings are to be connected symmetrically to the armature, wherever possible. Anti-interference capacitors are to be connected directly to the armature terminals. Anti-interference capacitors on generators shall have built-in cutouts.

1.1.3 The carbon brushes shall be compatible with the slip-ring and commutator materials and, in the case of the latter, with the commutating conditions.

The working position of the brushholder is to be clearly marked.

1.1.4 The terminals shall be located in an easily accessible position and shall be dimensioned to suit the cross-section of the cables to be connected. The terminals are to be clearly marked.

The class of protection shall match that of the machine and shall be at least IP 44.

Exceptions to this Rule may be permitted for machines with a working voltage of 50 V or less.

1.1.5 The manufacturer shall provide every generator and motor with a name and data plate containing the machine's serial number and all essential operating data.

1.1.6 Commutators, sliprings and, wherever possible, windings shall be easily accessible for the purposes of inspection, maintenance and repair. On larger machines with plain bearings it shall be possible to check the air gap.

2 Testing of electrical machines

2.1 Workshop certificates

2.1.1 For generators and electrical motors with rated power less than 50 kVA or 50 kW, which have not been tested in the presence of a Surveyor, workshop certificates are to be submitted.

2.2 Scope of tests

2.2.1 Temperature rise test (heat test)

a) A heat test shall be performed until the steady-state temperature corresponding to the required mode of operation is reached. The steady-state temperature pass for reached when the temperature rises by not more than 2 K per hour.

   Machines with separate cooling fans, air filters and heat exchangers shall be tested together with this equipment. The heat run shall be completed with the determination of the temperature rise. The maximum permissible values shown in Tab 1 shall not be exceeded.

b) An extrapolation of the measured values to the disconnection time (t = 0) is not necessary if the reading takes place within the following periods:

   - up to 50 kVA/kW 30 s
   - over 50 up to 200 kVA/kW 90 s
   - over 200 up to 5000 kVA/kW 120 s

c) Heat tests on machines of identical construction made not more than 3 years previously can be recognized.

   The referenced temperature rise shall be at least 10% lower than that listed in Tab 1.

The following tests shall be carried out at approximately normal operating temperatures.

2.2.2 Load characteristics

On generators the voltage and on motors the speed is measured as a function of the applied load.

2.2.3 Overload test

a) For generators:

   1,5 times the rated current for two minutes

b) For standard motors:

   1,6 times the rated torque for 15 seconds. During the test, the motor speed may not drop below its pull out speed

c) For windlass motors:

   1,6 times the rated torque for 2 minutes. Overload tests already performed on motors of identical construction may be recognized.

   The current of the operating stage corresponding to twice the rated torque shall be measured and indicated on the rating plate.

Table 1 : Permitted temperature-rises of air cooled machines at an ambient temperature of 40°C (difference values in K)

No.	Machinery component	Method of measurement **(1)**	Insulation class				
			A	E	B	F **(2)**	H **(2)**
1	AC windings of machines	R	60	75	80	105	125
2	Commutator windings	R	60	75	80	105	125
3	Field windings of AC and DC machines with DC excitation, other than those specified under 4	R	60	75	80	105	125
4	a) Field windings of synchronous machines with cylindrical rotors having DC excitation winding, embedded in slots except synchronous induction motors	R	–	–	90	110	130
	b) Stationary field windings of DC machines having more than one layer	R	60	75	80	105	125
	c) Low-resistance field windings of AC and DC machines and compensation windings of DC machines having more than one layer	R Th	60	75	80	100	120
	d) Single-layer field windings of AC and DC machines with exposed bare or varnished metal surfaces and single-layer compensation windings of DC machines	R Th	60	80	90	110	130
5	Permanently short-circuited, insulated windings	Th	60	75	80	100	120
6	Permanently short-circuited, uninsulated windings	The temperature rises of these parts shall in no case reach such values that there is a risk of injury to any insulation or other material on adjacent parts or to the item itself					
7	Iron cores and other parts not in contact with windings						
8	Iron cores and other parts in contact with windings	Th	60	75	80	100	120
9	Commutators and slip rings, open or closed	Th	60	70	80	90	110
10	Plain bearings	measured in the lower bearing shell or in the oil sump after shutdown		50			
11	Roller bearings	measured in the lubrication nipple bore or near the outer bearing seat		50			
	Roller bearings with special grease			80			
12	Surface temperature			Reference 40 **(3)**			

(1) R = resistance method
Th = thermometer method.

(2) The values may need correction in the case of high-voltage AC windings.

(3) Higher temperature rises may be expected on electrical machines with insulation material for high temperatures. Where parts of such machinery may be accidentally touched and there is a risk of burns (above 80°C), the Society reserves the right to request means of protection, such as a handrail, to prevent accidental contacts.

2.2.4 Short-circuit test on 3-phase AC generators

a) On all synchronous generators, the steady short-circuit current shall be determined with the exciter unit in operation (see Ch 2, Sec 3, [2.6.2], item c).

b) A short-circuit withstand test may be demanded:

- to determine the reactances
- if there is any concern regarding mechanical and electrical strength.

Synchronous generators which have undergone a short-circuit withstand test shall be thoroughly examined after the test for any damage.

2.2.5 High-voltage test (winding test)

a) The test voltage shall be as shown in Tab 2.

It shall be applied for one minute for each single test. The voltage test shall be carried out between the windings and the machine housing, the machine housing being connected to the windings not involved in the test. This test shall be performed only on new, fully assembled machines fitted with all their working parts. The test voltage shall be a practically sinusoidal AC voltage at system frequency.

The maximum anticipated no-load voltage or the maximum system voltage is to be used as reference in determining the test voltage.

b) Any repetition of the voltage test which may be necessary shall be performed at only 80% of the nominal test voltage specified in Tab 2.

Table 2 : Test voltages for the winding test

No.	Machine or machinery component	Test voltage (r.m.s) dependent on rated voltage U of the subject winding, in V
1	Insulated windings of rotating machines of output less than 1 kW (kVA), and of rated voltages less than 100 V with the exception of those in items 3 to 6	2U + 500
2	Insulated windings of rotating machines with the exception of those in item 1 and items 3 to 6	2U + 1000, with a minimum of 1500
3	Separately excited field windings of DC machines	1000 + twice the maximum excitation voltage but not less than 1500
4	Field windings of synchronous generators, synchronous motors and rotary phase converters:	
	a) Rated field voltage up to 500 V over 500 V	 10 times the rated voltage, with a minimum of 1500 4000 + twice rated field voltage
	b) When a machine is intended to be started with the field winding short-circuited or connected across a resistance of value less than ten times the resistance of the winding	10 times the rated field voltage, minimum 1500, maximum 3500
	c) When a machine is intended to be started either with the field winding connected across a resistance of value equal to or more than ten times the resistance of the winding, or with the field windings on open-circuit with or without a field dividing switch	1000 + twice the maximum value of the r.m.s. voltage, which can occur under the specified starting conditions, between the terminals of the field winding, or in the case of a sectionalized field winding between the terminals of any section, with a minimum of 1500
5	Secondary (usually rotor) windings of induction motors or synchronous induction motors if not permanently short-circuited (e.g. if intended for rheostatic starting)	
	a) For non-reversing motors or motors reversible from standstill only	1000 + twice the open-circuit standstill voltage as measured between slip rings or secondary terminals with rated voltage applied to the primary windings
	b) For motors to be reversed or braked by reversing the primary supply while the motor is running	1000 + four times the open circuit secondary voltage as defined in item 5 a)
6	Exciters	
	a) Apart from the exceptions in b) and c)	as for the windings to which they are connected
	b) Exception 1: Exciters of synchronous motors (including synchronous induction motors) if connected to earth or disconnected from the field windings during starting	twice rated exciter voltage + 1000, with a minimum of 1500
	c) Exception 2: Separately excited field windings of exciters	as under item 3

2.2.6 Overspeed test

As proof of mechanical strength, a two minute overspeed test is to be carried out as follows:

a) For generators with their own drive:

at 1,2 times the rated speed

b) For generators coupled to the main propulsion system:

at 1,25 times the rated speed

c) For constant-speed motors:

at 1,2 times the no-load speed

d) For variable-speed motors:

at 1,2 times the maximum no-load speed

e) For motors with series characteristics:

at 1,2 times the maximum speed shown on the name plate, but at least at 1,5 times the rated speed.

The overspeed test may be dispensed with in the case of squirrelcage induction motors.

2.2.7 Measurement of insulation resistance

Measurement of insulation resistance is to be performed, wherever possible, on the machine at service temperature at the end of the test schedule. The test is to be carried out using a DC voltage of at least 500 V. The minimum insulation resistance shall be not less than 1 Megohm.

2.3 Testing in the presence of a Surveyor

2.3.1 All electrical machines are to be tested at the manufacturer's works. When test procedure is not specified, requirements of IEC 60034 apply.

2.3.2 All generators and electrical motors with an output of 50 kVA or 50 kW and over are to be of type approved and tested at the manufacturer's works in the presence of a Surveyor.

The Society reserves the right to stipulate that a works test be performed on new types of machines which are to be installed for the first time on a vessel with class or where there are special grounds for specifying such a test.

Individual tests may be replaced by type tests.

SECTION 5 TRANSFORMERS

1 General

1.1 General requirements

1.1.1 Transformers are to be installed in well ventilated locations or spaces. Transformers with exposed live parts are to be installed in special spaces accessible only to the responsible personnel. The installation of liquid-cooled transformers requires the Society's special approval.

1.1.2 As a general principle, the primary and secondary windings of transformers are to be separated electrically. For the adjustment of the secondary voltage, taps are to be provided corresponding to ± 2,5% of the rated voltage.

Starting transformers are excepted from this rule.

1.1.3 Power transformers have to be tested according to IEC 60076.

Transformers with a power rating of 50 kVA or more are to undergo a test at the manufacturer's works in the presence of a Surveyor.

Individual tests may be replaced by One's Own Responsibility Test made by the manufacturer.

1.1.4 The manufacturer is to fit to transformers/reactors a name and date plate containing the serial number of the unit and all essential operating data.

SECTION 6 SEMICONDUCTOR CONVERTERS

1 Constructional and operational requirements

1.1 Construction

1.1.1 Semiconductor converters are generally to comply with the requirements for switchgear assemblies (see Ch 2, Sec 8).

1.1.2 The design of semi-conductor converters is to comply with the requirements of IEC Publication 60146-1-1 with applicable requirements modified to suit marine installations like e.g. environmental requirements stated in Ch 2, Sec 2.

1.1.3 The design of semi-conductor converters for power supply is to comply with the requirements of IEC 62040 serie (see [2]).

1.1.4 The design of semi-conductor converters for motor drives is to comply with the requirements of IEC 61800 serie.

1.1.5 The monitoring and control circuits are generally to comply with the requirements of Part C, Chapter 3.

1.1.6 For liquid-cooled converters the following provisions are to be satisfied:

- liquid is to be non-toxic and of low flammability
- drip trays or other suitable means are to be provided to contain any liquid leakages
- the resistivity of the cooling fluid in direct contact with semiconductor or other current carrying parts is to be monitored and an alarm initiated if the resistivity is outside the specified limits.

1.1.7 Where forced cooling is used, the temperature of the heated cooling medium is to be monitored.

If the temperature exceeds a preset value an alarm is to be given and the shutdown of the converter is to be activated.

1.1.8 Where forced (air or liquid) cooling is provided, it is to be so arranged that the converter cannot be or remain loaded unless effective cooling is maintained.

Alternatively, other effective means of protection against overtemperature may be provided.

1.1.9 Stacks of semiconductor elements, and other equipment such as fuses, or control and firing circuit boards etc., are to be so arranged that they can be removed from equipment without dismantling the complete unit.

1.1.10 Semiconductor converters are to be rated for the required duty having regard to the peak loads, system transient and overvoltage and to be dimensioned so as to withstand the maximum short-circuit currents foreseen at the point of installation for the time necessary to trip the protection of the circuits they supply.

1.2 Protection

1.2.1 Semiconductor elements are to be protected against short-circuit by means of devices suitable for the point of installation in the network.

1.2.2 Overcurrent or overvoltage protection is to be installed to protect the converter. When the semiconductor converter is designed to work as an inverter supplying the network in transient periods, precautions necessary to limit the current are to be taken.

1.2.3 Semiconductor converters are not to cause distortion in the voltage wave form of the power supply at levels exceeding the voltage wave form tolerances at the other user input terminals (see Ch 2, Sec 2, [2.1.3]).

1.2.4 An alarm is to be provided for tripping of protective devices against overvoltages and overcurrents in electric propulsion converters and for converters for the emergency source of power.

1.3 Parallel operation with other power sources

1.3.1 For converters arranged to operate in parallel with other power sources, load sharing is to be such that under normal operating conditions overloading of any unit does not occur and the combination of paralleled equipment is stable.

1.4 Temperature rise

1.4.1 The permissible limit of temperature rise of the enclosure of the semiconductors is to be assessed on the basis of an ambient air temperature of 45°C or sea water temperature of 32°C for water-cooled elements, taking into account its specified maximum permissible temperature value.

1.4.2 The value of the maximum permissible temperature of the elements at the point where this can be measured (point of reference) is to be stated by the manufacturer.

1.4.3 The value of the mean rated current of the semiconductor element is to be stated by the manufacturer.

1.5 Insulation test

1.5.1 The test procedure is that specified in IEC Publication 60146.

1.5.2 The effective value of the test voltage for the insulation test is to be as shown in Tab 1.

Table 1 : Test voltages for high voltage test on static converters

$\frac{U_m}{\sqrt{2}} = U$ in V **(1)**	Test voltage, in V
U ≤ 60	600
60 < U ≤ 90	900
90 < U	2 U + 1000 (at least 2000)
(1) U_m: highest crest value to be expected between any pair of terminals.	

2 Requirements for uninterruptible power system (UPS) units as alternative and/or transitional power

2.1 Definitions

2.1.1 Uninterruptible power system (UPS)

Combination of converters, switches and energy storage means, for example batteries, constituting a power system for maintaining continuity of load power in case of input power failure (see IEC Publication 62040).

2.1.2 Off line UPS unit

A UPS unit where under normal operation the output load is powered from the bypass line (raw mains) and only transferred to the inverter if the bypass supply fails or goes outside preset limits. This transition will invariably result in a brief (typically 2 to 10 ms) break in the load supply.

2.1.3 Line interactive UPS unit

An off-line UPS unit where the bypass line switch to stored energy power when the input power goes outside the preset voltage and frequency limits.

2.1.4 On line UPS unit

A UPS unit where under normal operation the output load is powered from the inverter, and will therefore continue to operate without break in the event of the supply input failing or going outside preset limits.

2.2 Design and construction

2.2.1 UPS units are to be constructed in accordance with IEC 62040, or an acceptable and relevant national or international standard.

2.2.2 The operation of the UPS is not to depend upon external services.

2.2.3 The type of UPS unit employed, whether off-line, line interactive or on-line, is to be appropriate to the power supply requirements of the connected load equipment.

2.2.4 An external bypass is to be provided.

2.2.5 The UPS unit is to be monitored and audible and visual alarm is to be given in a normally attended location for:

- power supply failure (voltage and frequency) to the connected load
- earth fault
- operation of battery protective device
- when the battery is being discharged
- when the bypass is in operation for on-line UPS units.

2.3 Location

2.3.1 The UPS unit is to be suitably located for use in an emergency.

2.3.2 UPS units utilising valve regulated sealed batteries may be located in compartments with normal electrical equipment, provided the ventilation arrangements are in accordance with the requirements of IEC 62040 or an acceptable and relevant national or international standard.

2.4 Performance

2.4.1 The output power is to be maintained for the duration required for the connected equipment.

2.4.2 No additional circuits are to be connected to the UPS unit without verification that the UPS unit has adequate capacity.

2.4.3 The UPS battery capacity is, at all times, to be capable of supplying the designated loads for the time specified in the regulations.

2.4.4 On restoration of the input power, the rating of the charge unit shall be sufficient to recharge the batteries while maintaining the output supply to the load equipment.

3 Testing

3.1 General

3.1.1 Converters intended for essential services are to be subjected to the tests stated in [3.2].

3.1.2 The manufacturer is to issue a test report giving information on the construction, type, serial number and all technical data relevant to the converter, as well as the results of the tests required.

3.1.3 In the case of converters which are completely identical in rating and in all other constructional details, it will be acceptable for the rated current test and temperature rise measurement stipulated in [3.2] not to be repeated.

3.1.4 The tests and, if appropriate, manufacture of converters of 50 kVA and over intended for essential services are to be attended by a Surveyor of the Society.

3.2 Tests on converters

3.2.1 Converters are to be subjected to tests in accordance with Tab 2.

Type tests are the tests to be carried out on a prototype converter or the first of a batch of converters, and routine tests are the tests to be carried out on subsequent converters of a particular type.

3.2.2 The electronic components of the converters are to be constructed to withstand the tests required in Ch 3, Sec 6.

3.2.3 Final approval of converters is to include complete function tests after installation on board, performed with all ship's systems in operation and in all characteristic load conditions.

3.3 Additional testing and survey for uninterruptible power system (UPS) units as alternative and/or transitional power

3.3.1 UPS units of 50 kVA and over are to be surveyed by the Society during manufacturing and testing.

3.3.2 Appropriate testing is to be carried out to demonstrate that the UPS unit is suitable for its intended environment. This is expected to include as a minimum the following tests:

- functionality, including operation of alarms
- ventilation rate
- battery capacity.

3.3.3 Where the supply is to be maintained without a break following a power input failure, this is to be verified after installation by practical test.

Table 2 : Tests to be carried out on static converters

No	Tests	Type test **(1)**	Routine test **(2)**
1	Examination of the technical documentation, as appropriate, and visual inspection **(3)** including check of earth continuity	X	X
2	Light load function test to verify all basic and auxiliary functions	X	X
3	Rated current test	X	
4	Temperature rise measurement	X	
5	Insulation test (dielectric strength test and insulation resistance measurement)	X	X
6	Protection of the converters in case of failure of forced cooling system	X	X

(1) Type test on prototype converter or test on at least the first batch of converters.

(2) The certificates of converters routine tested are to contain the manufacturer's serial number of the converter which has been type tested and the test result.

(3) A visual examination is to be made of the converter to ensure, as far as practicable, that it complies with technical documentation.

SECTION 7 STORAGE BATTERIES AND CHARGERS

1 General

1.1 Application

1.1.1 These regulations apply to permanently installed storage batteries.

1.1.2 Storage batteries may be of the Lead-acid or Nickel-Cadmium type, due consideration being given to the suitability for any specific application.

1.1.3 Other types of storage batteries of satisfactorily proven design may be accepted provided they are suitable for vessels use to the satisfaction of the Society.

1.1.4 Storage batteries have to be in compliance with and tested according to recognised standards, e.g.:

- IEC 60896-11 or IEC 60896-21,22, for Lead-acid batteries
- IEC 60622, IEC 60623 or IEC 62259, for Nickel-Cadmium batteries.

1.1.5 For storage batteries location, see Ch 2, Sec 11, [4].

2 Design and construction of cells

2.1 General

2.1.1 Cells shall be so designed that they retain their normal operation at inclination of up to 15° and no electrolyte leaks out at inclination of up to 40°. Cells should be combined in cabinets, containers or racks if the weight of single cells allows this.

The weight of a battery or battery element shall not exceed 100 kg.

3 Data plate and operation instructions

3.1 General requirements

3.1.1 Each battery or battery element shall be marked with maker's name and type of battery, containing all relevant data for operation.

3.1.2 For each type of battery an operation manual shall be delivered. It shall contain all informations for proper maintenance and operation.

4 Installation

4.1 General requirements

4.1.1 Storage batteries are to be installed in such a way that they are accessible for cell replacement, inspection, testing, topping-up and cleaning.

The installation of batteries in the accommodation area, in cargo holds and wheelhouses is not permissible. Gastight batteries can be seen as an exception, e.g. in case of internal power source of emergency lighting fittings.

4.1.2 Storage batteries are not to be installed in locations where they are exposed to unacceptably high or low temperatures, spray or other effects liable to impair their serviceability or reduce their life essentially. They are to be installed in such a way, that adjacent equipment is not damaged by the effects of escaping electrolyte vapours.

4.1.3 Lead-acid batteries and alkaline storage batteries are not to be installed in the same room or in the immediate vicinity of each other.

4.1.4 Measures are to be taken to prevent storage batteries from shifting. The braces used shall not impede ventilation.

4.1.5 For the installation of storage batteries the total power of associated charger has to be considered.

The charging power is to be calculated from the maximum current of the battery charger and the rated voltage of the battery.

For automatic IU-charging, the charging power may be calculated as stated under Ch 2, Sec 11, [4.2.3].

5 Battery room equipment

5.1 General requirements

5.1.1 Only explosion protected lamps, switches, fan motors and space heating appliances shall be installed in Battery Rooms. The following minimum requirements shall be observed:

- explosion group II C
- temperature class T 1.

Other electrical equipment is permitted only with the special approval of the Society.

5.1.2 Where leakage is possible, the inner walls of Battery rooms, cabinets and containers shall be protected against the injurious effects of the electrolyte.

6 Starter batteries

6.1 General requirements

6.1.1 Storage batteries for starting internal combustion engines shall be designed to have sufficient capacity for at least six starting operations in 30 minutes without intermediate recharging.

6.1.2 Starter batteries shall be capable of being recharged with the means available on board and may only be used to start engines and supply energy to the monitoring systems allocated to them.

6.1.3 Starting internal combustion engines with the vessel's supply battery is permitted only in emergencies.

6.1.4 Wherever possible storage batteries used for starting and preheating internal combustion engines are to be located close to the machines.

7 Rating of storage battery chargers

7.1 General requirements

7.1.1 Charging equipment shall be so rated that discharged storage batteries can be charged to 80% of their rated capacity within a period not greater than 15 hours without exceeding the maximum permissible charging currents.

Only automatic chargers shall be used with charging characteristic adapted to the type of batteries.

If consumers are simultaneously supplied during charging, the maximum charging voltage shall not exceed 120% of the rated voltage. The power demand of the consumers shall be considered for the selection of the chargers.

7.2 Tests on chargers

7.2.1 Battery chargers are to be subjected to tests in manufacturer's work in accordance with Tab 1.

Type tests are the tests to be carried out on a prototype charger or the first of a batch of chargers, and routine tests are the tests to be carried out on subsequent chargers of a particular type.

7.2.2 Battery charger's with rating power of 2 kW upwards have to be tested in manufacturer's work in the presence of the Society's Surveyor.

Table 1 : Tests to be carried out on battery chargers

No.	Tests	Type test **(1)**	Routine test **(2)**
1	Examination of the technical documentation, as appropriate, and visual inspection **(3)** including check of earth continuity	X	X
2	Functional tests (current and voltage regulation, quick, slow, floating charge, alarms)	X	X
3	Temperature rise measurement	X	
4	Insulation test (dielectric strength test and insulation resistance measurement)	X	X

(1) Type test on prototype battery charger or test on at least the first batch of battery chargers.

(2) The certificates of battery chargers routine tested are to contain the manufacturer's serial number of the battery charger which has been type tested and the test result.

(3) A visual examination is to be made of the battery charger to ensure, as far as practicable, that it complies with technical documentation.

SECTION 8 SWITCHGEAR AND CONTROLGEAR ASSEMBLIES

1 Switchboards

1.1 General rules

1.1.1 Switchboards shall contain all the gear, switches, fuses and instruments necessary for operating and protecting the generators and main power distribution systems. They shall be clearly, easily and safely accessible for the purposes of maintenance, repair or renewal.

1.1.2 Built-in gear, instruments and operating equipment are to be indelibly marked. The current ratings of fuses and the response values of protective devices are to be indicated.

1.1.3 The replacement of fuse elements shall be possible without removing panels or covers. Different voltages and types of current are to be clearly indicated.

1.1.4 Where switchgear or fuses carrying a voltage of more than 50 V are located behind doors, the live parts of appliances mounted on the door (switches, pilot lights, instruments) shall be protected against being touched by accident (see Ch 2, Sec 2, [5.1]).

1.1.5 Busbars and bare connections shall be made of copper. Even under adverse operating conditions, their temperature rise may not exceed 40°C. Busbars are to be fastened and secured in such a way that they are able to withstand the mechanical stresses produced by the greatest possible short-circuit currents.

1.1.6 All screwed joints and connections are to be secured against spontaneous loosening. Screws up to M 4 size may be secured with lacquer or enamel.

1.1.7 With the exception of the connections between switchgear and outgoing terminals, switchboards may only contain lines with cross-sections of up to 50 mm^2. If larger cross-sections are required, a main busbar system is to be provided for connecting generators and consumers.

1.1.8 The power feed for the control of consumers is to be picked up on the consumer side downstream of the main fuses. Exceptions will be permitted only in special cases.

1.1.9 Where fuses and switches are used, the sequence shall be busbar - fuse - switch.

1.1.10 Neutral conductors in 3-phase systems shall have at least half the cross-section of the outer conductors. For line cross-sections of up to 16 mm^2, neutral conductors shall have the full cross-section of the outer conductors. Equalizer lines for 3-phase alternator exciters shall be designed to carry half the exciting current of the largest alternator and shall be laid separately from other lines.

1.1.11 The smallest permissible cross-section for wiring inside the switchboard, including measuring wires and control lines, is generally 0,5 mm^2. Smaller cross-sections are allowed only in automation and telecommunication equipment and for data bus/data cables. Lines without fuse protection from the main busbar to fuses and protective switches shall be as short as possible not longer than 1 m. They may not be laid and fastened together with other lines.

Shunt circuits within the switchboard shall be laid separately from other lines and shall generally not be protected by fuses.

Important control lines shall be laid and protected in such a way they cannot be damaged by arcing due to switching operations or, as far as possible, short-circuits.

1.1.12 It shall be possible to observe meters and indicators and to operate the switchgear from the front of the switchboard with the doors closed.

1.1.13 Operating handles shall generally not be located less than 300 mm above floor level. The operating handles of generator switches are to be located at a distance of at least 800 mm from the floor.

1.2 Distribution boards

1.2.1 The Rules set out in [1.1] apply in analogous manner.

1.2.2 Where a number of distribution boards are supplied via a common feeder cable without intermediate protection, the busbars and the connecting terminals shall be dimensioned to withstand the total load.

1.2.3 Distribution circuits shall be protected in accordance with [3.1] and [3.9] against damage due to short-circuit and overload. Final subcircuits with fuses rated at more than 63 A shall be fitted with on-load switches. On-load switches may be dispensed with in final subcircuits with fuses rated up to 63 A provided that each connected consumer can be disconnected by a switch located nearby.

1.2.4 Distribution boards for the supply of mobile consumers, e.g. container plug sockets shall be individually supplied from the distribution board and shall be individually fused and individually disconnectable.

A pilot light or voltmeter is to be provided to show whether the distribution board is live.

1.2.5 Motor switchgear shall be accessible for the purposes of inspection and repair without the need to disconnect other important circuits.

Mechanical devices, ammeters or indicator lights shall show whether the motor is switched on.

Motor switchgear units or their control switches are normally to be located close to their respective motors. Where for operational reasons they are placed out of sight of the motor, personnel working on the motor shall be provided with means of protecting themselves against the unauthorized switching on of the motor.

Motors shall be disconnected on all poles as a matter of principle.

1.3 Switchboard design assessment

1.3.1 The design assessment of switchboards may be carried out:

- either for a specific unit (DA), or
- using type approval procedure (TA).

1.4 Switchboard testing

1.4.1 Before being installed on board, every switchboard together with all its equipment is to be subjected to tests at the manufacturer's works.

1.4.2 A test at the manufacturer's works in the presence of a Society Surveyor is to be carried out on main switchboards for a connected generator output of more than 100 kW/kVA, and on all switchboards for emergency generator sets. The Society reserves the right to call for a works test on other switchboards where there are special reasons for this.

1.4.3 Operational test

As far as possible, the proper operation of the equipment is to be checked in accordance with the design.

1.4.4 High-voltage test

High-voltage test is to be performed for a period of one minute at the test voltage shown in Tab 1.

Measuring instruments and other ancillary equipment may be disconnected during the test.

Table 1 : Test voltages for main circuits

Rated insulation voltage Ui (V)	Test voltage A.C. (r.m.s) (V)
Ui ≤ 60	1000
60 < Ui ≤ 300	2000
300 < Ui ≤ 690	2500

1.4.5 Insulation resistance measurement

Insulation resistance measurement is to be performed using at least 500 V DC. For the purpose of this test, large switchboards may be divided into a number of test sections. The insulation resistance of each section shall be at least 1 MΩ.

2 Switchgear

2.1 General

2.1.1 As a general principle, switchgear shall be type approved, designed and constructed in accordance with standard IEC, EN or to other standards recognized by the Society.

2.2 Selection of switchgear

2.2.1 Switchgear is to be selected not merely by reference to its rated current but also on the basis of its thermal and dynamic strength and its making and breaking capacity.

On-load breakers shall be designed to carry at least the rated current of the series-connected fuse.

Circuit breakers shall act on all live conductors simultaneously. It shall be clearly apparent whether the breaker is in the open or closed position.

Installation switches in lighting systems up to 16 A are exempted from this rule.

2.3 Power circuit breaker

2.3.1 Power circuit breakers are to be provided with trip-free release. Their rated making and breaking capacity shall be sufficient to make or break short-circuit currents at the installation site.

2.4 Fuses

2.4.1 The fuse elements or cartridges shall have an enclosed fusion space. They shall be made of a ceramic material or a material recognized by the Society as equivalent. The fuse element shall be embedded in a heat-absorbing material.

2.4.2 It shall be possible to replace the fuse elements or cartridges without exposing the attendant to the danger of touching live components or suffering burns. Where grip-type fuses are used, a detachable grip is permissible.

3 Switchgear, protective and monitoring equipment

3.1 General

3.1.1 Generators, power consumers and circuits shall be protected in each one of their non-earthed poles or conductors against damage due to overload or short-circuit. In insulated DC and single-phase AC circuits and in insulated 3-phase circuits with balanced load, the overload protection may be dispensed with in one conductor.

3.1.2 The protective devices are to be coordinated in such a way that, in the event of a fault, only the defective circuit is disconnected and the supply to the sound circuits is maintained.

3.1.3 All non-earthed poles shall be connected and disconnected simultaneously. In earthed systems, lines are to contain neither switches nor fuses in their earthed pole or conductor.

3.2 Equipment for 3-phase AC generators

3.2.1 Switchgear and protective devices for individual operation 3-phase AC generators are to be provided with 3-pole power circuit breakers with delayed-action overcurrent trip and short-delayed short-circuit trip to obtain selectivity. This protective equipment is to be designed as follows:

a) The overload trip, which is to be set at an overcurrent of between 10% and 50%, shall open the power circuit breaker with a maximum time delay of two minutes.

   A setting of more than 50% overcurrent may be approved if required by the operating conditions and compatible with the generator or primemover design.

b) The short-circuit trip is to be set at an overcurrent of more than 50% but less than the sustained short-circuit current. It shall operate with a short delay of up to about 500 ms adjusted to suit the selectivity of the system.

c) On generators rated at less than 50 kVA, fuses and contactors or on-load switches may be used provided that the requirements of a) and b) are satisfied in an analogous manner. For this purpose the contactors shall also have a delayed drop-out.

   The contactors are to be designed for at least twice the rated generator current.

3.2.2 Switchgear and protective devices for parallel operation

The following equipment is to be provided in addition to the switchgear and protective devices specified in [3.2.1].

a) 3-phase AC generators rated at 50 kVA and above shall be provided with reverse-power protection with a time delay of 2 to 5 seconds.

   The protective device shall be selected and adjusted to suit the characteristics of the prime mover. Reference values for the setting are 4% to 10% of the rated current for diesel-driven generators. The protection should, wherever possible, be set to 50% of the prime mover trailing power. A voltage drop to 60% of the rated voltage shall not render the reverse-power protection ineffective within the specified range.

b) The generator switches shall be fitted with undervoltage protection which prevents the contact assemblies from closing when the generator is deenergized. If the voltage drops to between 70% and 35% of the rated voltage, the generator switch shall open automatically. Undervoltage trips shall have a short time delay matched to the short-circuit trip called for in [3.2.1], item b).

c) A synchronizing device is to be fitted. Where automatic synchronizing equipment is fitted, provision shall also be made for manual independent synchronization.

d) In the case of parallel operating generators with individual output rating of more than 50 kVA, protection is to be provided against the effects of paralleling the generators when in phase opposition.

   For example, the following may be used for this purpose:

   - a reactor which limits to a permissible degree the electrical and mechanical stresses arising from faulty synchronization. It is to be disconnected when the generator switch is closed, or
   - a synchronizing interlock which allows the generator switch to cut in only up to an angular deviation of 45° (electrical) maximum, and also blocks the connection in case of too large a difference frequency. The permissible difference frequency depends on the characteristics of the generator switch and its drive and shall not generally exceed 1 Hz.

3.3 Equipment for DC generators

3.3.1 Switchgear and protective devices for individual operation

a) DC generators are generally to be provided with power circuit breakers with delayed-action overcurrent trip and short-delayed short-circuit trip to obtain selectivity. The switchgear and protective devices are to conform to [3.2.1] (for individual operation) with the difference that the short-circuit trip is to have a short time delay of up to 200 ms.

b) A polarity-reversing facility, if necessary.

3.3.2 Switchgear and protective devices for parallel operation

The following equipment is to be provided in addition to the switchgear and protective devices specified in [3.3.1]:

a) DC generators equipped for parallel operation with each other or with a storage battery shall be fitted with reverse-current protection with no-delay action or with a short delay of up to 1 second.

   The protective device shall be selected and adjusted to suit the characteristics of the prime mover. Reference values for the setting are 4% to 10% of the rated output for diesel-driven generators.

b) Undervoltage protection as described in [3.2.2], item b) for parallel operation.

c) In the case of compound-wound generators, the power circuit breaker shall be provided with an equalizer circuit contact assembly which, on making, closes simultaneously with, or in advance of, the contacts of the power circuit breaker and, on breaking, opens simultaneously with, or after, the contacts of the power circuit breaker, and is designed to carry at least half the rated current.

3.4 Special rules

3.4.1 On-load switches, power circuit breakers and, generally speaking, reverse-current cutouts can be dispensed with in the case of generators with outputs of up to 10 kW (kVA) and a voltage of 50 V or less which, because of their control equipment, do not need to be subjected to switching operations in service. Further exemptions may be allowed depending on the design of the equipment.

3.5 Disconnection of non-essential consumers

3.5.1 It is recommended that a device be installed which, when the generator reaches its rated output, emits a warning signal after about 5 s and automatically cuts off consumers whose temporary disconnection will not jeopardize the safety of the vessel and its machinery installation. The disconnection of the loads may be effected in one or more steps. The automatic disconnection of non-essential consumers is mandatory on larger passenger vessels and on vessels with automated engine operation.

3.6 Measuring and monitoring equipment

3.6.1 The measuring error of switchboard instruments may not exceed 1,5% of the scale terminal value. Directionally sensitive instruments are to be used for DC generators and storage batteries.

The scale of voltmeters shall cover at least 120% of the rated voltage, that of ammeters at least 130% of the maximum amperage to be expected in continuous operation. Ammeters are to be designed to avoid damage due to motor starting currents.

The scale of watt meters shall cover at least 120% of the rated power. For generators operating in parallel, the scale shall also cover at least 12% of the reverse power. In the case of power meters with only one current path, the measurement shall be performed in the same phase on all generators. Where the total power input to all consumers connected to one phase reaches more than 10% of the output of the smallest alternator, the power meters shall be equipped with multiple movements to register also the unbalanced load on the outer conductors.

Frequency meters are to be capable of registering deviations of down to ± 5 Hz from the rated frequency.

The main switchboard (main distribution board) is to be provided with ammeters for major consumers, unless these are mounted at the consumers themselves. One instrument may be used for more than one circuit. The rated currents are to be marked on the instrument scales, or on a separate panel in the case of multi-circuit instruments with change-over switch. The rated service values are to be marked in red on the scales of all instruments.

Appropriate digital means of measuring and monitoring equipment is acceptable taking into account above mentioned scales for voltage, current, power and frequency measurement.

3.6.2 Generator measuring and monitoring equipment

a) Each DC generator is to be provided with:
   - 1 voltmeter
   - 1 ammeter
   - 1 blue pilot light (generator live).

   Where circuit breakers are used, the following additional lights are to be provided:
   - 1 green pilot light (circuit breaker closed)
   - 1 red pilot light (circuit breaker open).

b) Battery
   - 1 centre zero ammeter.

c) Bus-bar
   - 1 voltmeter.

d) Each 3-phase AC generator is to be provided with:
   - 1 voltmeter, where necessary capable of switching to the other generators
   - 1 ammeter, connectable to each phase conductor
   - 1 wattmeter (active power meter) for generators with outputs of 50 kVA and over
   - 1 frequency meter, where necessary capable of switching to the other generators
   - Pilot lights as specified in item a) for DC generator.

3.6.3 Special rules

Instead of the ammeter and the blue pilot light specified in item b), a charging pilot light may be provided for installations with an output of up to 10 kW/kVA and a voltage ≤ 50 V.

3.6.4 Protection of generator monitoring and control circuits

The following circuits are to be supplied by the generator direct and are to be individually fused (using fusible cutouts):

- generator protective relay and generator switch undervoltage trip
- measuring instruments
- synchronizing equipment
- pilot lights
- speed adjuster
- electrical generator switch drive
- automatic power supply system (measuring voltage).

3.6.5 Earth fault indication

Every non-earthed primary or secondary system is to be equipped with devices for checking the insulation resistance against vessel's hull.

Where filament lamps are used as indicators, their power input may not exceed 15 W. The lamps may be earthed only during testing by means of a pushbutton switch.

An insulation monitoring system may be dispensed with in the case of secondary circuits such as control circuits.

3.6.6 Insulation monitoring equipment

Where insulation monitoring devices are used, they shall provide a continuous indication of the insulation resistance and shall trip an alarm if the insulation resistance of the network drops below 100 Ω per volt of the network voltage.

With a full earth fault the measuring current may not exceed 30 mA.

3.7 Transformer protection

3.7.1 The windings of transformers shall be protected against short circuit and overload by multi-pole power circuit breakers or by fuses and on-load switches in accordance with the above Rules. Transformers for parallel operation shall be fitted with isolating switches on the secondary side.

Overload protection primary side may be dispensed with where it is protected on the secondary side.

3.8 Motor protection

3.8.1 Motors rated at more than 1 kW shall be individually protected against overloads and short circuits.

For steering gear motors see Ch 2, Sec 10, [1].

It is permissible to provide common short-circuit protection for a motor and its own individual supply cable.

The protective devices shall be suited to the particular operating modes of the motors concerned and shall provide reliable thermal protection in the event of overloads.

If the current-time characteristic of the overload protection is not compatible with the starting characteristics of a motor, the overload protection may be disabled during start-up. The short-circuit protection shall remain operative.

The switchgear of motors whose simultaneous restarting on restoration of the voltage after a power failure might endanger the operation of the installation shall be fitted with a facility which:

- interrupts the circuit in response to a voltage drop or power failure and prevents automatic restarting, or
- causes the motor to start up again automatically without any inadmissible starting current on restoration of the voltage. Where necessary, the automatic restarting of a number of motors is to be staggered in time.

The undervoltage protection shall work reliable between 70% and 35% of the rated voltage.

3.9 Circuit protection

3.9.1 Every distribution circuit shall be protected against damage due to overloads and short circuits by means of multi-pole power circuit breakers or fuses in accordance with [3.8]. Final subcircuits supplying power to a consumer fitted with its own overload protection may be provided with only short-circuit protection at the feed point. Under continuous service conditions fuses for this purpose may be two stages higher than for the rated service of the consumer in question; for short-period and intermittent service, the rated current of the fuse may not be greater than 160% of the rated consumer current. The corresponding switches are to be designed for the rated amperage of the fuse.

For steering gear circuits see Ch 2, Sec 10, [1]. Automatic cutouts and protective motor switches shall, where necessary, be backed up by the series-connected fuses specified by the manufacturer. In the case of important consumers, automatic cutouts without selectively staggered disconnecting delay may not be arranged in series.

3.10 Storage battery protection

3.10.1 Batteries, except starter batteries, shall be provided with short-circuit protection situated near the batteries, but not in battery's cabinet or container. Emergency batteries supplying essential services may only be provided with short-circuit protection sufficient for their cables. The value of the fuses may be two stages higher than the corresponding values for the rated cable current shown in Ch 2, Sec 9, Tab 2 and Ch 2, Sec 9, Tab 3, column 3, or of power circuit breakers with suitably adjusted short-circuit protection.

3.11 Protection of measuring instruments, pilot lights and control circuits

3.11.1 Indicators, measuring instruments and pilot lights are to be protected by fuses. Pilot lights with operating voltage over 24 V are to be fused separately from control circuits in every case so that a short circuit in the lamp does not cause failure of the control circuits. Pilot lights connected via short-circuit-proof transformers may be fused jointly with control circuits.

3.12 Exciter circuits

3.12.1 Exciter circuits and similar circuits whose failure might endanger the operation of essential systems may not be protected, or may be protected only against short circuits.

3.13 Emergency disconnecting switches

3.13.1 Oil burner equipment, fuel pumps, boiler fans, separators, machinery space and pump room ventilators shall be provided with an individual emergency disconnecting switch located at a central position outside the machinery space unless other means are available for rapidly interrupting the fuel and air supply outside the room in which the equipment is installed.

4 Control and starting equipment

4.1 Operating direction of handwheels and levers

4.1.1 Handwheels and levers of starters and drum controllers not intended for reversing are to be arranged to turn clockwise for starting the motors. Motor speed and generator voltage control is to be so effected that clockwise rotation increases the speed/voltage. The linear movement of handles upwards or to the right shall produce the same effect as clockwise rotation.

4.2 Hand-operated controllers, resistors

4.2.1 The temperatures of handles and other parts which have to be touched in order to operate equipment may not exceed the following values in service:

- metal parts: 50°C
- insulating material: 60°C.

Resistor casings whose temperature is liable to exceed 60°C are to be so mounted that they cannot be touched by accident.

The temperature rise of the air flowing from the casing may not exceed 165°C in the case of resistors integral to starters and controllers or 190°C for separately mounted resistors.

SECTION 9 CABLES

1 General

1.1

1.1.1 All electrical cables and insulated wiring used on board are to be of type approved. As a general principle, the use of the types of cables and wires according to IEC 60092 is permitted. In addition, equivalent cables and lines may be approved by the Society.

1.1.2 Except for lighting and space heating, only cables with multi-strand conductors are to be used.

1.1.3 The voltage rating of a cable may not be less than the rated working voltage of the relevant circuit.

In insulated distribution systems the outer conductor voltage of the system is to be deemed to be the rated voltage of the cable between a conductor and the vessel's hull, because in the event of a fault, e.g. outer conductor shorting to earth, this voltage may occur for a prolonged period between an intact outer conductor and the vessel's hull.

2 Choice of cables

2.1 Temperatures

2.1.1 In positions liable to be subjected to high ambient temperatures, only cables whose permissible temperature is at least 10 K above the maximum ambient temperature to be expected may be used. A correction factor is to be applied to the permissible loading (see Tab 1).

Cables on diesel engines, heaters etc. liable to be exposed to high temperatures are to be routed so that they are protected against excessive external heating. If this is not possible, oil-resistant cables with high heat resistance are to be used. Cables not previously used are to be submitted to the Society for approval before installation.

2.2 Fire resistance

2.2.1 Cables and insulated wires shall be flame-retardant (IEC 60332) and self-extinguishing.

2.3 Cable sheaths

2.3.1 On open decks, in damp or wet rooms, in service rooms and wherever condensation or harmful vapours (oil vapours) may occur, only cables with impermeable sheaths resistant to the environmental influences may be used.

PVC (polyvinyl chloride), CSP (chlorosulphonated polyethylene) and PCP (polychloroprene) sheaths are deemed to fall into this category, although they are unsuitable for long-term immersion in liquids.

Table 1 : Correction factors for cables in higher ambient temperatures

Maximum permissible conductor operating temperature		Ambient temperature				
		40°C	45°C	50°C	60°C	70°C
60°C	see Tab 2	1,00	0,87	0,71	–	–
85°C	see Tab 3	1,00	0,94	0,89	0,74	0,57

2.4 Movable connections

2.4.1 Machines or equipment mounted on rubber or spring vibration absorbers are to be connected via cables or wires with sufficient flexibility.

Mobile equipment is in all cases to be supplied by heavy, flame-retardant and oil-resistant rubber-sheathed flexible cords such as HO7RN-F-CENELEC HD 22 or equivalent.

For working voltages above 50 V, the movable connecting cables or wires for non-double-insulated equipment shall include an earthed conductor, which is to be specifically marked.

In spaces in the accommodation area, lightweight flexible cords are also permitted.

3 Determination of conductor cross-sections

3.1 General requirements

3.1.1 The sizes of cables and wires are to conform to the details in Tab 2 and Tab 3, unless other conductor cross-sections are necessitated by the permissible voltage drop for particular equipment items (see [3.1.3]) or by the elevated ambient temperature or by a special permissible working temperature (see also [3.2.1]). See Tab 1 for the correction factor.

3.1.2 Parallel cables may be calculated with the sum of their permissible loads and may be fused in common provided that the current is equally shared between all the parallel cables.

In every case, only cables of the same cross-sectional area and length shall be used as parallel cables.

3.1.3 The cross-section of cables and wires is to be determined not only by reference to the permissible current load but also according to the permissible voltage drop. The voltage drop between the main switchboard and the most unfavourable point of the system under consideration may not exceed 5% for lighting or 7% for power and heating circuits. In the case of transient loads, caused for example by start-ups, it is necessary to ensure that the voltage drop in the cable does not occasion any malfunction of the system.

Table 2 : Current rating of cables with a maximum permissible conductor temperature of 60°C at an ambient temperature of 40°C

1	2	3	4	5	6	7
Nominal cross-section of the copper conductor (mm^2)	Continuous service		Short time service S 2 = 30 min.		Short time service S 2 = 60 min.	
	Max. permissible current (A)	Rated fuse current (A)	Max. permissible current (A)	Rated fuse current (A)	Max. permissible current (A)	Rated fuse current (A)
Single-core cables						
1,0	9	10	10	10	10	10
1,5	14	16	15	15	15	15
2,5	19	20	20	20	20	20
4	26	25	28	25	28	25
6	34	36	36	36	36	36
10	46	50	49	50	49	50
16	62	63	66	63	66	63
25	82	80	87	80	87	80
35	101	100	108	100	107	100
50	126	125	136	160	134	160
70	156	160	171	160	165	160
95	189	160	217	224	202	200
120	219	224	251	250	234	224
150	251	250	294	300	271	250
185	287	250	353	315	311	300
240	337	315	420	–	371	–
300	388	355	500	–	435	–
Two-core cables						
1,0	8	6	9	10	9	10
1,5	11	10	12	16	12	16
2,5	17	16	18	20	18	20
4	22	20	23	25	23	25
6	29	25	31	25	31	25
10	39	36	41	36	41	36
16	53	50	60	63	56	63
25	70	63	83	80	75	80
Three or four-core cables						
1,0	6	6	7	10	7	10
1,5	9	10	10	10	10	10
2,5	14	16	15	16	15	16
4	18	20	19	20	19	20
6	24	25	25	25	25	25
10	32	36	36	36	34	36
16	43	36	50	50	46	50
25	57	50	70	63	60	63
35	71	63	88	80	75	80
50	89	80	115	100	100	100
70	109	100	151	125	125	125
95	132	125	194	200	161	160
120	153	160	234	225	161	200
5 to 24-core cables 1,5 mm^2						
5	8	6				
7	7	6				
10	6	6				
12	6	6				
14	6	6				
16	6	6				
19	5	4				
24	5	4				

Table 3 : Current rating of cables with a maximum permissible conductor temperature of 85°C at an ambient temperature of 40°C

1	2	3	4	5	6	7
Nominal cross-section of the copper conductor (mm^2)	Continuous service		Short time service S 2 = 30 min.		Short time service S 2 = 60 min.	
	Max. permissible current (A)	Rated fuse current (A)	Max. permissible current (A)	Rated fuse current (A)	Max. permissible current (A)	Rated fuse current (A)
Single-core cables						
1,0	17	16	18	16	18	20
1,5	22	20	23	20	23	20
2,5	30	25	32	25	32	36
4	40	36	42	36	42	50
6	52	50	55	50	55	63
10	72	63	76	63	76	80
16	96	100	102	100	102	100
25	127	125	135	125	135	160
35	157	160	168	160	166	224
50	196	200	212	224	208	250
70	241	224	264	300	255	300
95	292	300	327	315	311	315
120	338	315	387	–	362	–
150	389	400	455	–	420	–
185	443	425	532	–	481	–
240	522	500	650	–	574	–
300	600	630	765	–	672	–
Two-core cables						
1,0	14	10	15	16	15	16
1,5	19	20	20	20	20	20
2,5	26	25	28	25	28	25
4	34	36	36	36	36	36
6	44	36	47	50	47	50
10	61	63	65	63	65	63
16	82	80	93	100	87	100
25	108	100	127	125	115	125
Three or four-core cables						
1,0	12	10	13	16	13	16
1,5	15	16	16	16	16	16
2,5	21	20	22	25	22	25
4	28	25	30	36	30	36
6	36	36	38	36	38	36
10	50	50	56	63	53	50
16	67	63	75	80	71	63
25	89	80	110	100	96	80
35	110	100	138	125	120	100
50	137	125	178	160	153	125
70	169	160	235	224	194	160
95	205	200	300	300	250	250
120	237	224	365	315	296	300
5 to 24-core cables 1,5 mm^2						
5	13	10				
7	11	10				
10	10	10				
12	10	10				
14	9	6				
16	9	6				
19	8	6				
24	8	6				

3.2 Minimum cross-sections

3.2.1 The minimum cross-section of permanently laid cables and wires in power, heating, lighting systems and control circuits for power plants shall be 1,0 mm^2; in control circuits of safety systems 0,75 mm^2; in automation and telecommunication equipment 0,5 mm^2; in telecommunication systems not relevant to the safety of the vessel and for data bus/data cables 0,2 mm^2.

Within accommodation and day rooms, flexible leads with a conductor cross-section of 0,75 mm^2 and over may also be used for the mobile connection of appliances with a current input of up to 6 A.

3.3 Hull return conductors

3.3.1 See Ch 2, Sec 3, [3.2]

3.4 Protective earth wires

3.4.1 See Ch 2, Sec 12, [2]

3.5 Neutral conductors of 3-phase systems

3.5.1 The cross-section of neutral conductors of 3-phase systems is to equal at least half that of the outer conductors. Where the cross-section of the outer conductors is 16 mm^2 or less, the cross-section of the neutral conductor shall equal that of the outer conductors.

4 Cable overload protection

4.1 General requirements

4.1.1 All cables and wires with the exception of hull return, neutral and earthing conductors are to be fitted with fuses in accordance with Tab 2 and Tab 3.

4.1.2 Where protection is afforded by power circuit breakers with overcurrent and short-circuit trip, the overcurrent trip is to be set in accordance with the maximum permissible current loads shown in Tab 2 and Tab 3. The short-circuit trip shall be set to 4-6 times the indicated amperages.

For short-circuit protection, see also Ch 2, Sec 8, [3.9].

4.1.3 The exciter conductors of DC motors and DC generators operating in parallel may not be fitted with fuses except in the case of special installations. The exciter conductors of individually connected DC generators and 3-phase synchronous machines may be fused only where there are special grounds for doing so, e.g. where the cables are run through several of the vessel's main vertical zones.

5 Identification

5.1 General

5.1.1 Each cable is to have clear means of identification so that the manufacturer can be determined.

5.1.2 Fire non propagating cables are to be clearly labelled with indication of the standard according to which this characteristic has been verified and, if applicable, of the category to which they correspond.

SECTION 10 MISCELLANEOUS EQUIPMENT

1 Steering gear

1.1 General requirements

1.1.1 As a general principle, two steering gears, as constructionally independent as possible, are to be provided, i.e.:

- 1 main and 1 auxiliary steering gear system
- 2 main steering gear systems.

1.2 Definitions

1.2.1 Main steering gear system

The main steering gear system comprises all the system components needed to steer the vessel under normal design conditions.

1.2.2 Auxiliary steering gear system

The auxiliary steering gear system generally comprises equipment which, if the main steering gear system malfunctions, is able to assume its duty with reduced or equal capacity.

1.3 Design features

1.3.1 In general, all parts of main and auxiliary steering gears shall be designed in conformity with Ch 1, Sec 11.

1.3.2 The rated output of the electrical machinery is to be related to the maximum torque of the steering gear. For hydraulic steering gears, the rated output of the drive motors is to be determined by reference to the maximum pump delivery against the maximum pressure produced by the steering gear (safety valve setting) with due allowance for pump efficiency.

The stalling torque of the motor shall equal at least 1,6 times the rated torque.

Steering gear drive units shall comply at least with the following modes of operation:

a) Steering gears with intermitted power demand

S 6: 25% for converters and motors of electrohydraulic steering gears

S 3: 40% for motors of electromechanical steering gears

b) For steering gears with a constant power demand the machines are to be designed for continuous service S 1.

1.3.3 With power-driven steering gears, the auxiliary drive shall be largely independent of the main drive so that a failure in one system does not render the other one inoperative.

1.4 System requirements

1.4.1 Basically, systems may be differentiated as follows:

a) hydraulically driven main steering gear with electrohydraulic auxiliary steering gear

b) electrohydraulic main steering gear comprising two equivalent rudder drives

c) hydraulic main and auxiliary steering gear systems.

1.4.2 Electrical and electrohydraulic power unit shall be supplied via separate cable. The necessary fuse junctions and switchgear devices are to be housed in separate switch containers. If installed together in switchboards, they are to be suitably isolated from the feeder panels of other consumers.

1.4.3 The systems are to be so designed that each drive unit can be put into operation either individually or jointly from the wheelhouse. The feed for the remote control of the motor switchgear shall be taken from the appropriate supply fuse.

1.4.4 Where a system is supplied from a battery, a voltage monitor is to be fitted which acts with a time delay to trip a visual and audible alarm signal on the bridge if the supply voltage drops more than 10%.

1.4.5 If the auxiliary steering gear is supplied from a battery, the latter shall be capable of sustaining the supply for 30 minutes without intermediate recharging.

1.4.6 The changeover from the main to the auxiliary steering gear system shall be able to be effected within 5 seconds.

1.4.7 Following a power failure, the steering gear drive systems shall automatically re-start as soon as the power supply is restored.

1.4.8 If the steering gear is operated only by electrically driven power units or electrohydraulic power units, then at least one of the power units or rudder drives shall, in the event of failure of the vessel's network, be automatically supplied by a battery until an auxiliary diesel set has been started and has taken over the power supply.

The battery is not required, in case that the standby auxiliary diesel set starts automatically and takes over the power supply within 5 seconds after black-out.

1.4.9 Installations other than that described require the Society's special approval.

1.5 Protective equipment

1.5.1 The control circuits and motors of steering gear systems are to be protected against short circuits only.

1.5.2 Where fuses are used, their rated current is to be two stages higher than that corresponding to the rated current of the motors. However, in the case of motors for intermittent service, the value shall not be greater than 160% of their rated current.

1.5.3 Where power circuit breakers are used, their short-circuit quick release device shall be set at not more than 10 times the rated current of the electric drive motor.

Thermal trips are to be disabled or are to be set to twice the rated current of the motor.

1.5.4 Control circuits shall be fused for at least twice the maximum circuit current rating.

They are to be located on the load side of the main fuse of the electrical drive concerned.

1.5.5 The protective devices are to be coordinated in such a way that in the event of a fault, only the defective circuit is disconnected while the supply to the intact circuits is maintained.

All non-earthed poles are to be fitted with fuses and are to be connected and disconnected simultaneously.

1.5.6 On relays and magnetic valves rectifiers or capacitors in parallel are to be fitted to quench arcs.

1.6 Indicating and monitoring equipment

1.6.1 As a general principle, separate indicators or monitors, as appropriate, are to be provided which respond to the operative/inoperative state of the control circuits, a drop in potential below the supply voltage (in the case of battery supply) and an inadmissible fall in the hydraulic oil level in the compensating tank.

1.6.2 A failure of the control voltage and any departure from the limit values prescribed for safe operation shall trip a visual and audible signal in the wheelhouse. It shall be possible to cancel the audible signal. The cancellation of an audible alarm shall not prevent the signalling of a fault affecting the other working parts of the steering gear systems.

1.6.3 Operative signals and alarms:

a) 1 green indicator light each for the main and auxiliary steering gears (or for each main steering gear, where applicable) showing that the equipment is operative

b) 1 red indicator light for the main and auxiliary steering gears to signal a failure or a fault

c) 1 red indicator light responding to a drop in potential of 10% below the rated network voltage. The signal response is to be subjected to a time delay in order to bridge voltage dips caused by starting operations (where a system is supplied by a battery).

1.6.4 In addition, 3-phase AC systems are to be provided with yellow indicator light signalling overload and phase failure.

The phase failure monitor may be dispensed with if the system is supplied exclusively via power circuit breakers. The overload alarm may be dispensed with for drive systems used exclusively for inching duty. The alarm may also be combined with other steering gear alarms.

Where bimetallic relays are used to signal overloading of the motors, these are to be set at 0,7 times the rated current of the motor.

1.7 Rudder control

1.7.1 It shall be possible to control the main and auxiliary steering gears from the main steering station.

The controls are to be so arranged that the rudder angle cannot be altered unintentionally.

1.7.2 Where more than one power drive is installed, the wheelhouse is to be provided with at least two mutually independent steering gear control systems.

Separate cables and lines are to be provided for these control systems.

The mutual independence of the steering gear control systems may not be impaired by the fitting of additional equipment such as autopilot systems.

1.7.3 A common selector switch is to be provided for switching from one control system to another.

1.8 Auto pilot systems

1.8.1 An indicator light showing that the auto pilot is operative has to be installed.

A failure of the control voltage and a deviation of the rated rpm of the gyro shall trip a visual and audible alarm.

The auto pilot system and its associated alarms have to be supplied separately from each other.

1.9 Rudder angle indicator

1.9.1 The actual position of the rudder shall be clearly indicated in the wheelhouse and at every steering station. In the case of electrical or hydraulic control systems, the rudder angle shall be indicated by a device (rudder angle transmitter) which is independent of the control system and actuated either by the rudderstock itself or by parts rigidly connected to it.

The system shall have a separate power supply and the indication shall be continuous.

Additionally installed transmitters for position indicators of autopilot systems shall have a separate power supply and shall be electrically isolated from the above mentioned system.

2 Lateral thrust propellers and active rudder systems

2.1 General

2.1.1 The short-circuit protection of the supply is to conform to [1.5].

2.2 Drives

2.2.1 Active rudder systems are to be rated for continuous service.

Lateral thrust propeller systems are to be rated in accordance with the vessel's operating conditions, but at least for short-term duty (S 2 - 30 min).

Lateral thrust propellers and active rudder systems are to be protected against short circuits and overloads. The overload protection is to be so designed that in the event of an overload a warning is first given followed by a reduction of the output or the shutdown of the system should the overload persist.

Motors for short-term duty shall be monitored for critical winding temperature. An exceeding of temperature limits shall be alarmed. If the maximum permissible temperature is reached the output shall be automatically reduced or the motor shall be switched off.

2.3 Monitoring

2.3.1 The wheelhouse is to be equipped with the monitors and indicators described in [2.3.2] to [2.3.6].

2.3.2 A blue indicator light signalling that the system is operative.

2.3.3 A yellow indicator light for signalling an overload.

2.3.4 Depending on the type of system, further indicators are to be provided for signalling operational level and the desired direction of movement of the vessel.

2.3.5 The controls of lateral thrust propeller systems shall take the form of pushbuttons or levers. The operating direction shall correspond to the desired direction of movement of the vessel. The electrical control system shall be fed from the supply to the main drive.

2.3.6 Where fuses are used for short-circuit protection, a phase monitor shall ensure that the system cannot be started up in the event of a phase failure.

3 Lighting installations

3.1 General

3.1.1 Lighting installations are to be designed in compliance with the following requirements:

- Ch 2, Sec 3, [1.2], for voltages and frequencies
- Ch 2, Sec 3, [3.3], for final subcircuits
- Ch 2, Sec 3, [3.4], for navigation lights
- Ch 2, Sec 8, [1.1.4], for protective measures.

For additional requirements regarding lighting installations on passenger vessels, see Pt D, Ch 1, Sec 6, [5.3].

3.2 Design of lighting installations

3.2.1 The number of lamps and their distribution shall be such as to ensure satisfactory illumination.

3.2.2 In machinery and service spaces, service passageways, cargo holds and commissary spaces, lighting fixtures are to be provided which are sufficiently robust for this application. The lighting fixtures shall be fitted with impact resistant covers.

3.2.3 Wherever possible, separate circuits are to be provided for plug sockets.

3.2.4 The use of normal shore type light fittings is permitted in accommodation, day rooms and commissary spaces provided that they comply with [3.3].

3.3 Design of lighting fixtures

3.3.1 Lighting fixtures shall have a base which reflects and dissipates the heat produced by the light source. The mountings used shall provide a gap of at least 5 mm to allow cooling air to circulate between the base of the fixture and a combustible surface to which it is fastened.

Lighting likely to be exposed to more than ordinary risk of mechanical damage shall be protected against such damage or to be of a special robust construction.

3.3.2 The temperature of lighting fixtures should not exceed 60°C where they can be touched easily.

3.3.3 Heat-resistant leads are to be used for the internal wiring of lamp-holders.

3.3.4 Metal lighting fixtures shall be fitted with an earthing screw in the casing or base. All metal parts inside a lighting fixture are to be conductively connected to each other.

The connecting terminals shall be directly fastened to the lighting fixture.

3.3.5 Every lighting fixture shall be permanently marked with the maximum permissible wattage of the lamps to be fitted.

3.4 Mounting of lighting fixtures

3.4.1 All lighting fixtures are to be mounted in such a way that combustible structural elements such as wood etc. will not be ignited by the heat produced and the lighting fixtures themselves are not exposed to damage.

3.4.2 In bathrooms and shower rooms lighting fixtures shall be mounted in accordance with IEC.

3.5 Lighting in cargo holds

3.5.1 Where a lighting system is permanently installed, each final subcircuit or each section is to be equipped with switches having clearly marked settings or with pilot lamps showing whether the system is switched on. The switches are to be located outside the holds in positions where they are only accessible to authorized personnel.

The lighting fixtures are to be fitted with sufficiently robust wire guards or impact-resistant covers.

Their method of mounting is to ensure that they cannot be damaged while work is in progress.

For explosion protection see also Ch 2, Sec 2, [5.2].

3.6 Lighting of engine rooms

3.6.1 The lighting equipment of engine rooms is to be distributed on two or more circuits so that there still remains sufficient lighting to enable work to continue if there is failure of a circuit.

4 Electric heating appliances

4.1 General

4.1.1 The use of portable, unsecured heating and cooking appliances is not permitted except for appliances which are under constant supervision when in use, e.g. soldering irons, flat irons and appliances where special precautions are taken to prevent the build-up of heat to ignition temperature (e.g. electric cushions and blankets).

4.1.2 The installation and use of electric heaters is not allowed in spaces where easily flammable gases or vapours may accumulate or in which ignitable dust may be deposited.

4.2 Space heaters

4.2.1 Arrangement of heaters

No hooks or other devices on which clothing can be hung may be fitted above heaters without temperature limitation.

Where heaters are fitted in the bulkhead lining, a trough made of non-combustible material (see Ch 4, Sec 1, [2.14] for definition) shall be mounted behind each heater in such a way as to prevent the accumulation of heat behind the lining.

Only waterproof heaters according to IEC 60335 may be used in washrooms, bathrooms and other damp spaces as well as in machinery spaces.

4.2.2 Enclosures

Heater enclosures are to be so designed that no objects can be deposited on them and air can circulate freely round the heating elements.

4.2.3 Thermal design of heaters

Electrical space heaters are to be so designed that, at an ambient temperature of 20°C, the temperature of the outer jacket or cover and the temperature of the air flowing from the heater do not exceed 95°C.

For the maximum permissible temperature of control components and their immediate vicinity, see Ch 2, Sec 8, [4.2.1].

4.2.4 Electrical equipment of heaters

Only heating elements with sheathed or ceramic-encased coils may be used.

To prevent the build-up of heat leading to excessive temperature rises, every heater is to be equipped with thermal protection which interrupts the current as soon as the maximum permissible heater temperature is exceeded. Automatic restarting shall be prevented.

Self regulating material in heating elements may be dispensed with.

The operating switches shall disconnect all live conductors when in the off position. The off position and the positions for the various operating levels shall be clearly marked on the switches.

Every space heater shall normally be connected to a separate circuit. However, a number of small space heaters may be connected to a common circuit provided that their total current input does not exceed 16 A.

4.3 Oil and water heaters

4.3.1 See Ch 1, Sec 3.

4.4 Electric ranges and cooking equipment

4.4.1 Cooking plates

Only enclosed-type cooking plates may be used.

4.4.2 switches

The switches of the individual cooking plates shall disconnect all live conductors when in the off position. The switch steps shall be clearly marked.

Switches and other control elements shall be so fitted that they are not exposed to radiant heat from the cooking plates or heating elements. The maximum permissible temperature limits specified in Ch 2, Sec 8, [4.2.1] are applicable.

SECTION 11 LOCATION

1 General

1.1 Location

1.1.1 The degree of protection of the enclosures and the environmental categories of the equipment are to be appropriate to the spaces or areas in which they are located; see Ch 2, Sec 2, [6.2].

1.2 Areas with a risk of explosion

1.2.1 Except where the installation of equipment for explosive gas atmosphere is provided for by the Rules, electrical equipment is not to be installed where flammable gases or vapours are liable to accumulate; see Ch 2, Sec 2, [5.2].

2 Distribution boards

2.1 Distribution boards for cargo spaces and similar spaces

2.1.1 Distribution boards containing multipole switches for the control of power and lighting circuits in bunkers and cargo spaces are to be situated outside such spaces.

2.2 Distribution board for navigation lights

2.2.1 The distribution board for navigation lights is to be placed in an accessible position in the wheelhouse.

3 Cable runs

3.1 General

3.1.1 Cable runs are to be so selected that cables can, wherever possible, be laid in straight lines and are not exposed to mechanical damage. Continuous cable runs shall not be routed along the shell plating and its frames.

3.1.2 Sources of heat such as boilers, hot pipes etc. shall be by-passed to avoid exceeding the permissible end temperature of the cable conductors. Where this is not possible, the cables are to be shielded from radiant heat.

3.1.3 Where, for safety reasons, an installation is provided with double feeder cables, these are to be laid as far apart as possible.

Cable runs are to be protected against corrosion.

3.1.4 For the installation of cables in the vicinity of radio equipment or of cables belonging to electronic control and monitoring systems, steps are to be taken in order to limit the effects of unwanted electromagnetic interference (see Ch 2, Sec 2, [3]).

4 Storage batteries

4.1 General

4.1.1 Batteries are to be located where they are not exposed to excessive heat, extreme cold, spray, steam or other conditions which would impair performance or accelerate deterioration. They are to be installed in such a way that no damage may be caused to surrounding appliances by the vapours generated.

4.1.2 Storage batteries are to be suitably housed, and compartments (rooms, lockers or boxes) used primarily for their accommodation are to be properly constructed and efficiently ventilated so as to prevent accumulation of flammable gas.

4.1.3 Starter batteries are to be located as close as practicable to the engine or engines served.

4.1.4 Lead-acid batteries and alkaline batteries are not to be installed in the same compartment (room, locker, box), unless of valve-regulated sealed type.

4.2 Ventilation

4.2.1 General requirements

All battery installations in rooms, cabinets and containers shall be constructed and ventilated in such a way as to prevent the accumulation of ignitable gas mixtures.

Gastight NiCd-, NiMH- or Li- batteries may not be ventilated.

4.2.2 Batteries installed in switchboards - charging power up to 0,2 kW

Lead batteries with charging power up to 0,2 kW may be installed without separation to the switchgear, if:

a) the batteries are of valve regulated type (VRL), provided with solid electrolyte, and

b) the switchboards are not closed completely (IP 2X will be suitable), and

c) the charger is an automatic IU-charger with a maximum continuous charging voltage of 2,3 V/cell and rated power is limited on 0,2 kW.

4.2.3 Ventilated spaces - batteries charging power up to 2 kW

Batteries with charging power up to 2 kW may be installed in ventilated cabinets or containers arranged itself in ventilated rooms (except in rooms according to [4.1.1] and [4.1.2]). The unenclosed installation (IP 12) in well ventilated positions in machinery spaces is permitted. The charging power P, in W, for automatic IU-charging should be calculated as follows:

$P = U I$

where:

U : Rated battery voltage, in V

I : Charging current, in A:

- for Pb-batteries: I = 8 C / 100
- for NiCd-batteries: I = 16 C / 100

C : Rated battery capacity, in Ah.

Battery's gassing voltage shall not be exceeded. If several battery sets are be used, the sum of charging power has to be calculated.

The room free air volume V, in m^3, should be calculated depending on battery size, as follows:

$V = 2,5\ Q$

where:

Q : Air quantity, in m^3/h, equal to:

$Q = 0,25\ f\ I\ n$

n : Number of battery-cells in series connection

f : Taken equal to:

- f = 0,03 for lead batteries (VRL) with solid electrolyte
- f = 0,11 for batteries with fluid electrolyte

If several battery sets will be installed in one room, the sum of air quantity shall be calculated.

The air ducts for natural ventilation shall have a cross-section A, in cm^2, as follows, assuming an air speed of 0,5 m/s:

$A = 5,6\ Q$

The required minimum cross-sections of ventilation ducts are shown in Tab 1.

Small air ducts and dimensions of air inlet and outlet openings should be calculated based on lower air speed (≤ 0,5m/s).

Table 1 : Minimum cross-sections of ventilation ducts

Calculation based on battery charging power (automatic IU- charging)			
Battery charging power (W)	Minimum cross-section, in cm^2		
	Lead battery solid electrolyte VRL	Lead battery fluid electrolyte	Nickel-Cadmium battery
P < 500	40	60	80
500 ≤ P < 1000	60	80	120
1000 ≤ P < 1500	80	120	180
1500 ≤ P < 2000	80	160	240
2000 ≤ P < 3000	80	240	forced ventilation
P ≥ 3000	forced ventilation		

4.2.4 Ventilated rooms - charging power more than 2 kW

If the charging power of batteries exceeds 2 kW, it has to be installed either in closed cabinets, containers or a battery room to be ventilated to the open deck. Lead batteries up to 3 kW still may be ventilated by natural ventilation.

Battery rooms are to exhaust to open deck area. It should be used forced ventilation.

Doors to battery rooms have to be gastight with self-closing devices without holding back means.

4.2.5 Ventilation requirements

Ventilation inlet and outlet openings shall be so arranged to ensure that fresh air flows over the surface of the storage battery.

The air inlet openings shall be arranged below and air outlet openings shall be arranged above.

If batteries are installed in several floors, the free distance between them shall be at least 50 mm.

Devices which obstruct the free passage of air, e.g. fire dampers and safety screens, shall not be mounted in the ventilation inlet and outlet ducts. If necessary, weathertight closures shall be carried out otherwise.

Air ducts for natural ventilation shall lead to the open deck directly. Openings shall be at least 0,9 m above the cabinet/container. The inclination of air ducts shall not exceed 45° from vertical.

4.2.6 Forced ventilation

If natural ventilation is not sufficient or required cross-sections of ducts according to Tab 1 are too big, forced ventilation shall be provided. The air quantity Q shall be calculated according to [4.2.3]. The air speed shall not exceed 4 m/s.

Where storage batteries are charged automatically, with automatic start of the fan at the beginning of the charging, arrangements shall be made for the ventilation to continue for at least 1 h after completion of charging.

Wherever possible, forced ventilation exhaust fans shall be used. The fan motors shall be either explosion-proof and resistant to electrolyte or, preferably, located outside of the endangered area.

The fan impellers shall be made of a material which does not create sparks on contact with the housing, and dissipates static charges.

The ventilation systems shall be independent of the ventilation systems serving other rooms.

Air ducts for forced ventilation shall be resistant to electrolyte and shall lead to the open deck.

4.3 Warning signs

4.3.1 At doors or openings of battery rooms, cabinets or containers warning notices have to be mounted drawing attention to the explosion hazard in those areas and that smoking and handling of open flames are prohibited.

SECTION 12 INSTALLATION

1 General

1.1 Protection against injury or damage caused by electrical equipment

1.1.1 All electrical equipment is to be so installed as not to cause injury when handled or touched in the normal manner.

1.1.2 All electrical equipment is to be installed in such a way that live parts cannot be inadvertently touched, unless supplied at a safety voltage.

1.1.3 For protective earthing as a precaution against indirect contact, see [2].

1.1.4 Equipment is to be installed so as not to cause, or at least so as to reduce to a minimum, electromagnetic interference.

1.2 Protection against damage to electrical equipment

1.2.1 Electrical equipment is to be so placed that as far as practicable it is not exposed to risk of damage from water, steam, oil or oil vapours.

1.2.2 The air supply for internal ventilation of electrical equipment is to be as clean and dry as practicable; cooling air for internal ventilation is not to be drawn from below the floor plates in engine and/or boiler rooms.

1.2.3 Equipment is to be so mounted that its enclosing arrangements and the functioning of the built-in equipment will not be affected by distortions, vibrations and movements of the ship's structure or by other damage liable to occur.

1.2.4 If electrical fittings, not of aluminium, are attached to aluminium, suitable provision is to be made to prevent galvanic corrosion.

1.3 Accessibility

1.3.1 Equipment is to be so installed that sufficient space is available for inspection and maintenance as required for all its parts (see [6.1]).

2 Protective earthing

2.1 Parts to be earthed

2.1.1 Metal casings and all metal parts accessible to touch which are not live in normal operation but may become so in the event of a fault are to be earthed except where their mounting already provides a conductive connection to the vessel's hull.

2.1.2 Special earthing may be dispend with in the case of:

a) metal parts insulated by a non-conductor from the dead or earthed parts

b) bearings of electrical machines which are insulated to prevent currents flowing between them and the shaft

c) electrical equipment whose service voltage does not exceed 50 V.

2.2 Methods of earthing

2.2.1 Where machines and equipment are earthed to the hull via their mountings, care is to be taken to ensure good conductivity by clean metal contact faces at the mounting. Where the stipulated earth is not provided via the mountings of machinery and equipment, a special earthing conductor is to be fitted for this purpose.

2.2.2 For the earthing of metal sheaths, armouring and cable braiding, see [7.9].

Protection shall be provided by an additional cable, an additional lead or an additional core in the power cable.

Metal cable armouring may not be used as an earthing conductor.

2.2.3 A conductor normally carrying current may not be used simultaneously as an earthing conductor and may not be connected with the latter by a common connection to the vessel's hull.

2.2.4 The cross-section of the earthing conductor shall be at least in accordance with Tab 1.

2.2.5 Electrical equipment in the area subject to explosion hazard is in every case to be fitted with an earthing conductor irrespective of the type of mounting used.

Table 1 : Cross-section of earthing conductors

Cross-section of main conductors (mm^2)	Minimum cross-section of earthing conductor (mm^2)	
	Earthing conductor incorporated in the cable	Earthing conductor separated from the cable
0,5 up to 4	equal to the main conductor	4
> 4 up to 16	equal to the main conductor	equal to the main conductor
> 16 up to 35	16	16
> 35 up to 120	equal to the half main conductor	equal to the half main conductor
> 120	70	70

2.3 Earthing connections

2.3.1 The connections of earthing conductors to the metal parts to be earthed and to the vessel's hull are to be made with care and are to be protected against corrosion.

3 Installation material

3.1 Design and mounting

3.1.1 Installation appliances shall be adequately protected against mechanical damage and shall be made of corrosion-resistant materials.

Where appliances with casings of brass or other copper alloys are fixed to aluminium surfaces, they shall be insulated from the latter to protect them against corrosion.

3.1.2 The cable entries of the appliances shall be of a size compatible with the cables to be connected and shall be selected to suit the type of cable concerned.

3.1.3 The space inside appliances shall be sufficient to enable insulated conductors to be connected without having to make sharp bends. Corners, edges and projections shall be well rounded.

3.1.4 Mobile appliances are to be provided with means of relieving tension in the cable so that the conductors are not subjected to tensile load.

3.1.5 Terminals, screws and washers shall be made of brass or another corrosion-resistant material.

3.2 Plug connections and switches

3.2.1 The live contact components of sockets (outlets) and plugs shall be so enclosed that they cannot be touched under any circumstances, even during insertion of the plug.

3.2.2 The sockets for amperages over 16 A shall be interlocked with a switch in such a way that the plug can be neither inserted nor withdrawn as long as the socket contact sleeves are live.

3.2.3 Where a vessel is provided with sockets for a variety of distribution systems differing in voltage or frequency, use is to be made of sockets and plugs which cannot be confused in order to ensure that an appliance cannot be connected to a socket belonging to the wrong system.

3.2.4 Plug connections shall conform to the required class of enclosure irrespective of whether or not the plug is in or out.

3.2.5 Wherever possible, appliances are to be so designed and mounted that the plugs are inserted from below.

3.2.6 Apart from the sockets standardized and specifically approved for use in shipbuilding practice, accommodation and day rooms may also be provided with sockets designed for use on shore provided that they are mounted in a dry position.

3.2.7 Only sockets with a permissible operating voltage in accordance with Ch 2, Sec 3, Tab 1 are allowed in washrooms and bathrooms. No sockets or switches may be fitted in shower cubicles, shower cabinets or close to bathtubs. Exempted from this rule are razor sockets with an isolating transformer.

3.2.8 Switches shall simultaneously connect and disconnect all the non-earthed conductors of a circuit. Single-pole disconnection is permitted only in the accommodation area for the switches of lighting circuits not carrying more than 16 A.

3.2.9 No plug connections are normally to be provided in cargo holds.

Where power sockets are essential in special cases, e.g. for supplying power to refrigerated containers, they are to be supplied from their own subdistribution boards with fused outlet switches which can be centrally disconnected and are located outside the cargo holds.

The subdistribution boards shall be provided with devices indicating when they are live and which outlets are connected/disconnected.

Sockets may only be installed at locations which give adequate protection against mechanical damage.

4 Rotating machines

4.1

4.1.1 Every rotating machine is preferably to be installed with the shaft in the fore-and-aft direction. Where a rotating machine of 100 kW and over is installed athwartship, or vertically, it is to be ensured that the design of the bearings and the arrangements for lubrication are satisfactory to withstand the rolling specified in Ch 2, Sec 2, Tab 4.

5 Semiconductor converters

5.1 Semiconductor power converters

5.1.1 Naturally air-cooled semiconductor converters are to be installed such that the circulation of air to and from the stacks or enclosures is not impeded and that the temperature of the cooling inlet air to converter stacks does not exceed the ambient temperature for which the stacks are specified.

6 Switchgear and controlgear assemblies

6.1 Main switchboards

6.1.1 Switchboards are to be installed in easily accessible and adequately ventilated spaces in which no flammable gases can gather. They are to be protected against water and mechanical damage.

Switchboards on the floorplates over the bilges shall be closed from below.

Pipes and air trunks are to be so arranged that any leakage does not endanger the switchgear. Where the routing of pipes and trunks close to switchboards cannot be avoided, they are to have no flanged or screwed joints in this section.

Cabinets and recesses for housing switchboards shall be made of non-combustible material (see Ch 4, Sec 1, [2.14] for definition) or shall be protected by a metal or other fire-

proof lining. The doors of cabinets and recesses are to bear a notice drawing attention to the switchboard installed therein. A service passageway at least 0,6 m wide is to be provided in front of switchboards.

6.1.2 A service passageway of not less than 0,5 m behind the switchboard is called for only when required by its construction or maintenance.

6.1.3 In the case of voltages over 50 V, insulating gratings or mats shall be placed behind the switchboards and in front of their control sides. No live parts may be mounted on the front side of switchboards.

Parts located to the rear of an open switchboard and carrying voltages of more than 50 V shall be protected against contact up to a height of 0,3 m.

7 Cables

7.1 Cable laying

7.1.1 Cables from generators and all cables going out from the main or emergency switchboard up to the distribution boards or the power consumers themselves shall be laid undivided and in a single length. The same applies to all connecting cables in essential systems. Exemptions are subject to the Society's express approval (e.g. for vessel extensions or barrier containers at the movable cable loop below the wheelhouse).

For elastically mounted machinery and equipment, adequate freedom of movement shall be ensured by compensation bends.

7.1.2 In DC systems without hull return multi-core cables are to be used for the smaller cross-sections. When using single-core cables for large cross-sections, the outgoing and return lines shall be laid as close as possible to each other over their entire length to avoid stray magnetic fields.

7.1.3 In 3-phase systems without hull return, 3-core cables are to be used for 3-phase connections; and 4-core cables are to be used for circuits with charged neutral. The use of a 3-core cable and a separate neutral conductor is only permissible if the current in the latter does not exceed 20 A.

7.1.4 In single or 3-phase AC systems, single-core cables carrying a current above 20 A are to be avoided. If such a method of installation cannot be avoided, the measures to be taken are to be agreed with the Society.

7.1.5 Cables whose maximum permissible temperature of the conductor differ by more than 5 K from each other may be laid in a common bundle only if the permissible loadings of the lowest-capacity type are taken as the basis for all cables.

7.1.6 Should it be impossible to use multi-core cables in accordance with [7.1.3] in single or 3-phase AC systems because of the connection difficulties associated with high power ratings, approval may be given for the laying of single-core cables and wires subject to compliance with special requirements which are to be agreed with the Society in each case.

7.1.7 Tab 2 indicates the minimum internal radius of curvature of cable bends according to the type and outside diameter of the cable concerned.

Table 2 : Minimum internal radius of curvature

Outer diameter D of cable (mm)	Cables without metal sheath or braid	Cables with metal sheath or braid
D ≤ 25	4 D	6 D
D > 25	6 D	6 D

7.2 Fastening of cables and wires

7.2.1 Cables are to be fastened to trays or carriers. Individually run cables are to be fixed with clips.

7.2.2 Cables and wires are to be fastened with clips, straps or bindings made of galvanized steel strip, copper or brass strip.

Other established fastenings approved by the Society may also be used.

Cadmium coated or galvanized steel screws and galvanized clips or fastenings of other suitable materials are to be used for fixing cables to aluminium surfaces.

Clips used for mineral-insulated copper-sheathed cables shall be made of copper alloy if in electrical contact with the cable-sheath.

7.3 Tension relief

7.3.1 Cables are to be fastened in such a way that any tensile loads are kept within the permissible limits. This is particularly applicable to cables with a small cross-section and to those installed in vertical trays or vertical ducts.

7.4 Protection against mechanical damage

7.4.1 Cables in cargo holds, on deck and in locations where they are particularly exposed to the danger of mechanical damage, including especially cables laid up to a height of 500 mm above floor, are to be provided with additional protection in form of sheaths or ducts.

Cable coverings are to be conductively connected to the vessel's hull.

7.5 Laying of cables and wires in metal conduits or enclosed ducts

7.5.1 Conduits and ducts shall be smooth on the inside and shall have ends shaped to avoid damaging the cable covering or sheath. They are to be provided with drainage holes measuring at least 10 mm in diameter.

Bores and bending radii shall be such as to enable the cables to be inserted without difficulty.

7.5.2 Cables may only occupy up to a maximum of 40% of the clear cross-section of conduits and ducts, the aggregate cross-section of the cables being the sum of the individual cross-sections calculated from the cable diameters.

7.5.3 Extensive cable ducts and conduits are to be fitted with inspection and draw containers.

7.6 Laying of cables and wires in non-metal conduits or enclosed ducts

7.6.1 The conduits or ducts shall be made of flame-retardant material.

7.7 Bulkheads and deck penetrations

7.7.1 Where cables pass through bulkheads or decks, the cable penetrations shall not impair the mechanical strength, watertightness or fire resistance of the bulkheads and decks concerned.

7.7.2 Cable lead-throughs in watertight bulkheads or decks are to take the form of individual gland-type lead-throughs or, in the case of cable bundles, collective lead-throughs of a type approved by the Society. Sealing may be effect with casting resins or elastic plugs.

If casting resin is used, the cables shall be run and encased in the resin over a length of at least 150 mm inside the lead-through.

7.8 Cables in refrigerated spaces

7.8.1 Cables may be laid neither in nor directly upon the thermal insulation of these spaces. They are to be installed on perforated metal plates or spacing clips clear of the covering of the insulating layer. Excepted from this are individual cables with plastic outer sheathing, which may be laid directly on the insulation covering.

7.9 Cable laying to wheelhouses using extending cable feeds (movable loops)

7.9.1 The following points are to be specially considered when selecting and laying the cables for variable-height wheelhouse and control platforms:

- choice of cable types possessing the necessary flexibility and resistance to oil and to high and low temperatures (e.g. HO7RN-F)
- use of increased bending radii at locations subject to severe mechanical loads
- cable attachment using metal cable straps or clips
- suitable protection against mechanical damage.

7.10 Cables junctions and branches

7.10.1 Branches from cables and wires may only be made inside containers.

7.10.2 Junction and distribution containers shall be located in easily accessible positions and shall be clearly marked.

7.10.3 As a general principle, only one circuit shall be led through any one box. Should it be necessary to lead a larger number of circuits through one box, the terminals are to be so arranged that similar circuits are adjacent to each other. The terminals for dissimilar systems or for systems with different working voltages are to be separated from each other by partitions. All terminals are to be clearly and indelibly marked. A terminal connection diagram is to be mounted on the box cover.

7.10.4 It is necessary to effect the continuous conductive connection of all metal cable sheaths, particularly inside cable distribution and junction containers.

Metal cable sheaths, armouring, screening and shielding shall normally be conductively connected to the vessel's hull at both ends. In the case of single-core cables in single phase AC systems, only one end is to be earthed. The earthing at one end only of cables and wires in electronic systems is recommended.

8 Various appliances

8.1 Lighting fittings

8.1.1 Lighting fittings are to be so arranged as to prevent temperature rises which could damage the cables and wiring.

Note 1: Where the temperature of terminals of lighting fittings exceeds the maximum conductor temperature permitted for the supplied cable (see Ch 2, Sec 9, [3.1]), special installation arrangements, such as terminal boxes thermally insulated from the light source, are to be provided.

8.1.2 Lighting fittings are to be so arranged as to prevent surrounding material from becoming excessively hot.

8.1.3 Lighting fittings are to be secured in place such that they cannot be displaced by the motion of the vessel.

8.1.4 Emergency lights are to be marked for easy identification.

8.2 Heating appliances

8.2.1 Space heaters are to be so installed that clothing, bedding and other flammable material cannot come in contact with them in such a manner as to cause risk of fire.

Note 1: To this end, for example, hooks or other devices for hanging garments are not to be fitted above space heaters or, where appropriate, a perforated plate of incombustible material is to be mounted above each heater, slanted to prevent hanging anything on the heater itself.

8.2.2 Space heaters are to be so installed that there is no risk of excessive heating of the bulkheads or decks on which or next to which they are mounted.

8.2.3 Combustible materials in the vicinity of space heaters are to be protected by suitable incombustible and thermal-insulating materials.

8.3 Heating cables and tapes or other heating elements

8.3.1 Heating cables and tapes or other heating elements are not to be installed in contact with combustible materials.

Where they are installed close to such materials, they are to be separated by means of a non-flammable material.

SECTION 13 ELECTRICAL PROPULSION PLANTS

1 General

1.1

1.1.1 A vessel has an electrical main propulsion plant if the main drive to the propeller is provided by at least one electrical propulsion motor.

1.1.2 If a propulsion plant has only one propulsion motor and the vessel has no additional propulsion system which ensures sufficient propulsive power, this plant shall be so structured that following a fault in the static converter or in the regulation- and control system at least a limited propulsion capability remains.

1.1.3 Auxiliary propulsion plants are additionally propulsion systems.

1.1.4 The engines driving the generators for the electrical propulsion plant are main engines. Motors driving the propeller shaft are propulsion motors.

1.1.5 If electrical main propulsion plants are supplied from the vessel's general mains, this Section applies also to the generators and the associated switchgear. For auxiliary propulsion plants, the requirements of this Section are to be met correspondingly.

2 Drives

2.1 Basis for dimensioning

2.1.1 The electrical machinery and plants must, in accordance with their service and operating conditions, be designed for short periods of overload and for the effect of manoeuvres.

2.1.2 The lubrication of machinery and shafting shall be designed to be adequate for the entire speed range of rotation in both directions including towing.

2.2 Main engines

2.2.1 The main engines must also conform to the requirements of Part C, Chapter 1, Machinery and systems.

2.2.2 The diesel governors must allow safe operation over the whole speed range and under all running and manoeuvring conditions, this for both, single operation and parallel operation.

2.2.3 The main engines shall be so constructed that under the consideration of the plant conception they can absorb the reverse power arising during reversing manoeuvres.

2.3 Propulsion motors

2.3.1 The propulsion motors must also conform to the requirements of Ch 2, Sec 1 to Ch 2, Sec 12.

2.3.2 The effects of the harmonics of currents and voltages is to be taken into consideration for the design of the propulsion motors.

2.3.3 The winding insulation shall be designed to withstand the overvoltages which may arise from manoeuvres switching operations.

2.3.4 Machines with forced ventilation shall be so dimensioned that in case of ventilation failure a limited operation is still possible. Versions deviating from this principle require an agreement with the Society.

2.3.5 Electrical propulsion motors must be able to withstand without damage a short circuit at their terminals and in the system under rated operating conditions until the protection devices respond.

3 Static converter installations

3.1

3.1.1 Power-electronic equipment must also conform to the requirements of Ch 3, Sec 4, [2].

3.1.2 Static converters must be designed for the load to be expected under all operating and manoeuvring conditions, including overloads and short circuits.

3.1.3 If static converters are separately cooled, the plant must be capable to continue operation at reduced power level if the cooling system fails.

3.1.4 The circuits for main power supply and exciter equipment must be supplied directly from the switchboard and shall be separate for each motor and each winding.

3.1.5 Exciter circuits whose failure can endanger the operation shall only be protected against short circuit.

3.1.6 The static converters must be easily accessible for inspection, repair and maintenance.

4 Control stations

4.1

4.1.1 Should the remote control system fail, local operation must be possible. Changeover must be possible within a reasonably short time. This operation can be made, e.g. from the control cabinet of the propulsion plant. Voice communication with the bridge shall be provided.

4.1.2 The main control station on the bridge shall be provided with an emergency stop device independent of the operating elements of the main control system. Also an emergency stop device in the engine room shall be provided.

4.1.3 All operating functions shall be made logical and simple, to prevent maloperation. The operating equipment shall be clearly arranged and marked accordingly.

4.1.4 A defect in a system for synchronizing or in a position equalization device for control operating levers of several control stations shall not result in the failure of the remote control from the main control position.

5 Vessel's mains

5.1

5.1.1 It must be possible to connect and disconnect generators without interrupting the propeller drive.

5.1.2 If a power management system is available, the automatic stop of main engines during manoeuvring shall be prevented.

6 Control and regulating

6.1

6.1.1 If computer systems are used, the requirements of Ch 3, Sec 3 shall be observed.

6.1.2 An automatic power limitation of the propulsion motors must ensure that the vessel mains will not be overloaded.

6.1.3 The reverse power during reversing or speed-reducing manoeuvres shall be limited to the acceptable maximum values.

7 Protection of the plant

7.1

7.1.1 Automatic stop of the propulsion plant, which impairs the vessel's manoeuvring capability, shall be limited to such failures which would result in serious damage within the plant.

7.1.2 Protection devices must be set to such values that they do not respond to overload occurring during normal operation, e.g. while manoeuvring.

7.1.3 Defects in reducing and stopping devices shall not impair the limited operation in accordance with [1.1.2].

7.1.4 In the event of failure of an actual or reference value it shall be ensured that the propeller speed does not increase unacceptably, the propulsion will be not reversed or dangerous operating conditions arise. The same applies to failure of the power supply for control and regulating.

7.1.5 The following additional protection equipment shall be provided:

- where drives uncontrolled can be mechanically blocked, they must be provided with protection devices which prevents damage to the plant
- overspeed protection
- protection against overcurrent and short circuit
- differential protection and earth fault monitoring for propulsion motors with an output of more than 1500 kW.

7.1.6 The actuation of protection, reducing and alarm devices shall be indicated optically and audibly. The alarm condition must remain recognizable even after switching-off.

8 Measuring, indicating, monitoring and alarms equipment

8.1 General

8.1.1 Failures in measuring, monitoring and indicating equipment must not cause a failure of control and regulating.

8.2 Measuring equipment and indicators

8.2.1 Propulsion motors and generators shall be provided with at least the measuring equipment and indicators at control stations in compliance with [8.2.2] and [8.2.3].

8.2.2 The following equipment shall be provided at local control station:

- ammeter and voltmeter for each supply and each load component
- ammeter and voltmeter for each exciter circuit
- revolution indicator for each shaft
- plant ready for switching on
- plant ready for operation
- plant disturbed
- power reduced
- control from the bridge
- control from local control station.

8.2.3 The following equipment shall be provided at main control station on the bridge:

- revolution indicator per shaft
- indication of the power remaining available for the propulsion plant in relation to the total available vessel's main power; the indication of remaining power may be omitted in the case of power management system
- plant ready for switching on
- plant ready for operation
- plant disturbed
- power reduced
- request to reduce
- control from the bridge
- control from the local control station.

8.3 Monitoring equipment

8.3.1 Abnormal values of the different parameters of the following equipment should trigger an alarm which has been signalled optically and audibly:

a) monitoring of the ventilators and temperatures of the cooling air for forced-ventilation of machines, transformers and static converters

b) monitoring of the flow rate and leakage of coolants of machines and static converters with closed cooling systems

c) instead of the monitoring of air flow and flow rate (items a) and b)) of machines and transformers, winding-temperature monitoring can be provided

d) for machines above 1500 kW, temperature monitoring for the stator windings and the bearings

e) pressure or flow monitoring for the lubricating oil of friction bearings (except in the case of ring)

f) insulation resistance in the case of unearthed networks.

8.4 Power reduction

8.4.1 In the case abnormal operating power may be automatically reduced, this information is to be indicated at the propulsion control position.

9 Cables and cable installation

9.1 General

9.1.1 The cable network for electrical propulsion plants must comply with the requirements of Ch 2, Sec 9. If there is more than one propulsion unit, the cables of any one unit shall, as far as is practicable, be run over their entire length separately from the cables of the other units.

10 Testing and trials

10.1 General

10.1.1 A quality assurance plan has to be submitted to the Society.

10.1.2 Tests of machines, static converters, switchgear, equipment and cables shall be carried out at the maker's works in accordance with applicable requirements of this Chapter.

10.1.3 Shaft material for generators and propulsion motors

Tests of steel and Iron materials, shall be made by a shaft material test as for vessel's shafting.

10.1.4 The testing of other important forgings and castings for electrical main propulsion plants, e.g. rotors and pole shoe bolts, shall be agreed with the Society.

10.2 Tests after installation

10.2.1 Newly-constructed or enlarged plants require testing and trials on board.

The scope of the trials is to be agreed with the Society.

10.2.2 Dock trial

For scope and extent of dock trials, see Ch 2, Sec 14, [4.1.6].

10.2.3 River trial

For river trial programme, see Ch 2, Sec 14, [5.2].

SECTION 14 TESTING

1 General

1.1

1.1.1 The tests are divided into:

- tests during construction
- tests during commissioning
- tests during trial voyages.

2 Type approvals

2.1 General

2.1.1 The installations, equipment and assemblies mentioned in [2.1.5] are subject to mandatory type approval.

2.1.2 Type tests shall be carried out in the presence of Society's Surveyor either in the manufacturer's works or, by agreement, in suitable institutions.

2.1.3 Type tests are carried out according to the Society's Rules for approval of equipment.

2.1.4 Type tested installations, apparatuses and assemblies shall be used within the scope of valid construction Rules only. The suitability for the subject application shall be ensured.

2.1.5 Installations, equipment and assemblies subject to type approval

The following installations, equipment and assemblies are subject to type approval:

a) generators, power ≥ 50 kW/kVA

b) electrical machines, power ≥ 50 kW/kVA

c) transformers, power ≥ 50 kW/kVA

d) storage batteries

e) storage battery chargers, power ≥ 2 kW

f) switchgear

g) cables and insulated wires

h) control, monitoring, alarm and safety systems

i) power electronics, power ≥ 50 kW/kVA

j) computer systems: class 3, class 4 and class 5.

2.2 Exceptions

2.2.1 Instead of the stipulated type approvals in well-founded cases routine tests in the presence of a Surveyor may be carried out. An agreement with the Society prior to testing is required.

3 Tests during construction

3.1

3.1.1 During the period of construction of the vessel, the installations shall be checked for conformity with the documents reviewed/approved by the Society and with the Rules for construction.

3.1.2 Test certificates for tests which have already been performed shall be presented to the Surveyor on request.

3.1.3 Protective measures

a) protection against foreign bodies and water

b) protection against electric shock, such as protective earthing, protective separation or other measures as stated in Ch 2, Sec 8, [1.1.4]

c) measures of explosion protection.

3.1.4 Testing of the cable network

Inspection and testing of cable installation and cable routing with regard to:

a) acceptability of cable routing with regard to:
   - separation of cable routes
   - fire safety
   - reliable supply of emergency consumers (where applicable)

b) selection and fixation of cables

c) construction of bulkhead and deck penetrations

d) insulation resistance measurement.

4 Testing during commissioning of the electrical equipment

4.1

4.1.1 General

Proofs are required of the satisfactory condition and proper operation of the main and emergency power supply systems, the steering gear and the aids of manoeuvring, as well as of all the other installations specified in the Rules for construction.

Unless already required in the Rules for construction, the tests to be performed shall be agreed with the Society's Surveyor in accordance with the specific characteristics of the subject equipment.

4.1.2 Generators

A test run of the generator sets shall be conducted under normal operating conditions, and shall be reported on appropriate form.

4.1.3 Storage batteries

The following shall be tested:

a) installation of storage batteries

b) ventilation of battery rooms, cupboards/containers, and cross-sections of ventilation ducts

c) storage-battery charging equipment

d) the required caution labels and information plates.

4.1.4 Switchgear

The following items shall be tested under observance of:

a) accessibility for operation and maintenance

b) protection against the ingress of water and oil from ducts and pipes in the vicinity of the switchboards, and sufficient ventilation

c) equipment of main and emergency switchboards with insulated handrails, gratings and insulating floor coverings

d) correct settings and operation of protection devices and interlocks.

The Society reserves the right to demand the proof of selective arrangement of the vessel supply system.

4.1.5 Power plants

The following items shall be tested:

a) Motor drives together with the driven machines, which shall, wherever possible, be subjected to the most severe anticipated operating conditions

   This test shall include a check of the settings of the motors' short-circuit and overcurrent protection devices

b) The emergency remote stops of equipment such as engine room fans and boiler blowers

c) Closed loop controls, open loop controls and all electric safety devices.

4.1.6 Electrical propulsion plant

Functioning of the propulsion plant shall be proved by a dock trial before navigation trials.

At least the following trials/measurements shall be carried out in the presence of the Society Surveyor:

- start-up, loading and unloading of the main and propulsion motors in accordance with the design of the plant and a check of regulation, control and switchgear
- verification of propeller speed variation and all associated equipment
- verification of protection, monitoring and indicating/alarm equipment including the interlocks for sufficient functioning
- verification of insulation condition of the main-propulsion circuits.

5 Testing during trial voyages

5.1 General

5.1.1 Proof is required that the power supply meets the requirements under the various operating conditions of the vessel. All components of the system must function satisfactorily under service conditions, i.e. at all main engine speeds and during all manoeuvres.

5.2 Electrical propulsion plant

5.2.1 Trial programme

The trial programme shall at least include:

a) Continuous operation of the vessel at full propulsion load until the entire propulsion plant has reached steady-state temperatures.

   The trials shall be carried out at rated engine speed and with an unchanged governor setting:

   - at 100% power output (rated power): at least 2 hours
   - with the propeller running astern during the dock test or during the river trial at a minimum speed of at least 70% of the rated propeller speed: 10 minutes.

b) Reversal of the plant out of the steady-state condition from full power ahead to full power astern and maintaining of this setting until at least the vessel has lost all speed. Characteristic values such as speed, system currents and voltages, and the load sharing of the generators, shall be recorded. If necessary, oscillograms shall be made

c) Performance of typical manoeuvres

d) Checking of the machinery and plant in all operating conditions

e) Checking of the network qualities in the vessel's propulsion network and mains.

Part C
Machinery, Electricity and Fire

Chapter 3
AUTOMATION

SECTION 1 GENERAL REQUIREMENTS

SECTION 2 DESIGN REQUIREMENTS

SECTION 3 COMPUTER BASED SYSTEMS

SECTION 4 CONSTRUCTIONAL REQUIREMENTS

SECTION 5 INSTALLATIONS REQUIREMENTS

SECTION 6 TESTING

SECTION 1 GENERAL REQUIREMENTS

1 General

1.1 Field of application

1.1.1 The following requirements apply to automation systems, installed on all vessels, intended for essential services as defined in Pt A, Ch 1, Sec 1, [1.3]. They also apply to systems required in Part C, Chapter 1 and Part C, Chapter 2, installed on all vessels.

1.1.2 This chapter is intended to avoid that failures or malfunctions of automation systems associated with essential and non-essential services cause danger to other essential services.

1.1.3 Requirements for unattended machinery spaces and for additional notations are specified in Pt D, Ch 2, Sec 8.

1.2 Regulations and standards

1.2.1 The regulations and standards applicable are those defined in Ch 2, Sec 1.

1.3 Definitions

1.3.1 Unless otherwise stated, the terms used in this chapter have the definitions laid down in Ch 2, Sec 1 or in the IEC standards. The following definitions also apply:

- Alarm indicator is an indicator which gives a visible and/or audible warning upon the appearance of one or more faults to advise the operator that his attention is required.
- Alarm system is a system intended to give a signal in the event of abnormal running condition.
- Application software is a software performing tasks specific to the actual configuration of the computer based system and supported by the basic software.
- Automatic control is the control of an operation without direct or indirect human intervention, in response to the occurrence of predetermined conditions.
- Automation systems are systems including control systems and monitoring systems.
- Basic software is the minimum software, which includes firmware and middleware, required to support the application software.
- Cold standby system is a duplicated system with a manual commutation or manual replacement of cards which are live and non-operational. The duplicated system is to be able to achieve the operation of the main system with identical performance, and be operational within 10 minutes.
- Control station is a group of control and monitoring devices by means of which an operator can control and verify the performance of equipment.
- Control system is a system by which an intentional action is exerted on an apparatus to attain given purposes.
- Fail safe is a design property of an item in which the specified failure mode is predominantly in a safe direction with regard to the safety of the ship, as a primary concern.
- Full redundant is used to describe an automation system comprising two (identical or non-identical) independent systems which perform the same function and operate simultaneously.
- Hot standby system is used to describe an automation system comprising two (identical or non-identical) independent systems which perform the same function, one of which is in operation while the other is on standby with an automatic change-over switch.
- Instrumentation is a sensor or monitoring element.
- Local control is control of an operation at a point on or adjacent to the controlled switching device.
- Monitoring system is a system designed to observe the correct operation of the equipment by detecting incorrect functioning (measure of variables compared with specified value).
- Safety system is a system intended to limit the consequence of failure and is activated automatically when an abnormal condition appears.
- Redundancy is the existence of more than one means for performing a required function.
- Remote control is the control from a distance of apparatus by means of an electrical or other link.
- Inspection of components (only hardware) from sub-suppliers: proof that components and/or sub-assemblies conform to specification.
- Quality control in production: evidence of quality assurance measures on production.
- Final test reports: reports from testing of the finished product and documentation of the test results.
- Hardware description:
  - system block diagram, showing the arrangement, input and output devices and interconnections
  - connection diagrams
  - details of input and output devices
  - details of power supplies.

- Failure analysis for safety related functions only (e.g. FMEA): the analysis is to be carried out using appropriate means, e.g.:
  - fault tree analysis
  - risk analysis
  - FMEA or FMECA.

  The purpose is to demonstrate that for single failures, systems will fail to safety and that systems in operation will not be lost or degraded beyond acceptable performance criteria when specified by the Society.

1.4 General

1.4.1 The automation systems and components, as indicated in Ch 2, Sec 14, [2], are to be chosen from among the list of type approved products.

They are to be approved on the basis of the applicable requirements of these Rules and in particular those stated in this Chapter.

Case by case approval may also be granted at the discretion of the Society, based on submission of adequate documentation and subject to the satisfactory outcome of any required tests.

1.4.2 Control, alarm and safety systems are to be based on the fail-to-safety principle.

1.4.3 Failure of automation systems is to generate an alarm.

1.4.4 Detailed indication, alarm and safety requirements regarding automation systems for individual machinery and installations are to be found in Ch 3, Sec 2, Tab 1 andPt D, Ch 2, Sec 8, Tab 2.

Each row of these tables is to correspond to one independent sensor.

2 Documentation

2.1 General

2.1.1 Before the actual construction is commenced, the Manufacturer, Designer or Shipbuilder is to submit to the Society the documents (plans, diagrams, specifications and calculations) requested in this Section.

The list of documents requested is to be considered as guidance for the complete set of information to be submitted, rather than an actual list of titles.

The Society reserves the right to request the submission of additional documents in the case of non-conventional design or if it is deemed necessary for the evaluation of the system, equipment or components.

Plans are to include all the data necessary for their interpretation, verification and approval.

2.2 Documents to be submitted

2.2.1 The documents listed in Tab 1 are to be submitted.

2.3 Documents for type approval of equipment

2.3.1 Documents to be submitted for type approval of equipment are listed hereafter:

- a request for type approval from the manufacturer or his authorized representative
- the technical specification and drawings depicting the system, its components, characteristics, working principle, installation and conditions of use and documents related to computer based system, if any.
- any test reports previously prepared by specialized laboratories.

Table 1 : Documentation to be submitted

No	I/A **(1)**	Documentation
1	I	The general specification for the automation of the vessel
2	A	The detailed specification of the essential service systems
3	A	The list of components used in the automation circuits, and references (Manufacturer, type, etc.)
4	I	Instruction manuals
5	I	Test procedures for control, alarm and safety systems
6	A	A general diagram showing the monitoring and/or control positions for the various installations, with an indication of the means of access and the means of communication between the positions as well as with the engineers
7	A	The diagrams of the supply circuits of automation systems, identifying the power source
8	A	The list of monitored parameters for alarm/monitoring and safety systems
9	A	Diagram of the engineers' alarm system
10	I	List of computerized systems
11	A / I	Documentation related to computer based system, if any
12	I	Software Registry

(1) A = to be submitted for approval;
I = to be submitted for information.

2.3.2 Modifications

Modifications are to be documented by the manufacturer. Subsequent significant modifications to the software and hardware for systems of categories II and III are to be submitted for approval.

Note 1: A significant modification is a modification which influences the functionality and/or the safety of the system.

3 Environmental and supply conditions

3.1 General

3.1.1 The automation system is to operate correctly when the power supply is within the range specified in Ch 3, Sec 2, [2].

3.1.2 Environmental conditions

The automation system is to be designed to operate satisfactorily in the environment in which it is located. The environmental conditions are described in Ch 2, Sec 2, [1].

3.1.3 Failure behaviour

The automation system is to have non-critical behaviour in the event of power supply failure, faults or restoration of operating condition following a fault. If a redundant power supply is used, it must be taken from an independent source.

3.2 Power supply conditions

3.2.1 Electrical power supply

The conditions of power supply to be considered are defined in Ch 2, Sec 2, [2].

3.2.2 Pneumatic power supply

For pneumatic equipment, the operational characteristics are to be maintained under permanent supply pressure variations of ± 20% of the rated pressure.

Detailed requirements are given in Ch 1, Sec 10, [17].

3.2.3 Hydraulic power supply

For hydraulic equipment, the operational characteristics are to be maintained under permanent supply pressure variations of ± 20% of the rated pressure.

Detailed requirements are given in Ch 1, Sec 10, [14].

4 Materials and construction

4.1 General

4.1.1 The choice of materials and components is to be made according to the environmental and operating conditions in order to maintain the proper function of the equipment.

4.1.2 The design and construction of the automation equipment is to take into account the environmental and operating conditions in order to maintain the proper function of the equipment.

4.2 Type approved components

4.2.1 See Ch 2, Sec 14, [2].

5 Alterations and additions

5.1

5.1.1 When an alteration or addition to an approved system is proposed, plans are to be submitted and approved by the Society before the work of alteration or addition is commenced.

5.1.2 A test program for verification and validation of correct operation is to be made available.

5.1.3 Where the modifications may affect compliance with the rules, they are to be carried out under survey and the installation and testing are to be to the Surveyor's satisfaction.

SECTION 2 DESIGN REQUIREMENTS

1 General

1.1 General requirements

1.1.1 The design of safety measures, open and closed loop controls and monitoring of equipment must limit any potential risk in the event of breakdown or defect to a justifiable level of residual risk.

1.1.2 Where appropriate, the following basic requirements shall be observed:

- compatibility with the environmental and operating conditions
- compliance with accuracy requirements
- recognizability and constancy of the parameter settings, limiting and actual values
- compatibility of the measuring, open and closed loop controls and monitoring systems with the process and its special requirements
- immunity of system elements to reactive effects in overall system operation
- non-critical behaviour in the event of power failure, restoration and of faults
- unambiguous operation
- maintainability, the ability to recognize faults and test capability
- reproducibility of values.

1.1.3 Automatic interventions shall be provided where damage cannot be avoided by manual intervention.

1.1.4 If dangers to persons or the safety of the vessel arising from normal operation or from faults or malfunctions in machinery or plant, or in control, monitoring and measuring systems, cannot be ruled out, safety devices or safety measures are required.

1.1.5 If dangers to machinery and systems arising from faults or malfunctions in control, monitoring and measuring systems cannot be ruled out, protective devices or protective measures are required.

1.1.6 Where mechanical systems or equipment are either completely or partly replaced by electric / electronic equipment, the requirements relating to mechanical systems and electric/electronic equipment shall be met accordingly.

1.2 Design and construction

1.2.1 Machinery alarm systems, protection and safety systems, together with open and closed loop control systems for essential equipment shall be constructed in such a way that faults and malfunctions affect only the directly involved function. This also applies to measuring facilities.

1.2.2 For machinery and systems which are controlled remotely or automatically, control and monitoring facilities must be provided to permit independent manual operation.

Manual operation shall override all remote and automatical control.

1.2.3 In the event of disturbances automatically switched off plants shall not be released for restarting until having been manually unlocked.

1.3 Application of computer systems

1.3.1 If computer systems are used, Ch 3, Sec 3 has to be observed.

1.4 Maintenance

1.4.1 Access must be provided to systems to allow measurements and repairs to be carried out. Facilities such as simulation circuits, test jacks, pilot lamps etc. are to be provided to allow functional checks to be carried out and faults to be located.

1.4.2 The operational capability of other systems shall not be impaired as a result of maintenance procedures.

1.4.3 Where the replacement of circuit boards in equipment which is switched on may result in the failure of components or in the critical condition of systems, a warning sign must be fitted to indicate the risk.

1.4.4 Circuit boards and plug-in connections must be protected against unintentional mixing up. Alternatively they must be clearly marked to show where they belong to.

2 Power supply of automation systems

2.1

2.1.1 Automation systems are to be arranged with an automatic change-over to a continuously available stand-by power supply in case of loss of normal power source.

2.1.2 The capacity of the stand-by power supply is to be sufficient to allow the normal operation of the automation systems for at least half an hour.

2.1.3 Failure of any power supply to an automation system is to generate an audible and visual alarm.

2.1.4 Power supplies are to be protected against short circuit and overload for each independent automation system.

Power supplies are to be isolated.

3 Control systems

3.1 General

3.1.1 In the case of failure, the control systems used for essential services are to remain in the last position they had before the failure, unless otherwise specified by these Rules.

3.2 Local control

3.2.1 Each system is to be able to be operated manually from a position located so as to enable visual control of operation. For detailed instrumentation for each system, refer to Part C, Chapter 1 and Part C, Chapter 2.

3.2.2 Local control systems is to be self-contained and not depend on other systems or external communication links for its intended operation.

3.2.3 When local control is selected, any control signal(s) from the remote control system is to be ignored.

3.3 Remote control systems

3.3.1 When several remote control stations are provided, control of machinery is to be possible at one station at a time. At each location, an indicator showing which location is in control is to be provided.

3.3.2 Remote control is to be provided with the necessary instrumentation, in each remote control station, to allow effective control (correct function of the system, indication of control station in operation, alarm display).

3.3.3 When transferring the control location, no significant alteration of the controlled equipment is to occur. Transfer of control is to be protected by an audible warning and acknowledged by the receiving remote control location. The main remote control location is to be able to take control without acknowledgment.

3.3.4 Failure in remote control systems is not to prevent local operation.

3.4 Automatic control systems

3.4.1 Automatic control is to be stable in the range of the controller in normal working conditions.

3.4.2 Automatic control is to have instrumentation to verify the correct function of the system.

3.4.3 For machinery systems which due to their complexity requires continuous automatic control, manual control of the individual Equipment Under Control may not be feasible. In such cases, local means are to be provided to both monitor the concerned process- and to enable/disable any automatic functions / modes (a typical example is the gas supply system to a gas fuelled engine).

4 Machinery control and monitoring installations

4.1 Open loop control

4.1.1 Main engines and essential equipment shall be provided with effective means for the control of its operation. All controls for essential equipment shall be independent or so designed that failure of one system does not impair the performance of other systems, see also [1.1.2].

4.1.2 Control equipment must have built-in protection features where incorrect operation would result in serious damage or in the loss of essential functions.

4.1.3 The consequences of control commands must be indicated at the respective control station.

4.1.4 Controls shall correspond with regard to their position and direction of operation to the system being controlled respective to the direction of motion of the vessel.

4.1.5 It shall be possible to control the essential equipment at or near to the equipment concerned.

4.1.6 Where controls are possible from several control stations, the following shall be observed:

- Competitive commands shall be prevented by suitable interlocks. The control station in operation must be recognizable as such.
- Taking over of command shall only be possible with the authorization of the user of the control station which is in operation.
- Precautions shall be taken to prevent changes to desired values due to a change-over in control station.

4.1.7 Open loop control for speed and power of main engines are subject to mandatory type testing.

4.2 Closed loop control

4.2.1 Closed loop control shall keep the process variables under normal conditions within the specified limits.

4.2.2 Closed loop controls must maintain the specified reaction over the full control range. Anticipated variations of the parameters must be considered during the planning.

4.2.3 Defects in a control loop shall not impair the function of operationally essential control loops.

4.2.4 The power supply of operationally essential control loops shall be monitored and power failure must be signalled by an alarm.

4.2.5 Closed loop control for speed and power of main engines are subject to mandatory type testing.

4.3 Integration of systems for essential equipment

4.3.1 The integration of functions of independent equipment shall not decrease the reliability of the single equipment.

4.3.2 A defect in one of the subsystems (individual module, unit or subsystem) of the integrated system shall not affect the function of other subsystems.

4.3.3 Any failure in the transfer of data of autonomous subsystems which are linked together shall not impair their independent function.

4.3.4 Essential equipment must also be capable of being operated independently of integrated systems.

4.4 Control of machinery installations

4.4.1 Machinery installations are to be equipped with monitoring equipment as detailed in Tab 1.

Table 1 : Control and monitoring of machinery installations

Symbol convention H = High, HH = Very high, L = Low I = Individual alarm, G = Group alarm		Monitoring				
Identification of system parameter		Alarms	Indication local	Alarms wheelhouse **(1)**	Indication wheelhouse	Shut down
MAIN ENGINE						
Engine speed	All engines		X			
	Engine power > 220kW	HH	X	G		X
Shaft revolution indicator			X			
Lubricating oil pressure		L	X	G		
Lubricating oil temperature		H	X	G		
Fresh cooling water system inlet pressure **(2)**		L	X	G		
Fresh cooling water system outlet temperature **(2)**		H	X	G		
Fuel oil temperature for engines running on HFO		L	X	G		
Exhaust gas temperature (single cylinder when the dimensions permit)			X			
Starting air pressure		L	X	G	X	
Charge air pressure			X			
Control air pressure			X			
Exhaust gas temperature at turbocharger inlet/outlet (where the dimensions permit)			X			
Manual emergency stop of propulsion		X	X			X **(3)**
Fault in the electronic governor		X	X	G		
REDUCTION GEAR						
Tank level			X			
Lubricating oil temperature			X			
Lubricating oil pressure			X			
AUXILIARY MACHINE **(4)**						
Engine speed	All engines		X			
	Engine power > 220 kW	HH	X	G		X
Low pressure cooling water system **(2)**		L	X	G		
Fresh cooling water system outlet temperature **(2)**		H	X	G		
Lubricating oil pressure		L	X	G		
Fault in the electronic governor		X	X	G		
DIESEL BOW THRUSTER **(4)**						
Engine speed	All engines		X			
	Engine power > 220 kW	HH	X	G		X
Low pressure cooling water system **(2)**		L	X	G		
Fresh cooling water system outlet temperature **(2)**		H	X	G		
Direction of propulsion			X			
Lubricating oil pressure		L	X	G		
Lubricating oil temperature			X			
Fault in the electronic governor		X	X	G		

Symbol convention H = High, HH = Very high, L = Low I = Individual alarm, G = Group alarm	Monitoring				
Identification of system parameter	Alarms	Indication local	Alarms wheelhouse **(1)**	Indication wheelhouse	Shut down
PROPULSION					
Propulsion remote control ready		X			
Pitch control		X			
ELECTRICITY					
Earth fault (when insulated network)	X	X	G		
Main supply power failure	X	X	G		
FUEL OIL TANKS					
Fuel oil level in service tank or tanks supplying directly services essential for safety or navigation	L	X	G		
STEERING GEAR					
Rudder angle indicator		X		X	
Level of each hydraulic fluid	L	X	I	X	
Indication that electric motor of each power unit is running		X		X	
Failure of rate of turn control	X		I	X	
Overload failure	X	X	I	X	
Phase failure	X	X	I	X	
Loss of power supply	X	X	I	X	
Loss of control supply	X	X	I	X	
STEAM BOILER					
Water level	L+H	X			
	LL				X
Circulation stopped (when forced circulation boiler)	X				X
Flame failure	X				X
Temperature in boiler	H				
Steam pressure	HH	X			X
THERMAL OIL					
Thermal fluid temperature heater outlet	H	X			X **(5)**
Thermal fluid pressure pump discharge	H	X			X
Thermal fluid flow through heating element	L	X			
	LL				X **(5)**
Expansion tank level	L	X			
	LL				X **(6)**
Expansion tank temperature	H				
Forced draft fan stopped	X				X
Burner flame failure	X				X
Flue gas temperature heater outlet	H				
	HH				X **(6)**
FIRE					
Fire detection	X			X	
Fire manual call point	X			X	
Automatic fixed fire extinguishing system activation, if fitted	X			X	
FLOODING					
Level of machinery space bilges/drain wells	X			X	

Symbol convention H = High, HH = Very high, L = Low I = Individual alarm, G = Group alarm	Monitoring				
Identification of system parameter	Alarms	Indication local	Alarms wheelhouse **(1)**	Indication wheelhouse	Shut down
ALARM SYSTEM					
Alarm system power supply failure	X	X		X	

(1) Group of alarms are to be detailed in the machinery space or control room (if any).
(2) A combination of level indication/alarm in expansion tank and indication/alarm cooling water temperature can be considered as equivalent with consent of the Society.
(3) Openings of clutches can, with the consent of the Society, be considered as equivalent.
(4) Exemptions can be given for diesel engines with a power of 50 kW and below.
(5) Shut-off of heat input only.
(6) Stop of fluid flow and shut-off of heat input.

4.4.2 The remote control shall be capable to control speed, direction of thrust, and as appropriate torque or propeller pitch without restriction under all navigating and operating conditions.

4.4.3 Single lever control is to be preferred for remote control systems. Lever movement shall be in accordance to the desired course of the vessel. Commands entered into the remote control system from the wheelhouse must be recognizable at all control stations.

4.4.4 The remote control system shall carry out commands which are ordered, including emergency manoeuvres, in accordance with the propulsion plant manufacturer's specifications.

Where critical speed ranges are incorporated, their quick passing is to be guaranteed and a reference input within them have to be inhibited.

4.4.5 With each new command, stored commands must be erased and replaced by the new input.

4.4.6 In the case of set speed stages, a facility must be provided to change the speed in the individual stages.

4.4.7 An overload limitation facility is to be provided for the propulsion machinery.

4.4.8 It must be possible to stop the propeller thrust from the wheelhouse independently of the remote control system.

4.4.9 Following emergency manual shutdown or automatic shutdown of the main propulsion plant, a restart shall only be possible via the stop position of the command entry.

4.4.10 The failure of the remote control system and of the control power shall not result in any sudden change in the propulsion power nor in the speed and direction of rotation of the propeller. In individual cases, the Society may approve other failure conditions, whereby it is assumed that:

- there is no increase in vessel's speed
- there is no course change
- no unintentional start-up processes are initiated.

Local control must be possible from local control positions. The local control positions are to be independent from remote control of propulsion machinery and continue to operate 15 minutes after a blackout.

4.4.11 The failure of the remote control system and of the control power is to be signalled by an alarm.

4.4.12 Wheelhouse and engine room are to be fitted with indicators indicating that the remote control system is operative. The wheelhouse and the machinery space are to be provided with indicators showing:

- propeller speed and direction of rotation
- pitch of controllable pitch propeller.

4.4.13 Remote control systems for main propulsion plants are subject to mandatory type approval.

4.4.14 The transfer of control between the wheelhouse and machinery space shall be possible only in the machinery area.

4.4.15 It shall be ensured that control is only possible from one control station at any time. Transfer of command from one control station to another shall only be possible when the respective control levers are in the same position and when a signal to accept the transfer is given from the selected control station. A display at each control station shall indicate whether the control station in question is in operation.

4.4.16 Each local control position, including partial control (e.g. local control of controllable pitch propellers or clutches) is to be provided with means of communication with the remote control position.

5 Alarm systems

5.1 General requirements

5.1.1 Alarm systems shall indicate unacceptable deviations from operating figures optically and audibly. The operative state of the system is to be indicated in the wheelhouse and on the equipment.

5.1.2 Optical signals shall be individually indicated. The meaning of the individual indications must be clearly identifiable by text or symbols.

If a fault is indicated, the optical signal must remain visible until the fault has been eliminated. It must be possible to distinguish between an optical signal which has been acknowledged and one that has not been acknowledged.

5.1.3 Alarm systems shall be designed according to the closed-circuit principle or the monitored open circuit principle. Equivalent monitoring principles are permitted.

5.1.4 The power supply shall be monitored and a failure shall cause an alarm. Test facilities are required for the operation of light displays.

The alarm system shall be supplied from the main power source and shall have battery support for at least 15 minutes.

5.2 Alarm functions

5.2.1 Alarm activation

Alarms are to be activated when abnormal conditions appear in the machinery, which need the intervention of personnel on duty, and on the automatic change-over, when standby machines are installed.

An existing alarm is not to prevent the indication of any further fault.

5.2.2 Acknowledgement of alarms

It must be possible to acknowledge audible signals. The acknowledgement of an alarm shall not inhibit an alarm which has been generated by new causes.

Alarms must be discernible under all operating conditions. Where this cannot be achieved, for example due to the noise level, additional optical signals, e.g. flashing lights must be installed.

Transient faults which are self-correcting without intervention shall be memorized and indicated by optical signals which shall only disappear when the alarm has been acknowledged.

5.2.3 Time delay of alarm

Alarm delays shall be kept within such time limits that any risk to the monitored system is prevented if the limit value is exceeded.

5.2.4 Pressure alarms

Pressure alarms may in general not be delayed by more than 2 s. Level alarms are to be delayed sufficiently to ensure that the alarm is not tripped by brief fluctuations in level.

5.2.5 A failure of the power supply or disconnection of the system shall not alter the limit value settings at which a fault is signalled.

5.2.6 The fault signalling systems of main engines with engine-driven pumps are to be so designed that variations in operating parameters due to manoeuvres do not trip the alarm.

5.2.7 It is recommended that input devices approved by the Society should be used.

5.2.8 It is recommended that the alarm signals should be automatically suppressed when the main engine and auxiliaries are taken out of service.

5.3 Alarms arrangements

5.3.1 Alarms are to be given at manned location in the machinery control position, if any, or in the wheelhouse and are to take the form of individual visual displays and collective audible signals. The audible alarm shall sound throughout the whole machinery space, at manned location in the machinery control position and at the wheelhouse. If this cannot be ensured because of the noise level, additional visual alarms such as flash signals shall be installed.

5.3.2 Simultaneously with a collective alarm signal, an acknowledgeable audible alarm shall be given at manned location in the machinery control position and in the wheelhouse which, following acknowledge, shall be available for further signals. It must be possible to stop audible signals independently of acknowledging the visual signal. Acknowledgement of optical alarms shall only be possible where the fault has been indicated as an individual signal and a sufficient overview of the concerned process is been given.

5.3.3 Where the alarm system contents individual visual displays in the machinery space, the visual fault signals in the wheelhouse may be arranged in at least three groups as collective alarms in accordance with their urgency, if this is necessary due to the scope of the plant:

- Group 1: alarms signalling faults which require immediate shutdown of the main engine (red light)
- Group 2: alarms signalling faults which require a reduction in power of the main engine (red light)
- Group 3: alarms signalling faults which do not require Group 1 or Group 2 measures (yellow light).

6 Safety devices and systems

6.1 Safety devices

6.1.1 The design of safety devices shall be as simple as possible and must be reliable and inevitable in operation. Proven safety devices which are not depending on a power source are to be preferred.

6.1.2 The suitability and function of safety devices must be demonstrated in the given application.

6.1.3 Safety devices shall be designed so that potential faults such as, for example, loss of voltage or a broken wire shall not create a hazard to human life, vessel or machinery.

These faults and also the tripping of safety devices shall be signalled by an alarm.

6.1.4 The adjustment facilities for safety devices shall be designed so that the last setting can be detected.

6.1.5 Where auxiliary energy is needed for the function of safety devices, this has to be monitored and a failure has to be alarmed.

6.2 Safety systems

6.2.1 Safety systems shall be independent of open and closed loop control and alarm systems. Faults in one system shall not affect other systems.

Deviations from this requirement may be allowed for redundant equipment where this would entail no risk to human life and where vessel safety would not be compromised.

6.2.2 Safety systems shall be assigned to systems which need protection.

6.2.3 Where safety systems are provided with overriding arrangements, these shall be protected against unintentional operation. The actuation of overriding arrangements shall be indicated and recorded.

6.2.4 The monitored open-circuit principle shall be used for safety systems. Alternatively, the closed circuit principle shall be applied where the provisions of national Regulations demand it. (e.g. boiler and oil fired systems).

Equivalent monitoring principles are permitted. Faults, and also the tripping of safety systems shall be indicated by an alarm and recorded.

6.2.5 Safety systems shall be designed for preference using conventional technology (hard wired).

6.2.6 The power supply shall be monitored and loss of power shall be indicated by an alarm and recorded.

The power supply to the safety system is to be maintained for at least 15 minutes following a possible failure of the vessel's general supply network. Separate provision shall be made for this.

6.2.7 Safety systems are to perform the following functions when hazard limits are reached:

a) temporary adaptation of operation to the remaining possibilities (slow down or signal to reduce power)

b) protection of machinery and boilers from critical operating conditions (shutdown or signal to shut down).

Within certain limits, safety systems provide redundancy for the alarm system.

6.3 Testing

6.3.1 The safety systems are to be tested in accordance with the requirements in Ch 3, Sec 6.

SECTION 3 COMPUTER BASED SYSTEMS

1 General

1.1 Scope

1.1.1 These Rules apply additionally, if computers are used for tasks essential to the safety of the vessel, cargo, crew or passengers and are subject to classification.

1.2 References to other Rules and Regulations

1.2.1 IEC 61508 or EN 61508 "Functional safety of electrical/ electronic/ programmable electronic safety related systems".

1.3 Requirements applicable to computer systems

1.3.1 Computer systems shall fulfill the requirements of the process under normal and abnormal operating conditions. The following shall be considered:

- danger to persons
- environmental impact
- endangering of technical equipment
- usability of computer systems
- operability of all equipment and systems in the process.

1.3.2 If process times for important functions of the system to be supervised are shorter than the reaction times of a supervisor and therefore damage cannot be prevented by manual intervention, means of automatic intervention shall be provided.

1.3.3 Computer systems shall be designed in such a way that they can be used without special previous knowledge. Otherwise, appropriate assistance shall be provided for the user.

2 Requirement classes

2.1 General requirements

2.1.1 Computer systems are assigned, on the basis of a risk analysis, to requirement classes as shown in Tab 1. This assignment shall be accepted by the Society. Tab 2 gives examples for such an assignment.

2.1.2 The assignment is divided into five classes considering the extent of the damage caused by an event.

2.1.3 Considered is only the extent of the damage directly caused by the event, but not any consequential damage.

2.1.4 The assignment of a computer system to a corresponding requirement class is made under the maximum possible extent of direct damage to be expected.

2.1.5 In addition to the technical measures stated in this section also organizational measures may be required if the risk increases. These measures shall be agreed with the Society.

2.2 Risk parameters

2.2.1 The following aspects may lead to assignment to a different requirement class, see Tab 1.

a) Dependence on the type and size of vessel:
   - number of persons endangered
   - transportation of dangerous goods
   - vessel's speed.

b) Presence of persons in the endangered area with regard to duration respectively frequency:
   - rarely
   - often
   - very often
   - at all times.

c) Averting of danger

   To evaluate the possibility of danger averting, the following criteria shall be considered:
   - operation of the technical equipment with or without supervision by a person
   - temporal investigation into the processing of a condition able to cause a damage, the alarming of the danger and the possibilities to avert the danger.

d) Probability of occurrence of the dangerous condition

   This assessment is made without considering the available protection devices.

   Probability of occurrence:
   - very low
   - low
   - relatively high.

e) Complexity of the system:
   - integration of various systems
   - linking of functional features.

2.2.2 The assignment of a system into the appropriate requirement class shall be agreed on principle with the Society.

Table 1 : Definition of requirement classes

Requirement class	Extent of damage		
	Effects on persons	Effects on the environment	Technical damage
1	none	none	insignificant
2	slight injury	insignificant	minor
3	serious, irreversible injury	significant	fairly serious
4	loss of human life	critical	considerable
5	much loss of human life	catastrophic	loss

Table 2 : Examples of assignment into requirement classes

Requirement class	Examples
1	Supporting systems for maintenance Systems for general administrative tasks Information and diagnostic systems
2	"Off line" cargo computers Navigational instruments Machinery alarm and monitoring systems Tank capacity measuring equipment
3	Controls for auxiliary machinery Speed governors "On line" cargo computers, networked (bunkers, draughts, etc.) Remote control for main propulsion Fire detection systems Fire extinguishing systems Integrated monitoring and control systems Control systems for tank and fuel Rudder control systems Course control systems Machinery protection systems/ equipment
4	Burner control systems for boilers and thermal oil heater Electronic injection systems
5	Systems where manual intervention to avert danger in the event of failure or malfunction is no longer possible and the extent of damage under requirement class 5 can be reached

2.3 Measures required to comply with the requirement class

2.3.1 The measures to comply with the requirements of classes 4 and 5 may require for computer equipment and conventional equipment a separation or for the computer equipment a redundant, diversified design.

2.3.2 Protection against modification of programs and data

The measures required depend on the requirement class and the system configuration (see Tab 3).

Table 3 : Program and data protection measures in relation to the requirement class (examples)

Requirement class	Program/Data memory
1	Protection measures are recommended e.g. diskette, magnetic disk etc.
2	Protection against unintentional/unauthorised modification e.g. buffered RAM etc.
3	Protection against unintentional/unauthorised modification and loss of data e.g. EEPROM etc.
4	No modifications by the user possible e.g. EPROM etc.
5	No modifications possible e.g. ROM etc.

Computer systems shall be protected against unintentional or unauthorized modification of programs and data.

For large operating systems and programs, other storage media such as hard disks may be used by agreement.

Significant modifications of program contents and system specific data, as well as a change of version, shall be documented and must be retraceable.

For systems of requirement class 4 and 5 all modifications, the modifications of parameters too, shall be submitted for review / approval.

The examples of program and data protection shown in Tab 3 may be supplemented and supported by additional measures in the software and hardware, for example:

- user name, identification number
- code word for validity checking, key switch
- assignment of authorizations in the case of common use of data/withdrawal of authorizations for the change or erasing of data
- coding of data and restriction of access to data, virus protection measures
- recording of workflow and access operations.

Note 1: A significant modification is a modification which influences the functionality and/or safety of the system.

3 System configuration

3.1 General requirements

3.1.1 The technical design of a computer system is given by its assignment to a requirement class. The measures listed below for example, graded according to the requirements of the respective requirement class, shall be ensured.

3.1.2 For functional units, evidence shall be proved that the design is self-contained and produces no feedback.

3.1.3 The computer systems must be fast enough to perform autonomous control operations and to inform the user correctly and carry out his instructions in correct time under all operating conditions.

3.1.4 Computer systems shall monitor the program execution and the data flow automatically and cyclically e.g. by means of plausibility tests, monitoring of the program and data flow over time.

3.1.5 In the event of failure and restarting of computer systems, the process shall be protected against undefined and critical states.

3.2 Power supply

3.2.1 The power supply shall be monitored and failures shall be indicated by an alarm.

3.2.2 Redundant systems shall be separately protected against short circuits and overloads and shall be selectively fed.

3.3 Hardware

3.3.1 The design of the hardware shall be clear for easy access to interchangeable parts for repairs and maintenance.

3.3.2 Plug-in cards and plug-in connections shall be appropriately marked to protect against unintentional transposition or, if inserted in an incorrect position, shall not be destroyed and not cause any malfunctions which might cause a danger.

3.3.3 For integrated systems, it is recommended that subsystems be electrically isolated from each other.

3.3.4 Computers shall preferably be designed without forced ventilation. If forced ventilation of the computers is necessary, it shall be ensured that an alarm is given in the case of an unacceptable rise of temperature.

3.4 Software

3.4.1 Examples of software are:

- operating systems
- application software
- executable code
- database contents and structures
- bitmaps for graphic displays
- logic programs in PAL's
- microcode for communication controllers.

3.4.2 The manufacturer shall prove that a systematic procedure is followed during all the phases of software development.

3.4.3 After drafting the specification, the test scheduling shall be made (listing the test cases and establishment of the software to be tested and the scope of testing). The test schedule lays down when, how and in what depth testing shall be made.

3.4.4 The quality assurance measures and tests for the production of software and the punctual preparation of the documentation and tests must be retraceable.

3.4.5 The version of the Software with the relevant date and release have to be documented and shall be recognizable of the assignment to the particular requirement class.

3.5 Data communication links

3.5.1 The reliability of data transmission shall be suitable for the particular application and the requirement class and specified accordingly.

3.5.2 The architecture and the configuration of a network shall be suitable for the particular requirement class.

3.5.3 The data communication link shall be continuously self-checking, for detection of failures on the link itself and for data communication failure on the nodes.

3.5.4 When the same data communication link is used for two or more essential functions, this link shall be redundant.

3.5.5 Switching between redundant links shall not disturb data communication or continuous operation of functions.

3.5.6 To ensure that data can be exchanged between various systems, standardized interfaces shall be used.

3.5.7 If approved systems are extended, proof of trouble free operation of the complete system shall be provided.

3.6 Integration of systems

3.6.1 The integration of functions of independent systems shall not decrease the reliability of a single system.

3.6.2 A defect in one of the subsystem of the integrated system shall not affect the functions of other subsystems.

3.6.3 A failure of the transfer of data between connected autarkic subsystems shall not impair their independent functions.

3.7 User interface

3.7.1 The handling of a system shall be designed for ease of understanding and user-friendliness and shall follow ergonomic standards.

3.7.2 The status of the computer system shall be recognizable.

3.7.3 Failure or shutdown of sub-systems or functional units shall be indicated by an alarm and displayed at every operator station.

3.7.4 For using computer systems, a general comprehensible user guide shall be provided.

3.8 Input devices

3.8.1 The feedback of control commands shall be indicated.

3.8.2 Dedicated function keys shall be provided for frequently recurring commands. If multiple functions are assigned to keys, it shall be possible to recognize which of the assigned functions are active.

3.8.3 Operator panels located on the bridge shall be individually illuminated. The lighting must be adapted nonglare to the prevailing ambient conditions.

3.8.4 Where equipment operations or functions may be changed via keyboards, appropriate measures shall be provided to prevent an unintentional operation of the control devices.

3.8.5 If the operation of a key is able to cause dangerous operating conditions, measures shall be taken to prevent the execution by a single action only, such as:

- use of a special key lock
- use of two or more keys.

3.8.6 Competitive control interventions shall be prevented by means of interlocks. The control station in operation shall be indicated as such.

3.8.7 Controls shall correspond with regard to their position and direction of operation to the controlled equipment.

3.9 Output devices

3.9.1 The size, colour and density of text, graphic information and alarm signals displayed on a visual display unit shall be such that it may be easily read from the normal operator position under all lighting conditions.

3.9.2 Information shall be displayed in a logical priority.

3.9.3 If alarm messages are displayed on colour monitors, the distinctions in the alarm status shall be ensured even in the event of failure of a primary colour.

3.10 Graphical user interface

3.10.1 Information shall be presented clearly and intelligibly according to its functional significance and association. Screen contents shall be logically structured and their representation shall be restricted to the data which is directly relevant for the user.

3.10.2 When general purpose graphical user interfaces are employed, only the functions necessary for the respective process shall be available.

3.10.3 Alarms shall be visually and audibly presented with priority over other information in every operating mode of the system; they shall be clearly distinguishable from other information.

4 Testing

4.1 General

4.1.1 Computer systems are to be tested in accordance with the requirements in Ch 3, Sec 6.

SECTION 4 CONSTRUCTIONAL REQUIREMENTS

1 General

1.1 General

1.1.1 Automation systems are to be so constructed as:

- to withstand the environmental conditions, as defined in Ch 2, Sec 2, [1], in which they operate
- to have necessary facilities for maintenance work.

1.2 Materials

1.2.1 Materials are generally to be of the flame-retardant type.

1.2.2 Connectors are to be able to withstand standard vibrations, mechanical constraints and corrosion conditions as given in Ch 3, Sec 6.

1.3 Component design

1.3.1 Automation components are to be designed to simplify maintenance operations. They are to be so constructed as to have:

- easy identification of failures
- easy access to replaceable parts
- easy installation and safe handling in the event of replacement of parts (plug and play principle) without impairing the operational capability of the system, as far as practicable
- facility for adjustment of set points or calibration
- test point facilities, to verify the proper operation of components.

2 Power electronic systems

2.1 General

2.1.1 For power electronics in electrical propulsion plants, see Ch 2, Sec 13.

2.2 Construction

2.2.1 Each power-electronics system shall be provided with separate means for disconnection from the mains.

In the case of consumers up to a nominal current of 315 A the combination fuse-contactor may be used. In all other cases a circuit breaker shall be provided on the mains side.

2.2.2 Equipment shall be readily accessible for purposes of measurement and repair. Devices such as simulator circuits, test sockets, indicating lights, etc. are to be provided for functional supervision and fault location.

2.2.3 Control and alarm electronics must be galvanically separated from power circuits.

2.2.4 External pulse cables are to be laid twisted in pairs and screened, and kept as short as possible.

2.3 Rating and design

2.3.1 Mains reactions of power electronics facilities shall be taken into consideration in the planning of the overall installation.

2.3.2 Rectifier systems must guarantee secure operation even under the maximum permissible voltage and frequency fluctuations, see Ch 2, Sec 5, [1]. In the event of unacceptably large frequency and/or voltage variations in the supply voltage, the system must shut-off or remain in a safe operating condition.

2.3.3 The semiconductor rectifiers and the associated fuses shall be so selected that their load current is at least 10% less than the limit current determined in accordance with the coolant temperature, the load and the mode of operation.

2.3.4 Electrical charges in power electronic modules must drop to a voltage of less than 50 V in a period of less than 5 s after disconnection from the mains supply. Should longer periods be required for discharge, a warning label is to be affixed to the appliance.

2.3.5 If the replacement of plug-in printed circuit boards while the unit is in operation can cause the destruction of components or the uncontrolled behaviour of drives, a caution label must be notifying to this effect.

2.3.6 The absence of external control signals, e.g. due to a circuit break, shall not cause a dangerous situation.

2.3.7 Control-circuit supplies are to be safeguarded against unintended disconnection, if this could endanger or damage the plant.

2.3.8 It is necessary to ensure that, as far as possible, faults do not cause damage in the rest of the system, or in other static converters.

2.3.9 Special attention shall be paid to the following points:

- mutual interference of static converters connected to the same busbar system
- voltage distortion and reacting to other consumers
- selection of the ratio between the subtransient reactance of the system and the commutating reactance of the static converter

- consideration of reactions from rectifier installations on the commutation of DC machines
- influence by harmonics and high-frequency interference.

Where filter circuits and capacitors are used for reactive current compensation, attention is to be paid to the:

- reaction on the mean and peak value of the system voltage in case of frequency fluctuations
- inadmissible effects on the voltage regulation of generators.

2.4 Cooling

2.4.1 Natural cooling is preferred.

2.4.2 The safety in operation shall be proved for liquid cooling and forced cooling.

2.4.3 An impairment of cooling shall not result in unacceptable overtemperatures, an overtemperature alarm shall be provided.

2.5 Control and monitoring

2.5.1 Control, adjustment and monitoring must ensure that the permissible operating values of the facilities are not exceeded.

2.6 Protection equipment

2.6.1 Power electronic equipment shall be protected against exceeding of their current and voltage limits.

For protective devices, it must be ensured that upon actuating:

- the output will be reduced or defective part-systems will be selectively disconnected
- drives will be stopped under control
- the energy stored in components and in the load circuit cannot have a damaging effect, when switching off.

2.6.2 Special semiconductor fuses shall be monitored. After tripping the equipment has to be switched off, if this is necessary for the prevention of damage. Activating of a safety device shall trigger an alarm.

2.6.3 Equipment without fuses is permissible if a short circuit will not lead to the destruction of the semiconductor components.

3 Pneumatic systems

3.1 General

3.1.1 Pneumatic automation systems are to comply with Ch 1, Sec 10, [17].

3.1.2 Pneumatic circuits of automation systems are to be independent of any other pneumatic circuit on board.

4 Hydraulic systems

4.1 General

4.1.1 Hydraulic automation systems are to comply with Ch 1, Sec 10, [14].

4.1.2 Suitable filtering devices are to be incorporated into the hydraulic circuits.

4.1.3 Hydraulic circuits of automation systems are to be independent of any other hydraulic circuit on board.

5 Automation consoles

5.1 General

5.1.1 Automation consoles are to be designed on ergonomic principles. Handrails are to be fitted for safe operation of the console.

5.2 Indicating instruments

5.2.1 The operator is to receive feed back information on the effects of his orders.

5.2.2 Indicating instruments and controls are to be arranged according to the logic of the system in control. In addition, the operating movement and the resulting movement of the indicating instrument are to be consistent with each other.

5.2.3 The instruments are to be clearly labelled. When installed in the wheelhouse, all lighted instruments of consoles are to be dimmable, where necessary.

5.3 VDU's and keyboards

5.3.1 Visual display units in consoles are to be located so as to be easily readable from the normal position of the operator. The environmental lighting is not to create any reflection which makes reading difficult.

5.3.2 The keyboard is to be located to give easy access from the normal position of the operator. Special precautions are to be taken to avoid inadvertent operation of the keyboard.

SECTION 5 INSTALLATIONS REQUIREMENTS

1 General

1.1

1.1.1 Automation systems are to be installed taking into account:

- the maintenance requirements (test and replacement of systems or components)
- the influence of EMI. The IEC 60533 standard is to be taken as guidance
- the environmental conditions corresponding to the location in accordance with Ch 2, Sec 2, [1] and Ch 2, Sec 2, [6.2].

1.1.2 Control stations are to be arranged for the convenience of the operator.

1.1.3 Automation components are to be properly fitted. Screws and nuts are to be locked, where necessary.

2 Sensors and components

2.1 General

2.1.1 Sensors are to be selected and located such that their output is a realistic measure of the parameter. Sensors are to be installed in places where there is a minimum risk for damage during normal overhaul and maintenance.

2.1.2 The enclosure of the sensor and the cable entry are to be appropriate to the space in which they are located.

2.1.3 Means are to be provided for testing, calibration and replacement of automation components. Such means are to be designed, as far as practicable, so as to avoid perturbation of the normal operation of the system.

2.1.4 A tag number is to identify automation components and is to be clearly marked and attached to the component. These tag numbers are to be collected on the instrument list mentioned in Ch 3, Sec 1, Tab 1.

2.1.5 Electrical connections are to be arranged for easy replacement and testing of sensors and components. They are to be clearly marked.

2.1.6 Low level signal sensors are to be avoided. When installed they are to be located as close as possible to amplifiers, so as to avoid external influences. Failing this, the wiring is to be provided with suitable EMI protection and temperature correction.

2.2 Temperature elements

2.2.1 Temperature sensors, thermostats or thermometers are to be installed in a thermowell of suitable material, to permit easy replacement and functional testing. The thermowell is not to significantly modify the response time of the whole element.

2.3 Pressure elements

2.3.1 Three-way valves or other suitable arrangements are to be installed to permit functional testing of pressure elements, such as pressure sensors, pressure switches, without stopping the installation.

2.3.2 In specific applications, where high pulsations of pressure are likely to occur, a damping element, such as a capillary tube or equivalent, is to be installed.

2.4 Level switches

2.4.1 Level switches fitted to flammable oil tanks, or similar installations, are to be installed so as to reduce the risk of fire.

3 Cables

3.1 Installation

3.1.1 Cables are to be installed according to the requirements in Ch 2, Sec 12, [7].

3.1.2 Suitable installation features such as screening and/or twisted pairs and/or separation between signal and other cables are to be provided in order to avoid possible interference on control and instrumentation cables.

3.1.3 Specific transmission cables (coaxial cables, twisted pairs, etc.) are to be routed in specific cable-ways and mechanically protected to avoid loss of any important transmitted data. Where there is a high risk of mechanical damage, the cables are to be protected with pipes or equivalent.

3.1.4 The internal radius of bend for the installation of cables is to be chosen according to the type of cable as recommended by the manufacturer.

For mineral insulated cables, coaxial cables or fibre optic cables, whose characteristics may be modified, special precautions are to be taken according to the manufacturer's instructions.

3.2 Cable terminations

3.2.1 Cable terminations are to be arranged according to the requirements in Part C, Chapter 2. Particular attention is to be paid to the connections of cable shields. Shields are to be

connected only at the sensor end when the sensor is earthed, and only at the processor end when the sensor is floating.

3.2.2 Cable terminations are to be able to withstand the identified environmental conditions (shocks, vibrations, salt mist, humidity, etc.).

3.2.3 Terminations of all special cables such as mineral insulated cables, coaxial cables or fibre optic cables are to be arranged according to the manufacturer's instructions.

4 Pipes

4.1

4.1.1 For installation of piping circuits used for automation purposes, see the requirements in Ch 1, Sec 10.

4.1.2 As far as practicable, piping containing liquids is not to be installed in or adjacent to electrical enclosures.

4.1.3 Hydraulic and pneumatic piping for automation systems is to be marked to indicate its function.

5 Automation consoles

5.1 General

5.1.1 Consoles or control panels are to be located so as to enable a good view of the process under control, as far as practicable. Instruments are to be clearly readable in the ambient lighting.

5.1.2 The location is to be such as to allow easy access for maintenance operations.

SECTION 6 TESTING

1 General

1.1 General

1.1.1 Automation systems are to be tested for type approval, at works and on board, when required. Tests are to be carried out under the supervision of a Surveyor of the Society.

1.1.2 The type testing conditions for electrical, control and instrumentation equipment, computers and peripherals are described in [2].

1.1.3 Automation systems are to be inspected at works, according to the requirements of Article [3], in order to check that the construction complies with the Rules.

1.1.4 Automation systems are to be tested when installed on board and prior to sea trials, to verify their performance and adaptation on site, according to [4].

2 Type approval

2.1 General

2.1.1 Type approval of the automation systems is to be performed according to NR467, Pt C, Ch 3, Sec 6, [2].

3 Acceptance testing

3.1 General

3.1.1 Acceptance tests are generally to be carried out at the manufacturer's facilities before the shipment of the equipment, when requested.

Acceptance tests refer to hardware and software tests as applicable.

3.2 Hardware testing

3.2.1 Final acceptance will be granted subject to:

- the results of the tests listed in [3.2.2]
- the type test report or type approval certificate.

3.2.2 Hardware acceptance tests include, where applicable:

- visual inspection
- operational tests and, in particular:
  - tests of all alarm and safety functions
  - verification of the required performance (range, calibration, repeatability, etc.) for analogue sensors
  - verification of the required performance (range, set points, etc.) for on/off sensors
  - verification of the required performance (range, response time, etc.) for actuators
  - verification of the required performance (full scale, etc.) for indicating instruments
- endurance test (burn-in test or equivalent)
- high voltage test
- hydrostatic tests.

Additional tests may be required by the Society.

3.3 Software testing

3.3.1 Software acceptance tests of computer based systems are to be carried out according to Ch 3, Sec 3, [3.4].

4 On board tests

4.1 General

4.1.1 Testing is to be performed on the completed system comprising actual hardware components with the final application software, in accordance with an approved test program. After test completion, installed versions of computer based systems software are to be recorded inside the Software Registry.

4.1.2 On board tests are to be carried out on automation systems associated with essential services to verify their compliance with the Rules, by means of visual inspection and the performance and functionality according to Tab 1.

On board testing is to verify that correct functionality has been achieved with all systems integrated.

Table 1 : On board tests

Equipment	Nature of tests
Electronic equipment	Main hardware and software functionalities with all systems integrated
Analogue sensors	Signal calibration, trip set point adjustment
On/off sensors	Simulation of parameter to verify and record the set points
Actuators	Checking of operation in whole range and performance (response time, pumping)
Reading instruments	Checking of calibration, full scale and standard reference value

When completed, automation systems are to be such that a single failure, for example loss of power supply, is not to result in a major degradation of the propulsion or steering of the ship. In addition, a blackout test is to be carried out to show that automation systems are continuously supplied.

Upon completion of on board tests, test reports are to be made available to the Surveyor.

4.1.3 For wireless data communication equipment, tests during harbour and navigation trials are to be conducted to demonstrate that radio-frequency transmission does not cause failure of any equipment and does not itself fail as a result of electromagnetic interference during expected operating conditions.

Part C
Machinery, Electricity and Fire

Chapter 4
FIRE PROTECTION, DETECTION AND EXTINCTION

SECTION 1 GENERAL

SECTION 2 PREVENTION OF FIRE

SECTION 3 DETECTION AND ALARM

SECTION 4 FIRE FIGHTING

SECTION 5 ESCAPE

SECTION 1 GENERAL

1 Application

1.1 General

1.1.1 This Chapter applies to fire protection, fire detection and fire extinguishing equipment.

1.1.2 Fire extinguishing systems not dealt with in these Rules are to be in compliance with other applicable Rules of the Society.

1.2 Statutory Regulations

1.2.1 Where available, statutory Regulations in the operating area of the vessel (e.g. European directive) are to take precedence over the requirements of this Chapter.

1.3 Applicable requirements depending on vessel type

1.3.1 Unless expressly provided otherwise:

a) requirements not referring to a specific vessel type apply to all vessels

b) additional requirements on fire protection, fire detection and fire extinction on passenger vessels are given in Pt D, Ch 1, Sec 6, [3]

c) additional requirements on fire protection, fire detection and fire extinction on tankers intended for the carriage of dangerous goods are given in the relevant Sections of Part D, Chapter 3

d) additional requirements on fire protection, fire detection and fire extinction on dry cargo vessels intended for the carriage of dangerous goods are given in Pt D, Ch 3, Sec 7

e) vessels equipped with helicopter facilities are to comply with other applicable Rules of the Society.

1.3.2 Vessels assigned additional class notation **Fire** are also to comply with the requirements of Pt D, Ch 2, Sec 7.

1.4 Documentation to be submitted

1.4.1 The interested party is to submit to the Society the documents listed in Tab 1.

Table 1 : Documentation to be submitted

No	I/A **(1)**	Document
1	A	Means of escape and, where required, the relevant dimensioning.
2	A	Automatic fire detection systems
3	A	Fire pumps and fire main including pumps head and capacity, hydrant and hose locations
4	A	Arrangement of fixed gas fire-extinguishing systems **(2)**
5	A	Arrangement of sprinkler systems including the capacity and head of the pumps **(2)**
6	A	Electrical diagram of the fixed gas fire-extinguishing systems
7	A	Electrical diagram of the sprinkler systems
8	A	Electrical diagram of power control and position indication circuits for fire doors
9	I	General arrangement plan

(1) A : to be submitted for review
I : to be submitted for information.

(2) Plans are to be schematic and functional and to contain all information necessary for their correct interpretation and verification, such as:

- service pressures
- capacity and head of pumps and compressors, if any
- materials and dimensions of piping and associated fittings
- volumes of protected spaces, for gas and foam fire-extinguishing systems
- surface areas of protected zones for automatic sprinkler and pressure water-spraying, low expansion foam and powder fire-extinguishing systems
- capacity, in volume and/or in mass, of vessels or bottles containing the extinguishing media or propelling gases, for gas, automatic sprinkler, foam and powder fire-extinguishing systems
- type, number and location of nozzles of extinguishing media for gas, automatic sprinkler, pressure water-spraying, foam and powder fire-extinguishing systems.

All or part of the information may be provided, instead of on the above plans, in suitable operation manuals or in specifications of the systems.

Table 2 : Equivalent steel A class divisions without testing or approval

Classification	Product description
Class A-0 bulkhead	A steel bulkhead with a scantling not less than the minimum given below: • thickness of plating: 4 mm • stiffeners 60 x 60 x 5 mm spaced 600 mm apart or structural equivalence
Class A-0 deck	A steel deck with a scantling not less than the minimum given below: • thickness of plating: 4 mm • stiffeners 95 x 65 x 7 mm spaced 600 mm apart or structural equivalence

1.5 Type approved products

1.5.1 The following materials, equipment, systems or products in general used for fire protection are to be type approved by the Society, except for special cases for which the acceptance may be given for individual vessels on the basis of suitable documentation or ad hoc tests.

a) fire-resisting and fire-retarding divisions (bulkheads or decks) and associated doors

b) fire dampers

c) hoses

d) water spray nozzles

e) discharge nozzles

f) fixed gas fire extinguishing systems (performance of the extinguishing agent with specific nozzle type)

g) portable fire extinguishers

h) detection and alarm system.

Exceptions to these Rules compatible with the statutory Regulations of the vessel's country of registration may be agreed with the Society.

The Society may request type approval for other materials, equipment, systems or products required by the applicable provisions for vessels or installations of special types.

2 Definitions

2.1 Accommodation spaces

2.1.1 Accommodation is a space intended for the use of persons normally living on board, including galleys, storage space for provisions, toilets and washing facilities, laundry facilities, ante-rooms and passageways, but not the wheelhouse.

2.2 A class divisions

2.2.1 "A" class divisions are those divisions formed by bulkheads and decks which comply with the following criteria:

a) they are constructed of steel or other equivalent material

b) they are suitably stiffened

c) they are insulated with approved non-combustible materials such that the average temperature of the unexposed side will not rise more than 140°C above the original temperature, nor will the temperature, at any one point, including any joint, rise more than 180°C above the original temperature, within the time listed below:

- class "A-60" ..... 60 minutes
- class "A-30" ..... 30 minutes
- class "A-15" ..... 15 minutes
- class "A-0" ..... 0 minutes

d) they are so constructed as to be capable of preventing the passage of smoke and flame to the end of the one-hour standard fire test; and

e) the Society required a test of a prototype bulkhead or deck in accordance with the Fire Test Procedures Code (see [2.6]) to ensure that it meets the above requirements for integrity and temperature rise.

2.2.2 The products indicated in Tab 2 may be installed without testing or approval.

2.3 B class divisions

2.3.1 "B" class divisions are those divisions formed by bulkheads, decks, ceilings or linings which comply with the following criteria:

a) they are constructed of approved non-combustible materials and all materials used in the construction and erection of "B" class divisions are non-combustible, with the exception that surface materials may have low flame spread characteristics

b) they have an insulation value such that the average temperature of the unexposed side will not rise more than 140°C above the original temperature, nor will the temperature at any one point, including any joint, rise more than 225°C above the original temperature, within the time listed below:

- class "B-15" ..... 15 minutes
- class "B-0" ..... 0 minutes

c) they are so constructed as to be capable of preventing the passage of flame to the end of the first half hour of the standard fire test; and

d) the Society required a test of a prototype division in accordance with the Fire Test Procedures Code (see [2.6]) to ensure that it meets the above requirements for integrity and temperature rise.

2.3.2 In order to be defined as B class, a metal division is to have plating thickness not less than 2 mm when constructed of steel.

2.4 Fire divisions other than steel

2.4.1 Attention is drawn to the use of composite and/or plywood materials from the point of view of structural fire protection. Regulations of the country where the vessel is registered may entail in some cases a limitation in the use of composite and/or plywood materials.

2.4.2 Insulation is to be such that the temperature of the structural core does not rise above the point at which the structure would begin to lose its strength at any time during the exposure to the standard fire test (60 minutes for A-class equivalence, 30 minutes for B-class equivalence).

a) Aluminium alloy structures

The insulation is to be such that the temperature of the structural core does not rise more than 200°C above the ambient temperature at any time during the applicable fire exposure.

b) Composite structures

The insulation is to be such that the temperature of the laminate does not rise more than the minimum temperature of deflection under load (HDT) of the resin at any time during the applicable fire exposure. The temperature of deflection under load is to be determined in accordance with a recognized international standard (as for example ISO 75-2004).

Note 1: Alternatively, the temperature of deflection under load of the complete composite structure, if available, may be taken as a criterion in lieu of the temperature of deflection under load of the resin.

c) Wood structures

Wood structures are to be given special consideration from the Society. As a principle, the insulation is to be such that the temperature of the structural core does not rise more than the minimum temperature of deflection under load of the wood at any time during the applicable fire exposure.

2.4.3 Equivalent fire divisions without testing or approval

A fire-resisting bulkhead may be considered to be equivalent to A class without testing, if its composition is one of the following:

- an aluminium alloy plate minimum 5,5 mm thick insulated with 80 mm of non-combustible rock wool (minimal density: 96 kg/m^3; welded bi-metallic pins spacing: maximum 300 mm): equivalent to A-30, A-15 and A-0 class
- a composite structure insulated with 120 mm of non-combustible rock wool (minimal density: 96 kg/m^3; pins spacing: maximum 300 mm): equivalent to A-30, A-15 and A-0 class.

A fire-resisting bulkhead may be considered to be equivalent to B class without testing, if its composition is one of the following:

- an aluminium alloy plate with 50 mm of non-combustible rock wool (minimal density: 96 kg/m^3): equivalent to B-15 and B-0 class
- a composite structure insulated with 75 mm of non-combustible rock wool (minimal density: 96 kg/m^3; pins spacing: maximum 300 mm): equivalent to B-15 and B-0 class.

2.5 Control centre

2.5.1 Control centre is a wheelhouse or an area with a centre permanently occupied by on-board personnel or crew members containing items such as vessel's radio equipment, centralised fire alarm equipment, centralised emergency public address system stations, remote controls of doors or fire dampers, etc.

2.6 Fire Test Procedures Code

2.6.1 Fire Test Procedures Code means the "International Code for Application of Fire Test Procedures", as adopted by the Maritime Safety Committee of the IMO by Resolution MSC.307 (88), as may be amended by the IMO.

2.7 Galleys

2.7.1 Galley is a room with stove or a similar cooking appliance.

2.8 Lounge

2.8.1 Lounge is a room of an accommodation or a passenger area. On board passenger vessels, galleys are not regarded as lounges.

2.9 Low flame-spread

2.9.1 A low flame-spread means that the surface thus described will adequately restrict the spread of flame, this being determined in accordance with the Fire Test Procedures Code.

2.9.2 Non-combustible materials are considered as low flame spread. However, due consideration will be given by the Society to the method of application and fixing.

2.10 Machinery spaces of category A

2.10.1 Machinery spaces of category A are defined in Ch 1, Sec 1, [1.4].

2.11 Machinery spaces

2.11.1 Machinery spaces are defined in Ch 1, Sec 1, [1.5].

2.12 Main fire zones

2.12.1 Main fire zones are those sections into which the hull, superstructures and deckhouses are divided by divisions of adequate fire integrity:

- the mean length and width of which on any deck does not, in general, exceed 40 m, or
- the area of which on any deck does not exceed 800 m^2.

2.13 Muster areas

2.13.1 Muster areas are areas of the vessel which are specially protected and in which persons muster in the event of danger.

2.14 Non-combustible material

2.14.1 Non-combustible material is a material which neither burns nor gives off flammable vapours in sufficient quantity for self-ignition when heated to approximately 750°C, this being determined in accordance with the Fire Test Procedures Code. Any other material is a combustible material.

2.14.2 In general, products made only of glass, concrete, ceramic products, natural stone, masonry units, common metals and metal alloys are considered as being non-combustible and may be installed without testing and approval.

2.15 Not readily ignitable material

2.15.1 Not readily ignitable material is a material having approved characteristics of ignitability. These characteristics are to be determined in accordance with a test procedure deemed acceptable by the society.

2.16 Passenger areas

2.16.1 Passenger areas are areas on board intended for passengers and enclosed areas such as lounges, offices, shops, hairdressing salons, drying rooms, laundries, saunas, toilets, wash rooms, passageways, connecting passages and stairs not encapsulated by walls.

2.17 Steel or other equivalent material

2.17.1 Steel or other equivalent material means any non-combustible material which, by itself or due to insulation provided, has structural and integrity properties equivalent to steel at the end of the applicable exposure to the standard fire test (e.g., aluminium alloy with appropriate insulation).

2.18 Service spaces

2.18.1 Service spaces are those spaces used for galleys, pantries containing cooking appliances, lockers, mail and specie rooms, store-rooms, workshops other than those forming part of the machinery spaces, and similar spaces and trunks to such spaces.

2.19 Stairwell

2.19.1 Stairwell is the well of an internal staircase or of a lift.

2.20 Standard fire test

2.20.1 A standard fire test is a test in which specimens of the relevant bulkheads or decks are exposed in a test furnace to temperatures corresponding approximately to the standard time-temperature curve in accordance with the test method specified in the Fire Test Procedures Code (see [2.6]).

2.21 Store room

2.21.1 Store room is a room for the storage of flammable liquids or a room with an area of over 4 m^2 for storing supplies.

SECTION 2 PREVENTION OF FIRE

1 Probability of ignition

1.1 Arrangements for fuel oil, lubrication oil and other flammable oils

1.1.1 Limitation in the use of oils as fuel

See Ch 1, Sec 1, [2.9].

1.1.2 Arrangements for fuel oil

For arrangement of fuel oil, see:

- Ch 1, Sec 10, [5].
- Ch 1, Sec 10, [11].

1.1.3 Arrangements for lubricating oil

For arrangement of lubricating oil, see:

- Ch 1, Sec 10, [5].
- Ch 1, Sec 10, [12].

1.1.4 Arrangements for other flammable oils

See Ch 1, Sec 10.

1.2 Arrangements for gaseous fuel for domestic purposes

1.2.1 Where gaseous fuel is used for domestic purposes the arrangements for the storage, distribution and utilisation of the fuel shall be such that, having regard to the hazards of fire and explosion which the use of such fuel may entail, the safety of the vessel and the persons on board is preserved.

See also Ch 1, Sec 13.

1.2.2 Gaseous fuel systems may only be considered for cargo vessels.

1.2.3 Storage of the gas bottles is to be located on the open deck or in a well ventilated space which opens only to the open deck.

1.3 Installation of boilers

1.3.1 Auxiliary and domestic boilers are to be arranged in such a way that other equipment is not endangered, even in the event of overheating. They must, in particular, be placed as far away as possible from fuel tanks, lubricating oil tanks and hold bulkheads. Oiltight trays are to be located below oil-fired boilers.

1.4 Insulation of hot surfaces

1.4.1 See Ch 1, Sec 1, [3.7].

1.5 Protective measures against explosion

1.5.1 For protective measures against explosion, see Ch 2, Sec 2, [5.2]

1.6 Miscellaneous items of ignition sources and ignitability

1.6.1 Electric heating appliances

No hooks or other devices on which clothing can be hung may be fitted above heaters without temperature limitation.

Where heaters are fitted in the bulkhead lining, a trough made of non-combustible material shall be mounted behind each heater in such a way as to prevent the accumulation of heat behind the lining.

1.6.2 Waste receptacles

In principle, all waste receptacles shall be constructed of non-combustible materials with no openings in the sides or bottom.

1.6.3 Insulation of surfaces against oil penetration

In spaces where penetration of oil products is possible, the surface of insulation shall be impervious to oil or oil vapours.

2 Fire growth potential

2.1 Control of flammable liquid supply

2.1.1 Fuel pumps, thermal oil pumps, fan motors and boiler fans are to be equipped with emergency stops. The outlet valves of fuel service tanks must be fitted with remotely operated shutoff devices. Emergency stops and remotely operated shutoff devices must be capable of being operated from permanently accessible open deck and protected from unauthorized use.

2.2 Control of air supply

2.2.1 Means must be provided for the airtight sealing of boiler, engine and pump rooms. The air ducts to these spaces are to be fitted with closing appliances or equivalent devices made of non-combustible material which can be closed from the deck. Engine room skylights must also be able to be closed from outside.

2.3 Fire protection materials

2.3.1 Use of non-combustible materials

Insulating materials shall be non-combustible, except in cargo spaces and refrigerated compartments of service spaces. Vapour barriers and adhesives used in conjunction with insulation, as well as insulation of pipe fittings for cold service systems, need not be of non-combustible materials, but they shall be kept to the minimum quantity practicable and their exposed surfaces shall have low flame-spread characteristics.

Cold service means refrigeration systems and chilled water piping for air conditioning systems.

3 Smoke generation potential and toxicity

3.1 Paints, varnishes and other finishes

3.1.1 Paints, varnishes and other finishes used on exposed interior surfaces shall not be capable of producing excessive quantities of smoke and toxic products, this being determined in accordance with the Fire Test Procedures Code.

3.1.2 Requirement [3.1.1] only applies to accommodation spaces, service spaces and control stations as well as stairway enclosures.

SECTION 3 DETECTION AND ALARM

1 General

1.1 Minimum number of detectors

1.1.1 Where a fixed fire detection and fire alarm system is required for the protection of spaces, at least one detector complying with the requirements given in [1.3] shall be installed in each such space.

1.2 Initial and periodical tests

1.2.1 The function of fixed fire detection and fire alarm systems required by the relevant Sections of this Chapter shall be tested under varying conditions of ventilation after installation.

1.2.2 The function of fixed fire detection and fire alarm systems shall be periodically tested to the satisfaction of the Society by means of equipment producing hot air at the appropriate temperature, or smoke or aerosol particles having the appropriate range of density or particle size, or other phenomena associated with incipient fires to which the detector is designed to respond.

1.3 Detector requirements

1.3.1 Detectors shall be operated by heat, smoke or other products of combustion, flame, or any combination of these factors. Detectors operated by other factors indicative of incipient fires may be considered by the Society provided that they are no less sensitive than such detectors. Flame detectors shall only be used in addition to smoke or heat detectors.

1.3.2 Smoke detectors required in all stairways, corridors and escape routes within accommodation spaces shall be certified to operate before the smoke density exceeds 12,5% obscuration per metre, but not until the smoke density exceeds 2% obscuration per metre. Smoke detectors to be installed in other spaces shall operate within sensitivity limits to the satisfaction of the Society having regard to the avoidance of detector insensitivity or oversensitivity.

1.3.3 Heat detectors shall be certified to operate before the temperature exceeds 78°C but not until the temperature exceeds 54°C, when the temperature is raised to those limits at a rate less than 1°C per minute. At higher rates of temperature rise, the heat detector shall operate within temperature limits to the satisfaction of the Society having regard to the avoidance of detector insensitivity or oversensitivity.

1.3.4 At the discretion of the Society, the permissible temperature of operation of heat detectors may be increased to 30°C above the maximum temperature in the upper part of engine and boiler rooms.

1.3.5 All detectors shall be of a type such that they can be tested for correct operation and restored to normal surveillance without the renewal of any component.

1.4 System control requirements

1.4.1 The detection system shall initiate audible and visual alarms distinct in both respects from the alarms of any other system not indicating fire, in the wheelhouse, the accommodation and the space to be protected.

2 Protection of machinery spaces

2.1 Installation

2.1.1 A fixed fire detection and fire alarm system shall be installed in any machinery space:

a) which is periodically unattended,

b) where the installation of automatic and remote control systems and equipment has been approved in lieu of continuous manning of the space, or

c) where the main propulsion and associated machinery including sources of main melectrical supply is provided with various degrees of automatic or remote control and is under continuous manned supervision from a control room.

For fire detecting system for unattended machinery spaces, see also Pt D, Ch 2, Sec 8, [3.2].

2.2 Design

2.2.1 The fire detection system required in [2.1] shall be so designed and the detectors so positioned as to detect rapidly the onset of fire in any part of those spaces and under any normal conditions of operation of the machinery and variations of ventilation as required by the possible range of ambient temperatures. Except in spaces of restricted height and where their use is specially appropriate, detection systems using only thermal detectors are not permitted.

3 Protection of accommodation and service spaces

3.1 Smoke detectors in stairways, corridors and escape route

3.1.1 Smoke detectors shall be installed in all stairways, corridors and escape routes within accommodation spaces. Consideration shall be given to the installation of special purpose smoke detectors within ventilation ducting.

3.1.2 Accommodation and service spaces of cargo vessels and tank vessels shall be protected by a fixed fire detection and fire alarm system and/or an automatic sprinkler, fire detection and fire alarm system, depending on a protection method adopted.

SECTION 4 FIRE FIGHTING

Symbols

L : Rule length, in m, defined in Pt B, Ch 1, Sec 2, [2.1]

B : Breadth, in m, defined in Pt B, Ch 1, Sec 2, [2.2]

D : Depth, in m, defined in Pt B, Ch 1, Sec 2, [2.3].

1 Water supply systems

1.1 General

1.1.1 Vessels shall be provided with fire pumps, fire mains, hydrants and hoses complying with the applicable requirements of this Article.

1.1.2 Additional requirements for passenger vessels are given in Pt D, Ch 1, Sec 6, [3.7].

1.1.3 The Society may waive the requirements of this Article for non-propelled vessels not intended to carry passengers wether:

- the vessel is part of a specified pushed convoy or side-by-side formation and the fire-fighting system of the propulsion vessel is determined in compliance with the requirements of this Article considering the pushed convoy or side-by-side formation as a single vessel, or
- the vessel is fitted with suitable piping systems connectable to the fire-fighting system of the propulsion vessel.

1.2 Fire mains and hydrants

1.2.1 General

Materials readily rendered ineffective by heat shall not be used for fire mains and hydrants unless adequately protected. The pipes and hydrants shall be so placed that the fire hoses may be easily coupled to them. The arrangement of pipes and hydrants shall be such as to avoid the possibility of freezing. Suitable drainage provisions shall be provided for fire main piping. Isolation valves shall be installed for all open deck fire main branches used for purposes other than fire-fighting.

Fire mains are to be so arranged that a water jet can at all times be projected to any part of the vessel through a single length of hose not exceeding 20 m.

Deck-washing lines may be incorporated in the fire extinguishing system.

1.2.2 Number of hydrants

At least three hydrants are to be provided.

For vessels less than 40 m in length, at least two hydrants are to be provided.

1.3 Fire pumps

1.3.1 Pumps accepted as fire pumps

Combined ballast pumps, bilge pumps or other pumps exclusively pumping water may be accepted as fire pumps and shall be connected to the fire main by means of a non return valve.

1.3.2 Capacity of fire pumps

Self-propelled vessels are to be equipped with a power-driven pump suitable for use as a fire pump.

The capacity of the fire pump, acting through fire mains and hoses, must be sufficient to project at least one jet of water to any part of the vessel. This is to be based on a length of throw of 12 m from a 12 mm diameter nozzle.

The minimum pump capacity must be 10 m^3/h.

The pump must have a drive independent of the main propulsion unit. On vessels with a gross volume (L·B·D) of up to 800 m^3 or with a propulsive power of up to 350 kW, a bilge pump or cooling water pump coupled to the main engine may also be used provided that the propeller shafting can be disengaged.

Fire pumps are to be located aft of the forward collision bulkhead.

Outboard connections for fire pumps are to be located as deep as possible. Pump suction must be safeguarded even in lightship condition.

1.4 Fire hoses and nozzles

1.4.1 Hoses must be able to be connected to the fire mains via fire hydrants and quick couplings.

At least two hoses with dual purpose nozzles are to be provided. These are to be stowed in hose boxes placed close to the hydrants.

Hose boxes are to be properly marked. Hose wrenches are to be provided in every hose box.

1.5 Non propelled vessels

1.5.1 Where a water fire extinguishing system is provided on a non propelled vessel, the requirements set out in [1.2] and [1.3] are to be applied as appropriate.

2 Portable fire extinguishers

2.1 Extinguishing media and weights of charge

2.1.1 Fire extinguishers must have been type approved, or approved by Authorities.

2.1.2 The weight of the charge in dry powder extinguishers should be at least 6 kg.

2.1.3 In the case of water, foam and carbon dioxide extinguishers, the charge shall provide a fire extinguishing capability at least equivalent to that of a 6 kg dry powder extinguisher as required in [2.1.2].

2.1.4 The maximum weight of a portable fire extinguisher ready for use shall not exceed 20 kg.

2.1.5 The extinguishing agent must be suitable at least for the class of fire most likely to occur in the space (or spaces) for which the fire extinguisher is intended. See Tab 1.

Table 1 : Classification of extinguishing media

Fire class	Fire hazard	Extinguishing media
A	Solid combustible materials of organic nature (e.g. wood, coal, fibre materials)	Water, dry powder, foam
B	Flammable liquids (e.g. oils, tars, petrol)	Dry powder, foam, carbon dioxide
C	Gases (e.g. acetylene, propane)	Dry powder, carbon dioxide
D	Metals (e.g. aluminium, magnesium, sodium)	Special dry powder

2.1.6 On vessels with electrical installations having an operating voltage greater than 50 V, the extinguishing agent must also be suitable for fighting fire in electrical equipment.

2.1.7 On motor vessels and vessels with oil-fired equipment, engine rooms and accommodation spaces are to be provided with dry powder extinguishers covering class A, class B and class C fires.

2.1.8 As extinguishing agent, fire extinguishers may contain neither CO_2 nor agents capable of emitting toxic gases in use.

2.1.9 Nevertheless, CO_2 extinguishers may be used for galleys and electrical installations.

2.1.10 Fire extinguishers with charges which are sensitive to frost or heat are to be mounted or protected in such a way that their effectiveness is guaranteed at all times.

2.1.11 Where fire extinguishers are mounted under cover, the covering must be properly marked.

2.2 Arrangement of fire extinguishers

2.2.1 Portable fire extinguishers of appropriate types are to be provided as follows.

One portable fire extinguisher is to be provided:

- in the wheelhouse
- close to each entrance from the deck to accommodation areas
- close to each entrance to spaces which are not accessible from the accommodation area and which contain heating, cooking or cooling equipment operated with solid or liquid fuels or with liquefied gas
- at each entrance to engine rooms
- at each entrance to spaces in which oil-fired auxiliary boilers or heating boilers are installed
- at each entrance to spaces in which materials presenting a fire hazard are stored
- at suitable points below deck in engine rooms and boiler rooms such that no position in the space is more than 10 metres walking distance away from an extinguisher.

3 Automatic pressure water spraying system (sprinkler system)

3.1 General

3.1.1 Where fitted, automatic pressure water spraying system shall comply with the provisions of this Article.

Alternative systems complying with recognized standards may, subject to review or type approval, be accepted.

3.2 Pressure water tanks

3.2.1 Pressure water tanks are to be fitted with a safety valve, connected directly without valves to the water compartment, with a water level indicator that can be shut off and is protected against damage, and with a pressure gauge. Furthermore, Ch 1, Sec 3 is to be applied.

3.2.2 The volume of the pressure water tank shall be equivalent to at least twice the specified pump delivery per minute.

3.2.3 The tank shall contain a standing charge of fresh water equivalent to at least the specified volume delivered by the pump in one minute.

3.2.4 The tank is to be fitted with a connection to enable the entire system to be refilled with fresh water.

3.2.5 The pressure water tank is to be installed in a frost-proof space.

3.2.6 Means are to be provided for replenishing the air cushion in the pressure water tank.

3.2.7 Other means can be used to meet the functional requirements stipulated in [3.2.2] and [3.2.6].

3.3 Pressure water spraying pumps

3.3.1 The pressure pumps may only be used for supplying water to the pressure water-spraying systems.

3.3.2 In the event of a pressure drop in the system, the pump shall start up automatically before the fresh water charge in the pressure water tank has been exhausted. Suitable means of testing are to be provided.

3.3.3 The system shall be able to spray water at a rate of at least 5 l/m^2 per minute over an area of at least 75 m^2.

For large rooms to be protected, one of the following provisions shall be complied with, depending on the fire risk encountered, at the Society's discretion:

- the rooms to be protected will be considered without sprinkler installation for determining the appropriate fire integrity standards to be applied to boundaries
- the sprinkler pump capacity will be determined on the basis of a minimum water rate of 5 l/m^2 per minute, considering the area of the largest room, limited to 280 m^2.

3.3.4 The pump is to be provided with a direct suction connection at the vessel's side. The shutoff device is to be secured in the open position. A suitable raw water filter is to be fitted, the mesh size of which is able to prevent coarse impurities from clogging the nozzles. The pump delivery is to be fitted with a test valve with connecting pipes, the cross-section of which is compatible with the pump capacity at the prescribed head.

3.4 Location

3.4.1 Pressure water tanks and pressure water pumps are to be located outside, and at a sufficient distance from, the rooms to be protected.

3.5 Water supply

3.5.1 The system shall be completely charged with fresh water when not in operation.

3.5.2 In addition to the water supply to the spraying equipment located outside the spaces to be protected, the system is also to be connected to the fire main via a screw-down non-return valve.

3.5.3 The equipment must be kept permanently under pressure and must be ready at all times for immediate, automatic operation. With the test valve at the alarm valve in the fully open position, the pressure at the level of the highest spray nozzles shall still be at least 1,75 bar.

3.6 Power supply

3.6.1 At least two mutually independent power sources shall be provided for supplying the pump and the automatic indicating and alarm systems. Each source shall be sufficient to power the equipment.

3.7 Piping, valves and fittings

3.7.1 Lines between suction connection, pressure water tank, shore connection and alarm valve are to comply with the dimensional requirements set out in Ch 1, Sec 10, Tab 6. Lines shall be effectively protected against corrosion.

3.7.2 Check valves are to be fitted to ensure that raw water cannot penetrate into the pressure water tank nor water for fire extinguishing be discharged overboard through pump suction lines.

3.7.3 Hose connections are to be provided at suitable points on the port and starboard sides for supplying the equipment with water from the shore. The connecting valves are to be secured against being opened unintentionally.

3.7.4 Each line leading to a section of the system is to be equipped with an alarm valve (see also [3.9]).

3.7.5 Shutoff devices located between the pump delivery and the alarm valves are to be secured in the open position.

3.8 Spray nozzles

3.8.1 The system shall be divided into sections, each with no more than 50 spray nozzles.

A sprinkler section may extend only over one main fire zone or one watertight compartment and may not include more than two vertically adjacent decks.

3.8.2 The spray nozzles are to be so arranged in the upper deck area that a water volume of not less than 5 l/m^2 per minute is sprayed over the area to be protected.

3.8.3 Inside accommodation and service spaces the spray nozzles shall be activated within a temperature range from 68°C to 79°C. This does not apply to spaces such as drying rooms with higher temperatures. Here the triggering temperature may be up to 30°C above the maximum temperature in the deck head area.

3.8.4 The nozzles are to be made of corrosion-resistant material. Nozzles of galvanized steel are not allowed.

3.9 Indicating and alarm systems

3.9.1 Every spray nozzle section is to be equipped with an alarm valve which, when a nozzle is opened, actuates a visual and audible alarm at one or more suitable positions, at least one of which must be permanently manned. In addition, each alarm valve is to be fitted with a pressure gauge and a test valve with an inner diameter corresponding to a spray nozzle.

3.9.2 At the positions mentioned here above, an automatic indicating device is to be mounted which identifies the actuated sprinkler section.

3.9.3 The electrical installation must be self-monitoring and must be capable of being tested separately for each section.

4 Fixed fire extinguishing systems

4.1 Extinguishing agents

4.1.1 For protection of machinery spaces, the following extinguishing agents may be used in permanently installed fire-fighting systems:

a) CO_2 (carbon dioxide)

b) HFC 227 ea (heptafluoropropane)

c) IG-541 (52% nitrogen, 40% argon, 8% carbon dioxide)

d) FK-5-1-12 (dodecafluoro-2-methylpentan-3-one).

e) water (in the form of water mist)

f) K_2CO_3 (Potassium carbonate)

4.1.2 Other extinguishing agents are permitted only if agreed by the Society.

If other extinguishing agents will be permitted, these fixed fire-extinguishing systems are to be type approved by the Society as well.

4.1.3 The fixed fire-extinguishing systems according to [4.1.1] items b) to d) shall be type approved by the Society.

4.2 Ventilation, air intake

4.2.1 Combustion air for the propulsion engines shall not be extracted from rooms that are to be protected by permanently installed fire-fighting systems. This shall not apply where there are two mutually independent and hermetically separated main engine rooms or if next to the main engine room there is a separate engine room with a bow thruster, ensuring that the vessel is able to make way under its own power in the event of fire in the main engine room.

4.2.2 Any forced ventilation present in the room to be protected shall switch off automatically if the fire-fighting system is triggered.

4.2.3 There shall be devices available with which all apertures which can allow air to enter or gas to escape from the room to be protected can be quickly closed. It shall be clearly recognisable whether they are open or closed.

4.2.4 The air escaping from relief valves in the compressed-air tanks installed in engine rooms shall be conveyed to the open air.

4.2.5 Over- or underpressure resulting from the inflow of extinguishing agent shall not destroy the components of the surrounding partitions of the room to be protected. It shall be possible for the pressure to equalise without danger.

4.2.6 Protected rooms shall have a facility for extracting the extinguishing agent and the combustion gases. Such facilities shall be capable of being operated from positions outside the protected rooms and which would not be made inaccessible by a fire within such spaces. If there are permanently installed extractors, it shall not be possible for these to be switched on while the fire is being extinguished.

4.3 Fire alarm system

4.3.1 The room to be protected shall be monitored by means of an appropriate fire alarm system. The alarm shall be noticeable in the wheelhouse, the accommodation spaces and the room to be protected.

4.4 Piping system

4.4.1 The extinguishing agent shall be routed to and distributed in the space to be protected by means of a permanent piping system. Piping installed in the space to be protected and the reinforcements it incorporates shall be made of steel. This shall not apply to the connecting nozzles of tanks and compensators provided that the materials used are fire resistant. Piping shall be protected against corrosion both internally and externally.

4.4.2 The discharge nozzles shall be so arranged as to ensure the regular diffusion of the extinguishing agent. In particular, the extinguishing agent must also be effective beneath the floor.

4.4.3 The necessary pipes for conveying fire-extinguishing medium into protected spaces shall be provided with control valves so marked as to indicate clearly the space to which the pipes are led. Suitable provision shall be made to prevent inadvertent release of the medium into the space. Where a cargo space fitted with a gas fire-extinguishing system is used as a passenger space the gas connection shall be blanked during such use.

The pipelines may pass through accommodation spaces providing they are of substantial thickness and their tightness is verified with a pressure test, after installation, at a pressure head not less than 5 MPa. In addition, pipelines passing through accommodation spaces are to be joined only by welding and are not to be fitted with drains or other openings within such spaces. The pipelines are not to pass through refrigerated spaces.

4.5 Triggering device

4.5.1 Automatically activated fire-extinguishing systems are not permitted.

4.5.2 It shall be possible to activate the fire-extinguishing system from outside the space to be protected.

4.5.3 Triggering devices shall be so installed that they can be activated in the event of a fire and so that the risk of their breakdown in the event of a fire or an explosion in the space to be protected is reduced as far as possible.

Systems which are not mechanically activated shall be supplied from two energy sources independent of each other. These energy sources shall be located outside the space to be protected. The control lines located in the space to be protected shall be so designed as to remain capable of operating in the event of a fire for a minimum of 30 minutes. The electrical installations are deemed to meet this requirement if they conform to the IEC 60331-21:1999 standard.

When the triggering devices are so placed as not to be visible, the component concealing them shall carry the "Fire-fighting system" symbol, each side being not less than 10 cm in length, with the following text in red letters on a white ground:

FIRE-FIGHTING INSTALLATION

4.5.4 If the fire-extinguishing system is intended to protect several spaces, it shall comprise a separate and clearly marked triggering device for each space.

4.5.5 The instructions shall be posted alongside all triggering devices and shall be clearly visible and indelible. The instructions are to be at least in a language the master can read and understand and if this language is not English, French or German, they are to be at least in English, French or German in addition.

They shall include information concerning:

a) the activation of the fire-extinguishing system

b) the need to ensure that all persons have left the space to be protected

c) the correct behaviour of the crew in the event of activation or diffusion, in particular in respect of the possible presence of dangerous substances

d) the correct behaviour of the crew in the event of the failure of the fire-extinguishing system to function properly.

4.5.6 The instructions shall mention that prior to the activation of the fire-extinguishing system, combustion engines installed in the space and aspirating air from the space to be protected shall be shut down.

4.6 Alarm device

4.6.1 Permanently fixed fire-extinguishing systems shall be fitted with an audible and visual alarm device.

4.6.2 The alarm device shall be set off automatically as soon as the fire-extinguishing system is first activated. The alarm device shall function for an appropriate period of time before the extinguishing agent is released; it shall not be possible to turn it off.

4.6.3 Alarm signals shall be clearly visible in the spaces to be protected and their access points and be clearly audible under operating conditions corresponding to the highest possible sound level. It shall be possible to distinguish them clearly from all other sound and visual signals in the space to be protected.

4.6.4 Sound alarms shall also be clearly audible in adjoining spaces, with the communicating doors shut, and under operating conditions corresponding to the highest possible sound level.

4.6.5 If the alarm device is not intrinsically protected against short circuits, broken wires and drops in voltage, it shall be possible to monitor its operation.

4.6.6 A sign with the following text in red letters on a white ground shall be clearly posted at the entrance to any space the extinguishing agent may reach:

WARNING, FIRE-FIGHTING INSTALLATION !

LEAVE THE ROOM AS SOON AS THE
WARNING SIGNAL SOUNDS (description of the signal)

4.7 Pressurized tanks, fittings and piping

4.7.1 Pressurized tanks, fittings and piping shall conform to the requirements of the competent authority.

4.7.2 Pressurized tanks shall be installed in accordance with the manufacturer's instructions and in compliance with other applicable rules of the Society.

4.7.3 Pressurized tanks, fittings and piping shall not be installed in the accommodation.

4.7.4 The temperature of cabinets and storage spaces for pressurized tanks shall not exceed 50°C.

4.7.5 Cabinets or storage spaces on deck shall be securely stowed and shall have vents so placed that in the event of a pressurized tank not being gastight, the escaping gas cannot penetrate into the vessel. Direct connections with other spaces are not permitted.

4.8 Quantity of extinguishing agent

4.8.1 If the quantity of extinguishing agent is intended for more than one space, the quantity of extinguishing agent available does not need to be greater than the quantity required for the largest of the spaces thus protected.

4.9 Fire extinguishing system operating with CO_2

4.9.1 In addition to the requirements contained in [4.1] to [4.8], fire-extinguishing systems using CO_2 as an extinguishing agent shall conform to the provisions of [4.9.2] to [4.9.7].

4.9.2 Tanks of CO_2 shall be placed in a gastight space or cabinet separated from other spaces. The doors of such storage spaces and cabinets shall open outwards; they shall be capable of being locked and shall carry on the outside the symbol "Warning: general danger", not less than 5 cm high and "CO_2" in the same colour and the same size.

4.9.3 Storage cabinets or spaces for CO_2 tanks located below deck shall only be accessible from the outside. These spaces shall have a mechanical ventilation system with extractor hoods and shall be completely independent of the other ventilation systems on board.

4.9.4 The level of filling of CO_2 tanks shall not exceed 0,75 kg/l. The volume of depressurised CO_2 shall be taken to be 0,56 m^3/kg.

4.9.5 The concentration of CO_2 in the space to be protected shall be not less than 40% of the gross volume of the space. This quantity shall be released within 120 seconds. It shall be possible to monitor whether diffusion is proceeding correctly.

Where the volume of free air contained in air receivers in any space is such that, if released in such space in the event of fire, such release of air within that space would seriously affect the efficiency of the fixed fire-extinguishing system, the Society shall require the provision of an additional quantity of fire-extinguishing medium.

The volume of starting air receivers, converted to free air volume, shall be added to the gross volume of the machinery space when calculating the necessary quantity of extinguishing medium. Alternatively, a discharge pipe from the safety valves may be fitted and led directly to the open air.

4.9.6 The opening of the tank valves and the opening of the directional valve shall correspond to two different operations.

4.9.7 The appropriate period of time mentioned in [4.6] shall be not less than 20 seconds. A reliable installation shall ensure the timing of the diffusion of CO_2.

4.10 Fire extinguishing system operating with HFC-227 ea (heptafluoropropane)

4.10.1 In addition to the requirements of [4.1] to [4.8], fire extinguishing systems using HFC-227 ea as an extinguishing agent shall conform to the provisions of [4.10.2] to [4.10.9].

4.10.2 Where there are several spaces with different gross volumes, each space shall be equipped with its own fire extinguishing system.

4.10.3 Every tank containing HFC-227 ea placed in the space to be protected shall be fitted with a device to prevent overpressure. This device shall ensure that the contents of the tank are safely diffused in the space to be protected if the tank is subjected to fire, when the fire-extinguishing system has not been brought into service.

4.10.4 Every tank shall be fitted with a device permitting control of the gas pressure.

4.10.5 The level of filling of tanks shall not exceed 1,15 kg/l. The specific volume of unpressurized HFC-227 ea shall be taken to be 0,1374 m^3/kg.

4.10.6 The volume of HFC-227 ea in the space to be protected shall be not less than 8% of the gross volume of the space. This quantity shall be released within 10 seconds.

4.10.7 Tanks of HFC-227 ea shall be fitted with a pressure monitoring device which triggers an audible and visual alarm in the wheelhouse in the event of an unscheduled loss of propellant gas. Where there is no wheelhouse, the alarm shall be triggered outside the space to be protected.

4.10.8 After discharge, the concentration in the space to be protected shall not exceed 10,5% (volume).

4.10.9 The fire-extinguishing system shall not comprise aluminium parts.

4.11 Fire extinguishing system operating with IG-541

4.11.1 In addition to the requirements of [4.1] to [4.8], fire extinguishing systems using IG-541 as an extinguishing agent shall conform to the provisions of [4.11.2] to [4.11.6].

4.11.2 Where there are several spaces with different gross volumes, every space shall be equipped with its own fire-extinguishing system.

4.11.3 Every tank containing IG-541 placed in the space to be protected shall be fitted with a device to prevent overpressure. This device shall ensure that the contents of the tank are safely diffused in the space to be protected if the tank is subjected to fire, when the fire-extinguishing system has not been brought into service.

4.11.4 Each tank shall be fitted with a device for checking the contents.

4.11.5 The filling pressure of the tanks shall not exceed 200 bar at a temperature of +15°C.

4.11.6 The concentration of IG-541 in the space to be protected shall be not less than 44% and not more than 50% of the gross volume of the space. This quantity shall be released within 120 seconds.

4.12 Fire extinguishing system operating with FK-5-1-12

4.12.1 In addition to the requirements of [4.1] to [4.8], fire extinguishing systems using FK-5-1-12 as an extinguishing agent shall conform to the provisions [4.12.2] to [4.12.8].

4.12.2 Where there are several spaces with different gross volumes, each space shall be equipped with its own fire-extinguishing system.

4.12.3 Every tank containing FK-5-1-12 placed in the space to be protected shall be fitted with a device to prevent overpressure. This device shall insure that the contents of the tank are safely diffused in the space to be protected if the tank is subjected to fire, when the fire-extinguishing system has not been brought into service.

4.12.4 Every tank shall be fitted with a device permitting control of the gas pressure.

4.12.5 The level of filling of tanks shall not exceed 1,00 kg/l. The specific volume of depressurized FK-5-1-12 shall be taken to be 0,0719 m^3/kg.

4.12.6 The volume of FK-5-1-12 in the space to be protected shall be not less than 5,5% of the gross volume of the space. This quantity shall be released within 10 seconds.

4.12.7 Tanks of FK-5-1-12 shall be fitted with a pressure monitoring device which triggers an audible and visual alarm in the wheelhouse in the event of an unscheduled loss of propellant gas. Where there is no wheelhouse, the alarm shall be triggered outside the space to be protected.

4.12.8 After discharge, the concentration in the space to be protected shall not exceed 10,0% (volume).

4.13 Fire extinguishing system operating with water

4.13.1 In addition to the requirements of [4.1] to [4.8], fire extinguishing systems using water as an extinguishing agent shall conform to the provisions [4.13.2] to [4.13.11].

4.13.2 Fire-fighting systems using water as the extinguishing agent may only release this agent into the space to be protected in the form of a water mist. The droplet size must be between 5 and 300 microns.

4.13.3 The fire-fighting system shall be of type-approved pursuant to Resolution MSC/Circ. 1165 of the Maritime Safety Committee of the IMO or another Standard recognised by the Society.

4.13.4 The fire-fighting system must be sized according to the largest of the spaces to be protected and must be able to spray water continuously into the space for a minimum of 30 minutes.

4.13.5 The pumps, their switching mechanisms and the valves that are required in order for the system to operate should be installed in a space outside the spaces to be protected. The space in which they are installed should be separated from adjacent by at least type A30 partition walls.

4.13.6 The fire-fighting system must be completely full of water at all times at least as far as the trip valves and be under the required initial operating pressure. The water supply pumps must be automatically initiated when the system is triggered. The system must feature a continuously operating water supply. Measures must be taken to ensure impurities do not affect system operation.

4.13.7 The capacity and design of the system's pipe network must be based on an hydraulic calculation.

4.13.8 The number and arrangement of nozzles must ensure sufficient distribution of water in the spaces to be protected. The spray nozzles must be located so as to ensure that the water mist is distributed throughout the space to be protected, especially in those areas where there is a higher risk of fire, including behind the fittings and beneath the floor.

4.13.9 The fire-fighting system's electrical components in the space to be protected must at a minimum comply with protection class IP54. The system shall feature two independent energy sources with automatic switching. One of the power sources must be located outside the space to be protected. Each power source should on its own be capable of ensuring the operation of the system.

4.13.10 The fire-fighting system must be fitted with redundant pumps.

4.13.11 The fire-fighting system must be equipped with a monitoring device which triggers an alarm signal in the wheelhouse in the following cases:

- drop in water tank level (if fitted),
- power supply failure,
- loss of pressure in the low pressure system pipework,
- loss of pressure in the high pressure circuit,
- when the system is activated.

4.14 Fire extinguishing system operating with K_2CO_3

4.14.1 In addition to the requirements of [4.1] to [4.8], fire extinguishing systems using K_2CO_3 as an extinguishing agent shall conform to the provisions [4.14.2] to [4.14.6].

4.14.2 The fire-fighting system shall be of type-approved pursuant to Resolution MSC/Circ. 1270 of the Maritime Safety Committee of the IMO or another Standard recognised by the Society.

4.14.3 Each space shall be provided with its own fire-fighting system.

4.14.4 The extinguishing agent must be stored in specially provided unpressurised tanks in the space to be protected. These tanks must be fitted in such a way that the extinguishing agent is dispensed evenly in the space. In particular the extinguishing agent must also work underneath the deck plates.

4.14.5 Each tank must be separately connected with the trigger device.

4.14.6 The quantity of extinguishing agent relative to the space to be protected is to be at least 120 g per m^3 of the net volume of this space. This net volume is calculated according to Resolution MSC/Circ. 1270 of the Maritime Safety Committee of the IMO. It shall be possible to supply the extinguishing agent within 120 seconds.

SECTION 5 ESCAPE

1 General

1.1

1.1.1 Unless expressly provided otherwise in this Section, at least two widely separated and ready means of escape shall be provided from all spaces or groups of spaces.

1.1.2 Lifts shall not be considered as forming one of the means of escape as required by this Section.

1.1.3 The escape trunk shall have clear dimensions of at least 0,6 x 0,6 m.

2 Means of escape from control centres, accommodation spaces and service spaces

2.1 General requirements

2.1.1 Stairways and ladders shall be so arranged as to provide ready means of escape from accommodation spaces and from spaces in which the crew is normally employed, other than machinery spaces.

2.1.2 All stairways in accommodation and service spaces and control stations shall be of steel frame construction except where the Society sanctions the use of other equivalent material.

2.1.3 Doors in escape routes shall, in general, open in way of the direction of escape, except that:

a) individual cabin doors may open into the cabins in order to avoid injury to persons in the corridor when the door is opened, and

b) doors in vertical emergency escape trunks may open out of the trunk in order to permit the trunk to be used both for escape and for access.

2.2 Escape arrangements

2.2.1 Below the lowest open deck the main means of escape shall be a stairway and the second escape may be a trunk or a stairway.

2.2.2 Above the lowest open deck the means of escape shall be stairways or doors to an open deck or a combination thereof.

2.2.3 Exceptionally the Society may dispense with one of the means of escape, for crew spaces that are entered only occasionally, if the required escape route is independent of watertight doors.

3 Means of escape from machinery spaces

3.1 Escape arrangements

3.1.1 Means of escape from each machinery space shall comply with the provisions of [3.1.2] and [3.1.3].

3.1.2 Every engine room and boiler room (machinery space of category A) shall be provided with two means of escape as widely separated as possible. One of the means of escape shall be an emergency exit. If a skylight is permitted as an escape, it must be possible to open it from the inside.

3.1.3 In case of engine rooms and boiler rooms (machinery space of category A) of less than 35 m^2 one means of escape may be accepted.

BUREAU
VERITAS

Shaping a World of Trust

Marine & Offshore
Le Triangle de l'Arche - 8 Cours du Triangle - CS 50101
92937 Paris La Defense Cedex - France
Tel: + 33 (0)1 55 24 70 00
https://marine-offshore.bureauveritas.com/bv-rules
© 2021 Bureau Veritas – All rights reserved