NR445 DT JANUARY 2024

RULES FOR THE CLASSIFICATION OF OFFSHORE UNITS

NR445 - JANUARY 2024

CONSOLIDATED JANUARY 2024 EDITION
PARTS A - B - C - D

OFFSHORE UNITS

BUREAU VERITAS

BUREAU VERITAS
RULES FOR THE CLASSIFICATION OF OFFSHORE UNITS

NR445 - JANUARY 2024

This document contains the consolidated January 2024 edition, Part A to Part D.

This document is for documentation only.

The PDF electronic version of this document available on the Bureau Veritas Marine & Offshore website https://marine-offshore.bureauveritas.com/ is the official version and shall prevail if there are any inconsistencies between the PDF version and any other available version.

These rules are provided within the scope of the Bureau Veritas Marine & Offshore General Conditions, enclosed at the end of Part A of NR467, Rules for the Classification of Steel Ships. The latest version of these General Conditions is available on the Bureau Veritas Marine & Offshore website.

BUREAU VERITAS MARINE & OFFSHORE

Tour Alto
4 place des Saisons
92400 Courbevoie - France
+33 (0)1 55 24 70 00

marine-offshore.bureauveritas.com/rules-guidelines

NR445

RULES FOR THE CLASSIFICATION OF OFFSHORE UNITS

Part A
Classification and Surveys

January 2024

Table of Content

Chapter 1 Classification

Section 1 General Principles of Classification

Section 2 Classification Notations

Table of Content

Table of Content

Part A
Classification and Surveys

CHAPTER 1
CLASSIFICATION

Section 1 General Principles of Classification

1 Principles of classification

1.1 Purpose of the Rules

1.1.1 The present Rules give the requirements for the assignment and the maintenance of classification for offshore units.

Note 1: The general conditions of classification are laid down in the Marine & Offshore Division General Conditions.

1.1.2 The application criteria of the different parts of the present Rules are the following:

- Part A - Classification Surveys, which applies to all units
- Part B - Structural Safety, Part C - Facilities, Part D - Service Notations, which apply to offshore units of welded steel construction. Where necessary, the extent of application is more precisely defined in each chapter of these parts.

The classification of units other than those dealt with in the above-mentioned Part B, Part C and Part D is covered by specific Rules published by the Society.

1.2 General definitions

1.2.1 The following general definitions are used in these Rules:

- Society means the Classification Society with which the unit is classed.
- Rules means the present Rules for the Classification of Offshore Units and documents issued by the Society serving the same purpose.
- Ship Rules means the NR467, Rules for the Classification of Steel Ships.
- Surveyor means the technical staff acting on behalf of the Society to perform tasks in relation to classification and survey duties.
- Survey means an intervention by the Surveyor for assignment or maintenance of class, or interventions by the Surveyor within the limits of the tasks delegated by the Administrations.
- Administration means the Government of the State whose flag the unit is entitled to fly or the State under whose authority the unit is operating in the specific case.
- Interested Party means a party, other than the Society, having responsibility for the classification of the unit, such as the Owners of a unit and his representatives, or the Shipbuilder, or the Engine Builder, or the Supplier of parts to be tested.
- Owner means the Registered Owner or the Disponent Owner or the Manager or any other party having the responsibility to keep the unit seaworthy, having particular regard to the provisions relating to the maintenance of class laid down in Part A, Chapter 2.
- Approval means the review by the Society of documents, procedures or other items related to classification, verifying solely their compliance with the relevant Rules requirements, or other referentials where requested.
- Type approval means an approval process for verifying compliance with the Rules of a product, a group of products or a system, and considered by the Society as representative of continuous production.
- Essential services mean services necessary for a unit to operate at site, be steered or manoeuvred, or undertake activities connected with its operation, and for the safety of life, as far as class is concerned.
- Gross tonnage (GT) is the measure of the overall size of a unit as determined in accordance with the provisions of the 1969 International Convention on Tonnage Measurement of Ships. It is expressed as a figure without units.

1.2.2 Date of “contract for construction”

The date of “contract for construction” of a unit is the date on which the contract to build the unit is signed between the Owner and the Shipbuilder. This date is normally to be declared to the Society by the Interested Party applying for the assignment of class to a new unit.

1.3 Meaning of classification, scope and limits

1.3.1 Classification process

The classification process consists of:

- the development of Rules, guidance notes and other documents relevant to the structure, material, equipment, machinery and other items covered by such documents
- the review of plans and calculations and the surveys, checks and tests intended to demonstrate that the unit meets the Rules (refer to Ch 1, Sec 3)
- the assignment of class (see Ch 1, Sec 2) and issue of a Certificate of Classification, where compliance with the above Rules is found
- the periodical, occasional and class renewal surveys performed to record that the unit in service meets the conditions for maintenance of class (see Part A, Chapter 2).

1.3.2 Other parties

The Rules, surveys performed, reports, certificates and other documents issued by the Society, are in no way intended to replace or alleviate the duties and responsibilities of other parties such as Administrations, Designers, Shipbuilders, Manufacturers, Repairers, Suppliers, Contractors or Sub-contractors, actual or prospective Owners or Operators, Charterers, Brokers, Cargo-owners and Underwriters.

The activities of such parties which fall outside the scope of the classification as set out in the Rules, such as design, engineering, manufacturing, operating alternatives, choice of type and power of machinery and equipment, number and qualification of crew or operating personnel, lines of the unit in case of a surface unit, trim, hull vibrations, spare parts including their number, location and fastening arrangements, life-saving appliances (except if **LSA** additional class notation, as defined in Ch 1, Sec 2, [8.3.5], is assigned), and maintenance equipment, remain therefore the responsibility of those parties, even if these matters may be given consideration for classification according to the type of unit or additional class notation assigned.

1.3.3 Certificate of classification

The class assigned to a unit by the Society following its interventions is embodied in a Certificate of Classification and noted in the appropriate Register.

At a certain date the class of a unit is maintained or regular when no surveys are overdue, when the conditions for suspension of class are not met and when the class is not withdrawn nor suspended. Otherwise the class is irregular. Attention is drawn on the fact that a unit holding a valid Certificate of Classification may be in an irregular class position.

1.3.4 Site conditions and related operating procedures

- It is incumbent to the Owners/Operators to perform the necessary investigations, including environmental and geotechnical surveys, prior to operating the unit at a given site.
- For permanent units, Owner/Operator is to provide supporting information to give evidence to the Society that the proposed design criteria are an adequate representations of the actual conditions on site, including both environmental and soil conditions.
- For other units, these investigations are to be conducted in order to ascertain that the actual conditions met at the contemplated operating site remain on the safe side when compared to design data and assumptions, particularly those listed in the Design Criteria Statement.

  Such site assessment is however not part of classification, which also does not cover the assessment of sea bottom conditions and geotechnical investigations or the assessment of possible sea floor movement.
- The procedures to be used for the unit's positioning, anchors setting and retrieving, legs lowering and jacking, preloading, jetting and other related operations are not part of Classification. It is the responsibility of the Owner, or of the Operator if distinct from the Owner, to ascertain that the said procedures and their implementation satisfy the design criteria of the unit and the design of the related equipment.

  For permanent units, above procedures are only considered in so far as they could affect the safety or integrity of completed installation on site.
- For other classification limits applicable to operating procedures, refer to Part B, Chapter 2.

1.3.5 Classification restrictions

When the design data and assumptions specified by the party applying for classification do not comply with the applicable Rule requirements, restrictions may be placed upon the unit's class.

When deemed necessary, restrictions may be placed on the duration of the operating life of the unit.

Class restrictions, if any, are to be endorsed as a Memorandum and are to be incorporated in the Operating Manual prescribed in [3.4].

1.4 Request for services

1.4.1 Requests for interventions by the Society, such as surveys during construction, surveys of units in service, tests, etc., are in principle to be submitted in writing and signed by the Interested Party. Such request implies that the applicant will abide by all the relevant requirements of the Rules, including the Marine Division General Conditions.

The Society reserves the right to refuse or withdraw the class of any unit for which any applicable requirement of the Rules is not complied with.

1.5 Register

1.5.1 A Register is published periodically by the Society. This publication, which is updated by the Society, contains the names of units which have received the Certificate of Classification, as well as particulars of the class assigned and information concerning each unit.

1.6 Design Criteria Statement

1.6.1 General

Classification is based upon the design data or assumptions specified by the party applying for classification.

A Design Criteria Statement is to list the service(s) performed by the unit and the design conditions and other assumptions on the basis of which class is assigned to the unit.

The Design Criteria Statement is issued by the Society, based on information provided by the party applying for classification.

The Design Criteria Statement is to be referred to in a Memorandum.

The Design Criteria Statement is to be incorporated in the Operating Manual as prescribed in [3.4].

1.6.2 Unit’s activities

The Design Criteria Statement is to list the main services for which the unit is designed, the service notation and other notations assigned to the unit.

The nature of the unit's activity is to be duly accounted for in the application of the present Rules, as far as classification is concerned.

The Design Criteria Statement is to mention when the unit is, or is part of, a permanent unit, and will make reference to the applicable site data.

1.6.3 Structural design criteria

The Design Criteria Statement is to list the necessary data pertaining to the structural design of the unit for the different conditions of operation of the unit, according to provisions of Part B, Chapter 2.

Note 1: Transit of non self-propelled units is covered by classification as regards only the unit's structural overall and local strength as well as stability. All other aspects relating to towing are reviewed only on special request for a towage survey.

Note 2: As regards design of the foundations of equipment, classification is based upon the data submitted by the party applying for classification, under the format called for by the Rules.

1.6.4 Machinery, electrical and other system design conditions

The party applying for classification is to submit the necessary description, diagrammatic plans, design data of all systems, including those used solely for the service (drilling, pipe laying, lifting, etc.) performed by the unit and, where applicable, their cross connections with other systems. The submitted data are to incorporate all information necessary to the assessment of the unit for the purpose of the assignment of class or for the assignment of additional class notations.

In accordance with [1.6.1] the party applying for classification is to give an estimation of electric balance for the different conditions of operation of the unit. The specifications are to list all important equipment and apparatus, their rating and the power factors as applicable.

1.7 Design life

1.7.1 Definition

For classification, a “design life” for structural strength and integrity assessment of unit hull and mooring is to be specified by the Party applying for classification at the time of design and construction. The default and minimum value usually considered is 20 years from the date of build.

In particular, the “design life” should be taken into account in the predictions of corrosion protection and fatigue strength, in conjunction with appropriate safety factors.

1.7.2 Unit modification

Unit modification may be required during the unit life. In such a case, the Owner and/or the operator are/is to carry out an assessment of the impact of modifications on the existing unit. The assessment is to be submitted to the Society.

The review of the assessment may result in requirement for a more comprehensive re-assessment due to the extent and impact of the modification and taking into account the unit age and condition.

1.7.3 Unit re-assessment

A complete re-assessment of the unit condition may be required in the following cases:

- if operating life is expected beyond “design life”
- deficiencies revealed during operation
- major modification.

The re-assessment is to address the actual situation (condition, modifications) of the unit and the current knowledge in site environmental conditions.

Classification requirements as result of the re-assessment, given in terms of required repair/renewal work, surveys, plan approval, possible limited class period, etc., will be evaluated on a case by case basis.

1.8 Non-permanently installed equipment

1.8.1 General

Non-permanent equipment means equipment not remaining on board during the operation of the offshore unit but installed periodically for the purpose of specific works.

1.8.2 Classed equipment

The Owner is to inform the Society about any classed equipment or part of classed equipment which is returned onshore for storage, modifications, repair or maintenance.

As a rule, the classed equipment is to be tested onshore after modifications, repair or maintenance, in accordance with the rules applicable for the classification of the equipment.

A release statement (attestation) is to be issued upon satisfactory completion of tests and visual examination.

The release statement is to be maintained on board the unit for verification during classification surveys.

1.8.3 Non-classed equipment

Unless otherwise specified, non-classed equipment which is not permanently installed and is used solely for operational activities is not covered by the rules.

1.9 Attachments of appurtenances

1.9.1 The attachments of appurtenances to the hull are within the scope of classification if the supported equipment is either within the scope of classification or essential for the safety of the unit.

Otherwise, the interface between classed and non-classed parts is to be defined on a case-by-case basis.

2 Rules

2.1 Rule application

2.1.1 The requirements of the present Rules are applicable to all offshore units, as defined in [4], unless a specific statement to the contrary is made.

Requirements of the present Rules may be made applicable to other units, when deemed appropriate by the Society.

The designer is to contact the Society for information about any amendments to these Rules.

The present Rules are not applicable to bottom founded fixed platforms.

2.2 Effective date

2.2.1 The effective date of entry into force of any amendments to the Rules is indicated on the inside front page of the Rules or in the relevant Section.

2.2.2 In principle, the applicable Rules for assignment of class to a new unit are those in force at the date of contract for construction.

2.2.3 Special consideration may be given to applying new or modified rule requirements which entered into force subsequent to the date of contract for construction, at the discretion of the Society and in the following cases:

- when a justified written request is received from the party applying for classification
- when the keel is not yet laid and more than one year has elapsed since the contract for construction was signed
- where it is intended to use existing previously approved plans for a new contract.

2.2.4 The above procedures for application of the Rules are, in principle, also applicable to existing units in the case of major conversions and, in the case of alterations, to the altered parts of the unit.

2.2.5 The rule requirements related to assignment, maintenance and withdrawal of the class of units already in operation are applicable from the date of their entry into force.

2.3 Equivalence

2.3.1 The Society may consider the acceptance of alternatives to these Rules, provided that they are deemed to be equivalent to the Rules to the satisfaction to the Society.

The Society may accept surveys and approval done by Administration or by a recognised organisation, concerning fire prevention, ventilation systems, means of escape in accommodation and service spaces. In such a case, supporting documents are to be transmitted to the Society.

2.3.2 Risk Based Inspection (RBI) may be considered as an element in application of [2.3.1].

2.3.3 On a case by case basis and upon request from the Owner, a specific in-service inspection programme may be approved by the Society, as an alternative to these Rules.

2.4 Novel features

2.4.1 The Society may consider the classification of units based on or applying novel design principles or features, to which the Rules are not directly applicable, on the basis of experiments, calculations or other supporting information provided to the Society. Specific limitations may then be indicated on a memorandum.

2.5 Disagreement and appeal

2.5.1 Any technical disagreement with the Surveyor in connection with the performance of his duties should be raised by the Interested Party as soon as possible.

The Interested Party may appeal in writing to the Society, which will subsequently consider the matter and announce its decision according to its established procedure.

2.6 Risk assessment and Rule application

2.6.1 As an alternative to the full application of the present prescriptive rules, a hazard analysis approach may be used to justify deviations or modifications from Rule requirements.

2.6.2 This alternative approach is authorised and encouraged as far as the class is concerned, under reserve of the agreement of the Owner when it leads to deviation from the Rules. Regarding the application to statutory requirements, attention is drawn upon the necessary agreement of the flag and/or coastal Authorities.

2.6.3 The risk levels obtained by the arrangement resulting from the analysis are to be as low as reasonably practicable.

2.6.4 It is to be noted that the use of prescriptive rules is not contradictory with the use in parallel of analytical methods, the rules deriving from collection and analysis of past experience.

2.6.5 The analysis is to be documented and a complete file is to be submitted to the Society for agreement.

3 Duties of the Interested Parties

3.1 International and national regulations

3.1.1 The classification of a unit does not relieve the Interested Party from compliance with any requirements issued by Administrations.

3.1.2 Where requirements of International Conventions, such as SOLAS, ILLC, MARPOL, ILO or of IMO Assembly Resolutions, are quoted as excerpts, they are printed in italic type replacing the word “Administration” by “Society”.

These requirements are quoted for ease of reference.

3.1.3 When authorised by the Administration concerned, the Society will act on its behalf within the limits of such authorisation. In this respect, the Society will take into account the relevant national requirements, survey the unit, report and issue or contribute to the issue of the corresponding certificates.

The above surveys do not fall within the scope of the classification of units, even though their may overlap in part and may be carried out concurrently with surveys for assignment or maintenance of class.

3.1.4 In the case of a discrepancy between the provisions of the applicable international and national regulations and those of the Rules, normally, the former take precedence. However, the Society reserves the right to call for the necessary adaptation to preserve the intention of the Rules or to apply the provisions of [1.4.1].

3.2 Surveyor's intervention

3.2.1 Surveyors are to be given free access at all times to units which are classed or being classed, shipyards and works, to carry out their interventions within the scope of assignment or maintenance of class, or within the scope of interventions carried out on behalf of Administrations, when so delegated.

Free access is also to be given to auditors accompanying the Surveyors of the Society within the scope of the audits as required in pursuance of the Society's internal Quality System or as required by external organizations.

3.2.2 Interested Parties are to take the necessary measures for the Surveyors' inspections and testing to be carried out safely. Interested Parties - irrespective of the nature of the service provided by the Surveyors of the Society or others acting on its behalf - assume with respect to such Surveyors all the responsibility of an employer for his workforce such as to meet the provisions of applicable legislation. As a rule, the Surveyor is to be constantly accompanied during surveys by personnel of the Interested Party.

Interested Parties are to inform promptly the Surveyor of defects or problems in relation to class.

Refer also to the Ship Rules, Pt A, Ch 2, Sec 2, [2.5] to Pt A, Ch 2, Sec 2, [2.8].

3.2.3 The Certificate of Classification and/or other documents issued by the Society remain the property of the Society. All certificates and documents necessary to the Surveyor's interventions are to be made available by the Interested Party to the Surveyor on request.

3.2.4 During the phases of unit design and construction, due consideration should be given to rule requirements in respect of all necessary arrangements for access to spaces and structures with a view to carrying out class surveys. Arrangements of a special nature are to be brought to the attention of the Society.

3.3 Operation and maintenance of units

3.3.1 The classification of a unit is based on the understanding that the unit is loaded and operated in a proper manner by competent and qualified crew or operating personnel according to the environmental, loading, operating and other criteria on which classification is based.

In particular, it will be assumed that the draught of the unit in operating conditions will not exceed that corresponding to the freeboard assigned or the maximum approved for the classification, that the unit will be properly loaded taking into account both its stability and the stresses imposed on its structures and that cargoes will be properly stowed and suitably secured and that the speed and course of the unit are adapted to the prevailing sea and weather conditions, according to the normal prudent seamanship.

In the same way, it will be assumed that the draught of the unit in operating conditions will not be lower than the minimum draught approved for the classification.

3.3.2 Units are to be maintained at all times, at the diligence of the Owners, in proper condition complying with international safety and pollution prevention regulations.

3.3.3 Any document issued by the Society in relation to its interventions reflects the condition of the unit as found at the time and within the scope of the survey. It is the Interested Party's responsibility to ensure proper maintenance of the unit until the next survey required by the Rules. It is the duty of the Interested Party to inform the Surveyor when he boards the unit of any events or circumstances affecting the class.

3.4 Operating Manual

3.4.1 An Operating Manual, which includes instructions regarding the safe operation of the unit and of the systems and equipment fitted on the unit, is to be placed onboard the unit.

The Operating Manual is to incorporate a dedicated section containing all information relating to classification, particularly environmental, loading and other design criteria as well as classification restrictions. The Operating Manual is to be, at all times, placed on board the unit and made available to all concerned. A copy of the Operating Manual is to be retained ashore by the Owners of the unit or their representatives.

It is the responsibility of the Interested Party to prepare the contents of the Operating Manual.

3.4.2 The Operating Manual is to be submitted for review to the Society, this review being limited to checking that the classification related material contained in the dedicated section mentioned in [3.4.1] is consistent with data given in the Design Criteria Statement (see [1.6] and Part B, Chapter 2).

3.4.3 When a construction portfolio is not required according to Ch 1, Sec 3, [2.4], the Operating Manual is to contain all reviewed drawings relative to structural strength, stability, fire and explosion safety.

3.5 Flag and Port State Control inspections

3.5.1 Where defects are found further to an inspection by an Administration in pursuance of Port State Control or similar programmes, Owners are to:

- immediately report the outcome of this inspection to the Society, and

- ask the Society to perform an occasional survey in order to verify that the deficiencies, when related to the class of the unit or to the statutory certificates issued by the Society on behalf of the flag Administration, are rectified and/or the necessary repair work is carried out within the due time.

3.6 Use of measuring equipment and of service suppliers

3.6.1 General

Firms providing services on behalf of the Interested Party, such as measurements, tests and servicing of safety systems and equipment, the results of which may form the basis for the Surveyor's decisions, are subject to the acceptance of the Society, as deemed necessary.

The equipment used during tests and inspections in workshops, shipyards and on board units, the results of which may form the basis for the Surveyor's decisions, is to be customary for the checks to be performed. Firms are to individually identify and calibrate to a national or international standard each piece of such equipment.

3.6.2 Simple measuring equipment

The Surveyor may accept simple measuring equipment (e.g. rulers, tape measures, weld gauges, micrometers) without individual identification or confirmation of calibration, provided it is of standard commercial design, properly maintained and periodically compared with other similar equipment or test pieces.

3.6.3 Onboard measuring equipment

The Surveyor may accept measuring equipment fitted on board a unit (e.g. pressure, temperature or rpm gauges and meters) and used in examination of onboard machinery and/or equipment based either on calibration records or comparison of readings with multiple instruments.

3.7 Spare parts

3.7.1 It is the Owner's responsibility to decide whether and which spare parts are to be carried on board.

3.7.2 As spare parts are outside the scope of classification, the Surveyor will not check that they are kept on board, maintained in a satisfactory condition, or suitably protected and lashed.

However, in the case of repairs or replacement, the spare parts used are to meet the requirements of the Rules as far as practicable.

4 Definitions

4.1 Offshore units

4.1.1 For the purpose of the application of the present Rules, an offshore unit is defined as a unit fulfilling simultaneously the following conditions:

- to be designed for use in connection with offshore recovery of subsea resources including but not limited to hydrocarbons
- to be of a normally floating type, or to be so designed as to be capable of being moved from one operating site to another in a floating mode.

Other units, not fulfilling the above, may be also considered as offshore units, where deemed appropriate by the Society.

The present Rules are not applicable to bottom founded fixed platforms.

4.2 Propulsion

4.2.1 Self-propelled units

A self-propelled unit is a unit capable of unassisted transit between different geographic locations.

Note 1: Units capable of short moves from one operating location to another close one are not considered as self-propelled units.

4.2.2 National and international regulations

The Owners' attention is drawn to different national or international regulations applicable to self-propelled units.

4.3 Units' structural types

4.3.1 Surface units

Surface units, for the application of the present Rules, are floating units designed with a displacement-type single hull.

A ship is a self-propelled surface unit.

A barge is a non propelled surface unit.

Note 1: This structural type generally excludes the self-elevating units.

4.3.2 Submersible units

A submersible unit is a unit capable of being designed to rest on the sea bed under working condition and capable, when deballasted to be kept afloat in a semi-submerged position.

4.3.3 Column stabilized units

Column stabilized units are designed with their main deck, which supports most of the equipment, connected to underwater hulls or footings by columns. Bracings may be provided between the lower hulls or footings, the columns and the deck structure.

4.3.4 Self-elevating units

Self-elevating or jack-up units are designed with legs capable of being lowered to the sea bed and of raising the unit hull, which supports the equipment, above the sea surface.

The unit's legs may be of a shell (cylindrical) or truss (tubular or structural sections) type. The legs may be equipped with a lower mat or with footings designed to penetrate the sea bed.

The unit's legs may be vertical or slanted.

4.3.5 SPAR

A SPAR is a floating structure consisting of a large diameter single vertical cylinder supporting fixed platform topside.

4.3.6 Tension Leg Platform (TLP)

Tension leg platforms (TLP) are buoyant structures vertically moored, wherein the excess buoyancy of the platform maintains tension in the mooring system (tether, tendon).

4.3.7 Buoys

A buoy is a floating body, not normally manned, generally of a cylindrical shape, and fitted with mooring equipment as necessary to perform the mooring of a vessel and ensuring fluid transfer between production and/or storage unit or onshore installation and the moored vessel.

It is composed of the following main parts:

- a hull providing buoyancy and stability
- a rotating part to which the vessel is moored and that allows weathervaning
- a fixed part to which the mooring lines and underbuoy pipes are connected.

Note 1: The hull may be either the rotating part or the fixed part.

4.3.8 Other structural types

Units of other structural types will be given special consideration.

4.3.9 Structural type notations

The structural type notations corresponding to the structural types described in [4.3] are defined in Ch 1, Sec 2, [4].

4.4 Units' services

4.4.1 Drilling and drilling assistance

For the purpose of the present Rules, drilling includes drilling activities for the exploration of the seabed and/or exploitation of subsea resources including but not limited to hydrocarbons.

For the purpose of the present Rules, drilling assistance includes activities related to drilling without involving the use of a drilling derrick, such as mud treatment, tendering, well remedial or other servicing activities, etc.

The following types of drilling units are considered:

- Self-elevating drilling units

  Self-elevating drilling units have hulls with sufficient buoyancy to safely transport the unit to the desired location, after which the hull is raised to a predetermined elevation above the sea surface on its legs, which are supported on the sea bed. Drilling equipment and supplies may be transported on the unit, or may be added to the unit in its elevated position. The legs of such units may penetrate the sea bed, may be fitted with enlarged sections or footings to reduce penetration, or may be attached to a bottom pad or mat.

- Column stabilized drilling units

  Column stabilized drilling units depend upon the buoyancy of widely spaced columns for flotation and stability for all afloat modes of operation or in the raising or lowering of the unit, as may be applicable. The columns are connected at their top to an upper structure supporting the drilling equipment. Lower hulls or footings may be provided at the bottom of the columns for additional buoyancy or to provide sufficient area to support the unit on the sea bed. Bracing members of tubular or structural sections may be used to connect the columns, lower hulls or footings and to support the upper structure. Drilling operations may be carried out in the floating condition, in which condition the unit is described as a semi-submersible, or when the unit is supported by the sea bed, in which condition the unit is described as a submersible. A semi-submersible unit may be designed to operate either floating or supported by the sea bed, provided each type of operation has been found to be satisfactory.

- Surface type drilling units
  - Ship type drilling units are seagoing ship-shaped units having a displacement-type hull or hulls, of the single, catamaran or trimaran types, which have been designed or converted for drilling operations in the floating condition. Such types have propulsion machinery.
  - Barge type drilling units are seagoing units having a displacement type hull or hulls, which have been designed or converted for drilling operations in the floating condition. These units have no propulsion machinery.
- Other types of drilling units

  Units which are designed as mobile offshore drilling units and which do not fall into the above mentioned categories will be treated on an individual basis and be assigned an appropriate classification designation.

4.4.2 Oil and gas production and related services

For the purpose of the present Rules:

- production means processing of oil/gas well effluents prior to exporting or storage
- storage means storage (in significant quantities) of hydrocarbons (oil, gas), or other subsea resources, prior to exporting
- offloading means facilities to transfer stored hydrocarbons to shuttle ships or to pipelines.

4.4.3 Other services

Other services are purposes other than drilling, production and related activities, i.e.:

- construction, maintenance and support activities: lifting, pipe laying, diving support, accommodation and jacket launching
- other services which may be defined by the party applying for classification.

4.4.4 Service notations

The service notations corresponding to the services described in [4.4] are defined in Ch 1, Sec 2, [4].

4.5 Units' operation

4.5.1 Nature of the unit

a) Permanent unit

A permanent unit is a unit performing its service for a duration of not less than 5 years on a single site. A permanent unit is to be assigned with a site notation.

b) Disconnectable permanent unit

A disconnectable permanent unit is a permanent unit able of disengaging from its mooring and riser systems in extreme environmental or emergency conditions.

c) Mobile unit

A mobile unit is a unit which does not correspond to definitions of items a) and b).

4.5.2 Conditions of operations

a) Working conditions

Working conditions are conditions wherein a unit is on location and performs its service(s), as defined by its service notation, operational and environmental loads remaining within design limits corresponding to this (these) service(s). The unit may be floating or supported by the sea-bed, as applicable.

b) Severe storm conditions

Severe storm conditions are the most severe environmental conditions which the unit is designed to withstand, this unit being floating or supported by the sea-bed, as applicable. These conditions may discontinue the activities of the unit (for drilling units, the riser may be disconnected; for pipe laying units, the pipe may be disconnected and the stinger raised; for crane barges, the boom may be laid down in its cradle, etc.).

c) Transit conditions

Transit condition is condition wherein a unit is moving from one location to another.

Transit includes short duration field moves, between locations in close proximity, and ocean transit, for which a specific preparation of the unit is generally needed.

The unit may be self-floating or supported by a transportation barge or vessel, as applicable. Some design limits to environmental loads may be specified.

The initial transportation to site of a permanent unit is also considered as a transit condition.

4.6 Temporary mooring and position anchoring

4.6.1 Temporary mooring

Surface units may be provided with classical temporary mooring equipment.

The Owners' attention is drawn to applicable national regulations regarding mooring of surface units, particularly self-propelled units.

4.6.2 Station keeping

Station keeping herein means deep sea or location mooring and/or dynamic positioning.

The purpose of positioning equipment and machinery is to maintain the unit on location, within station keeping requirements, in view of its designed functions.

Station keeping may be either passive, by means of catenary equipment (position anchoring) or active (dynamic positioning) or may involve a combination of these.

Additional class notations and service features corresponding to position anchoring and to dynamic positioning are dealt with in Ch 1, Sec 2, [6.2] and Ch 1, Sec 2, [8.4] respectively.

4.7 Dimensions and characteristics

4.7.1 Water depth

The nominal water depth is the vertical distance from the sea bed to a reference sea surface level (such as the Chart Datum).

The design maximum water depth is the vertical distance from the sea bed to the highest still water surface, including astronomical tide and storm (wind and pressure differential) tide.

4.7.2 Dimensions

Except for surface units, all dimensions such as length, breadth, depth relate to overall dimensions, measured without taking into account locally protruding elements (for instance stinger foundations, anchor racks, fenders, etc.).

For surface units, definitions of breadth, moulded depth and block coefficient given in the Ship Rules are applicable.

4.7.3 Draughts

The moulded draughts are the vertical distances between the moulded base line and the water lines in different afloat conditions.

Certain components of a unit's structure, machinery or equipment may extend below the moulded base line.

4.7.4 Lightweight

Lightweight is defined as the weight of the complete unit with all its permanently installed machinery, equipment and outfit, including permanent ballast, spare parts normally retained on board and liquids in machinery and piping to their normal working level, but does not include liquids in storage or reserve supply tanks, items of consumable or variable loads, stores or crew and their effects.

4.7.5 Moulded base line

The moulded base line is a horizontal line extending through the upper surface of the bottom plating.

4.8 Other definitions

4.8.1 International instruments

- SOLAS means the 1974 International Convention for the Safety Of Life At Sea, as amended
- ILLC means the 1966 International Convention on Load Lines, as amended
- MODU Code means the IMO Code for the Construction and Equipment of Mobile Offshore Drilling Units, as amended
- MARPOL means the 1973 International Convention for Prevention of Pollution from Ships and its 1978 Protocol, as amended
- COLREG means the 1972 Convention on the International Regulations for Preventing Collisions at Sea, as amended.

Section 2 Classification Notations

1 General

1.1 Purpose of the classification notations

1.1.1 The classification notations give the scope according to which the class of the unit has been based and refer to the specific rule requirements which are to be complied with for their assignment. In particular, the classification notations are assigned according to the type, service and navigation of the unit and other criteria which have been+ provided by the Interested Party, when applying for classification.

The Society may change the classification notations at any time, when the information available shows that the requested or already assigned notations are not suitable for the intended service, navigation and any other criteria taken into account for classification.

Note 1: Reference should be made to Ch 1, Sec 1, [1.3] on the limits of classification and its meaning.

1.1.2 The classification notations assigned to a unit are indicated on the Certificate of Classification, as well as in the Register published by the Society.

1.1.3 The classification notations applicable to existing units conform to the Rules of the Society in force at the date of assignment of class, as indicated in Ch 1, Sec 3. However, the classification notations of existing units may be updated according to the current Rules, as far as applicable.

1.2 Types of notations assigned

1.2.1 The types of classification notations assigned to a unit are the following:

- class symbol
- construction marks
- structural type notations with additional service features, as applicable
- service notations with additional service features, as applicable
- site notation
- transit notation
- navigation notations
- additional class notations.

The different classification notations and their conditions of assignment are listed in Articles [2] to [9], according to their types.

1.2.2 As an example, the classification notations assigned to a unit may be as follow (the kind of notation shown in brackets does not form part of the classification notation indicated in the Register and on the Certificate of Classification):

I ✠ HULL ✠ MACH

(class symbol, construction marks)

offshore barge

(structural type notation)

oil production unit/oil storage

(service notations)

Dalissol field - unrestricted navigation

(site notation/navigation notation)

transit - unrestricted navigation

(transit notation/navigation notation)

PERMANENT ✠ POSA

(additional service features)

✠ AUTO ✠ VeriSTAR-HULL ✠ ALM

(additional class notation)

2 Class symbol

2.1 General

2.1.1 The class symbol expresses the degree of compliance of the unit with the rule requirements as regards its construction and maintenance. There is one class symbol, which is compulsory for every classed unit.

2.1.2 The class symbol **I** is assigned to units built in accordance with the requirements of the Rules or other rules recognised as equivalent, and maintained in a condition considered satisfactory by the Society.

The period of class (or interval between class renewal surveys) assigned to class symbol **I** units is maximum 5 years.

Note 1: The class symbol **I** is to be understood as being the highest class granted by the Society.

2.1.3 The class symbol **II** is assigned to units which do not meet all requirements for class symbol **I**, but are deemed acceptable to be entered into the Register.

The period of class assigned to class symbol **II** units is maximum 3 years.

2.1.4 Except for special cases, class is assigned to a unit only when the hull, propulsion and auxiliary machinery installations, and equipment providing essential services have all been reviewed in relation to the requirements of the Rules.

3 Construction marks

3.1 General

3.1.1 The construction mark identifies the procedure under which the unit and its main equipment or arrangements have been surveyed for initial assignment of the class. The procedures under which the unit is assigned one of the construction marks are detailed in Ch 1, Sec 3.

3.1.2 One of the construction marks defined below is assigned separately to the hull of the unit and its appendages, to the machinery installation, and to some installations for which an additional classification notation is assigned.

The construction mark is placed before the symbol **HULL** for the hull, before the symbol **MACH** for the machinery installations, and before the additional class notation granted, when such a notation is eligible for a construction mark.

If the unit has no machinery installations covered by classification, the symbol **MACH** is not granted and the construction mark is to be only placed before the symbol **HULL**.

3.1.3 The construction marks refer to the original condition of the unit. However, the Society may change the construction mark where the unit is subjected to repairs, conversion or alterations.

3.2 List of construction marks

3.2.1 The mark ✠ is assigned to the relevant part of the unit, when it has been surveyed by the Society during its construction in compliance with the new building procedure detailed in Ch 1, Sec 3.

3.2.2 The mark ✠ is assigned to the relevant part of the unit, when the latter is classed after construction and is changing class from an IACS Society at the time of the admission to class.

3.2.3 The mark • is assigned to the relevant part of the unit, where the procedure for the assignment of classification is other than those detailed in [3.2.1] and [3.2.2], but however deemed acceptable.

4 Structural type notations and associated additional service features

4.1 General

4.1.1 The structural type notation of a unit identifies its structural type, as defined in Ch 1, Sec 1, [4.3] to which it belongs.

At least one of the structural type notations listed in Tab 1 is to be assigned to every classed unit.

4.1.2 A structural type notation may be completed by one or more additional service features, giving further precision regarding the type of the unit for which specific rule requirements are applied.

Table 1 : List of structural type notations and associated additional service features

Structural type notation [ref. in Part A] **Additional service feature**	Reference Reference	Remarks
offshore ship [4.1.3]		
MOBILE or **PERMANENT** [6.1]		
POSA, **POSA-HR** or **POSA JETTY** [6.2.1]**(1)**	NR493	mandatory for permanent units
POSA MU [6.2.2]**(1)**	NR493	
offshore barge [4.1.4]		
MOBILE or **PERMANENT** [6.1]		
POSA, **POSA-HR** or **POSA JETTY** [6.2.1]**(1)**	NR493	mandatory for permanent units
POSA MU [6.2.2]**(1)**	NR493	
offshore submersible unit [4.1.5]		
MOBILE or **PERMANENT** [6.1]		
column stabilized unit [4.1.6]	NR571	
MOBILE or **PERMANENT** [6.1]		
POSA, **POSA-HR** or **POSA JETTY** [6.2.1]**(1)**	NR493	mandatory for permanent units
POSA MU [6.2.2]**(1)**	NR493	
self-elevating unit [4.1.7]	NR534	
MOBILE or **PERMANENT** [6.1]		
offshore SPAR [4.1.8]		
MOBILE or **PERMANENT** [6.1]		
POSA or **POSA-HR** [6.2.1]**(1)**	NR493	mandatory
offshore TLP [4.1.9]	NR578	
MOBILE or **PERMANENT** [6.1]		
TLS or **TLS PLUS** [4.1.9]	NR578	mandatory
offshore buoy [4.1.10]	NR494	
MOBILE or **PERMANENT** [6.1]		
POSA or **POSA-HR** [6.2.1]**(1)**	NR578	mandatory
offshore special type unit ( ) [4.1.11]		
MOBILE or **PERMANENT** [6.1]		
POSA, **POSA-HR** or **POSA JETTY** [6.2.1]**(1)**	NR493	mandatory for permanent units
POSA MU [6.2.2]**(1)**	NR493	
(1) A construction mark is added to the additional service feature.		

4.1.3 Offshore ship

The structural type notation **offshore ship** is assigned to self-propelled surface units defined in Ch 1, Sec 1, [4.3.1].

One of the additional service features **MOBILE** or **PERMANENT** is to be assigned in accordance with [6.1].

For permanent units, one of the additional service features **POSA**, **POSA-HR** or **POSA JETTY** is to be assigned in accordance with [6.2].

Mobile units may be assigned the additional service feature **POSA MU** as defined in [6.2].

4.1.4 Offshore barge

The structural type notation **offshore barge** is assigned to non-propelled surface units defined in Ch 1, Sec 1, [4.3.1].

One of the additional service features **MOBILE** or **PERMANENT** is to be assigned in accordance with [6.1].

For permanent units, one of the additional service features **POSA**, **POSA-HR** or **POSA JETTY** is to be assigned in accordance with [6.2].

Mobile units may be assigned the additional service feature **POSA MU** as defined in [6.2].

4.1.5 Offshore submersible unit

The structural type notation **offshore submersible unit** is assigned to units defined in Ch 1, Sec 1, [4.3.2].

One of the additional service features **MOBILE** or **PERMANENT** is to be assigned in accordance with [6.1].

4.1.6 Column stabilized unit

The structural type notation **column stabilized unit** is assigned to units defined in Ch 1, Sec 1, [4.3.3].

One of the additional service features **MOBILE** or **PERMANENT** is to be assigned in accordance with [6.1].

For permanent units, one of the additional service features **POSA**, **POSA-HR** or **POSA JETTY** is to be assigned in accordance with [6.2].

Mobile units may be assigned the additional service feature **POSA MU** as defined in [6.2].

4.1.7 Self-elevating unit

The structural type notation **self-elevating unit** is assigned to units defined in Ch 1, Sec 1, [4.3.4].

One of the additional service features **MOBILE** or **PERMANENT** is to be assigned in accordance with [6.1].

4.1.8 Offshore SPAR

The structural type notation **offshore SPAR** is assigned to units defined in Ch 1, Sec 1, [4.3.5].

One of the additional service features **MOBILE** or **PERMANENT** is to be assigned in accordance with [6.1].

The notation is to be completed by one of the additional service features **POSA** or **POSA-HR** as defined in [6.2].

4.1.9 Offshore TLP

The structural type notation **offshore TLP** is assigned to units defined in Ch 1, Sec 1, [4.3.6].

One of the additional service features **MOBILE** or **PERMANENT** is to be assigned in accordance with [6.1].

The structural type notation **offshore TLP** is to be completed by one of the following additional service features, as defined in NR578 Rules for the Classification of Tension Leg Platforms (TLP):

- **TLS**, Tension Leg System

  In principle, the additional service feature **TLS** adopts the same level of safety as API RP 2T recommendations.
- **TLS PLUS**, Tension Leg System PLUS

  In addition to the requirements applicable for **TLS**, the additional service feature **TLS PLUS** requires the verification of tendon legs system under some additional loading conditions for higher redundancy.

Note 1: The scope of **TLS** notation can be extended to tandem connection with a specific second unit.

4.1.10 Offshore buoy

The structural type notation **offshore buoy** may be assigned to units defined in Ch 1, Sec 1, [4.3.7].

One of the additional service features **MOBILE** or **PERMANENT** is to be assigned in accordance with [6.1].

The notation is to be completed by one of the additional service features **POSA** or **POSA-HR** as defined in [6.2].

The specific service notations to be assigned to **offshore buoy** are defined in [5.5].

4.1.11 Offshore special type unit ( )

The structural type notation **offshore special type unit ( )** may be assigned to units not belonging to any of the other structural types.

The mention between brackets is to be completed according to the specific type of the unit, in agreement with the Society.

One of the additional service features **MOBILE** or **PERMANENT** is to be assigned in accordance with [6.1].

For permanent units, one of the additional service features **POSA**, **POSA-HR** or **POSA JETTY** is to be assigned in accordance with [6.2].

Mobile units may be assigned the additional service feature **POSA MU** as defined in [6.2].

5 Service notations and corresponding additional service features

5.1 General

5.1.1 The service notations define the service of the unit which have been considered for its classification, according to the request for classification signed by the Interested Party. At least one service notation is to be assigned to every classed unit.

Note 1: The service notations applicable to existing units conform to the Rules of the Society in force at the date of assignment of class. However, the service notations of existing units may be updated according to the current Rules, as far as applicable, at the request of the Interested Party.

5.1.2 The assignment of any service notation to a new unit is subject to compliance with general rule requirements laid down in Part B and Part C of the Rules and in NR216 Rules on Materials and Welding for the Classification of Marine Units and, for some service notations, with the additional requirements laid down in Part D or in separate Rule Notes.

5.1.3 A unit may be assigned several different service notations. In such case, the specific rule requirements applicable to each service notation are to be complied with. However, if there is any conflict in the application of the requirements applicable to different service notations, the Society reserves the right to apply the most appropriate requirements or to refuse the assignment of one of the requested service notations.

5.1.4 A service notation may be completed by one or more additional service features, giving further precision regarding the type of service of the unit, for which specific rule requirements are applied.

5.1.5 The different service notations which may be assigned to a unit are listed in [5.2] to [5.7], according to the category to which they belong. These service notations are also listed in Tab 2.

Several service notations may be assigned, e.g.:

pipelaying / lifting / diving support-integrated

Table 2 : List of service notations and associated additional service features

Service notation [ref. in Part A] **Additional service feature**	Reference Reference	Remarks
accommodation [5.4.3]		
drilling [5.3.1]	NR569	The type of drilling service may be indicated between brackets. Eg: **drilling (geotechnical)**, **drilling (workover)**
POSA MU (1) [6.2.2]	NR493	Mandatory for units fitted with passive station keeping system
drilling assistance [5.3.2]	NR569	
FSRU [5.2.6]	NR645	
FSU-LNG [5.2.6]	NR645	
gas liquefaction unit [5.2.4]	NR542	
gas production unit [5.2.5]	NR542	
INERTGAS [6.3.1]	Part D, Chapter 1	
jacket launching [5.4.4]		
lifting [5.4.1]	Ship Rules, Part E Chapter 8**(2)(3)**	The lifting appliance is to be certified and at least one of the following additional class notations is to be assigned: **ALM** or **OHS**
liquefied gas storage [5.2.3]	NR542	
SLOSHING [5.2.3]	NI554	Mandatory for units using membrane tanks for cargo containment
INERTGAS [6.3.1]	Part D, Chapter 1	
oil production unit [5.2.2]	Part D, Chapter 1	
INERTGAS [6.3.1]	Part D, Chapter 1	Mandatory for units having integrated process tanks
oil loading [5.5.1] **oil offloading** [5.5.1]	NR494	Applicable to offshore buoys
oil storage [5.2.1]	Part D, Chapter 1	
INERTGAS [6.3.1]	Part D, Chapter 1	Mandatory for storage > 8000 t
gas/condensate loading [5.5.1] **gas condensate offloading** [5.5.1]	NR494	Applicable to offshore buoys
pipelaying [5.4.2]		
FOWT [5.6.1]	NI572	Floating Offshore Wind Turbine
special service ( ) [5.7]		An additional service feature may be added to identify the particular service in which the unit is intended to operate

(1) A construction mark is added to the additional service feature
(2) As applicable
(3) Specific stability criteria for units assigned with the structural type notation **column stabilized unit** are given in Pt B, Ch 1, Sec 1, [6]

5.2 Oil and gas production and related services

5.2.1 Oil storage unit

The service notation **oil storage** may be assigned to units engaged in the storage of oil products (in significant quantities). The requirements of Part D, Chapter 1 are applicable to these units.

The additional service feature **INERTGAS** as defined in [6.3] is to be assigned to units having the service notation **oil storage**.

5.2.2 Oil production unit

The service notation **oil production unit** may be assigned to units equipped for oil production and related activities, as defined in Ch 1, Sec 1, [4.4].

The requirements of Part D, Chapter 1 are applicable to these units. Production equipment is not included in the scope of classification except when the additional class notation **PROC** as defined in [8.3.3], is assigned to the unit.

The additional service feature **INERTGAS**, as defined in [6.3], is to be assigned to units assigned with the service notation **oil production unit** and fitted with integrated process tanks or with tanks cleaning procedure using crude oil washing.

5.2.3 Liquefied gas storage unit

The service notation **liquefied gas storage** may be assigned to units designed and equipped for the storage of liquefied gases (in significant quantities). The requirements of NR542 Rules for the Classification of Floating Gas Units are applicable to these units.

The additional service feature **INERTGAS**, as defined in [6.3] may be assigned to units granted with the service notation **liquefied gas storage**, when they are equipped with an inert gas plant for condensate storage tanks complying with the corresponding provisions of Part D, Chapter 1. This additional service feature applies also to gas blanketing systems.

The additional service feature **SLOSHING** is to be assigned to units granted with the service notation **liquefied gas storage**, when they are equipped with membrane tanks for cargo containment.

Note 1: **SLOSHING** may also be requested by the Society on a case-by-case basis for containment systems other than membrane type, if deemed necessary considering the specific design of the containment system.

The requirements for the assignment of the additional service feature **SLOSHING** are given in NI554 Sloshing Assessment.

5.2.4 Gas liquefaction unit

The service notation **gas liquefaction unit** may be assigned to units designed and equipped for gas liquefaction and complying with the requirements of NR542 Rules for the Classification of Floating Gas Units.

The service notation **gas liquefaction unit** is mandatory for units granted with the service notation **liquefied gas storage** when the liquefaction plant is necessary for compliance with the requirements of IGC Code, Chapter 7.

Liquefaction equipment is not included in the scope of classification except when the additional class notation **PROC-GL**, as defined in [8.3.3], is assigned.

5.2.5 Gas production unit

The service notation **gas production unit** may be assigned to units designed and equipped to receive gas and to process it.

Relevant requirements of NR542 Rules for the Classification of Floating Gas Units are applicable to these units.

Production equipment is not included in the scope of classification except when the additional class notation **PROC**, as defined in [8] is assigned.

Production equipment is not included in the scope of classification except when the additional class notation **PROC-GP**, as defined in [8.3.3] is assigned.

5.2.6 Floating storage regasification unit (FSRU) and floating storage unit (FSU)

The service notations **FSRU** and **FSU-LNG** may be assigned to floating storage regasification units (FSRUs) and floating storage units (FSUs) respectively, designed to operate as a regasification and/or storage unit permanently moored without trading LNG.

The requirements of NR645 Rules for the Classification of Floating Storage Regasification Units and Floating Storage Units are applicable to these units. Typical notations to be assigned to complete the service notations **FSRU** and **FSU-LNG** are described in NR645.

5.3 Drilling and drilling assistance units

5.3.1 The service notation **drilling** may be assigned to units engaged in drilling activities as defined in Ch 1, Sec 1, [4.4].

Drilling equipment is not included in the scope of classification, except when the additional class notation **DRILL**, as defined in [8], is granted.

This service notation may be completed by an indication between brackets of the type of drilling service the unit is engaged in, such as the following examples:

drilling (geotechnical)

drilling (workover)

The additional service feature **POSA MU**, as defined in [6.2], is mandatory for drilling units fitted with passive mooring systems.

5.3.2 The service notation **drilling assistance** may be assigned to units engaged in drilling assistance, as defined in Ch 1, Sec 1, [4.4].

Specific equipment used for drilling assistance is not included in the scope of classification

The additional service feature **POSA-MU** defined in [6.2] may be assigned to these units.

5.4 Offshore service vessels

5.4.1 The service notation **lifting** may be assigned to units having lifting equipment installed on-board and performing lifting operations at sea.

The requirements for the assignment of this notation are given in:

- Ship Rules, Pt E, Ch 8, Sec 2 to Pt E, Ch 8, Sec 6, as applicable
- Part B and Part C of the present Rules
- for units having the structural type notation **column stabilized unit**, specific stability criteria given in Pt B, Ch 1, Sec 1, [6].

References and list of documents to be submitted are defined in Ship Rules, Pt E, Ch 8, Sec 1, [3] and Pt E, Ch 8, Sec 1, [4] respectively.

The requirements for the maintenance of the notation **lifting** are given in Ch 2, Sec 9, [10].

Note 1: Note 1: The service notation **lifting** can only be granted to the offshore unit if the corresponding lifting appliance is covered by at least one of the additional class notations **ALM** or **OHS** to be assigned to the offshore unit.

5.4.2 The service notation **pipelaying** may be assigned to units having specific equipment for pipe laying activities fitted on-board.

The pipe laying equipment is not included in the scope of classification except when the additional class notation **OHS** is granted.

5.4.3 The service notation **accommodation** may be assigned to units specially intended for accommodation of personnel engaged in offshore activities.

5.4.4 The service notation **jacket launching** may be assigned to units having specific equipment for jacket launching activities fitted on board.

5.5 Offshore buoys

5.5.1 The service notations listed below may be granted only to offshore floating buoys complying with the requirements stipulated in NR494 Rules for the Classification of Offshore Loading and Offloading Buoys:

- **oil loading**
- **oil offloading**
- **gas/condensate loading**
- **gas/condensate offloading**

5.6 Marine Renewable Energy Converters

5.6.1 The service notation **FOWT** may be assigned to Floating Offshore Wind Turbine.

The requirements of NI572 Classification and certification of floating offshore wind turbines are applicable to these units.

5.7 Special service ( )

5.7.1 The service notation **special service ( )** may be assigned to units which, due to the peculiar characteristics of their activity, are not covered by any of the above mentioned notations. The classification requirements of such units are considered by the Society on a case by case basis. An additional service feature may be specified after the notation to identify the particular service in which the unit is intended to operate. The scope and criteria of classification of such units are indicated in a memorandum.

6 Additional service features applicable to several structural type or service notations

6.1 Mobile and permanent units (MOBILE / PERMANENT)

6.1.1 PERMANENT

The additional service feature **PERMANENT** is assigned to units permanently moored for a period equal to or greater than 5 years at a single location with no drydock.

6.1.2 MOBILE

The additional service feature **MOBILE** is assigned to seagoing units or stationary units moored for period less than indicated in [6.1.1].

6.2 Station keeping (POSA)

6.2.1 Permanent units

The additional service feature **POSA** is assigned to units equipped with position anchoring equipment complying with the applicable requirements of NR493 Classification of Mooring Systems for Permanent and Mobile Offshore Units.

The additional service feature **POSA-HR** (Higher Redundancy) may be assigned in substitution to the notation **POSA**, based on the provisions of NR493.

For units moored to a jetty with a permanent position mooring equipment complying with the applicable requirements of NR493 the additional service feature **POSA JETTY** is to be assigned in substitution to **POSA**.

A construction mark is to be added to these additional service features.

The requirements for the maintenance of these notations are given in Ch 2, Sec 9.

Note 1: The scope of **POSA** notation can be extended to tandem connection with a specific second unit.

6.2.2 Mobile units

The additional service feature **POSA MU** (Mobile Units) may be assigned to mobile units with station keeping system complying with the applicable requirements of NR493.

A construction mark is to be added to these additional service features.

The requirements for the maintenance of these notations are given in Ch 2, Sec 9.

6.3 Inert gas systems (INERTGAS)

6.3.1 The additional service feature **INERTGAS** may be assigned to units fitted with an inerting system capable of preventing the combustion of flammable materials in cargo tanks, according to the conditions of assignation defined for the service notation in [5.2].

This notation is mandatory for oil storage units with a deadweight greater than 8000 tonnes.

The technical requirements for inert gas systems are provided in Part D, Chapter 1.

7 Site, transit and navigation notations

7.1 Site notation

7.1.1 Units covered by the present Rules are to be granted with a site notation, consisting in the name of field and/or geographical area and/or the most unfavourable sea conditions where the unit is intended to operate.

7.1.2 For surface units, as defined in Ch 1, Sec 1, [4.3.1], the site notation may be completed by one of the navigation notations given in [7.4]. This navigation notation is to cover only the site condition of the unit. In addition, the requirements of [7.3], are also to be complied with.

Example: **USANFLOR Offshore Angola - tropical zone**

7.1.3 In both cases, with or without navigation notation for site condition, the data, limitations and assumptions used for the assessment of the unit on site are stated in the Design Criteria Statement, which is referred to on a memorandum.

7.2 Transit notation

7.2.1 Units involved in towing or sailing by means of own propulsion system between construction shipyard and the intended site, or between different operation sites, are to be granted with the notation **transit**.

Note 1: Dry towing of offshore units is not covered by the notation **transit**.

7.2.2 The notation **transit**, as defined in [7.2.1], is to be completed as follows:

- **transit - specific criteria**, applicable for all types of unit, when the criteria for the assessment in towing/transit phase are based on data and assumptions specified by the party applying for classification. These criteria are to be stated in the Design Criteria Statement, which is referred to on a memorandum.
- For surface units, as defined in Ch 1, Sec 1, [4.3.1], the notation **transit** may be completed by one of the navigation notation given in [7.4]. In this case, the requirements of [5.3] are to be complied with.

  Example: **transit - unrestricted navigation**

7.3 Navigation notations

7.3.1 Navigation notations listed in [7.4] may complete the site notation and/or transit notation of the unit, as required in [7.1.2] and [7.2.2].

7.3.2 When surface units covered by Part D are intended to be granted a navigation notation, requirements of Pt D, Ch 1, Sec 5 are to be complied with.

7.3.3 The assignment of a navigation notation, including the reduction of scantlings or specific arrangements for restricted navigation notations, is subject to compliance with the requirements laid down in Part B, Part C and Part D of the Rules.

7.3.4 The assignment of a navigation notation does not absolve the Interested Party from compliance with any international and national regulations established by the Administrations for a unit operating in national waters, or a specific area, or a navigation zone. Neither does it waive the requirements in Ch 1, Sec 1, [3.3.1].

7.4 List of navigation notations

7.4.1 The navigation notation **unrestricted navigation** is assigned to units intended to operate in any area and any period of the year.

7.4.2 The navigation notation **summer zone** is assigned to units intended to operate only within the geographical limits as defined in ILLC 1966 for the Summer zones.

7.4.3 The navigation notation **tropical zone** is assigned to units intended to operate only within the geographical limits as defined in ILLC 1966 for the Tropical zones.

7.4.4 The navigation notation **coastal area** is assigned to units intended to operate only within 20 nautical miles from the shore and with a maximum sailing time of six hours from a port of refuge or safe sheltered anchorage.

7.4.5 The navigation notation **sheltered area** is assigned to units intended to operate in sheltered waters, i.e. harbours, estuaries, roadsteads, bays, lagoons and generally calm stretches of water and when the wind force does not exceed 6 Beaufort scale.

8 Additional class notations

8.1 General

8.1.1 An additional class notation expresses the classification of additional equipment or specific arrangement, which has been requested by the Interested Party. Some additional class notations may also be mandatory for certain unit types and services when specified in the present Rules.

8.1.2 The assignment of an additional class notation is subject to the compliance with the associated additional rule requirements.

8.1.3 Some additional class notations are assigned a construction mark, according to the principles given in [3.1.2]. This is indicated in the definition of the relevant additional class notations.

8.1.4 The different additional class notations which may be assigned to a unit are listed in [8.2] [8.4] and are summarized in Tab 3.

Table 3 : List of additional class notations

Additional class notation	Defined in	Reference for assignment	Remarks
ALM **(1)** **(ALM)** **(1)** **ALM-EN** **(1)** **ALM-SUBSEA** **(1)** **ALP** **(1)** **(ALP)** **(1)**	[8.3.1]	NR526	**ALP**, **ALM**, **ALM-EN** and **ALM-SUBSEA** may be completed by **-MR**
AUTO **(1)**	[8.3.14]	Part C, Chapter 3	mandatory for offshore units having offshore barge or offshore ship structural type notation with at least one of the following service notations: **oil storage**, **oil production unit**, **liquefied gas storage**, **gas production unit** or **gas liquefaction unit**
COMF HEALTH-NOISE-g **COMF HEALTH-VIB-g**	[8.4.3]	NR636	**g** is equal to **1** (best level) or **2** **COMF** notations may be completed by **-SIS**
CSR Hull Type	[8.4.3]	NR606	for oil storage unit verified at design with the requirement of NR606
DRILL	[8.3.9]	NR570	for floating units with service notation **drilling**
DYNAPOS SAM **(1)** **DYNAPOS AM** **(1)** **DYNAPOS AT** **(1)** **DYNAPOS AM/AT** **(1)**	[8.3.2]	Pt F, Ch 11, Sec 5 of the Ship Rules	**DYNAPOS AM** and **DYNAPOS AT** may be completed y **R** or **RS**. **DYNAPOS AM/AT** may be completed by **R** or **RS** or **(xx;xx)** (corresponding to the two-number vector for the Environmental Station Keeping Index ESKI) **DYNAPOS** notations may be completed by **-HWIL** **DYNAPOS AM/AT-R** or **DYNAPOS AM/AT-RS** may be completed by **-EI**
(1) A construction mark is added to the additional class notation. **(2)** For units contracted before 1 July 2016 the notation **DFL xx years** may have been assigned in lieu of **FAT xx years**.			

Additional class notation	Defined in	Reference for assignment	Remarks
ERS-H **ERS-M** **ERS-S** **[ERS-H]** **[ERS-M]** **[ERS-S]**	[8.3.15]	NR556	
ETA	[8.3.6]	Pt B, Ch 12, Sec 4 of the Ship Rules	
GREEN PASSPORT, **GREEN PASSPORT EU**	[8.4.12]	NR528	**GREEN PASSPORT** is mandatory in case **SUSTAINABILITY-1** or **SUSTAINABILITY-2** is to be assigned
HEL **(1)**	[8.3.7]	Pt B, Ch 3, Sec 4, [4]	
HIPS	[8.4.6]	NI524	
ICE	[8.4.1]	Pt F, Ch 8, Sec 1, Pt F, Ch 8, Sec 2 and Pt F, Ch 8, Sec 3 of the Ship Rules	
ICE CLASS IA SUPER **ICE CLASS IA** **ICE CLASS IB** **ICE CLASS IC** **ICE CLASS ID**			
INTERNAL CONNECTIVITY	[8.4.11]	NR688	
INWATERSURVEY	[8.4.9]	Pt F, Ch 15, Sec 3 of the Ship Rules	mandatory for permanent units
IVBS-xxx	[8.4.7]	NI567	**xxx** is the reference of the concerned regulation, standard or Owner specification. Ex: **IVBS-UK**, **IVBS-BRA, IVBS-AUS**
liquefied gas transfer	[8.3.8]	NR542	for side-by-side transfer arms, tandem transfer arms or transfer systems based on flexible hoses
LSA	[8.3.5]	Pt C, Ch 4, Sec 12	
MON-SHAFT	[8.3.16]	Pt F, Ch 5, Sec 2 of the Ship Rules	
OAS **(1)**	[8.3.12]	NI629	
OHS **(1)**	[8.3.11]	NR595	
oil offloading (transfer arms)	[8.3.10]	NR588	for side-by-side or tandem transfer arms
PROC	[8.3.3]	NR459	for permanent units with service notation **oil production unit**
PROC-GL	[8.3.3]	NR542	for permanent units with service notation **gas liquefaction unit**
PROC-GP	[8.3.3]	NR542	for permanent units with service notation **gas production unit**
RBA **RBA ( )**	[8.4.8]	NR568	when the risk based approach concerns a part of the unit only, this part is to be indicated between brackets. Ex: **RBA (offloading system)**
RBVS-xxx	[8.4.5]	NI567	**xxx** is the reference of the concerned regulation, standard or Owner specification
REGAS	[8.3.13]	NR645	
RIPRO	[8.3.4]	Pt D, Ch 1, Sec 20	only for permanent surface units intended for oil storage and/or production and fitted with risers
Spectral Fatigue ( )	[8.4.4]	NI611	the information between brackets is a short description of routes and/or areas considered for the spectral fatigue analysis

(1) A construction mark is added to the additional class notation.
(2) For units contracted before 1 July 2016 the notation **DFL xx years** may have been assigned in lieu of **FAT xx years**.

Additional class notation	Defined in	Reference for assignment	Remarks
STAR-CARGO	[8.2.5]	Pt F, Ch 1, Sec 4 of the Ship Rules	
STAR-MACH **STAR-MACH SIS**	[8.2.4]	Pt F, Ch 1, Sec 2 of the Ship Rules	
STAR-REGAS	[8.2.6]	Pt F, Ch 1, Sec 3 of the Ship Rules	
STI	[8.4.2]	Pt D, Ch 1, Sec 3, [8]	only for surface units intended for oil storage and/or production
SUSTAINABILITY-1 **SUSTAINABILITY-2**	[8.4.13]	Part C, Chapter 5	
VeriSTAR-Hull **(1)**	[8.2.2]	Pt D, Ch 1, Sec 9 NR542	these notations may be complemented by **FAT** or **FAT xx years**, with ≤ 25 xx ≤ 40 **(2)** or by **FAT [YY, YEAR]** with YY ≥ 5 mandatory for offshore units having offshore barge or offshore ship structural type notation with at least one of the following service notations: **oil storage**, and/or **oil production unit**, **liquefied gas storage**, **gas production unit** or **gas liquefaction unit**
VeriSTAR-Hull FLM	[8.2.3]	NR551	for surface units only

(1) A construction mark is added to the additional class notation.
(2) For units contracted before 1 July 2016 the notation **DFL xx years** may have been assigned in lieu of **FAT xx years**.

8.2 VeriSTAR and STAR notations

8.2.1 General

VeriSTAR and **STAR** notations integrate rational analysis at design stage or after construction and possibly with data and records from unit-in-service concerning planned inspection and maintenance.

8.2.2 VeriSTAR-Hull

The additional class notation **VeriSTAR-Hull** is mandatory and is to be assigned to surface units, when the structural assessment of the unit (the hull structure and its interfaces with offshore structures) is performed through partial 3D finite element model, complying with the requirements of Pt D, Ch 1, Sec 9 or equivalent.

This notation is assigned a construction mark.

The additional class notation **VeriSTAR-Hull** may be completed by **FAT [XX]**, with XX having values between 25 and 40, when the fatigue assessment carried out according to Pt D, Ch 1, Sec 10 shows that the evaluated design fatigue life of selected structural details is not less than xx years.

For conversion, redeployment or life extension the additional class notation **VeriSTAR-Hull** will be completed by **FAT [YY, YEAR]** with YY having value equal or greater than 5, when the fatigue assessment carried out according to Pt D, Ch 1, Sec 10 shows that the evaluated design fatigue life of selected structural details is not less than YY years and YEAR being the year of conversion or redeployment, or life extension. Fatigue analysis will include all previous phases of the unit as applicable.

Note 1: In case of conversion of a surface unit, when no structural assessment is performed through partial 3D finite element model as allowed by NI593, the notation **VeriSTAR-Hul**l is not to be assigned.

Note 2: By default, the design fatigue life is considered 20 years from the date of build.

Note 3: For converted units with existing documented structural assessment, exemptions from structural assessment may be allowed according to NI593 and by default the design life is considered 20 years from the date of build unless otherwise documented.

8.2.3 Full length finite element model (VeriSTAR-Hull FLM)

The additional class notation **VeriSTAR-Hull FLM** may be assigned only to surface units, as defined in Ch 1, Sec 1, [4.3.1], when the structural assessment of the unit is performed through full length 3D finite element models, complying with the requirements of NR551 Structural Analysis of Offshore Surface Units through Full Length Finite Element Models.

8.2.4 STAR-MACH and STAR-MACH SIS

The additional class notations **STAR-MACH** and **STAR-MACH SIS** may be assigned to units for which a risk analysis has been performed for propulsion and steering installations (if any) and marine auxiliary systems (machinery, electrical) in order to support and validate the Maintenance Plan in the operating context.

They may be granted to units complying with the relevant requirements of Pt F, Ch 1, Sec 2 of the Ship Rules, as follows:

- **STAR-MACH SIS**, for units on which a Planned Maintenance Survey System (PMS), as defined in Ch 2, Sec 1, [4.4], is implemented.
- **STAR-MACH**, for the other units.

The requirements for the maintenance of the notation **STAR-MACH SIS** are given in Pt A, Ch 5, Sec 2 of the Ship Rules.

8.2.5 STAR-CARGO

The additional class notation **STAR-CARGO** may be assigned to units for which a risk analysis has been performed for the cargo handling installation and its associated marine systems, in order to support and validate the maintenance plan in the operating context.

The requirements for the assignment of this notation are given in Pt F, Ch 1, Sec 4 of the Ship Rules.

8.2.6 STAR-REGAS

The additional class notation **STAR-REGAS** may be assigned to units having the additional class notation **REGAS** and for which a risk analysis has been performed for the regasification installation and its associated systems, in order to support and validate the maintenance plan in the operating context.

The requirements for the assignment of this notation are given in Pt F, Ch 1, Sec 3 of the Ship Rules.

8.3 Equipment and facilities

8.3.1 Lifting appliances

Offshore units fitted with lifting appliances meeting the requirements of the NR526 Rules for the Certification of Lifting Appliances onboard Ships and Offshore Units may be assigned the following additional class notations:

- **ALP** for appliances intended to be used in harbour or in similar conditions,
- **ALM** for appliances intended to be used in offshore conditions for various lifting operations exclusive of the appliances mentioned in item a).

The additional class notations **(ALP)** or **(ALM)** may be assigned by the Society in lieu of the notations **ALP** or **ALM** respectively, when the corresponding lifting appliances meet the requirements of specific National Regulations under the conditions defined in NR526.

The additional class notation **ALM** may be completed by:

- **-EN**, when lifting appliances are in compliance with additional specific safety requirements as defined in NR526
- **-SUBSEA**, when lifting appliances are intended to be used for lifting of subsea equipment in compliance with specific requirements as defined in NR526.

The additional class notations **ALP**, **ALM**, **ALM-EN** and **ALM-SUBSEA** may be completed by **-MR** when, in addition, lifting appliances are intended to be used for lifting of personnel and comply with the specific requirements of NR526.

The additional class notations **ALP**, **ALM**, **(ALP)**, **(ALM)**, **ALM-EN** or **ALM-SUBSEA** are optional. However, the Society may require the compliance of lifting appliances with the assigning conditions of one of the above mentioned additional class notations for the classification of offshore units, when one or several lifting appliances are of a primary importance for their operation, or when such appliances significantly influence their structure. As a rule, such is the case for crane vessels fitted with lifting appliances with special high capacities.

In compliance with [8.1.3], these notations are assigned a construction mark as defined in [3].

The requirements for assignment and maintenance of these notations are given in NR526.

8.3.2 Dynamic positioning (DYNAPOS)

The additional class notation **DYNAPOS** may be assigned to units equipped with a dynamic station keeping system.

In accordance with [8.1.3], this notation is assigned a construction mark, as defined in [3].

The scope of the additional class notation **DYNAPOS**, including the additional notations for the description of capability of the installation (**SAM**, **AM**, **AT**, **AM/AT**), and the requirements for the assignment of this notation are given in Pt F, Ch 11, Sec 5 of the Ship Rules.

The requirements for the maintenance of this notation are given in Pt A, Ch 5, Sec 10 of the Ship Rules.

The additional class notation **DYNAPOS AM/AT R** or **DYNAPOS AM/AT RS** may be completed by **-EI** for units fitted with enhanced dynamic positioning control system and complying with the requirements of Pt F, Ch 11, Sec 5 of the Ship Rules. This notation allows improving the reliability, availability and operability of a DP vessel.

The notation **-HWIL** is added to the additional class notation **DYNAPOS** when the control system has been verified according to the requirements of NR632 Hardware-in-the-loop Testing.

8.3.3 Process (PROC)

The additional class notation **PROC**, **PROC-GP** or **PROC-GL** may be assigned to units fitted with, respectively, oil production, gas production or gas liquefaction installations meeting the corresponding requirements of the Rule Note NR459 Process Systems on board Offshore Units and Installations (**PROC**) and of the Rule Note NR542 Classification of Floating Gas Units (**PROC-GP** and **PROC-GL**).

Note 1: The additional class notations **PROC**, **PROC-GP** and **PROC-GL** are strongly recommended for permanent units fitted with oil production, gas production or gas liquefaction installations, so as to allow a global approach of unit's safety.

8.3.4 Risers (RIPRO)

The additional class notation **RIPRO** may be assigned to permanent units fitted with risers meeting the corresponding requirements of Pt D, Ch 1, Sec 20.

Note 1: The additional class notation RIPRO is strongly recommended for permanent units fitted with risers.

8.3.5 Life saving appliances (LSA)

The additional class notation **LSA** may be assigned to units the life-saving equipment of which complies with the applicable provisions of Pt C, Ch 4, Sec 12.

Note 1: It is reminded that, except if **LSA** additional class notation is to be granted, life-saving appliances are out of the scope of classification.

8.3.6 Emergency towing arrangement (ETA)

The additional class notation **ETA** may be assigned to units fitted with an emergency towing arrangement.

The requirements for the assignment of this notation are given in Pt B, Ch 12, Sec 4 of the Ship Rules.

8.3.7 Helideck (HEL)

The additional class notation **HEL** may be assigned to units complying with chapter 13 of MODU Code and Civil Aviation Publication (CAP) 437 when they are fitted with helicopter facilities subject to design review and construction and installation survey by the Society.

This notation is assigned a construction mark.

The requirements for the assignment and maintenance of this notation are given respectively in Pt B, Ch 3, Sec 4, [4] and. Ch 2, Sec 9, [10]

8.3.8 Liquefied gas transfer

The additional class notation **liquefied gas transfer** may be assigned to units having a liquefied gas transfer system fitted on-board, complying with the requirements of NR542 Rules for the Classification of Floating Gas Units. This additional class notation covers the following types of transfer systems:

- side-by-side transfer arms
- tandem transfer arms
- transfer systems based on flexible hoses.

8.3.9 Drilling systems (DRILL)

The additional class notation **DRILL** may be assigned to floating offshore units fitted with drilling systems and associated equipment.

The requirements for the assignment of these notations are given in NR570 Classification of Drilling Equipment.

Note 1: The additional class notation **DRILL** although optional is strongly recommended for all types of offshore rig, so as to allow a global approach of unit's safety.

8.3.10 Oil offloading (transfer arms)

The additional class notation **oil offloading (transfer arms)** may be assigned to units having a transfer system for oil products, using transfer arms, and complying with the requirements of NR588 Offshore Oil Offloading - Transfer Arms.

This additional class notations covers the following types of transfer systems:

- side-by-side transfer arms
- tandem transfer arms.

8.3.11 Offshore handling systems (OHS)

The additional class notation **OHS** may be assigned to units having offshore handling systems such as winches, strand jacks, chain jacks, sheaves and their foundations used for lifting/pulling of loads.

This notation is assigned a construction mark.

The requirements for the assignment and maintenance of this notation are given in, respectively, NR595 Classification of Offshore Handling Systems and Ch 2, Sec 9.

8.3.12 Offshore access system (OAS)

The additional class notation **OAS** may be assigned to units having an Offshore Access System such as a motion compensated gangway used for personnel transfer from a mobile unit to an offshore facility or to an other mobile unit.

This notation is assigned a construction mark.

The requirements for the assignment and maintenance of this notation are given in, respectively, NI629 Offshore Access Systems and Ch 2, Sec 9.

8.3.13 Regasification installations (REGAS)

The additional class notation **REGAS** may be assigned to units fitted with regasification plant and complying with the relevant requirements of NR645 Rules for the Classification of Floating Storage Regasification Units and Floating Storage Units

8.3.14 Automation systems (AUTO)

The additional class notation **AUTO** may be assigned to units the control and safety systems of which comply with the applicable requirements of Part C, Chapter 3.

This notation is assigned a construction mark.

8.3.15 Emergency response service {ERS-S (Strength), ERS-H (Hydrodynamic), ERS-M (Mooring), [ERS-S] (Strength-partial), [ERS-H] (Hydrodynamic-partial) and [ERS-M] (Mooring-partial) services}

The additional class notations dealt with under this requirement may be assigned to units where there is a provision of technical assistance in case of a maritime accident at sea by providing information on their remain in strength and stability in the resulting damaged condition.

The requirements for the assignment and maintenance of these notations are given in NR556, Emergency Response Service.

ERS-S corresponds to damage longitudinal strength and damage stability analyses. It aims at providing information on the remaining hull strength and stability after the accident.

ERS-H aims at providing limits of navigation, based on direct calculations of vertical wave bending moment and vertical wave shear force for the accidental site sea-states, instead of empirical rule formulae. It is only applied in complement to ERS-S. It aims at providing maximum environmental conditions (Hs), heading restriction, or speed limit. These limits of navigation are given for hull girder strength only.

ERS-M corresponds to damaged mooring analyses for permanently moored units. It aims at providing information on the remaining capacities of the mooring system after the failure of one or several mooring lines and the potential failure of an additional mooring line.

[ERS-S], **[ERS-H]** and **[ERS-M]** are assigned to units until the respective ERS service becomes fully effective. The Society will provide service in case of damage as far as possible depending on the available information.

Note 1: The notations **[ERS-S]**, **[ERS-H]** and **[ERS-M]** are replaced respectively by **ERS-S**, **ERS-H** and **ERS-M** when all necessary information has been made available to the Society allowing the service to become fully effective.

8.3.16 Propeller shaft monitoring system (MON-SHAFT)

The additional class notation MON-SHAFT is assigned to offshore units fitted with oil or water lubricated systems for propeller shaft bearings.

The assignment of this notation allows the offshore units to be granted a reduced scope for complete propeller surveys, see Pt A, Ch 2, Sec 2, [5.5.3] of the Ship Rules and Pt A, Ch 5, Sec 6, [3] of the Ship Rules.

The requirements for the assignment and maintenance of this notation are given respectively in Pt F, Ch 5, Sec 2 of the Ship Rules and in Pt A, Ch 5, Sec 6 of the Ship Rules.

Note 1: The propeller shaft is named tailshaft in the Ship Rules.

8.4 Other additional class notations

8.4.1 Operation in ice (ICE)

- The additional class notations **ICE CLASS IA SUPER**, **ICE CLASS IA**, **ICE CLASS IB**, **ICE CLASS IC** and **ICE CLASS ID** may be assigned to units that comply with the specific requirements detailed in Pt F, Ch 8, Sec 1, Sec 2 and Sec 3 of the Ship Rules.
- The additional class notation **ICE** may be assigned to units whose reinforcements for navigation in ice are similar but not equivalent to those required for the assignment of one of the notation defined above, when this has been specially considered by the Society.

The survey requirements are given in Pt A, Ch 5, Sec 10 of the Ship Rules.

8.4.2 Specific thickness increment (STI)

The additional class notation **STI** may be assigned to units with thickness increments determined in accordance with the Interested Party.

The requirements for the assignment of this notation are given in Pt D, Ch 1, Sec 3, [8].

8.4.3 Comfort and health on board (COMF)

The notations dealt with under this heading are relevant to the assessment of comfort on board floating units with regard to:

- the level of noise - **COMF HEALTH-NOISE- g**
- the level of vibration - **COMF HEALTH-VIB- g**

with g = **1** or **2**, **1** corresponding to the best level.

The parameters which are taken into consideration for the evaluation of the comfort and health such as the level of noise, and the level of vibration are to be indicated in the relevant memorandum.

As an initial approach, the requirements in NR636 are to be considered for the floating unit. The Society is to take into consideration criteria upon the final evaluation of the unit – and based on Owner requirements.

For offshore units intended with in-service assessment, the notations **COMF** are followed by notation **-SIS**. The requirements for the maintenance of these notations are given in Ch 2, Sec 9, [6].

8.4.4 Spectral fatigue

The Guidance Note NI611 Guidelines for Fatigue Assessment of Steel Ships and Offshore Units is to be used.

The information between brackets is a short description of routes and areas considered for this spectral fatigue analysis.

Example:

Spectral Fatigue (North Atlantic)

The guidance note NI611 Guidelines for Fatigue Assessment of Steel Ships and Offshore Units is applicable.

Other methodology may be used subject to approval by the Society.

8.4.5 Risk based verification services (RBVS-xxx)

The additional class notation **RBVS-xxx** may be assigned to units for which the Society provides risk based verification services.

The requirements for the assignment of these notations are given in NI567 Risk Based Verification of Offshore Units.

8.4.6 High integrity protection system (HIPS)

The additional class notation **HIPS** may be assigned to units equipped with a high integrity protection system based on the provisions of NI524 High Integrity Protection System.

8.4.7 Independent verification services (IVBS-xxx)

The additional class notation **IVBS-xxx** may be assigned to units for which the Society provides independent verification services, acting as Independent Verification Body (IVB).

xxx is the reference of the concerned regulation, standard or Owner specification.

Ex: **IVBS-UK**, **IVBS-BRA**, **IVBS-AUS**, **IVBS-EN**

The requirements for the assignment of these notations are given in NI 567 Risk Based Verification of Offshore Units.

8.4.8 Risk based approach (RBA)

The additional class notation **RBA** may be assigned to Units for which the classification process is carried out through a risk analysis approach.

The requirements for the assignment of these notations are given in NR568 Classification of Offshore Units - Risk Based Approach.

Note 1: When the classification based on risk analysis approach covers only a part of the offshore units, the additional class notation **RBA** is to be completed with a feature describing the concerned part of the unit, installation or equipment, between brackets.

Example: **RBA (offloading system)**

8.4.9 In-water survey (INWATERSURVEY)

The additional class notation **INWATERSURVEY** may be assigned to units provided with suitable arrangements to facilitate the in-water surveys.

The requirements for the assignment and maintenance of this notation are given respectively in Pt F, Ch 15, Sec 3 of the Ship Rules and in Ch 2, Sec 8.

8.4.10 Common structural rules designed offshore unit (CSR Hull type)

The additional class notation **CSR Hull type** may be assigned to oil storage units arranged with double hull and double bottom and for which the hull has been designed taking into account the requirements of NR606 Common Structural Rules for Bulk Carriers and Oil Tankers, as far as practicable.

8.4.11 INTERNAL CONNECTIVITY

The additional class notation **INTERNAL CONNECTIVITY** may be assigned to offshore units for which the on-board network infrastructure enables an internal connectivity using a VSAT subscription.

The requirements for the assignment and the maintenance of this notation are given in the Rule Note NR688 Internal Connectivity.

The scope of additional class notation **INTERNAL CONNECTIVITY** is limited to the list of Internal Connectivity Areas (ICAs) specified by the applicant.

This list of Internal Connectivity Areas (ICAs), along with Class items covered, if applicable, is to be referred to in a memorandum on a Classification Certificate.

8.4.12 Green passport

The additional class notations **GREEN PASSPORT** or **GREEN PASSPORT EU** may be assigned to units for which requirements intended to facilitate ship recycling have been applied, encompassing the identification, quantification and localization of materials which may cause harm to the environment and people when the fittings or equipment containing such materials are removed, or when the unit is recycled, as detailed hereafter.

GREEN PASSPORT may be assigned to units for which such requirements have been applied in accordance with:

- the Hong Kong International Convention for the Safe and Environmentally Sound Recycling of Ships, 2009, and
- the European Regulation Reg (EU) N°1257/2013 on Ship Recycling, as amended, as applicable to ships flying the Flag of a non-EU member State.

GREEN PASSPORT EU may be assigned to units for which such requirements have been applied in accordance with:

- the Hong Kong International Convention for the Safe and Environmentally Sound Recycling of Ships, 2009, and
- the European Regulation Reg (EU) N°1257/2013 on Ship Recycling as applicable to units flying the Flag of an EU member State.

The requirements for the assignment and maintenance of this notation are given in NR528 Green Passport.

The additional class notation **GREEN PASSPORT** is mandatory if the unit is to be assigned the **SUSTAINABILITY-1** or **SUSTAINABILITY-2** additional class notation.

8.4.13 Sustainability

The additional class notations **SUSTAINABLILITY-1** or **SUSTAINABILITY-2** may be assigned to units that are designed, built and equipped according to the requirements of Part C, Chapter 5, focusing on the following sustainability aspects:

- prevention of sea and air pollution
- protection of the marine environment
- reduction of greenhouse gases emissions
- preparation for unit recycling
- enhancement of people well-being on board.

The requirements for the assignment of the additional class notations **SUSTAINABLILITY-1** and **SUSTAINABILITY-2** are given in Part C, Chapter 5.

The requirements for the maintenance of these additional class notations are given in Ch 2, Sec 9, [12].

9 Other class notations

9.1 General

9.1.1 On request of the Interested Party, the Society may assign, in addition to those mentioned in the present Section, additional class notations as defined in Part A of the Ship Rules when the unit meets the requirements of these Rules or of Guidance Notes to which it is referred.

9.1.2 The Society may also define other notations by means of provisional requirements and guidelines, which may then be published in the form of tentative rules.

Section 3 Assignment of Class

1 General

1.1

1.1.1 Class is assigned to a unit upon a survey, with the associated operations, which is held in order to verify whether it is eligible to be classed on the basis of the Rules of the Society (see Ch 1, Sec 1, [1.3.2]). This may be achieved through:

- the completion of the new building, during which a survey has been performed
- a survey carried out according to the agreement developed by the IACS Member Societies when units change class between members, or
- a specific admission to class survey, in cases where a unit is classed with a non-IACS Society or is not classed at all.

2 New building procedure

2.1 Units surveyed by the Society during construction

2.1.1 When a unit is surveyed by the Society during construction, it is to comply with those requirements of the Rules which are in force and applicable depending on the class of the ship, taking into account the provisions of Ch 1, Sec 1, [2.2] and Ch 1, Sec 1, [2.3].

2.1.2 The Society:

- approves the plans and documentation submitted as required by the Rules
- proceeds, if required, with the appraisal of the design of materials and equipment used in the construction of the unit and their inspection at works
- carries out surveys or obtains appropriate evidence to satisfy itself that the scantlings and construction meet the rule requirements in relation to the approved drawings
- attends tests and trials provided for in the Rules
- assigns the construction mark {; refer to Ch 1, Sec 2, [3.1.2].

2.1.3 The Society defines in specific Rules which materials and equipment used for the construction of units built under survey are, as a rule, subject to appraisal of their design and to inspection at works, and according to which particulars.

2.1.4 As part of his interventions during the ship's construction, the Surveyor will:

- conduct an overall examination of the parts of the unit covered by the Rules
- examine the construction methods and procedures when required by the Rules
- check selected items covered by the rule requirements
- attend tests and trials where applicable and deemed necessary.

Note 1: The Society's surveys cannot be considered as a substitute for the construction control which remains the responsibility of the Builder, nor for the unit's acceptance which remains the responsibility of the Owner.

2.1.5 Use of materials, machinery, appliances and items

As a general rule, all materials, machinery, boilers, auxiliary installations, equipment, items etc. (generally referred to as "products") which are covered by the class and used or fitted on board units surveyed by the Society during construction are to be new and, where intended for essential services as defined in Ch 1, Sec 1, [1.2.1], tested by the Society.

Second hand materials, machinery, appliances and items may be used subject to the specific agreement of the Society and the Owner.

The requirements for the selection of materials to be used in the construction of the various parts of a unit, the characteristics of products to be used for such parts and the checks required for their acceptance are to be as stated in Part C and in NR216, as applicable, or in other Parts of the Rules or as specified on approved plans. In particular, the testing of products manufactured according to quality assurance procedures approved by the Society and the approval of such procedures are governed by the requirements of NR216.

2.1.6 Defects or deficiencies and their repair

The Society may, at any time, reject items found to be defective or contrary to rule requirements or require supplementary inspections and tests and/or modifications, notwithstanding any previous certificates issued.

All repairs are subject to the preliminary agreement of the Society. When the limits of tolerance for defects are specified in the Rules concerned or by the Manufacturer, they are to be taken into account for repairs.

It is incumbent upon the Interested Party to notify the Society of any defects noted during the construction of the unit and/or of any item not complying with the applicable requirements or in any case unsatisfactory. Proposals regarding remedial actions intended to be adopted to eliminate such defects or unsatisfactory items are to be submitted to the Society and, if accepted, carried out to the Surveyor's satisfaction.

2.1.7 Equivalence of Rule testing under certain conditions

Notwithstanding the provisions of [2.1.5], the Society may, at its discretion and subject to conditions and checks deemed appropriate, accept certain materials, appliances or machinery which have not been subjected to rule testing.

2.2 Other cases

2.2.1 When the procedure adopted does not comply with that detailed in [2.1] but the Society deems that it is acceptable for the assignment of class, the construction mark μ is assigned in accordance with Ch 1, Sec 2, [3.2.3].

2.3 Documentation

2.3.1 Documentation relevant to the Class applied for is to be submitted for the approval of the Society.

2.3.2 The minimum required documentation to be submitted for new built units is listed in Ch 1, Sec 4, [2].

2.3.3 The documentation submitted to the Society is examined in relation to the class applied for in the request for classification.

Note 1: Should the Interested Party subsequently wish to have the class, in particular the service notation or design data contained in the design criteria statement modified, plans and drawings are generally to be re-examined.

2.3.4 A copy of the submitted plans will be returned duly stamped, with remarks related to the compliance with the rule requirements should the need arise.

2.3.5 As a rule, modifications of the approved plans regarding items covered by classification are to be submitted.

2.3.6 Design data to be submitted to the Society are to incorporate all information necessary for the assessment of the design of the unit for the purpose of assignment of class. It is the responsibility of the Interested Party to ascertain that the design data are correct, complete and compatible with the use of the unit.

2.3.7 Design calculations are to be provided, when called for, as supporting documents to the submitted plans.

2.3.8 Design data and calculations are to be adequately referenced. It is the duty of the Interested Party to ascertain that the references used are correct, complete and applicable to the design of the unit.

2.3.9 The submitted plans are to contain all necessary information for checking the compliance with the requirements of the Rules.

2.3.10 In the case of conflicting information, submitted documentation will be considered in the following order of precedence: design data, plans, design calculations.

2.3.11 It is the responsibility of the Interested Party to ascertain that drawings used for the procurement, construction and other works are in accordance with the approved plans.

2.3.12 Upon specific agreement between the Society and the Interested Parties, tri-dimensional models may be submitted in place of two-dimensional plans. In this case, the Society may require that additional documentation containing information that cannot be specified in tri-dimensional models be submitted.

2.4 Construction portfolio

2.4.1 For units built in compliance with the construction mark { requirements, a construction portfolio, including items listed in [2.4.2], is to be prepared and a copy placed on board the unit.

For units not built in compliance with the construction mark { requirements, it is recommended that a construction portfolio, as complete as possible, be prepared and a copy placed on board the unit.

2.4.2 The portfolio is to include the following items:

- quality control plans
- reviewed drawings relating to the structure of the unit showing the location and extent of application of different grades and strengths of materials (material list)
- fabrication procedures and qualifications (welding, forming, heat treatment, etc.)
- testing procedures (NDT, pressure testing, functional testing, etc.)
- personnel qualifications (welders, NDT operators)
- material certificates
- test certificates
- as-built drawings.

2.4.3 Restrictions or prohibitions, as applicable, regarding alterations or repairs in connection with [2.4.2] are to be included in the portfolio.

2.4.4 The construction portfolio is to be submitted to the review of the Surveyor attending the construction of the unit for review of the items specified in [2.4.2].

3 Units classed after construction

3.1 General

3.1.1 When an Owner applies to the Society for an unit already in service to be admitted to class, the application will be processed differently depending on whether the unit is:

- classed with an IACS Society
- not classed with an IACS Society.

3.2 Surveys and documentation

3.2.1 Surveys

A programme of surveys, appropriate to the age and condition of the unit, is determined by the Society, on the basis of the requirements of Ship Rules, Pt A, Ch 2, Sec 1, [3].

Note 1: Reference is made to Ch 2, Sec 1, [4.1.7]

3.2.2 Documentation

The minimum required documentation to be submitted for units classed after construction is listed in Ch 1, Sec 4, [3].

4 Date of initial classification

4.1 Definitions

4.1.1 Date of build

For a new building the date of build is the year and month at which the new construction survey process is completed. Where there is a substantial delay between the completion of the construction survey process and the unit commencing active service, the date of commissioning may be also specified.

If modifications are carried out, the date of build remains assigned to the unit. Where a complete replacement or addition of a major portion of the unit (e.g. forward section, after section, main cargo section) is involved, the following applies:

- the date of build associated with each major portion of the unit is indicated on the Classification Certificate
- survey requirements are based on the date of build associated with each major portion of the unit.

For permanent offshore units, the initial classification usually starts at the date of mooring commissioning and/or process facility commissioning when the additional class notation **PROC** is granted.

4.1.2 Date of initial classification for new buildings

As a general rule, for new buildings the date of initial classification coincides with the date of build.

4.1.3 Date of initial classification for existing units

In principle, for existing units the date of initial classification is the date of completion of the admission to class survey.

5 Reassignment of class

5.1

5.1.1 At the request of the Owner, a unit which was previously classed with the Society, subsequently withdrawn from class and has not been classed since may have the class reassigned subject to an admission to class survey. If applicable and appropriate, account may be taken of any periodical surveys held in the former period of class with the Society.

Section 4 Required Documentation

1 General

1.1 Principle

1.1.1 The documentation listed in the present Section is to be considered as a minimum, to be completed in compliance with the particular requirements of the other chapters, accounting for the unit's service(s), structural type and contemplated additional class notations.

1.1.2 The lists of requested plans, documents and other items related to Classification are not exhaustive and are intended as guidance for specifying the set of information to be submitted, rather than lists of actual titles.

The Society may require that additional information be submitted if deemed necessary for the verification of rule requirements, especially in the case of non-conventional design.

1.2 Time of submission

1.2.1 The required plans, drawings and documentation are to be submitted to the Society by the party applying for classification, as early as possible, unless otherwise agreed upon.

1.3 Contents of documentation

1.3.1 The submitted plans and drawings are to clearly show all essential features, arrangements and scantlings of the structure, machinery, boilers, auxiliaries and other equipment covered by the classification.

In addition to the above, drawings and documents may also be required for assigning the requested additional class notations or special notations.

2 New built units

2.1 Design data

2.1.1 Structural data

The following design data are to be submitted for information and plan review purposes:

- Environmental including:
  - metocean data, applicable to each mode of operation
  - soil conditions
  - minimum atmospheric and sea water temperatures and ice formation if applicable.

  The data are to be as comprehensive as possible and are to give clearly evidence of all applicable environmental restrictions.
- For permanent units, background data to the above, such as metocean investigation reports, soil investigation reports, and other relevant documentation, are to be also provided.
- Distributions of fixed and variable loads for each mode of operation.
- Maximum loading for all decks areas.
- Necessary data relevant to corrosion protection.
- Results of model basin tests, when performed.
- Results of wind tunnel tests, when performed.
- For helidecks, data of the heaviest helicopter intended to be used (see Pt B, Ch 2, Sec 3, [2.4]).
- For equipment liable to induce, when in use, significant loads within the structure of the unit, all information on these loads (refer to Part B, Chapter 2), such as:
  - drilling loads
  - crane loads on pedestal and on boom and hook rests (lifting)
  - stinger and tensioner loads (pipe laying)
  - other loads from lifting and handling equipment.

2.1.2 Power consumers

The list of essential and emergency power consumers of all types is to be submitted together with the complete indications of the required power supplies associated to different operational configurations.

2.2 Design calculations

2.2.1 Structural calculations

The following design calculations are to be provided as supporting documents to the submitted plans and drawings:

- calculations of environmental loadings to include forces and moments from wind, waves, currents, ice, snow, earthquakes as applicable
- calculations of the unit's resistance against overturning while resting on the sea bed, if applicable
- calculations of unit motions, where applicable
- calculations of loads induced by equipment (refer to [2.1.1])
- overall strength calculations
- local strength calculations
- jacking systems calculations, where applicable
- mooring and anchoring calculations, as applicable
- calculations of cathodic protection system.

2.2.2 Stability calculations

The following design calculations are to be provided as supporting documents to the submitted plans and drawings:

- cross curves of stability or equivalent
- wind heeling moment curves or equivalent data
- ice accretion effects, when relevant
- stability calculations for the intact and damaged conditions.

2.2.3 Piping calculations

The following design calculations are to be provided as supporting documents to the submitted plans and drawings:

- piping and pressure vessels strength calculations, in particular for calculation of steam pipes and other pressure piping
- fire water demand and fire pump capacity calculations.

2.2.4 Electrical calculations

Electrical design calculations are to be provided as supporting documents to the submitted plans and drawings, including:

- electrical balance, estimated for the different conditions of operation of unit (refer to Ch 1, Sec 1, [1.6.4])
- justification of sizes of conductors (temperature rises and voltage drops)
- for installations where the total rated current of generators arranged to run in parallel is above 1000 A, estimation of the prospective short-circuit currents
- where the main bus-bar maximum symmetrical short-circuit current is expected to exceed 50 kA, justification of the bus-bar and bracket strength related to the induced electromagnetic forces.

2.2.5 Additional class notations

Additional calculations as may be called for concerning the assignment of additional class notations are to be also provided.

2.3 Plans and drawings

2.3.1 General drawings

The following general drawings are to be submitted:

- general arrangement plan
- lines drawings (body plan) and offset table of frames, together with plotting of fore and aft axial longitudinal curves
- capacity plan indicating the volumes, overflows and the positions of the centres of gravity of the various compartments together with their locations
- tank sounding tables
- distribution, actual or estimated, of the unit's lightweight
- deck loading plans.

2.3.2 Structural drawings

The following structural plans are to be submitted:

- Main structural drawings showing structural arrangements, scantlings, grades of steel, welded connections. These drawings are to include, as applicable: transverse and longitudinal sections, decks including helicopter deck; shell plating and framing; bulkheads and flats; legs; columns, bracings and floaters; hull, footings and mats; superstructures and deck houses.
- Detailed structural drawings in the areas of connections between main structural members (for instance, connections between bracings, bracing and column, column and floater, column and deck in column stabilized units), in way of foundations of jacking systems for self-elevating units, drilling derrick, anchoring equipment, crane foundations and of all other parts liable to be subject to high local loadings or stress concentrations.

- Test plan of compartments intended for liquids.
- Arrangements and details of watertight doors and other closing appliances; arrangement and details of all openings and means of closure including locations of overflow and air pipes.
- Drawings showing corrosion control arrangements.

2.3.3 Machinery and piping systems

The following machinery and piping drawings are to be submitted:

a) General:
- general arrangement showing particularly location of essential machinery and equipment
- bilge and ballast pipings, outside and inside machinery spaces
- sea inlets, scuppers and discharges
- air vents, overflow and sounding piping systems and/or devices
- remote level indicating systems and draught measurements systems
- boiler feed system
- sea water distillation system
- fuel oil and lubricating oil systems, including pipings and tanks not forming part of the unit's structure
- live steam piping
- reduced pressure steam, draining, and exhaust piping
- machinery circulation and cooling piping
- compressed air systems for remote control, instrumentation, engine starting and bulk handling, including compressed air vessels and pipings
- accessories such as heaters, coolers, waste heat recovery units, etc.
- exhaust ducts of engines and boilers
- location and arrangement of drip-trays and gutterways
- jacking systems, for self-elevating units
- propulsion and power generating systems.

b) Thermal oil heating installation:
- piping and pumping systems
- general arrangement of the installation
- boilers including their major components
- protections against oil leakage
- monitoring and alarm systems
- nature and characteristics of the thermal oil: viscosity, flash point, fire point, decomposition temperature, auto-ignition temperature, etc.
- operation and maintenance instructions.

c) Hydraulic installations:
- piping and pumping systems
- arrangement of the installations
- protections against leakage
- description of the main components
- protection against overpressure
- monitoring and alarm systems
- nature and characteristics of the hydraulic medium (flash point and auto-ignition in particular)
- operation and maintenance instructions.

d) Incinerators:
- general arrangement of the installation
- incinerators
- piping and pumping systems
- monitoring and alarm systems
- programme of type tests and tests after completion
- operation and maintenance instructions.

e) Helicopter refuelling system:
- general arrangement of the installation
- storage vessels, piping and pumping system
- protection against leakage

- protection against overpressure
- jettisoning or emergency draining
- helideck drainage system
- emergency shutdown system.

The drawings are to be diagrammatic and are to refer to a single system, in order to facilitate their examination. They are to include:

- service pressures and temperatures, in order to determine their classes
- size and nature of materials for pipes and accessories
- capacity, prime mover and, if needed, location of the pumps
- arrangements proposed when remote control, remote monitoring or automation, are foreseen for the installations concerned
- generally, all information allowing the verification of the requirements of the Rules
- specification of systems
- fabrication specification
- welding procedure specification
- operation control procedures.

2.3.4 Electrical drawings

The following electrical plans and diagrams are to be submitted:

a) General arrangement of:
   - main switchboard
   - other distribution boards
   - emergency switchboard
   - generators
   - electric propulsion plant, if any
   - motors and equipment serving the essential services,
   - batteries
   - cable trays.

b) Single line diagrams of the main and emergency distribution networks, including single line diagrams of intrinsically safe circuits, indicating:
   - make, type, cross section area, of the conductors with mention of the intensity carried under full load
   - make, type and rating of switch-gears, fuses and circuit-breakers.

c) For main, sub and emergency switchboards:
   - assembly drawing showing the various sections and the arrangement of the equipment and instrumentation
   - bus-bar arrangement with mention of their cross section areas.

d) For offshore units where hazardous area(s) is(are) existing:
   - a general diagram showing the location of the electrical equipment within the hazardous area(s) and their safety type (e.g. Ex “d” II BT3)
   - an evidence of the safety character of the above equipment
   - the list of explosion protected equipment.

e) Impressed current cathodic protection systems if applicable.

2.3.5 Safety plans

The following safety plans and documents are to be submitted:

- general arrangement of the installation
- the dedicated sections of the Operating Manual related to classification as specified in Ch 1, Sec 1, [3.4]
- the dedicated sections of the construction portfolio as specified in Ch 1, Sec 3, [2.4.2]
- hazardous areas classification drawing, including information about all openings located in these hazardous areas
- mechanical and natural ventilation systems including location of air intakes and exhausts, air renewal rate per hour, location of fan controls
- air intakes and exhaust outlets of internal combustion engines and boilers
- fire structural protection drawings
- fire detection and extinguishing system description and drawings, including fire-fighting water piping and pumping systems, with flow calculations
- alarm and internal communication systems description and drawings
- emergency shutdown systems description, procedures and drawings
- escape way and life saving appliances description and drawings.

2.3.6 Stability file

A stability file is to be submitted by the Owner or its representative. The stability file has to include:

- lines plan
- capacity plan
- lightweight characteristics and justification, results of the inclining experiment results
- booklet of typical loading conditions including allowable ice accretion, wind speed, lifting appliances motions, etc.
- intact trim and stability booklet
- damage stability booklet
- damage control plan and booklet
- allowable vertical centre of gravity (KG max) curves based on intact and damage stability criteria.

When an inclining test is conducted, the Owner has to submit:

- inclining test protocol (prior to being carried out)
- lightweight survey report
- report of water density and wind measurements
- inclining test report and centre of gravity calculations.

2.4 Operating manual

2.4.1 General

An Operating Manual or equivalent is to be placed on board each unit. The manual should include the following information, as applicable to the particular unit, so as to provide suitable guidance to the operating personnel with regard to safe operation of the unit.

The operating manual is to be submitted for review to the Society.

Note 1: When an IMO MODU certificate is granted to the unit, the operating manual is to comply with IMO MODU Code Chapter 14 in addition to the present Article.

2.4.2 Content

As a minimum, the operating manual is to include the following informations, where applicable:

- general description and principal particulars of the unit
- pertinent data for each approved mode of operation, including design and variable loading, environmental conditions, sea bed conditions, etc.
- minimum anticipated sea and atmospheric temperatures
- general arrangement plan showing watertight compartments, closures, vents, intakes and discharges, down flooding points, fixed and variable deck loads, and the location of draught gauges and draught marks.

  If permanent ballast is to be used, the weight, location and substance used are to be clearly indicated.
- hydrostatic curves or equivalent data
- capacity plan showing the capacity, centre of gravity and free surface correction for each tank
- instructions for operation, including precautions to be taken in adverse weather, changing mode of operations, any inherent limitations of operations, etc.
- plans and description of the ballast system and instructions for ballasting
- hazardous areas drawings
- light ship data based on the results of an inclining experiment, etc
- stability information in the form of maximum KG-draught curve, or other suitable parameters based upon compliance with the required intact and damaged stability criteria
- representative examples of loading conditions for each approved mode of operation, together with means for evaluation of other loading conditions
- details of emergency shutdown procedures for electrical equipment
- identification of helicopter uses for the design of the helicopter deck
- any relevant data regarding stability including amount of snow, ice allowable on deck and wind speed
- amount of allowable marine growth
- towing arrangements and limiting conditions of operations
- temporary mooring and position anchoring arrangements
- description of the dynamic positioning systems and limiting conditions of operation
- ballast control system drawings including piping diagram showing remote and manual control devices
- bilge system
- fire bulkhead arrangement drawing
- fire and gas drawings showing types and locations of detection and extinguishing equipment

- schematic diagrams of main emergency power supplies and electrical installations
- operational procedures for onboard cranes and winches
- plan identifying the location of all watertight and weathertight closures and all non-protected openings and identifying the position open/closed of all non-automatic closing devices
- instructions for internal and external openings to be used or to be kept closed during operating conditions and transit
- access manual, as defined in Pt B, Ch 3, Sec 1, [4]
- corrosion protection system including:
  - in case of impressed current system, operating manual and detail of maintenance operations
  - in case of sacrificial anodes: detail of maintenance/retrofit operations
- list of key as-built drawings incorporated in the Operating Manual or in the construction portfolio
- design Criteria Statement issued by the Society, including classification restrictions, if any
- design data sheets referred to in the Design Criteria Statement
- Classification Certificates, continuous survey lists and other certificates issued by the Society.

2.5 Construction portfolio

2.5.1 A set of plans showing the exact location and extent of application of different grades and strengths of structural materials, together with a description of the material and welding procedures employed, is to be placed aboard the unit. Any other relevant construction information is to be included in the booklet, including restrictions or prohibitions regarding repairs or modifications.

3 Units classed after construction

3.1 General

3.1.1 The following documentation will be required for the classification of units classed after construction.

3.2 Operating manual

3.2.1 Refer to [2.4].

3.3 Structure

3.3.1 The following documentation is to be submitted:

- general arrangement
- midship section or representative sections, as applicable
- profile and deck plan
- watertight bulkheads
- rudderspan and rudderstock, if any
- shell expansion
- hatch covers, if any
- capacity plan
- loading conditions, calculation of still water bending moment and overall stresses as applicable, relevant documents, particulars of loading calculator and instruction booklet as per Society's requirements, according to the case
- stability documents.

3.4 Machinery and equipment

3.4.1 The following documentation is to be submitted:

- engine room general arrangement
- diagrammatics of fuel (transfer, service), bilge, ballast, lubricating oil, cooling, steam and feed, general service and starting compressed air piping
- drawings of boilers and air receivers
- drawings of shaft line, reduction gear and propeller, if any
- drawings of steering gear, if any
- torsional vibration calculations as per conditions laid down in the Ship Rules; such documents are required only for units less than 2 years old and for older units the propelling system of which has been modified during the two years preceding the classification.

3.5 Electrical systems

3.5.1 The following documentation is to be submitted:
- master plan of power distribution, lighting and emergency power circuits
- single line diagram of networks and switchboards
- location and arrangement of electrical equipment in hazardous areas.

3.6 Safety

3.6.1 The following documentation is to be submitted:
- safety plan
- location and rating of passive fire protection
- diagrammatics of fire-fighting systems
- fire and gas detection and fire protection causes and effects matrix.

3.7 Drilling equipment (if any)

3.7.1 The following documentation is to be submitted:
- diagrams of drilling mud process
- diagrams of pneumatic systems for dry storage.

3.8 Oil and gas production equipment (if any)

3.8.1 The following documentation is to be submitted:
- diagrams of process, venting and flaring lines
- diagrams of process pressure vessels
- ESD system causes and effects matrix.

3.9 Additional class notation AUTO

3.9.1 The following documentation is to be submitted:
- instrument and alarm list
- fire alarm system
- list of automatic safety functions (eg: slowdowns, shutdown, etc)
- function testing plan.

3.10 Other additional class notations

3.10.1 For installation or equipment covered by an additional class notation, the Society will determine the documentation to be submitted.

Appendix 1 Former Classification Notations

1 General

1.1 Correspondence between former and current class notations

1.1.1 Some class notations assigned in accordance with a previous edition of the present Rules have been modified or cancelled. The present Appendix gives correspondence between former and current notations.

- Tab 1 gives correspondence between former structural type notations and current ones
- Tab 2 gives correspondence between former service notations and current ones
- Tab 3 gives correspondence between former additional service features and current ones
- Tab 4 gives correspondence between former additional service features and current ones.

At the request of the owner, the new classification notation could be used at the renewal period.

Table 1 : Structural type notation

Former notation	Current notation	Remarks
Offshore semi-submersible unit	**column stabilized unit**	Edition December 2016
Offshore self-elevating unit	**self-elevating unit**	Edition December 2016

Table 2 : Service notation

Former notation	Current notation	Remarks
diving support-integrated diving support-capable diving support-portable	None **(1)**	Edition February 2019
gas liquefaction	**gas liquefaction unit**	Edition February 2019
gas production	**gas production unit**	Edition February 2019
production	**oil production unit**	Edition February 2019
transportation	None **(2)**	Edition December 2016
(1) See Ship Rules, Part E, Chapter 7 **(2)** Unless a new service notation corresponds to the specified service.		

Table 3 : Additional service features

Former notation	Current notation	Remarks
AUTO	Changed into additional class notation	Edition December 2016
DD	None **(1)**	Edition February 2019
HEL	Changed into additional class notation	Edition June 2015
IG	**INERTGAS**	Edition December 2016
SD	None **(1)**	Edition February 2019
VeriSTAR-HULL	Changed into additional class notation	Edition December 2016
(1) See Ship Rules, Part E, Chapter 7.		

Table 4 : Additional class notations

Former notation	Current notation	Remarks
ALS	**ALM-SUBSEA**	Edition February 2019
liquefied gas offloading	**liquefied gas transfer**	Edition February 2019

CHAPTER 2
MAINTENANCE OF CLASS

Section 1 General Provisions Concerning Surveys

1 General principles of surveys

1.1 Survey types

1.1.1 Classed units are submitted to surveys for the maintenance of class. These surveys include the class renewal survey, intermediate and annual survey, bottom survey (either survey in dry condition or in-water survey), propeller shaft survey, boiler survey, and surveys for the maintenance of additional class notations, where applicable. Such surveys are carried out at the intervals and under the conditions laid down in this Section. In addition to the above periodical surveys, units are to be submitted to occasional surveys whenever the circumstances so require; refer to Article [6].

Note 1: For the terminology related to surveys, refer to Pt A, Ch 2, Sec 2, [2.2] of the Ship Rules.

1.1.2 For the requirements related to the extent, determination of locations and acceptance criteria of thickness measurements, reference is made to Ch 2, App 1.

1.1.3 Where there are no specific survey requirements for additional class notations assigned to a unit, equipment and/or arrangements related to these additional class notations are to be examined, as applicable, to the Surveyor's satisfaction at each class renewal survey for the class.

The surveys are to be carried out in accordance with the relevant requirements in order to confirm that the hull, machinery, equipment and appliances comply with the applicable Rules and will remain in satisfactory condition based on the understanding and assumptions mentioned in Ch 1, Sec 1, [3.3].

Where the conditions for the maintenance of the class, service notations and additional class notations are not complied with, the class and/or the service notation and/or the additional class notations as appropriate will be suspended and/or withdrawn in accordance with the applicable Rules given in Ch 2, Sec 10.

Note 1: It is understood that requirements for surveys apply to those items that are required according to the Rules or, even if not required, are fitted on board.

1.1.4 Unless otherwise specified, any periodical survey other than bottom survey and propeller shaft survey may be effected by carrying out partial surveys at different times to be agreed upon with the Society, provided that each partial survey is adequately extensive. The splitting of a survey into partial surveys is to be such as not to impair its effectiveness.

1.2 Change of periodicity, postponement or advance of surveys

1.2.1 The Society reserves the right, after due consideration, to change the periodicity, postpone or advance surveys, taking into account particular circumstances.

1.2.2 When a survey becomes overdue during a voyage, the following applies:

a) In the case of a class renewal survey, the Society may grant an extension to allow for completion of this survey provided there is documented agreement to such an extension prior to the expiry date of the Certificate of Classification, adequate arrangements have been made for the attendance of the Surveyor at the first port of call and the Society is satisfied that there is technical justification for such an extension. Such an extension will be granted only until arrival at the first port of call after the expiry date of the Certificate of Classification.

   However, if owing to "exceptional circumstances", the class renewal survey cannot be completed at the first port of call, the Society may grant an extension, but the total period of extension shall in no case be longer than three months after the original limit date of the class renewal survey.

b) In the case of annual and intermediate surveys, no postponement is granted. Such surveys are to be completed within their prescribed windows.

c) In the case of all other periodical surveys and recommendations, extension of class may be granted until the arrival of the unit at the port of destination.

1.3 Extension of scope of survey

1.3.1 The Society and/or its Surveyors may extend the scope of the provisions in the present Chapter, which set forth the technical requirements for surveys, whenever and so far as considered necessary, or modify them in the case of special units or systems.

1.3.2 The extent of any survey also depends upon the condition of the unit and its equipment. Should the Surveyor have any doubt as to the maintenance or condition of the unit or its equipment, or be advised of any deficiency or damage which may affect the class, then further examination and testing may be conducted as considered necessary.

1.4 General procedure of survey

1.4.1 The general procedure of survey consists in:

- an overall examination of the parts of the unit covered by the rule requirements
- checking selected items covered by the rule requirements
- attending tests and trials where applicable and deemed necessary by the Surveyor.

1.4.2 When a survey results in the identification of significant corrosion, structural defects or damage to hull, machinery and/or any piece of its equipment which, in the opinion of the Surveyor, affect the unit's class, remedial measures are to be implemented before the unit continues in service (see also Pt A, Ch 2, Sec 2, [2.10] of the Ship Rules).

Note 1: The Society's survey requirements cannot be considered as a substitute for specification and acceptance of repairs and maintenance, which remain the responsibility of the Owner.

Note 2: In accordance with the provisions of Ch 1, Sec 1, [3.1.4], the Society will, at the request of the Owner, apply the regulations of Administrations concerning the scope and periodicity of surveys when they differ from those laid down in Article [4] and Article [5].

Note 3: During the surveys, the Surveyor does not check that the spare parts are kept on board, maintained in working order and suitably protected and lashed.

1.5 Appointment of another Surveyor

1.5.1 In compliance with the provisions of Ch 1, Sec 1, [2.5], should a disagreement arise between the Owner and the Surveyor during a survey, the Society may, at the request of the Owner, designate another Surveyor.

1.6 Access for surveys

1.6.1 The Rule requirements for class maintenance surveys are to be given due consideration during the unit's design and construction phases as regards all necessary arrangements for access. Arrangements of a special nature are to be brought to the attention of the Society.

1.6.2 For small volume void space without primary structure inside, the Society may accept that no access is provided for inspection. When necessary, the Society may call then for additional requirements.

1.7 Remote inspection techniques (RIT)

1.7.1 The remote inspection techniques (RIT) are to provide the information normally obtained from a close-up survey.

RIT surveys are to be carried out in accordance with the requirements given in the present Article and in NR533 Approval of Service Suppliers.

The proposals for use of a RIT shall be submitted by the Owner in advance of the survey and approved by the Society.

1.7.2 The equipment and the procedure for observing and reporting the survey using a RIT are to be discussed and agreed with the parties involved prior to the survey, and suitable time is to be allowed to set-up, calibrate and test all equipment in advance.

1.7.3 When using RIT as alternative to close-up survey, it shall be conducted by an approved service supplier according to NR533 and it shall be witnessed by an attending Surveyor.

1.7.4 The structure to be surveyed using the RIT is to be clean to permit meaningful examination. Visibility is to be sufficient to allow meaningful examination. The Society is to be satisfied with the methods and the orientation on the structure.

1.7.5 The attending Surveyor is to be satisfied with the method of live data presentation including pictorial representation. A good two-way communication between the Surveyor and the RIT operator shall be provided.

1.7.6 If the RIT reveals damage or deterioration that requires attention, the Surveyor may require traditional survey to be undertaken without the use of RIT.

1.8 Remote surveys

1.8.1 On a case-by-case basis and subject to special agreement with the Society, remote surveys may be accepted when requirements given in Pt A of the Ship Rules are complied with.

1.9 Alterations or additions to approved systems

1.9.1 When an alteration or addition to an approved system is proposed, documentation is to be submitted and approved by the Society before the work of alteration or addition is commenced.

1.9.2 Where the modifications may affect compliance with the rules, they are to be carried out under survey and the installation and testing are to be to the Surveyor's satisfaction.

2 Definitions and procedures related to surveys

2.1 General

2.1.1 Period of class

Period of class means the period starting either from the date of the initial classification, or from the credited date of the last class renewal survey, and expiring at the limit date assigned for the next class renewal survey.

2.1.2 Anniversary date

Anniversary date means the day of the month of each year in the period of class which corresponds to the expiry date of the period of class.

2.1.3 Survey time window

Survey time window, or more simply window, mean the fixed period during which annual and intermediate surveys are to be carried out.

2.1.4 Overdue surveys

Each periodical survey is assigned a limit date specified by the relevant requirements of the Rules (end of survey interval or end date of window) by which it is to be completed.

A survey becomes overdue when it has not been completed by its limit date.

Examples:

- Anniversary date: 15th April

  The 2000 annual survey can be validly carried out from 16th January 2000 to 15th July 2000. If not completed by 15th July 2000, the annual survey becomes overdue.
- Last bottom survey 20th October 2000:

  If not completed by 20th October 2003 or end of the class period, whichever comes first, the bottom survey becomes overdue.

2.1.5 Condition of class

A defect and/or deficiency to be dealt with in order to maintain class, within a specific period of time, is indicated as a condition of class. A condition of class is pending until it is cleared, through a survey by the attending Surveyor or upon evidence that requirements have been completed, to the satisfaction of the Society. Where it is not cleared by its limit date, the condition of class is overdue.

Conditions of class may be imposed in other cases, which, in the Society's opinion, require specific consideration.

2.1.6 Memoranda

Those defects and/or deficiencies which do not affect the maintenance of class and which may therefore be cleared at the Owner's convenience and any other information deemed noteworthy for the Society's convenience are indicated as memoranda. Memoranda are not to be regarded as conditions of class.

2.1.7 Exceptional circumstances

"Exceptional circumstances" means:

- unavailability of dry-docking facilities, or
- unavailability of repair facilities, or
- unavailability of essential materials, equipment or spare parts, or
- delays incurred by action taken to avoid severe weather conditions.

3 Certificate of Classification: issue, validity, endorsement and renewal

3.1 Issue of Certificate of Classification

3.1.1 A Certificate of Classification, bearing the class notations assigned to the unit and an expiry date, is issued to any classed unit.

3.1.2 A Provisional Certificate of Classification may serve as a Certificate of Classification in some cases, such as after an admission to class survey, after a class renewal survey, or when the Society deems it necessary.

3.1.3 The Certificate of Classification is to be made available to the Society's Surveyors upon request.

3.2 Validity of Certificate of Classification, maintenance of class

3.2.1 According to Ch 1, Sec 1, [2.5], the Society alone is qualified to confirm the class of the unit and the validity of its Certificate of Classification.

3.2.2 During the class period, a Certificate of Classification is valid when it is not expired.

The class is maintained during a certain period or at a given date, when during the said period or at such date the conditions for suspension or withdrawal of class are not met.

Refer also to Ch 1, Sec 1, [1.3.3].

3.2.3 At the request of the Owner, a statement confirming the maintenance of class may be issued by the Society based on the information in its records for that unit at the time.

This statement is issued on the assumption that the Owner has complied with the Rules, in particular with [6].

Should any information which would have prevented the Society from issuing the statement and which was not available at the time subsequently come to light, the statement may be cancelled.

Attention is drawn to Ch 2, Sec 10, [1.2], whereby the Society, upon becoming aware of a breach of the Rules, is empowered to suspend class from the date of the breach, which may be prior to the date of the statement.

3.2.4 According to the same conditions as in [3.2.3], a statement declaring that the class is maintained "clean and free from condition of class" may be issued by the Society when there is no pending condition of class at that date.

3.2.5 Classification-related documents and information are liable to be invalidated by the Society whenever their object is found to differ from that on which they were based or to be contrary to the applicable requirements. The Owner is liable for any damage which may be caused to any third party from improper use of such documents and information.

3.3 Endorsement of Certificate of Classification

3.3.1 Endorsement

When periodical surveys are satisfactorily carried out, the Certificate of Classification is endorsed accordingly.

3.3.2 Possible modifications to endorsements

The Society reserves the right to modify the endorsements made by Surveyors.

3.4 Status of surveys and recommendations

3.4.1 Information given in the Certificate of Classification, associated endorsements, Rules and specific documents enables the Owner to identify the status of surveys and recommendations.

3.4.2 The omission of such information does not absolve the Owner from ensuring that surveys are held by the limit dates and pending conditions of class are cleared to avoid any inconvenience which is liable to result from the suspension or withdrawal of class; see Ch 2, Sec 10.

4 Class renewal survey

4.1 General principles

4.1.1 Class renewal surveys of hull, structure, equipment, and machinery are to be carried out at 5 year intervals to renew the Classification Certificate(s).

4.1.2 The first class renewal survey is to be completed within 5 years from the date of the initial classification survey and thereafter within 5 years from the credited date of the previous class renewal survey. However an extension of class of 3 months maximum beyond the 5th year can be granted in exceptional circumstances. In this case the next period of class will start from the expiry date of the class renewal survey before the extension was granted.

4.1.3 For survey completed within 3 months before the expiry date of the class renewal survey, the next period of class will start from the expiry date of the class renewal survey. For Survey completed more than three months before the expiry date of the class renewal survey, the period of class will start from the survey completion date.

4.1.4 A new period of class is assigned to the ship after the satisfactory completion of the class renewal survey, and a new Certificate of Classification is issued.

4.1.5 When considered necessary by the Society the interval between class renewal surveys may be reduced.

4.1.6 Class renewal survey requirements of units of unusual design, in lay-up or in unusual circumstances will be determined on individual basis.

4.1.7 At the request of the Owner, and upon the Society's approval of the proposed arrangements, a system of Continuous Survey may be undertaken whereby the class renewal survey requirements are carried out in regular rotation in accordance with the Rules of the Society to complete all the requirements and scope of the particular class renewal survey within a five year period. Any defects that may affect classification found during the survey, are to be reported to the Society and dealt with to the satisfaction of the Surveyor.

4.2 Normal survey system (SS)

4.2.1 When the normal survey system is applied to units with a 5 year period of class, the class renewal survey may be commenced at the fourth annual survey and continued during the following year with a view to completion by its due date. In this case the survey may be carried out by partial surveys at different times. The number of checks to be performed at each partial survey and the interval between partial surveys are to be agreed by the Society.

4.2.2 A class renewal survey may be commenced before the fourth annual survey at the request of the Owner. In this case, the survey is to be completed within fifteen months. The conditions for the execution of partial surveys are the same as those referred to in [4.2.1].

4.3 Continuous survey system (CS)

4.3.1 The request by the Owner for admission to the continuous survey system will be considered by the Society and agreement depends on the type and age of hull and machinery. This system may apply to the class renewal survey of hull (CSH), machinery (CSM) or other installations such as refrigerating installations (CSR) covered by an additional class notation.

4.3.2 When the continuous survey system is applied, appropriate notations as indicated in [4.3.1] are entered in the Register.

4.3.3 Units subject to the continuous survey system are provided with lists of items to be surveyed under this system.

4.3.4 For items inspected under the continuous survey system, the following requirements generally apply:

- the interval between two consecutive surveys of each item is not to exceed five years
- the items are to be surveyed in rotation, so far as practicable ensuring that approximately equivalent portions are examined each year
- the Society may credit for continuous survey results of inspections carried out before the admission to the continuous survey scheme
- each item is to be surveyed at one time, as far as practicable; the Society may, however, allow possible repair work to be carried out within a certain period.

4.3.5 For units under continuous survey, items not included in the continuous survey cycle are to be inspected according to the provisions given in [4.2]. Bottom surveys, when relevant, are to be carried out according to the requirements of [5.3]. In addition, the bottom survey which is to be carried out in conjunction with the end of class period is to be performed within 15 months before the end of this class period.

4.3.6 Upon application by the Owner, the Society may agree, subject to certain conditions, that some items of machinery which are included in the continuous survey cycle are examined by the Chief Engineer. The Chief Engineer's inspection is to be followed by a confirmatory survey carried out by a Surveyor. The conditions for the application of this procedure are given in Pt A, Ch 2, App 2 of the Ship Rules.

4.3.7 The continuous survey system does not supersede the annual surveys and other periodical and occasional surveys.

4.3.8 A general examination of the unit, as detailed in Pt A, Ch 3, Sec 1 of the Ship Rules for annual surveys, is to be carried out at the end of the period of class.

4.3.9 For laid-up units, specific requirements given in [8.1] apply.

4.3.10 The continuous survey system may be discontinued at any time at the discretion of the Society, or at the request of the Owner, and a specific arrangement devised.

4.4 Planned maintenance survey system for machinery (PMS)

4.4.1 A planned maintenance survey system may be considered as an alternative to the continuous survey system for machinery and is limited to components and systems covered by it. When such a system approved by the Society is implemented, a survey system other than those normally adopted and with intervals different from those of the continuous survey system as detailed in [4.3] may be accepted.

4.4.2 The conditions for approval of the planned maintenance survey system, the determination of survey item intervals and the general scope of surveys are detailed in Pt A, Ch 2, App 1 of the Ship Rules.

4.4.3 When the planned maintenance survey system is applied, the notation PMS is entered in the Register.

4.4.4 The Chief Engineer shall be the responsible person onboard in charge of the PMS.

The conditions related to Chief Engineer's inspections within the scope of PMS are given in Pt A, Ch 2, App 2 of the Ship Rules.

Items surveyed by this authorised Chief Engineer will be subject to the confirmatory survey as detailed in Pt A, Ch 2, App 2 of the Ship Rules.

Documentation on overhauls of items covered by the PMS are to be reported and signed by the Chief Engineer.

4.4.5 The planned maintenance survey system does not supersede the annual surveys and other periodical and occasional surveys.

4.4.6 A general examination of the machinery, as detailed in Pt A, Ch 3, Sec 1 of the Ship Rules for annual surveys, is to be carried out at the end of the period of class.

4.4.7 The planned maintenance survey system may be discontinued at any time at the discretion of the Society, or at the request of the Owner, and a specific arrangement devised.

5 Other periodical surveys

5.1 Annual surveys

5.1.1 Annual surveys are to be carried out within 3 months before or after each anniversary date.

5.2 Intermediate surveys

5.2.1 An intermediate survey, where applicable, is to be carried out within the window from three months before the second to three months after the third anniversary date.

5.2.2 The intermediate survey is not applicable to units with class symbol **II**.

5.3 Bottom survey

5.3.1 Bottom survey means the examination of the outside of the unit's bottom and related items. This examination may be carried out with the unit in dry-dock (or on a slipway) or afloat: in the former case, the survey will be referred to as dry-docking survey, while in the latter case as in-water survey.

5.3.2 The Owner is to notify the Society whenever the outside of the unit's bottom and related items can be examined in dry dock or on a slipway.

5.3.3 For units classed with the class symbol **I,** there are to be two examinations of the outside of the unit's bottom and related items in each period of class of five years.

The interval between any two such examinations is not to exceed 36 months.

An extension of examination of the unit's bottom of three months beyond the due date can be granted in exceptional circumstances, as defined in Pt A, Ch 2, Sec 2, [2.1.7] of Ship Rules.

Note 1: Attention is also drawn to the relevant requirements concerning the application of national and international regulations.

5.3.4 For permanent units and for other units where drydocking is impracticable, the examination of the outside of the unit's underwater parts and related items may be carried out during an in-water survey, subject to the agreement of the Society if the additional class notation **INWATERSURVEY** is not granted.

5.3.5 For mobile offshore drilling units operating in salt water for less than six (6) months each year, the survey interval may be increased by the Society.

The interval between examinations of the outside of unit's underwater parts and related items for units operating in fresh water or in particular site conditions may be greater, as agreed by the Society.

5.3.6 Consideration may be given at the discretion of the Society to any special circumstances justifying an extension or a reduction of these intervals.

5.3.7 For units under the normal survey system, one of the bottom surveys to be performed in each period of class is to be carried out in conjunction with the class renewal survey.

5.3.8 For units under the continuous survey system of hull (CSH), one of the bottom surveys to be performed in each period of class is to be carried out in conjunction with the end of class period.

5.4 Propeller shaft survey

5.4.1 Definition

Propeller shaft survey means survey of propeller shafts and tube shafts (hereafter referred to as propeller shafts) as well as survey of other propulsion systems.

The different types of surveys to which propeller shaft may be subjected and the intervals at which they are to be carried out are given in Pt A, Ch 2, Sec 2 of the Ship Rules.

These surveys are:

- complete survey
- modified survey.

The scope is detailed in Pt A, Ch 3, Sec 5 of the Ship Rules. The requirements to be complied with at each survey are listed in [5.4.2] and [5.4.3].

5.4.2 Propeller shaft complete survey

Propeller shafts are to be submitted to complete examination as detailed in Pt A, Ch 2, Sec 5 of the Ship Rules. The scope of the modified survey is detailled in Pt A, Ch 3, Sec 5 in the Ship Rules.

5.4.3 Propeller shaft modified survey

A modified survey of the propeller shaft is an alternate way of examination as detailed in Pt A, Ch 2, Sec 5 of the Ship Rules and which scope is given in Pt A, Ch 3, Sec 5 of the Ship Rules.

5.4.4 Propeller shaft Monitoring System (MON-SHAFT)

Where, in addition to the conditions stated in [5.4.3] for modified survey, the additional class notation **MON-SHAFT** is assigned, the propeller shaft need not be withdrawn at both the complete and modified surveys provided that all condition monitoring data is found to be within permissible limits and the remaining requirements for the respective surveys are complied with.

5.4.5 Other propulsion systems

Driving components serving the same purpose as the propeller shaft in other propulsion systems, such as directional propellers, vertical axis propellers, water jet units, dynamic positioning systems and thruster assisted mooring systems, are to be submitted to periodical surveys at intervals not exceeding five years.

5.4.6 Extension of intervals of propeller shaft surveys

In the case of mobile offshore drilling unit, due to low running hours on propeller shafts, extended intervals between propeller shaft surveys may be considered based on:

- satisfactory diver's external examination of stern bearing and outboard seal area including weardown check, as far as possible
- internal examination of the shaft area (inboard seals) in propulsion room(s)
- confirmation of satisfactory lubricating oil records (oil loss rate, contamination)
- examination/replacement of shaft seal elements in accordance with seal manufacturer's recommendations.

5.5 Boiler survey

5.5.1 There are to be two internal examinations of boilers in each period of class of five years.

In all cases, the interval between any two such examinations is not to exceed 36 months.

5.5.2 There is to be one internal examination of thermal oil heaters in each period of class of five years.

5.5.3 For units of eight years of age and over fitted with one single boiler supplying steam for main propulsion, the interval between two boiler surveys may be specially considered.

5.5.4 Boilers are also submitted to an external inspection as a part of the annual survey of machinery.

5.5.5 The scope of the boiler survey is detailed in Pt A, Ch 3, Sec 6 of the Ship Rules.

5.6 Links between anniversary dates and annual surveys, intermediate surveys and class renewal surveys

5.6.1 The link between the anniversary dates, the class renewal survey (when carried out according to the normal system), and the annual and intermediate surveys is given in Fig 1.

Figure 1 : Links between anniversary dates and annual, intermediate and class renewal surveys

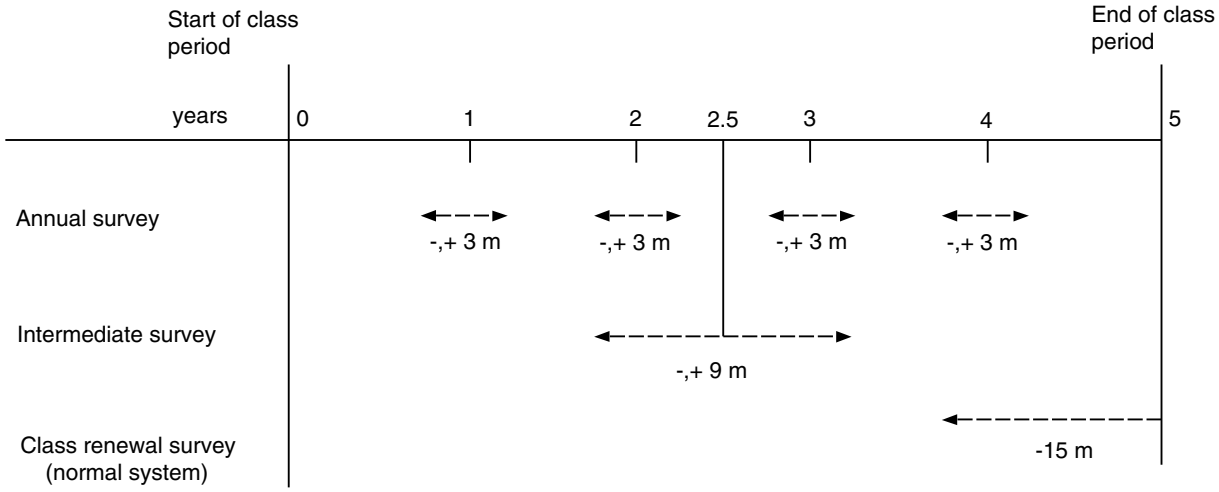

6 Occasional surveys

6.1 General

6.1.1 Refer to the Ship Rules Pt A, Ch 2, Sec 2, [6].

6.2 Damage survey

6.2.1 It is the responsibility of the owner/operator of the unit to report to the Society without delay any damage, defect or breakdown, which could invalidate the conditions for which a classification has been assigned so that it may be examined at the earliest opportunity by the Society's Surveyor(s). All repairs found necessary by the Surveyor are to be carried out to his satisfaction.

6.3 Repairs

6.3.1 Where repairs to hull, legs, columns or other structures, machinery or equipment, which affect or may affect classification, are planned in advance to be carried out, a complete repair procedure including the extend to proposed repair and the need for Surveyors attendance is to be submitted to and agreed upon by the Society reasonably in advance. Failure to notify the Society, in advance of the repairs, may result in suspension of the unit's classification until such time as the repair is redone or evidence submitted to satisfy the Surveyor that the repair was properly carried out. This applies also to repairs during voyage or on site.

6.3.2 The above is not intended to include maintenance and overhaul to hull, other structures, machinery and equipment in accordance with recommended manufacturers procedures and established marine practice and which does not require Society approval; however, any repair as a result of such maintenance and overhauls which affects or may affect classification is to be noted in the units log and submitted to the Surveyor.

6.4 Reactivation surveys

6.4.1 In the case of units which have been out of service for an extended period, the requirements for reactivation surveys will be specially considered in each case with due regard given to the status of surveys at the time of the commencement of the lay-up period, the length of the period, and conditions under which the unit had been maintained during that period.

6.5 Alterations

6.5.1 No alterations which may affect classification are to be made to the hull or machinery of a classed unit unless plans of proposed alterations are submitted and approved by the Society before the work of alterations is commenced. Such work is to be carried out in accordance with approved plans and tested on completion as required by the Rules and to the satisfaction of the Surveyor.

6.6 Welding and replacement of materials

6.6.1 Welding of steels, including high strength structural steel, is to be to the satisfaction of the Society.

6.6.2 Welding or other fabrication performed on steels of special characteristics or repairs or renewals of such steel or in areas adjacent to such steel is to be accomplished with procedures approved by the Society considering the special materials involved. Substitution of steels differing from those originally installed is not to be made without approval by the Society.

6.6.3 The Society may reference IACS Recommendations No 11 - Materials Selection Guideline for Mobile Offshore Drilling Units when considering suitable replacement materials.

7 Change of ownership

7.1

7.1.1 In the case of change of ownership, the unit retains its current class with the Society provided that:

- the Society is informed of the change sufficiently in advance to carry out any survey deemed appropriate, and,
- the new Owner signs the appropriate request, involving acceptance of the Society's general conditions and Rules. This request covers inter alia the condition of the unit when changing ownership.

Note 1: The unit's class is maintained without prejudice to those provisions in the Rules which are to be enforced in cases likely to cause suspension or withdrawal of the class such as particular damages or repairs to the unit of which the Society has not been advised by the former or, as the case may be, new Owner.

Note 2: No information whatsoever related to the class of the unit will be provided or confirmed to any third party, unless the appropriate request for information is duly completed and signed by the party making the request and the authorisation of the current Owner is obtained.

8 Lay-up and re-commissioning

8.1 General principles

8.1.1 A unit put out of commission may be subject to specific requirements for maintenance of class, as specified below, provided that the Owner notifies the Society of the fact.

If the Owner does not notify the Society of the laying-up of the unit or does not implement the lay-up maintenance programme, the unit's class will be suspended and/or withdrawn when the due surveys are not carried out by their limit dates in accordance with the applicable requirements given in Ch 2, Sec 10.

8.1.2 The lay-up maintenance programme provides for a "laying-up survey" to be performed at the beginning of lay-up and subsequent "annual lay-up condition surveys" to be performed in lieu of the normal annual surveys which are no longer required to be carried out as long as the unit remains laid-up. The minimum content of the lay-up maintenance programme as well as the scope of these surveys are given in Pt A, Ch 3, App 1 of the Ship Rules. The other periodical surveys which become overdue during the lay-up period may be postponed until the re-commissioning of the unit.

8.1.3 Where the unit has an approved lay-up maintenance programme and its period of class expires, the period of class is extended until it is re-commissioned, subject to the satisfactory completion of the annual lay-up condition surveys as described in [8.1.2].

8.1.4 The periodical surveys carried out during the lay-up period may be credited, either wholly or in part, at the discretion of the Society, having particular regard to their extent and dates. These surveys will be taken into account for the determination of the extent of surveys required for the re-commissioning of the unit and/or the expiry dates of the next periodical surveys of the same type.

8.1.5 When a unit is re-commissioned, the Owner is to notify the Society and make provisions for the unit to be submitted to the following surveys:

- an occasional survey prior to re-commissioning, the scope of which depends on the duration of the lay-up period
- all periodical surveys which have been postponed in accordance with [8.1.2], taking into account the provisions of [8.1.4].

8.1.6 Where the previous period of class expired before the re-commissioning and was extended as stated in [8.1.3], in addition to the provisions of [8.1.5] a complete class renewal survey is to be carried out prior to re-commissioning. Those items which have been surveyed in compliance with the class renewal survey requirements during the 15 months preceding the re-commissioning may be credited. A new period of class is assigned from the completion of this class renewal survey.

8.1.7 The principles of intervals or limit dates for surveys to be carried out during the lay-up period, as stated in [8.1.1] to [8.1.6], are summarised in Fig 2.

8.1.8 The scope of the laying-up survey and annual lay-up condition surveys are described in detail in Pt A, Ch 3, App 1 of the Ship Rules.

Figure 2 : Survey scheme of a case of a lay-up going beyond the expiry date of the period of class

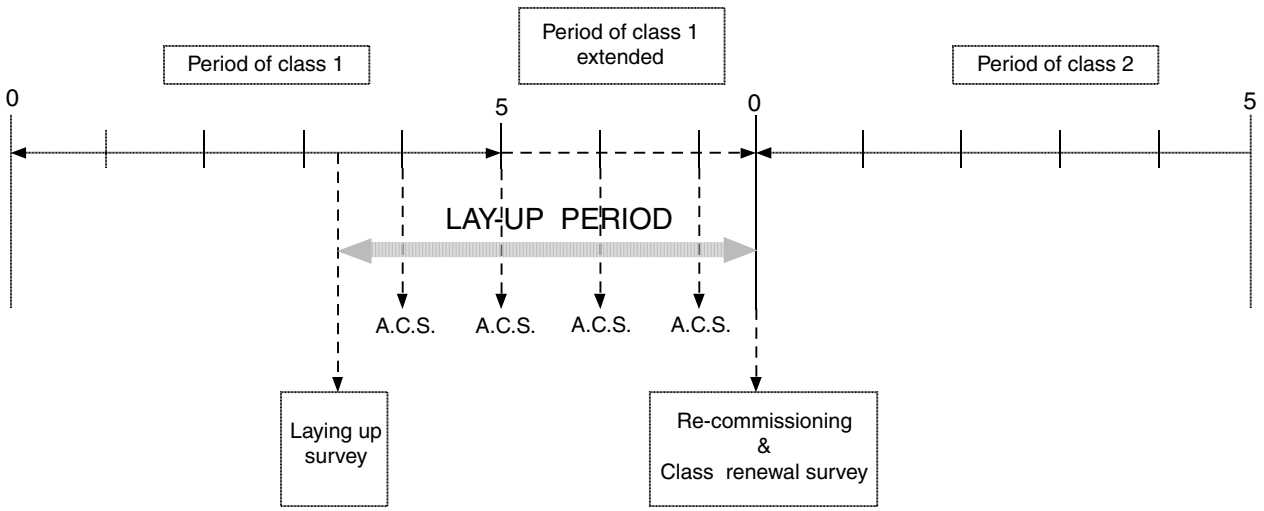

Note 1: A. C. S. means annual lay-up condition survey.

9 Conversions - Feasibility study

9.1 General

9.1.1 A feasibility study is required for projects based on conversion of existing units.

As a minimum, complete re-measurements of the scantlings including comprehensive surveys are required to evaluate the condition of the unit. Minimum requirements will be defined on a case by case basis.

Note 1: For conversion of a ship into an offshore unit, reference should be made to the Guidance Note NI593 Ship Conversion into Surface Offshore Units and Redeployment of Surface Offshore Units.

Section 2 Annual Survey

1 General

1.1 Application

1.1.1 The requirements of this Section apply to annual surveys of all units. The specific requirements for annual surveys related to service notations and additional class notations assigned to units are addressed in Ch 2, Sec 5, Ch 2, Sec 6, Ch 2, Sec 7 and Ch 2, Sec 9.

1.1.2 At the time of annual surveys, the unit is to be generally examined. The survey is to include a visual inspection of the hull, equipment and machinery of the unit and some tests thereof, so far as necessary and practicable in order to verify that the unit is in a acceptable general condition and is properly maintained.

1.1.3 Owners are reminded that any modification to the unit's hull, equipment and machinery affecting its classification is to be made known to the Society.

2 Hull

2.1 Hull and hull equipment

2.1.1 The survey is to include a general external examination and testing, where appropriate, of the following items, as applicable:

- outer shell plating above the waterline, relevant shell doors and accessible parts of the rudder(s)
- plating of freeboard deck and exposed decks, superstructures, with their openings and means of closure
- if applicable, structure in the vicinity of moon pool or other major openings or discontinuities
- cargo hatchways and other openings on exposed decks, with their coamings and their means of closure and securing arrangements
- sidescuttles and deadlights, chutes and other openings with their means of closure
- bulwarks, guard rails, freeing ports, gangways and lifelines, ladders
- scuppers and sanitary discharges, valves on discharge lines and their controls
- ventilators, air pipes, overflow pipes and gas vent pipes, with their means of closure and flame screens, where required
- all automatic air pipe heads installed on the exposed decks (i.e. those extending above the freeboard deck or superstructure decks)
- freeboard marks on the unit's sides
- deck equipment such as lifeboat davit foundations, bollards, fairleads, hawse pipes, etc., masts and associated rigging, including lightning conductors
- anchoring and mooring equipment, as far as practicable, including housing, supporting equipment and connection to the unit's main structure
- watertight bulkheads, their watertight doors and associated local and remote controls, and their watertight penetrations
- main and auxiliary steering arrangements, including their associated equipment and control systems, and manoeuvring gear
- fire divisions and fire doors, dampers in ventilation ducts, means of closure of skylights and other openings
- confirmation that emergency escape routes from accommodation and service spaces are satisfactory
- confirmation that the drainage from enclosed cargo spaces situated on the freeboard deck is satisfactory
- engine room
- where fitted, helicopter deck and its supporting structure, safety net and arrangements for the prevention of sliding
- availability of loading manual or, where required, electronic loading instrument, including standard test
- availability of approved stability documentation
- foundations of areas used for heavy lifting equipment, drilling equipment, diving equipment hoisting appliances, pipe laying stinger, jacket launching equipment (rocker arms, skid beams).

Note 1: Due attention is also to be given to fuel oil piping passing through ballast tanks, which is to be pressure tested where doubts arise.

2.1.2 Suspect areas identified at previous class renewal surveys are to be examined. Areas of substantial corrosion identified at previous class renewal or intermediate surveys are to be subjected to thickness measurements.

2.1.3 Ballast spaces are to be internally examined when required as a consequence of the results of the class renewal survey or the intermediate survey.

Thickness measurements are to be carried out as considered necessary by the Surveyor.

2.1.4 Column stabilized units and TLP

For column stabilized or TLP units, in addition, the survey includes the following:

- general examination of accessible areas, particularly of columns, lower hull and bracings
- assessment of watertightness of immersed parts
- external examination of parts and areas indicated in Ch 2, Sec 4, [2.2.1] and Ch 2, Sec 4, [2.2.3]
- mooring and tendon support foundation internally.

2.1.5 Self-elevating units

For self-elevating units, in addition, the survey includes the following:

- external examination, as far as practicable, with due consideration for working water draughts from the last survey, of the jackhouses and their foundations as well as the legs above the waterline
- external examination of the upper structure indicated in Ch 2, Sec 4, [2.2.1] and Ch 2, Sec 4, [2.2.3] including the visible areas of the hull in elevated position.

3 Machinery and systems

3.1 General machinery installations

3.1.1 The survey of general machinery installations is to cover the following items:

- general examination of machinery and boiler spaces with particular attention to the fire and explosion hazards; confirmation that emergency escape routes are practicable and not blocked
- general examination of the machinery, steam, hydraulic, pneumatic and other systems and their associated fittings, for confirmation of their proper maintenance
- testing of the means of communication and order transmission between the navigating bridge and the machinery control positions and other control stations
- confirmation that the rudder angle indicator on the bridge is in working order
- examination, as far as practicable, of the bilge pumping systems and bilge wells, including operation of the pumps, remote reach rods and level alarms, where fitted
- visual examination of the condition of any expansion joints in sea water systems
- external examination of pressure vessels other than boilers and their appurtenances, including safety devices, foundations, controls, relieving gear, high pressure piping, insulation and gauges.

3.1.2 When the unit is equipped with a refrigerating plant (whether or not covered by an additional class notation), the annual survey is to include the external examination of:

- pressure vessels of the installation to the same extent as indicated in [3.1.1]
- refrigerant piping, as far as practicable
- for refrigerating machinery spaces using ammonia as refrigerant:
  - ventilation system including functional test
  - water-spraying fire-extinguishing system; see [3.5.2] item d)
  - bilge system including functional test
  - electrical equipment, confirming its proper maintenance
  - gas detection system
  - breathing apparatus and protective clothing.

3.1.3 When the unit is equipped with thruster installations, the annual survey is to include:

- an external examination of the machinery installation
- an operating test of the complete installation.

3.1.4 For exhaust gas water heater and Waste Heat Recovery Unit (WHRU), a functional test while in operation is to be carried out, during which the following items are checked:

- the piping and shut off valves for detection of leakages
- the condition of the insulation
- the operation of indication, control and safety device.

3.2 Boilers

3.2.1 For main and auxiliary boilers, the annual survey consists of an external examination of boilers and their appurtenances, including safety devices, foundations, controls, relieving, high pressure and steam escape piping, insulation and gauges.

3.2.2 For thermal oil heaters, a functional test while in operation is to be carried out, during which the following items are checked:

- the heater for detection of leakages
- the condition of the insulation
- the operation of indication, control and safety devices
- the condition of remote controls for shut-off and discharge valves.

A satisfactory analysis of the quality of oil is to be made available to the Surveyor.

3.2.3 For exhaust gas thermal oil heaters, in addition to the requirements of [3.2.2], a visual examination and a tightness testing to the working pressure of the heater tubes are to be carried out.

3.3 Electrical machinery and equipment

3.3.1 The survey of electrical machinery and equipment is to cover the following items:

- general examination, visually and in operation, as feasible, of the electrical installations for power and lighting, in particular main and emergency generators, electric motors, switchboards, switchgears, cables and circuit protective devices, indicators of electrical insulation and automatic starting, where provided, of emergency sources of power
- checking, as far as practicable, the operation of emergency sources of power and, where they are automatic, also including the automatic mode.

3.3.2 The survey is also to cover the bridge control of propulsion machinery, and related arrangements (alarms and safety devices), when fitted.

3.4 Column stabilized units and TLP

3.4.1 For column stabilized and TLP units, the survey includes also the following additional items:

- visual examination and functional testing of the ballasting systems to the satisfaction of the Surveyor, including the tank level gauges and remote valves
- means of access, ventilation, pumping as well as the emergency lighting into the columns and lower compartments
- if dry bracings are provided with flooding detection means, testing of the plant satisfactory operation
- general examination and review of records of operation of mooring or tensionning system.

3.5 Fire protection, detection and extinction

3.5.1 The survey of fire prevention and other general arrangements is to cover the following items:

- checking that fire control plans are properly posted
- examination and testing, as feasible, of the operation of manual and/or automatic fire doors, where fitted
- checking, as far as practicable, that the remote controls for stopping fans and machinery and shutting off fuel supplies in machinery spaces and, where fitted, the remote controls for stopping fans in accommodation spaces and the means of cutting off power to the galley are in working order
- examination and testing of the closing arrangements of ventilators, funnel annular spaces, skylights, doorways and tunnel, where applicable
- examination, as far as practicable, and testing, as feasible and at random, of the fire and/or smoke detection systems.

3.5.2 The survey requirements for all types of fire-fighting systems that are usually found on board units related either to machinery spaces or to storage areas and/or spaces or to accommodation spaces, irrespective of the service notation assigned, are the following:

a) Water fire system:
   - examination of the fire main system and confirmation that each fire pump including the emergency fire pump can be operated separately so that the two required powerful jets of water can be produced simultaneously from different hydrants, at any part of the ship whilst the required pressure is maintained in the fire main
   - checking that fire hoses, nozzles, applicators, spanners and international shore connection (where fitted) are in satisfactory working condition and situated at their respective locations.

b) Fixed gas fire-extinguishing system:
- external examination of receivers of CO_2 (or other gas) fixed fire-extinguishing systems and their accessories, including the removal of insulation for insulated low pressure CO_2 containers
- examination of fixed fire-fighting system controls, piping, instructions and marking; checking for evidence of proper maintenance and servicing, including date of last system tests
- test of the alarm triggered before the CO_2 is released.

c) Sprinkler system:
- examination of the system, including piping, valves, sprinklers and header tank
- test of the automatic starting of the pump activated by a pressure drop
- check of the alarm system while the above test is carried out.

d) Water-spraying system:
- examination of the system, including piping, nozzles, distribution valves and header tank
- test of the starting of the pump activated by a pressure drop (applicable only for machinery spaces).

e) Fixed foam systems (low or high expansion):
- examination of the foam system
- test to confirm that the minimum number of jets of water at the required pressure in the fire main is obtained when the system is in operation
- checking the supplies of foam concentrate and receiving confirmation that it is periodically tested (not later than three years after manufacture and annually thereafter) by the manufacturer or an agent.

f) Dry powder system:
- examination of the dry powder system, including the powder release control devices
- checking the supplies of powder contained in the receivers and that it has maintained its original smoothness
- checking that the pressure of propelling inert gas contained in the relevant bottles is satisfactory.

3.5.3 As far as other fire-fighting equipment is concerned, it is to be checked that:
- semi-portable and portable fire extinguishers and foam applicators are in their stowed positions, with evidence of proper maintenance and servicing, and detection of any discharged containers
- firemen's outfits are complete and in satisfactory condition.

3.5.4 Where a helideck is fitted, the following is to be checked, as far as appropriate:
- drainage arrangements around the landing area
- fire fighting appliances and arrangements (to be surveyed as per [3.5.2], according to the equipment installed)
- overall examination of refuelling systems and hangar facilities for cleanliness and absence of leaks, condition of gutters and drainage arrangement.

3.6 Hazardous areas

3.6.1 The survey consists in:
- examination of hazardous areas including their closures and boundaries
- confirmation, as far as practicable, that the following equipment are in satisfactory condition: ventilation systems, ducting arrangements, fire dampers, fans, alarms for loss of pressure, gas detection and associated arrangements, electrical and mechanical safe equipment, arrangement for purging sequences and for black start.

3.7 Other safety equipment

3.7.1 The survey consists in:
- examination of navigation lights, associated alarm and signal devices including helideck lights, if fitted
- confirmation that other safety systems such as the alarm and communication system are in working order.

Section 3 Intermediate Survey

1 General

1.1 Application

1.1.1 The requirements of this Section apply to intermediate surveys of all units, except units assigned with the service notation **drilling** for which the provisions of Ch 2, Sec 5 are applicable. The specific requirements for intermediate surveys related to service notations and additional class notations assigned to units are addressed in Ch 2, Sec 6, Ch 2, Sec 7 and Ch 2, Sec 9.

1.1.2 The intermediate survey is to include examination and checks on a sufficiently extensive part of the structure to show that the structures of the unit are in satisfactory condition so that the unit is expected to operate until the end of the current period of class, provided that the unit is properly maintained and other surveys for maintenance of class are duly carried out during this period.

1.1.3 Prior to the commencement of any part of the class renewal survey and intermediate survey, a survey planning meeting is to be held between the attending Surveyor(s), the Owner's representative in attendance and the thickness measurement company representative, where involved.

2 Hull

2.1 Survey

2.1.1 The requirements given in Tab 1 for the survey and testing of salt water ballast spaces, storage holds (if any), process tanks (if any), and storage tanks are to be complied with.

Table 1 : Intermediate survey of hull (all units)

ITEM	Age of unit (in years at time of intermediate survey)		
	5 < age ≤ 10	10 < age ≤ 15	age > 15
SALT WATER BALLAST SPACES **(1) (2) (3) (4)**	One peak tank and at least two representative spaces between the peak bulkheads are to be internally examined.		
	Thickness measurements, if considered necessary by the Surveyor		
			For units over 15 years of age, tightness test of double bottom ballast spaces in ways of storage holds, if considered necessary by the Surveyor.

(1) If such examinations reveal no visible structural defects, the examination may be limited to a verification that the protective coating remains effective and that the sacrificial anodes, if any, are less than 50% depleted.

(2) Where the protective coating is found to be in poor condition, where corrosion or other defects are found, where a protective coating has never been applied, i.e. neither at the time of construction nor thereafter, or where sacrificial anodes are found to be more than 50% depleted, the examination is to be extended to other ballast spaces of the same type.

(3) For salt water ballast spaces other than double bottom tanks, where a protective coating is found to be in poor condition, and is not renewed, where soft coating has been applied or where a protective coating has never been applied, i.e. neither at the time of construction nor thereafter, maintenance of class is to be subject to the spaces in question being internally examined at annual surveys. The Society may consider waiving such internal examination at annual surveys of tanks protected with soft coating, whose size is 12 m^3 or less.

For salt water ballast double bottom tanks, where such breakdown of coating is found and is not renewed, where soft coating has been applied or where a protective coating has never been applied, i.e. neither at the time of construction nor thereafter, maintenance of class may be subject to the tanks in question being internally examined at annual intervals.

(4) The representative spaces are to be based on the record of the previous class intermediate surveys, previous class renewal surveys, the repair history of the tanks and they should not be the same for each intermediate survey.

Note 1: Due attention is also to be given to fuel oil piping passing through ballast tanks, which is to be pressure tested should doubts arise.

2.2 Units with particular structure

2.2.1 In addition, examination will be made of particularly critical areas of the structure such as:

- inside of bracings for column stabilized units and TLP
- leg-hull connection of self-elevating units
- structure around corners of moon pool or other large openings
- tension legs upper connectors internal supporting structure for TLPs
- tensioning system general examination and review of records of operation for TLPs
- mooring internal supporting structure
- mooring tensioning system general examination and review of records of operation
- topside supporting structure (stool)
- other critical areas, as found necessary by the Surveyor.

2.3 Units including hazardous areas

2.3.1 In addition, electrical equipment in hazardous areas will be examined and tested, with particular attention to:

- protective earthing
- integrity of flame-proof enclosures
- integrity of pressurised enclosures and associated fittings
- condition of increased safety equipment
- condition of cabling (damage to outer sheath, corrosion or metal braiding)
- interlocking systems of electrical power supply to spaces protected by air locks such as electric motors rooms, storage control rooms
- operation of pressurised equipment and functioning of alarms.

Section 4 Class Renewal Survey

1 General

1.1 Application

1.1.1 The requirements of this Section apply to class renewal surveys of all units. The specific requirements for class renewal surveys related to service notations and additional class notations assigned to units are addressed in Ch 2, Sec 5, Ch 2, Sec 6, Ch 2, Sec 7 and Ch 2, Sec 9.

1.1.2 The class renewal survey is to include sufficiently extensive examination and checks to show that the structures, main and auxiliary machinery, systems, equipment and various arrangements of the unit are in satisfactory condition or restored to such condition as to allow the unit to operate for the new period of class to be assigned, provided that the unit is properly maintained and other surveys for maintenance of class are duly carried out during this period.

The examinations of the structure are to be supplemented by thickness measurements and testing as deemed necessary, to ensure that the structural integrity remains effective and sufficient to discover substantial corrosion, significant deformation, fractures, damages or other structural deterioration.

1.1.3 The Owner is to provide the necessary facilities to enable this class renewal survey.

1.1.4 Prior to the commencement of any part of the class renewal survey and intermediate survey, a survey planning meeting is to be held between the attending Surveyor(s), the Owner's representative in attendance and the thickness measurement company representative, where involved.

1.1.5 When the unit is under the continuous survey system for hull or machinery, the scope of the class renewal survey as described in this Section is carried out on a continuous basis over the period of class.

When the machinery installation is surveyed under the Planned Maintenance System, a specific programme of survey replaces the scope of the class renewal survey of machinery and systems as laid down in Article [3].

1.1.6 Upon completion of the class renewal survey, or at the end of the period of class (if the relevant part of the unit is surveyed under the continuous survey system), a general examination of the unit having the same scope as that of an annual survey is to be carried out.

2 Hull and hull equipment

2.1 Bottom survey

2.1.1 A bottom survey in dry condition, including anchoring and mooring equipment, is to be carried out, unless underwater surveys have been accepted by the Society in lieu of dry-docking, as detailed in Ch 2, Sec 8.

2.1.2 Anchors, windlass(es) and chain cables are to be ranged and examined, and the required complement and condition are to be checked. When the unit is more than 5 years old, chain cables are to be gauged. Any length of chain cable which is found to be damaged or excessively worn is to be renewed.

2.1.3 Sea valves and cocks are to be opened up for internal examination.

2.1.4 Thickness measurements of the outer shell, as and if required within the scope of the related class renewal survey, are to be carried out, if not already done within 15 months before the end of the class period.

2.2 Decks, hatch covers and equipment

2.2.1 Decks are to be examined, particular attention being given to the areas where stress concentration or increased corrosion are likely to develop, such as hatch corners and other discontinuities of structure.

Deck erections such as hatch coamings, deckhouses and superstructures are to be examined.

Deck and corresponding equipment inducing important loads such as heavy lifting equipment, helideck, drilling equipment, diving equipment hoisting appliances, pipe laying stinger, jacket launching equipment (rocker arms, skid beams).

Examination is also made of the connections of equipment and attachments to load carrying structural elements.

Due attention is to be given to the examination in way of end and side openings and related shell and inner doors.

2.2.2 The survey of hatch covers and coamings, if any, is to include:

- checking of the satisfactory operation of all mechanically operated hatch covers: stowage and securing in open condition, proper fit, locking and efficiency of sealing in closed position, operational testing of hydraulic and power components, wires, chains and link drives
- checking of the effectiveness of sealing arrangements of all hatch covers by means of hose testing or equivalent
- thickness measurements of coaming and attached stiffeners, hatch cover plating and stiffeners (see Tab 3 or Tab 4 or Tab 6).

2.2.3 The survey of hull equipment is also to cover the following points:

- windlass and chain stoppers, with disassembly as deemed necessary to verify the condition of the equipment and control and safety devices, hawse pipes
- steering arrangements, including steering gear, control and indication devices, operational tests and disassembly as deemed necessary; in the case of chain and rod gears, chains, rods, sheaves, pins and rollers are to be examined for wear
- connection of masts and standing rigging to the hull structure as well as condition of structure underneath.

2.2.4 Piping systems outside tanks and compartments are to be visually examined and pressure tested as necessary, as per the requirements laid down for the class renewal survey of machinery and systems; see [3.5].

2.2.5 Automatic air pipe heads installed on the exposed decks (i.e. those extending above the freeboard deck or superstructure decks) are to be completely examined, both externally and internally, in accordance with the requirements given in Tab 1.

2.2.6 For surface units, thorough examination is to be made of outside plating, particularly bottom, side shells and main deck as well as to the structure in way of the drill well or moon pool, or other similar openings. Special attention is to be given to plating damages due to wave slam, impact resulting from surface craft or other causes.

Examination is to be made of the fore and aft structures, particularly of the supporting structures of rudder, line shafting, fixed or steerable nozzles.

2.2.7 For column stabilized units and TLP, examination is to be made of the lower hulls, columns and bracings, giving particular attention to the connections of columns to the upper and lower hulls and to the intersections between columns, bracings and diagonals.

Examination is to be made of the upper hull including girders, bulkheads, decks and stiffeners with particular attention being paid to areas subject to high local loadings, vibrations due to machinery or equipment or stress concentrations.

2.2.8 For self-elevating units, examination is to be made of the lower mats and spud cans, particularly of the connections with the legs.

Examination is to be made of the entire length of all legs, supplemented, if deemed necessary by the Surveyor, with non-destructive testing of sensitive areas. For truss legs, the examination is to include all chords with jacking racks and a representative percentage of vertical, horizontal and diagonal truss members to be selected with the agreement of the Surveyor.

Examination is to be made of the upper structure, particularly in way of jack houses, leg wells, substructure and skid beams, including the deck, side and bottom platings.

Table 1 : Requirements for internal and external examination of automatic air pipe heads at class renewal survey

Age of unit (in years at time of class renewal survey)		
age ≤ 5	5 < age ≤ 10	10 < age
Two air pipe heads, one port and one starboard, located on the exposed decks in the forward 0,25 L, preferably air pipes serving ballast tanks. See**(1)** and**(2)**	All air pipe heads located on the exposed decks in the forward 0,25 L. See**(1)** and**(2)**	All air pipe heads located on the exposed decks. See**(3)**
Two air pipe heads, one port and one starboard, on the exposed decks, serving spaces aft of 0,25 L, preferably air pipes serving ballast tanks. See**(1)** and**(2)**	At least 20% of air pipe heads on the exposed decks serving spaces aft of 0,25 L, preferably air pipes serving ballast tanks. See**(1)** and **(2)**	

(1) The selection of air pipe heads to be examined is left to the attending Surveyor.

(2) According to the results of this examination, the Surveyor may require the examination of other air pipe heads located on the exposed decks.

(3) Exemption may be considered for air pipe heads where there is substantiated evidence of replacement within the previous five years.

Note 1: For designs where the inner parts cannot be properly examined from outside, the examination is to include removal of the head from the air pipe.

Note 2: Particular attention is to be paid to the condition of the zinc coating in heads constructed from galvanised steel.

2.3 Internal spaces

2.3.1 Holds, 'tweendecks, cofferdams, pipe tunnels and duct keels, void spaces and other dry compartments which are integral to the hull structure are to be internally examined, ascertaining the condition of the structure, bilges and drain wells, sounding, venting, pumping and drainage arrangements

2.3.2 Machinery and boiler spaces, pump rooms and other spaces containing machinery are to be internally examined, ascertaining the condition of the structure. Particular attention is to be given to tank tops, shell plating in way of tank tops, brackets connecting side shell frames and tank tops, and bulkheads in way of tank tops and bilge wells. Particular attention is to be given to the sea suctions, sea water cooling pipes and overboard discharge valves and their connections to the shell plating. Where wastage is evident or suspected, thickness measurements are to be carried out, and renewals or repairs effected when wastage exceeds allowable limits.

Piping systems inside these spaces are to be dealt with according to [3.5].

2.3.3 Chain lockers are to be internally examined, while the anchor chains are ranged as required for the bottom survey in dry condition. The pumping arrangements of the chain locker is to be tested.

2.3.4 For column stabilized units, examination is to be made of bulkheads and internal stiffeners, of the lower hulls, columns and bracings, particular attention being given to the connections of the columns to the upper and lower hulls and to the intersections between columns, bracings and diagonals.

2.3.5 For TLP units, examination is to be made of bulkheads and internal stiffeners, of the lower hulls, columns and bracings, particular attention being given to the connections of the columns to the upper and lower hulls and to the intersections between columns, bracings and diagonals. In addition, tension legs upper connectors internal supporting structure are to be subject to close-up survey.

2.3.6 For self-elevating units, examination is to be made of the lower mats, spud cans and hull compartments, particularly of the connections with the legs to be non destructively tested if deemed necessary by the Surveyor.

Examination of cylindrical type legs includes the internal plating, vertical frames, bulkheads and ring stiffeners.

Examination is to be made of the upper structure, particularly in way of jack houses, leg wells, substructure and skid beams, including the deck, side and bottom platings, bulkheads, girders and internal stiffeners.

2.4 Tanks

2.4.1 The type and number of tanks to be internally examined at each class renewal survey are detailed in Tab 2, according to the age of the unit.

This internal examination is to ascertain the condition of the structure, bilges and drain wells, sounding, venting, pumping and drainage arrangements, including piping systems and their fittings. Due attention is to be given to plating or double plates below the lower end of sounding and suction pipes.

Where the inner surface of the tanks is covered with cement or other compositions, the removal of coverings may be waived provided they are examined, found sound and adhering satisfactorily to the steel structures.

Note 1: For examination of independent (non-structural) tanks, refer to [3.5.9].

Note 2: Due attention is also to be given to fuel oil piping passing through ballast tanks, which is to be pressure tested when the ship is more than 10 years old.

2.4.2 For salt water ballast spaces other than double bottom tanks, where a protective coating is found to be in poor condition, and is not renewed, where soft coating has been applied or where a protective coating has never been applied, i.e. neither at the time of construction nor thereafter, maintenance of class is to be subject to the spaces in question being internally examined at annual surveys. The Society may consider waiving such internal examination at annual surveys of tanks protected with soft coating, whose size is 12 m^3 or less.

For salt water ballast double bottom tanks, where such breakdown of coating is found and is not renewed, where soft coating has been applied or where a protective coating has never been applied, i.e. neither at the time of construction nor thereafter, maintenance of class may be subject to the tanks in question being internally examined at annual intervals.

2.4.3 Boundaries of double bottom, deep, ballast, peak and other tanks, both integral and independent tanks, including holds adapted for the carriage of salt water ballast, are to be tested with a head of liquid to the highest extent possible but not less than the highest point that liquid will rise under service condition.

Table 2 : Requirements for internal examination of integral (structural) tanks at class renewal survey

Tank	Age of unit (in years at time of class renewal survey)			
	age ≤ 5	5 < age ≤ 10	10 < age ≤15	age > 15
Peaks (all use)	all	all	all	all
Salt water ballast tanks (all types)	all	all	all	all
Fresh water	none	one	all	all
Fuel oil bunkertanks:				
• engine room	none	none	one	one
• storage area	none	one	two **(1)**	half, minimum 2**(1)**
Lubricating oil tanks	none	none	none	one
Storage tanks	all	all	all	all
Process tanks	all	all	all	all

(1) One deep tank is to be included, if fitted.
Note 1: Independent non-structural tanks are to be surveyed according to [3.5.9].
Note 2: The extent of the survey of tanks dedicated to liquids other than those indicated in this table will be considered by the Society on a case by case basis according to the nature of the liquids.
Note 3: If a selection of tanks is accepted to be examined, then different tanks are to be examined at each class renewal survey, on a rotational basis. Tanks not internally examined may be examined externally from accessible boundaries.

2.4.4 Boundaries of fuel oil, lube oil and fresh water tanks are to be tested with a head of liquid to the maximum filling level of the tank. Tank testing of fuel oil, lube oil and fresh water tanks may be specially considered based on a satisfactory external examination of the tank boundaries, and a confirmation from the Master stating that the pressure testing has been carried out according to the requirements with satisfactory results.

2.4.5 Other testing procedures, such as the procedure used for the initial survey during construction, may be accepted.

For integral tanks which are intended to contain liquid cargoes such as edible oil, the Surveyor may waive the requirement specified in [2.4.4] subject to a satisfactory internal examination.

2.5 Thickness measurements

2.5.1 The extent of thickness measurements is detailed below according to the age of the unit:

- Tab 3 for surface units
- Tab 4 for column stabilized units
- Tab 5 for TLP
- Tab 6 for self-elevating units.

Additionally, for any part of the unit where wastage is evident or suspect, the Surveyor may require thickness measurements in order to ascertain the actual thickness of the material.

2.5.2 When the structure is coated and the coating is found to be in good condition, the Surveyor may, at his discretion, accept a reduced programme of thickness measurements in the corresponding areas. Other effective protective arrangements may also be considered.

2.5.3 When thickness measurements indicate substantial corrosion, the number of thickness measurements is to be increased to determine the extent of substantial corrosion. Tab 7 may be used as guidance for additional thickness measurements.

2.5.4 Special attention is to be paid to free flooding structural members and sea water compartments.

2.6 Critical areas

2.6.1 Those critical areas shall be consider as all the special category elements highlighted on the structural categories drawing. They are located in way or at the vicinity of critical load transmission areas and/or of stress concentration locations.

2.6.2 Non-destructive testing of those area including welded connections shall be done as deemed necessary by the surveyor.

2.6.3 Example of critical area on Offshore unit:

- topside stool and internal reinforcement
- flare foundation
- crane pedestral
- riser support connection to the hull and internal reinforcement
- truster support
- mooring or tendon foundation and internal reinforcement
- casting use for structural purpose
- node of leg of jack-up
- interface between leg and unit.

2.7 Lightweight survey

2.7.1 A lightweight survey is to be carried out during each class renewal survey. The scope is given in Pt B, Ch 1, Sec 1, [3].

2.7.2 The Society may also require an inclining test to be carried out as specified in Pt B, Ch 1, Sec 1, [3].

2.7.3 For column-stabilized units, alternative to inclining test may be allowed, based on provisions of Pt B, Ch 1, Sec 1, [3].

2.7.4 For permanent units, alternative to inclining test may be allowed, based on provisions of Pt B, Ch 1, Sec 1, [3].

Table 3 : Requirements for thickness measurements at class renewal survey for surface units

<table>
<tr><th colspan="4">Age of unit (in years at time of class renewal survey)</th></tr>
<tr><th>age ≤ 5</th><th>5 < age ≤ 10</th><th>10 < age ≤15</th><th>age > 15</th></tr>
<tr><td>Suspect areas</td><td>Suspect areas</td><td>Suspect areas</td><td>Suspect areas</td></tr>
<tr><td rowspan="8"></td><td>Within the storage area or 0,5 L amidships:
- selected deck plates
- selected bottom plates
- selected tank top plates
- selected plates in splash zone (4)</td><td>Within the storage area or 0,5 L amidships:
- each deck plate
- selected tank top plates
- selected bottom plates
- selected plates in splash zone (4)</td><td>Within the storage area or 0,5 L amidships:
- each deck plate
- each tank top plate
- each bottom plate
- all plates in splash zone (4)</td></tr>
<tr><td>One transverse section abreast a cargo space within the amidships 0,5L(5)</td><td>Two transverse sections abreast of two different cargo spaces within the amidships 0,5L(5)</td><td>Three transverse sections in way of cargo spaces within the amidships 0,5L (3) (5)</td></tr>
<tr><td>Outside the storage area or 0,5 L amidships:
- selected deck plates
- selected bottom plates
- selected plates in splash zone (4)</td><td>Outside the storage area or 0,5 L amidships:
- selected deck plates
- selected bottom plates
- selected plates in splash zone (4)</td><td>- all exposed main deck plating full length
- representative exposed superstructure deck plating (poop, bridge and forecastle decks)
- all plates in splash zone(4)
- all keel plates full length
- all bottom plates in way of cofferdams, machinery space and aft end of tanks</td></tr>
<tr><td>Hatch covers and coamings of the two foremost cargo holds (1)</td><td colspan="2">All hatch covers and coamings (1)</td></tr>
<tr><td colspan="2">Collision bulkhead, forward machinery space bulkhead, aft peak bulkhead (1) (2)</td><td>All transverse and longitudinal bulkheads (plates and stiffeners) (1) (2)</td></tr>
<tr><td colspan="3">- sea water manifold in engine room
- plating of sea chests
- shell plating in way of overboard discharges as considered necessary by the attending Surveyor</td></tr>
<tr><td rowspan="2"></td><td>Internals in forepeak tank</td><td>Internals in forepeak and aft tanks</td></tr>
<tr><td colspan="2">Selected internal structure such as floors and longitudinals, transverse frames, web frames, deck beams, ‘tweendecks, girders, etc.
Measurements may be increased if the Surveyor deems it necessary</td></tr>
<tr><td colspan="4">(1) Including plates and stiffeners.
(2) Measurements may be waived or reduced after satisfactory visual examination, when such bulkheads form the boundaries of dry (void) spaces.
(3) The number of transverse sections may be reduced at the Surveyor’s discretion for units of length under 90 m.
(4) The splash zone includes areas around water line, for the range of working draughts.
(5) One being chosen in the vicinity of moon pool or other similar opening, if any.</td></tr>
</table>

Table 4 : Requirements of thickness measurements at class renewal survey (column stabilized units)

Age of the unit (years)			
age ≤ 5	5 < age ≤ 10	10 < age ≤ 15	age > 15
Suspect areas	Suspect areas	Suspect areas	Suspect areas
	In each main structural element of the floater (node, pontoon, column): • selected deck plates • 1 girth belt **(4)** • selected bottom plates	In each main structural element of the floater (node, pontoon, column): • selected deck plates • 2 girth belts **(4)** • selected bottom plates	In each main structural element of the floater (node, pontoon, column): • each deck plate • 3 girth belts **(4)** • each bottom plate
	In tanks: selected tank top plates	In tanks: selected tank top plates	In tanks: each tank top plate
	In upper hull/deck: • selected deck plates • 1 girth belt **(2) (3) (4)** • selected bottom plates	In upper hull/deck: • selected deck plates • 2 girth belts **(2) (3) (4)** • selected bottom plates	In upper hull/deck: • each deck plate • 3 girth belts **(2) (3) (4)** • each bottom plate
	Column and bracings: selected plates and stiffeners in splash zone **(1)**	Column and bracings: selected plates and stiffeners in splash zone **(1)**	Column and bracings: all plates and stiffeners in splash zone **(1)**
	Forward and aft machinery space bulkheads, peak bulkheads	Forward and aft machinery space bulkheads, peak bulkheads	All transverse and longitudinal bulkheads (plates and stiffeners)
		Selected internal structure such as floors and longitudinals, transverse frames, web frames, deck beams, etc.	Selected internal structure as for units with 10 < age ≤ 15, number of measurements may be increased as the Surveyor finds it necessary

(1) The splash zone includes areas around water line, for the range of working draughts.
(2) One being chosen in the vicinity of the connection with a column.
(3) One being chosen in the vicinity of moon pool or other similar openings, if any.
(4) For column stabilized unit, girth belt are transversal to the main structure. It is a section for pontoon. It is an elevation for column. It is a main framing for upper hull.

Table 5 : Requirements of thickness measurements at class renewal survey (TLP units)

Age of the unit (years)			
age ≤ 5	5 < age ≤ 10	10 < age ≤ 15	age > 15
Suspect areas	Suspect areas	Suspect areas	Suspect areas
	In floaters: • selected deck plates • 1 girth belt **(4)** • selected bottom plates	In floaters: • selected deck plates • 2 girth belts **(4)** • selected bottom plates	In floaters: • each deck plate • 3 girth belts **(4)** • each bottom plate
	In tanks: selected tank top plates	In tanks: selected tank top plates	In tanks: each tank top plate
	In upper hull/deck: • selected deck plates • 1 girth belt **(2) (3) (4)** • selected bottom plates	In upper hull/deck: • selected deck plates • 2 girth belts **(2) (3) (4)** • selected bottom plates	In upper hull/deck: • each deck plate • 3 girth belts **(2) (3) (4)** • each bottom plate
	Column and bracings: selected plates and stiffeners in splash zone **(1)**	Column and bracings: selected plates and stiffeners in splash zone **(1)**	Column and bracings: all plates and stiffeners in splash zone **(1)**
	Forward and aft machinery space bulkheads, peak bulkheads	Forward and aft machinery space bulkheads, peak bulkheads	All transverse and longitudinal bulkheads (plates and stiffeners)
	Tension legs upper connectors internal supporting structure	Selected internal structure such as floors and longitudinals, transverse frames, web frames, deck beams, etc.	Selected internal structure as for units with 10 < age ≤ 15, number of measurements may be increased as the Surveyor finds it necessary

(1) The splash zone includes areas around water line, for the range of working draughts.
(2) One being chosen in the vicinity of the connection with a column.
(3) One being chosen in the vicinity of moon pool or other similar openings, if any.
(4) For TLP, girth belt are transversal to the main structure. It is a section for pontoon. It is an elevation for column. It is a main framing for upper hull.

Table 6 : Requirements of thickness measurements at class renewal survey (self-elevating units)

Age of the unit (years)			
age ≤ 5	5 < age ≤ 10	10 < age ≤ 15	age > 15
Suspect areas	Suspect areas	Suspect areas	Suspect areas
	In upper pontoon: • selected deck plates • 1 transverse section **(1) (3)** • selected bottom plates • selected tank top plates machinery space bulkheads, other selected bulkheads	In upper pontoon: • selected deck plates • 2 transverse sections **(1) (3)** • selected bottom plates • selected tank top plates • machinery space bulkheads, other selected bulkheads • selected internal structure such as floors and longitudinals, frames, beams, etc.	In upper pontoon: • each deck plate • 3 transverse sections **(1) (3)** • each bottom plate • each tank top plate • all transverse and longitudinal • bulkheads (plates and stiffeners) • selected internal structure as for units with 10 < age ≤ 15, number of measurements may be increased as the Surveyor finds it necessary
	In truss legs: selected chords, bracings and other truss members in splash zone **(2)** and in the vicinity of mat or spud can	In truss legs: selected chords, bracings and other truss members in splash zone **(2)** and in the vicinity of mat or spud can	In truss legs: all chords, bracings and other truss members in splash zone **(2)** and in the vicinity of mat or spud can
	In cylindrical legs: selected plates and stiffeners in splash zone **(2)** and in the vicinity of mat or spud can	In cylindrical legs: selected plates and stiffeners in splash zone **(2)** and in the vicinity of mat or spud can	In cylindrical legs: all plates and stiffeners in splash zone**(2)** and in the vicinity of mat or spud can
	Mat and spud cans: selected plates and stiffeners	Mat and spud cans: selected plates and stiffeners	Mat and spud cans: all plates and stiffeners
	Forward and aft machinery space bulkheads, peak bulkheads	Forward and aft machinery space bulkheads, peak bulkheads	All transverse and longitudinal bulkheads (plates and stiffeners)
		Selected internal structure such as floors and longitudinals, transverse frames, web frames, deck beams, etc.	Selected internal structure as for units with 10 < age ≤ 15, number of measurements may be increased as the Surveyor finds it necessary

(1) One being chosen in the vicinity of moonpool or other similar opening, if any.
(2) The splash zone includes areas around water line, for the range of working draughts.
(3) One being chosen in the vicinity of a leg opening.

Table 7 : Guidance for additional thickness measurements in way of substantial corrosion areas

Structural member	Extent of measurements	Pattern of measurements
Plating	Suspect area and adjacent plates	5 point pattern over 1 square metre
Stiffeners	Suspect area	3 measurements each in line across web and flange

3 Machinery and systems

3.1 General

3.1.1 The survey items listed below are to be covered to the satisfaction of the Surveyor. However, other survey alternatives deemed equivalent by the Surveyor in relation to the characteristics and general condition of the unit concerned may also be accepted.

3.2 Main and auxiliary engines and turbines

3.2.1 General

Depending on the type of machinery, the following parts are to be opened up as necessary for inspection. Parts and components are to be pressure tested as appropriate or as deemed necessary by the Surveyor. A working test is also to be carried out, including testing of alarms and safety devices.

3.2.2 Internal combustion engines

a) Columns and entablature

b) Cylinders with their liners, cylinder covers (together with valves and valve gear), pistons with their rods, crossheads, slippers and guides (or gudgeon pins), connecting rods (with their top and bottom end bearings), control gear, driven scavenge pumps, driven air compressors, driven fuel pumps, supercharging blowers, fuel injection pumps, turning gear, etc.

c) Crankshafts (together with their main bearings)

d) Reverse gear, reduction gear and clutches, if fitted.

3.2.3 Steam turbines

a) Condensers and their cooling water and condensate extraction pumps

b) Casings and rotors (including their blading), impulse wheels (including guide blading and diaphragms), nozzles and nozzle boxes, journals and bearings, dummy pistons, labyrinths, external glands, etc.

c) Shafts, including their flexible couplings.

Where the propulsion steam turbines are of a well-known type, and fitted with rotor position indicators and vibration indicators of an approved type, as well as measuring equipment of steam pressure at proper locations along the steam flow, and the arrangements for change-over in the event of emergency operation of the plant are readily operable, the first class renewal survey may be limited to the examination of rotor bearings, thrust bearings and flexible couplings, provided the Surveyor is satisfied from operation service records and power trials subsequent to the survey, that the turbine plant is in good working condition.

3.2.4 Gas turbines

a) Casings, rotors and disks, impellers and blading of all turbines and compressors, combustion chambers, burners, heat exchangers, gas piping, compressed air piping with fittings, starting and reverse arrangements

b) Shafts and their flexible couplings.

3.2.5 Electric propulsion

Where the propulsion machinery consists of an electrical system, the propulsion motors, generators, cables and all ancillary electrical gear, exciters and ventilating plant (including coolers) associated therewith are to be examined and the insulation resistance to earth tested. Due attention is to be given to windings, commutations and sliprings. The operation of protective gear and alarm devices is to be checked, as far as practicable. Interlocks intended to prevent unsafe operations or unauthorised access are to be checked to verify that they are functioning correctly.

3.2.6 Thruster installations

When the unit is equipped with thruster installations, the class renewal survey is also to include:

- An examination of the machinery and electrical installation, as applicable.
- An external examination of the propulsive part of the installation to be carried out at the dry dock survey due as part of the class renewal survey. During this examination other checks such as clearance readings, tightness of hub and blade sealing for controllable pitch propellers are to be verified. Locking arrangements for bolts, if fitted, are to be checked. Results of lubricating oil analysis to detect possible deterioration of internal gears and bearings or the presence of water are to be confirmed as acceptable. The Manufacturer's requirements may be taken into account. Dismantling of the assembly for the examination of internal parts may be required if the foregoing checks are not satisfactory
- a running test of the system under operating conditions.

3.3 Reduction gears, main thrust and intermediate shaft(s)

3.3.1 Reduction gears complete with all wheels, pinions, shafts, couplings, bearings and gear teeth, including incorporated clutch arrangements, are to be opened up, as deemed necessary by the Surveyor, for visual inspection. For complicated assemblies, gears and roller bearings may be inspected without dismantling.

3.3.2 All shafts, thrust blocks and bearings are to be examined.

3.4 Pumps and other machinery items

3.4.1 General

The items listed in [3.4.2] are to be opened up, as deemed necessary by the Surveyor, for visual inspection. Their parts and components are to be pressure tested as appropriate and considered necessary by the Surveyor. A working test is also to be carried out, including testing of alarms and safety devices if deemed necessary by the Surveyor.

3.4.2 Items to be surveyed

a) Air compressors with their intercoolers, filters and/or oil separators and safety devices

b) Heat exchangers, ventilation fans for boilers and other equipment used for essential services

c) Piston pumps and centrifugal pumps for sea water, bilge and salt water ballast

d) Screw pumps, gear pumps and centrifugal pumps other than those listed in c) above (opening up is not required).

3.5 Systems in machinery spaces

3.5.1 Valves, cocks and strainers of the bilge and ballast systems are to be opened up, as deemed necessary by the Surveyor, for visual inspection, and, together with the piping and safety devices, examined and tested under working conditions.

3.5.2 The fuel oil, lubricating oil, hydraulic oil, thermal oil, and feed and cooling water systems, together with pressure filters, heaters and coolers used for essential services, are to be opened up and examined or tested, as considered necessary by the Surveyor. Safety devices for the foregoing items are to be examined.

3.5.3 The compressed air system together with its valves, fittings and safety devices is to be examined, as considered necessary by the Surveyor.

3.5.4 Compressed air receivers and other pressure vessels for essential services are to be cleaned internally and examined internally and externally. Their fittings, valves and safety devices are to be opened up, as deemed necessary by the Surveyor, for visual inspection and pressure tested as appropriate.

3.5.5 Steel pipes for superheated steam having a temperature of the steam at the superheater outlet exceeding 450°C are to be examined and tested in accordance with [3.5.7] to [3.5.8] at each class renewal survey.

3.5.6 Steel pipes for saturated steam or superheated steam having a temperature of the steam at the superheater outlet not exceeding 450°C are to be examined and tested in accordance with [3.5.7] to [3.5.8] at each class renewal survey for units over 5 years of age. When the unit is 5 years of age or less, the inspection may be limited to a check of the satisfactory general condition of pipes.

3.5.7 The examination and hydrostatic test of steel pipes for main steam machinery, and steel pipes for auxiliary steam machinery having internal diameter 75 mm and over, are to be carried out on a number of pipes selected by the Surveyor after the lagging in way is removed.

3.5.8 Representative pipe lengths connected with bolted flanges are to be internally and externally examined, and hydrostatically tested to 1,1 times the working pressure at ambient temperature. Bolts and butt-welded joints between flanges and pipes are to be submitted to a non-destructive test for crack detection.

3.5.9 Non-structural tanks located in machinery spaces are to be externally examined; the relevant fittings, with particular regard to the remote control shut-off valves under hydrostatic head, are to be externally examined to check the efficiency of manoeuvres and the absence of cracks or leakage.

3.5.10 When the unit is equipped with a refrigerating plant, the class renewal survey is to include:

- examination and test at the design pressure of the parts of the plant under pressure
- for refrigerating machinery spaces using ammonia as refrigerant:
  - examination and test of the water-spraying fire-extinguishing system to the same extent as indicated in [3.8.3] item d)
  - examination of valves and pumps of the bilge system to the same extent as indicated in [3.4]
  - examination and test of the electrical equipment to the same extent as indicated in [3.6.11]
  - test of the gas detection system.

3.6 Electrical equipment and installations

3.6.1 An electrical insulation resistance test is to be performed on the electrical equipment and cables. If needed, for the purpose of this test, the installation may be subdivided or equipment which may be damaged disconnected.

3.6.2 The following minimum values, when performing the insulation test, are to be considered:

- For main and emergency switchboards, feeder circuit breakers being open, busbar circuit closed, measuring and monitoring instruments disconnected, the resistance of insulation measured across each insulated busbar and the hull, and across insulated busbars, should not be less than 1 megohm
- For generators, the equipment and circuits normally connected between the generator and the first circuit breaker being connected, the resistance of insulation (preferably at working temperature whenever possible), in ohms, is to be greater than 1 000†times the rated voltage, in volts. If appropriate, the Surveyor checks also that the insulation resistance of generators separate exciter gear is not less than 250 000 ohms
- The insulation resistance of the entire electrical system is to be checked with all circuit breakers and protective devices closed, except for generators; in general, the resistance should not be less than 100 000 ohms.

  However, the variation of the resistance with time is to be checked, comparing the current figure with previous readings. If the insulation resistance was to drop suddenly or be insufficient, the defective circuits are to be traced, disconnecting the circuits as much as necessary.

3.6.3 The prime movers of generators are to be surveyed in accordance with [3.2] and their governors tested. All generators are to be presented for inspection, clean and with covers opened and examined under working conditions.

3.6.4 Main and emergency switchboards, section boards and distribution boards are to be cleaned and doors or covers opened for examination of their fittings. The condition of overcurrent protective devices and fuses is to be checked. Circuit-breakers of generators are to be tested, as far as practicable, to verify that protective devices including preference tripping relays, if fitted, operate satisfactorily. The tightening of busbar connections is to be checked.

3.6.5 Electrical cables and cable runs are to be examined at random, in particular in places where deterioration is likely to occur; terminal boxes of essential services are also to be subjected to a random check.

3.6.6 The motors and starters concerning essential services together with associated control and switchgear are to be examined and, if considered necessary by the Surveyor, checked, as far as practicable, under working conditions.

3.6.7 Navigation light indicators are to be tested under working conditions, and correct operation on the failure of supply or failure of navigation lights verified.

3.6.8 The emergency sources of electrical power, their automatic arrangements and associated circuits are to be tested.

3.6.9 Emergency lighting, transitional emergency lighting, supplementary emergency lighting, general emergency alarm and public address systems are to be tested as far as practicable.

3.6.10 The visible condition of electrical equipment and installations is also to be checked as regards precautions against shock, fire and other hazards of electrical origin.

3.6.11 A general examination of the electrical equipment in areas where there may be flammable gas or vapour and/or combustible dust is to be carried out to ensure that the integrity of the electrical equipment of a safety type has not been impaired owing to corrosion, missing bolts, etc., and that there is not an excessive build-up of dust on or in dust-protected electrical equipment. Cable runs are to be examined for sheath and armouring defects, where practicable, and to ensure that the means of supporting the cables are in satisfactory condition. The proper condition of bonding straps for the control of static electricity is to be checked. Alarms and interlocks associated with pressurised equipment or spaces are to be tested for correct operation.

Note 1: Owners are reminded that maintenance, repairs or renewal of certified electrical equipment of a safe type remains their responsibility or that of their representatives.

3.7 Controls

3.7.1 Where remote and/or automatic controls, not covered by an additional class notation related to automated installation, are fitted for essential machinery, they are to be tested to demonstrate that they are in satisfactory condition.

3.8 Safety instrument, Gas and Fire detection, protection and extinction

3.8.1 The Owner or his representative is to declare to the attending Surveyor that no significant changes have been made to the arrangement of structural fire protection.

Note 1: Attention is drawn to the provisions of Ch 1, Sec 1, [3.1.1] regarding compliance with any additional and/or more stringent requirements issued by the Administration of the State whose flag the ship is entitled to fly.

3.8.2 The class renewal survey of gas and fire prevention arrangements is to cover the following items.

a) visible parts of items forming part of structural fire protection arrangements in accommodation spaces and in machinery spaces such as bulkheads, decks, doors, stairways, crew and service lift trunks, and light and air trunks are to be examined, due attention being given to their integrity and that of the insulating material

b) the operation of manual/automatic fire doors, where fitted, is to be checked

c) remote controls for stopping fans and machinery and shutting off fuel supplies in machinery spaces and, where fitted, remote controls for stopping fans in accommodation spaces and means of cutting off power to the galley are to be tested

d) closing arrangements of ventilators, funnel annular spaces, skylights, doorways and tunnels, where applicable, are to be tested

e) gas and/or Fire and/or smoke detection and alarm systems are to be tested.

3.8.3 The survey requirements for all types of fire-fighting systems that are usually found on board units related either to machinery spaces or to storage areas and/or spaces or to accommodation spaces, irrespective of the service notation assigned, are the following:

a) Water fire system:

- the associated pumps are to be opened up and examined at the Surveyor's discretion
- the fire main is to be hydrostatically tested to the working pressure at the Surveyor's discretion.

b) Fixed gas fire-extinguishing system:

Receivers of CO_2 (or other gas) fixed fire-extinguishing systems are to be externally examined together with all stationary fittings and devices. In addition, the following applies:

- the total loss of CO_2 is not to exceed 10% of the installed quantity (5% for Halon)
- after being repaired or discharged, containers are to be subjected to a hydrostatic test
- hydrostatic testing of high pressure CO_2 containers is to be carried out at intervals not exceeding 10 years; the number of the tested containers is to be not less than 10% of the total number
- low pressure CO_2 containers are to be internally inspected if the content has been released and the container is older than five years; depending upon the result of the internal examination, the Surveyor may require the container to be hydrostatically tested.

It is to be checked that the distribution pipework is proved clear.

c) Sprinkler system:

- the associated pumps are to be opened up and examined at the Surveyor's discretion.

d) Water spraying system:

- the associated pumps are to be opened up and examined at the Surveyor's discretion
- a working test is to be carried out as far as reasonable and appropriate.

e) Fixed foam systems (low or high expansion):

- the associated pumps are to be opened up and examined at the Surveyor's discretion.

f) Dry powder system:

- it is to be verified that the propelling inert gas bottles have been hydrostatically tested. The same applies to bottles disembarked for refilling or embarked for replacement.

3.8.4 As far as other fire-fighting equipment is concerned, the following items are to be hydrostatically tested, at intervals not exceeding 10 years:

- any CO_2 bottles of extinguishers
- shells of foam extinguishers
- shells of powder extinguishers
- air or gas bottles associated with fire extinguishers whose shells are not kept under pressure (if internally examined, the test need not be performed).

3.8.5 Where a helideck is fitted, the following is to be checked, as far as appropriate:

- drainage arrangements around the landing area
- fire fighting appliances and arrangements (to be surveyed as per [3.8.3] and [3.8.4], according to the equipment installed)
- other arrangements for helicopter refuelling and hangar facilities (fuel system, ventilation, fire protection and detection).

3.9 Other systems

3.9.1 For units including piping systems containing corrosive substances, such as not degassed drilling mud, the survey includes:

- examination of corresponding gauging devices, high level alarms, valves associated with overflow control and gas detectors
- confirmation that the remote operation of the corresponding pump room bilge is satisfactory
- confirmation that corresponding pump room rescue arrangements are in order
- confirmation that corresponding ventilation system is satisfactory.

3.9.2 For self-elevating units, the Surveyor satisfies himself of the condition of the leg jacking systems including pinions, gears, wedges, locking pins, brakes and their powering sources, or other mechanisms for self-elevation and for leg securing (rack choke), that they are surveyed, opened up as deemed necessary and functionally tested.

Electrical equipment for the jacking system is to be externally examined, opened up if deemed necessary and functionally tested.

3.9.3 For TLP, tensioning system is to be checked according to the specification.

Section 5 Scope of Surveys for Offshore Drilling Units

1 General

1.1 Application

1.1.1 The requirements apply to all mobile offshore drilling units after their construction, which have been assigned one of the following service notations:

- **offshore ship - drilling**
- **offshore barge - drilling**
- **column stabilized unit - drilling**
- **self-elevating unit - drilling**

Note 1: The Society reserves the right to apply the requirements of this Section to non-drilling offshore units.

1.1.2 The requirements apply to surveys of the hull, structure, equipment, and machinery subject to classification.

1.1.3 The thickness measurement requirements for renewal surveys have been incorporated into Tab 1 to Tab 4.

1.1.4 Prior to the commencement of any part of the class renewal survey and intermediate survey, a survey planning meeting is to be held between the attending Surveyor(s), the Owner's representative in attendance and the thickness measurement company representative, where involved.

1.2 Definition

1.2.1 Ballast tank

A ballast tank is a tank which is used primarily for salt water ballast.

1.2.2 Preload tank

A preload tank is a tank within the hull of a self-elevating unit. These tanks are periodically filled with salt water ballast and used to preload the footings of the unit prior to commencing drilling operations. Preload tanks are considered equivalent to ballast tanks.

1.2.3 Spaces

Spaces are separated compartments.

1.2.4 Coating condition

Coating condition is defined as follows:

- GOOD condition with only minor spot rusting
- FAIR condition with local breakdown at edges of stiffeners and weld Connections and/or light rusting over 20% or more of areas under consideration, but less than as defined for POOR condition
- POOR condition with general breakdown of coating over 20% or more of areas or hard scale at 10% or more of areas under consideration

1.2.5 Close-up survey

A close-up survey is a survey where the details of structural components are within the close visual inspection range of the surveyor i.e. normally within reach of hand.

1.2.6 Girth Belt

A transverse section (girth belt) includes all continuous longitudinal members such as plating, longitudinals and girders at a given section of the unit.

For columns of column stabilized units and TLP, the girth belt may be considered as an horizontal section including continuous vertical members suchs as plating, vertical stiffners and vertical girders.

1.2.7 Representative spaces

Representative spaces are those which are expected to reflect the conditions of other spaces of similar type and service and with similar corrosion prevention systems. When selecting representative spaces, account is to be taken of the service and repair history on board and identifiable critical structural areas and/or suspect areas.

1.2.8 Critical structural area

Critical structural areas are locations which have been identified from calculations to require monitoring or from the service history of the subject unit or from similar units or sister units, if applicable, to be sensitive to cracking, buckling or corrosion which would impair the structural integrity of the unit.

1.2.9 Suspect area

Suspect areas are locations showing substantial corrosion and/or are considered by the Surveyor to be prone to rapid wastage.

1.2.10 Substantial corrosion

Substantial corrosion is an extent of corrosion such that assessment of corrosion pattern indicates a wastage in excess of 75% of allowable margins, but within acceptable limits.

1.2.11 Excessive diminution

Excessive diminution is an extent of corrosion beyond allowable limits.

1.2.12 Corrosion prevention system

A corrosion prevention system is normally considered a full hard protective coating.

Hard protective coating is usually to be epoxy coating or equivalent. Other coating systems, which are neither soft nor semi-hard coatings, may be considered acceptable as alternatives provided that they are applied and maintained in compliance with the manufacturer's specifications.

1.2.13 Prompt and thorough repair

A prompt and thorough repair is a permanent repair completed at the time of survey to the satisfaction of the Surveyor, therein removing the need for the imposition of any associated condition of classification.

1.2.14 Special consideration

Special consideration or specially considered (in connection with close-up surveys and thickness measurements) means sufficient close-up inspection and thickness measurements are to be taken to confirm the actual average condition of the structure under the coating.

1.2.15 Propulsion assist

Propulsion assist are non-self-propelled units fitted with thrusters intended to assist in manoeuvring or propelling while under tow.

1.3 Repairs

1.3.1 Any damage in association with wastage over the allowable limits (including buckling, grooving, detachment or fracture), or extensive areas of wastage over the allowable limits, which affects or, in the opinion of the Surveyor, will affect the unit's structural, watertight or weathertight integrity, is to be promptly and thoroughly repaired (see [1.2.13]).

For locations where adequate repair facilities are not available, consideration may be given to allow the unit to proceed directly to a repair facility. This may require temporary repairs for the intended voyage.

1.3.2 Additionally, when a survey results in the identification of structural defects or corrosion, either of which, in the opinion of the Surveyor, will impair the unit's fitness for continued service, remedial measures are to be implemented before the unit continues in service.

1.3.3 Where the damage mentioned in [1.3.1] is isolated and of a localised nature which does not affect the unit's structural integrity, consideration may be given by the Surveyor to allow an appropriate temporary repair to restore watertight or weather tight integrity and impose a condition of class with a specific time limit.

2 Annual survey

2.1 Schedule

2.1.1 Annual surveys are to be held within 3 months before or after each anniversary date from the date of the initial classification survey or the completion for the last class renewal survey.

2.2 Scope

2.2.1 The survey consists of an examination for the purpose of verifying, as far as practicable, that the hull, structure, equipment, and machinery are maintained in accordance with the applicable rule requirements.

2.3 Annual survey - Hull, structure and equipment

2.3.1 At each annual survey the exposed parts of the hull, deck, deck house, structures attached to the deck, derrick substructure, including supporting structure, accessible internal spaces, and the applicable parts listed in [2.3.4] to [2.3.7] are to be generally examined and placed in satisfactory condition as found necessary.

2.3.2 The Surveyors are to be satisfied at each annual survey that no material alterations have been made to the unit, its structural arrangements, subdivision, superstructure, fittings, and closing appliances upon which the stability calculations or the load line assignment is based.

2.3.3 Suspect areas identified at previous surveys are to be examined. Thickness measurements are to be taken of the areas of substantial corrosion and the extent of thickness measurements is to be increased to determine areas of substantial corrosion. Tab 4 may be used as guidance for these additional thickness measurements. These extended thickness measurements are to be carried out before the annual survey is credited as completed.

2.3.4 All drilling units

The following items are to be examined:

- Accessible hatchways, manholes and other openings.
- Machinery casings and covers, companionways, and deck houses protecting openings.
- Portlights together with deadcovers, cargo ports and similar openings in hull sides, ends, or in enclosed superstructures.
- Ventilators, tank vent pipes together with flame screens, and overboard discharges from enclosed spaces.
- Watertight bulkheads and end bulkheads of enclosed superstructures.
- Closing appliances for all the above, including hatchcovers, doors, together with their respective securing devices, dogs, sill, coamings and supports.
- Freeing ports together with bars, shutters and hinges.
- Windlass and attachment of anchor racks and anchor cables.
- Protection of the crew, guard rails, lifelines, gangways, and deck houses accommodating crew.

2.3.5 Surface type units

In addition to the requirements of [2.3.4] the following items are to be examined:

The hull and deck structure around the drilling well (moon-pool) and in vicinity of any other structural changes in section, slots, steps, or openings in the deck or hull and the back-up structure in way of structural members or sponsons connecting to the hull.

2.3.6 Self elevating units

In addition to the requirements of [2.3.4] the following items are to be examined:

- jack-house structures and attachments to upper hull or platform
- jacking or other elevating systems and leg guides, externally
- legs as accessible above the waterline
- plating and supporting structure in way of leg wells.

2.3.7 Column stabilized units and TLP

In addition to the requirements of [2.3.4] the following items are to be examined:

Columns, diagonal and horizontal braces together with any other parts of the upper hull supporting structure as accessible above the waterline.

Note 1: At the 1st annual survey after construction, column stabilized and self elevating units may be subject to examination of major structural components including non-destructive testing, as deemed necessary by the Society. If the Society deems such survey to be necessary, the extent should be agreed to by the Society and the Owner or operator prior to commencement of the survey.

2.4 Annual survey - Machinery

2.4.1 Self propelled units

A general examination of main and auxiliary engines, boilers, steering machinery, pumps, pipings, electrical installation including those in hazardous areas, and fire extinguishing systems is to be carried out.

2.4.2 Non-self propelled units

A general examination of items required for classification such as auxiliary machinery, pumps, piping, electrical installation in hazardous areas and fire extinguishing systems is to be carried out.

2.4.3 Units with propulsion-assist or dynamic positioning

Propulsion-assist and dynamic positioning equipment should be surveyed on the basis of annual survey - machinery.

2.5 Annual survey - Electrical equipment

2.5.1 A general examination of electrical machinery, the emergency sources of electrical power, the switchgear, and other electrical equipment, including operation of same is to be carried out. The operation of the emergency sources of power, including their automatic operation, is to be confirmed as far as practicable.

2.6 Annual survey - Shipboard automatic and remote control systems

2.6.1 A general examination of the automatic and remote-control system is to be made to the Surveyor's satisfaction. The machinery-space fire-detection and bilge water-level alarms are to be tested to confirm satisfactory operation.

2.7 Annual survey - Special features

2.7.1 A general examination of hazardous areas, remote shutdown arrangements, fire fighting systems, self-elevating systems, piping systems, and bilge systems is to be made.

3 Intermediate survey

3.1 Schedule

3.1.1 Intermediate surveys are to be held within 3 months before or after the second anniversary date, or within three months before or after the third anniversary date, after completion of the previous class renewal survey.

The Intermediate survey may replace the annual survey due on the second or the third anniversary date, after completion of the previous class renewal survey.

3.2 Scope

3.2.1 The intermediate survey is to include, in addition to the requirements as outlined in Article [2], examination and checks on a sufficiently extensive part of the structure to show that the structures of the unit are in satisfactory condition so that the unit is expected to operate until the end of the current period of class, provided that the unit is properly maintained and other surveys for maintenance of class are duly carried out during this period.

3.2.2 The examinations of the hull are to be supplemented by thickness measurements, if considered necessary by the surveyor, and testing as required, to verify the structural integrity. The aim of the examination is to discover excessive diminution, substantial corrosion, significant deformation, fractures, damages or other structural deterioration, that may be present.

3.2.3 The intermediate survey is to include examination of underwater parts as outlined in Article [7].

3.3 Ballast spaces

3.3.1 General

In conjunction with drydocking surveys (or equivalent) after class renewal survey No.1 and between subsequent class renewal surveys, the ballast spaces mentioned in [3.3.2] to [3.3.5] are to be internally examined, thickness gauged if considered necessary by the Surveyor, placed in satisfactory condition as found necessary, and reported upon. If such examination reveals no visible structural defects, the examination may be limited to a verification that the corrosion prevention arrangements remain effective.

3.3.2 All units

Particular attention is to be given to corrosion prevention systems in ballast spaces, free-flooding areas and other locations subjected to sea water from both sides.

3.3.3 Surface type units

One peak tank and at least two other representative ballast tanks between the peak bulkheads used primarily for water ballast are to be examined by the attending Surveyor in accordance with [3.3.1].

3.3.4 Self-elevating units

Representative ballast tanks or free-flooding compartments in mat or spud cans, if accessible, and at least two representative hull pre-load tanks are to be examined by the attending Surveyor in accordance with [3.3.1].

3.3.5 Column stabilized units and TLP

Representative ballast tanks in footings, lower hulls, or free-flooding compartments as accessible, and at least two ballast tanks in columns or upper hull, if applicable are to be examined by the attending Surveyor in accordance with [3.3.1].

3.4 Critical areas

3.4.1 Examination will be made of particularly critical areas of the structure such as:

- inside of bracings for semi-submersible units
- leg-hull connection of self-elevating units
- structure around corners of moon pool or other large openings
- other critical areas, as found necessary by the Surveyor.

3.5 Electrical equipment in hazardous areas

3.5.1 In addition to annual surveys [2.5] to [2.7], electrical equipment in hazardous areas will be examined and tested, with particular attention to:

- protective earthing
- integrity of flame-proof enclosures
- integrity of pressurised enclosures and associated fittings
- condition of increased safety equipment
- condition of cabling (damage to outer sheath, corrosion or metal braiding)
- interlocking systems of electrical power supply to spaces protected by air locks such as electric motors rooms, storage control rooms
- operation of pressurised equipment and functioning of alarms.

4 Class renewal survey

4.1 Schedule

4.1.1 Class renewal surveys of hull, structure, equipment, and machinery are to be carried out at 5 year intervals to renew the Classification Certificate(s).

4.1.2 The first class renewal survey is to be completed within 5 years from the date of the initial classification survey and thereafter within 5 years from the credited date of the previous class renewal survey. Extensions of class beyond the 5th year may be granted in exceptional circumstances. In this case the next period of class will start from the expiry date of the class renewal survey before the extension was granted.

4.1.3 For survey completed within 3 months before the expiry date of the class renewal survey, the next period of class will start from the expiry date of the class renewal survey. For survey completed more than three months before the expiry date of the class renewal survey, the period of class will start from the survey completion date.

4.1.4 The class renewal survey may be commenced at the 4th annual survey and be progressed with a view to completion by the 5th anniversary date. When the class renewal survey is commenced prior to the 4th annual survey, the entire survey is to be completed within 15 months if such work is to be credited to the class renewal survey.

4.1.5 A survey planning meeting is to be held prior to the commencement of the survey.

4.1.6 When considered necessary by the Society the interval between class renewal surveys may be reduced.

4.1.7 Class renewal survey requirements of units of unusual design, in lay-up or in unusual circumstances will be determined on an individual basis.

4.1.8 At the request of the Owner, and upon the Society's approval of the proposed arrangements, a system of continuous survey may be undertaken whereby the class renewal survey requirements are carried out in regular rotation to complete all the requirements of the particular class renewal survey within a five year period. Any defects that may affect classification found during the survey, are to be reported to the Society and dealt with to the satisfaction of the Surveyor.

4.2 Scope

4.2.1 The class renewal surveys shall include, in addition to surveys outlined in Article [2], the following examinations, tests, and checks of sufficient extent to verify that the hull, structure, equipment, and machinery are in satisfactory condition in compliance with the applicable Rule requirements for the new period of class of 5 years to be assigned, subject to proper maintenance and operation and the periodical surveys carried out at the due dates.

4.2.2 The examinations of the hull are to be supplemented by thickness measurements and testing as required, to verify the structural integrity. The aim of the examination is to discover excessive diminution, substantial corrosion, significant deformation, fractures, damages or other structural deterioration, that may be present.

4.2.3 The class renewal survey is to include examination of underwater parts as outlined in Article [7].

Table 1 : Minimum requirements for thickness measurements for surface-type units at class renewal survey

Age of unit (in years at time of class renewal survey)			
age ≤ 5	5 < age ≤ 10	10 < age ≤15	age > 15
Suspect areas	Suspect areas	Suspect areas	Suspect areas
	One transverse section of deck plating abreast the moon pool opening within the amidships 0.6L, together with internals in way as deemed necessary. Where unit is configured with side ballast tanks, the plating and internals of the tanks are also to be gauged in way of the section chosen	Two transverse sections (Girth Belts) of deck, bottom and side plating abreast the moon pool and one hatch opening within the amidships 0,6L together with internals in way as deemed necessary. Where unit is configured with side ballast tanks, the plating and internals of the tanks to be gauged in way of the required belts, Remaining internals in ballast tanks to be gauged as deemed necessary	A minimum of three transverse sections (Girth Belts) of deck, bottom, side, and longitudinal-bulkhead plating in way of the moon pool and other areas within the amidships 0,6L, together with internals in way (including in perimeter ballast tanks, where fitted in way of belts)
	Moon pool boundary bulkhead plating	Moon pool boundary bulkhead plating	Moon pool boundary bulkhead plating
		Internals in forepeak tank and aft peak tank as deemed necessary	Internals in forepeak and after peak tanks as deemed necessary
			Lowest strake of all transverse bulkheads in hold spaces. Remaining bulkhead plating to be gauged as deemed necessary
			All plates in two wind and water strakes, port and starboard, full length
			All exposed main deck plating full length and all exposed first-tier super-structure deck plating (poop, bridge and forecastle decks
			All keel plates full length plus additional bottom plating as deemed necessary by the Surveyor, particularly in way of cofferdams and machinery spaces
			Duct keel or pipe tunnel plating or pipe tunnel plating and internals as deemed necessary
			Plating of sea chests. Shell plating in way of overboard discharges as considered necessary by the attending surveyor

Note 1: Thickness measurement locations are to be selected to provide the best representative sampling of areas likely to be most exposed to corrosion, considering ballast history and arrangement and condition of protective coatings.

Note 2: Thickness measurements of internals may be specially considered by the Surveyor if the hard protective coating is in GOOD condition.

Note 3: For units less than 100 meters in length, the number of transverse sections required at class renewal survey No.3 may be reduced to one (1), and the number of transverse sections required at subsequent class renewal surveys may be reduced to two (2).

Note 4: For units more than 100 meters in length, at class renewal survey No.3, thickness measurements of exposed deck plating within amidship 0,5 L may be required.

4.3 Class renewal survey No.1 - Hull structure and equipment

4.3.1 All drilling units

The following parts are to be examined:

a) The hull or platform structure including tanks, watertight bulkheads and deck, cofferdams, void spaces, sponsons, chain lockers, duct keels, helicopter deck and its supporting structure, machinery spaces, peak spaces, steering gear spaces, and all other internal spaces are to be examined externally and internally for damage, fractures, or excessive diminution. Thickness gauging of plating and framing may be required where wastage is evident or suspected.

b) All tanks, compartments and free-flooding spaces throughout the drilling unit are to be examined externally and internally for excess wastage or damage.

c) Internal examinations of spud cans and mats may be specially considered.

d) Watertight integrity of tanks, bulkheads, hull, decks and other compartments is to be verified by visual inspection.

e) Suspect areas and critical structural areas should be examined and may be required to be tested for tightness, non-destructive tested or thickness gauged.

f) All primary and special application structures and identified critical structural areas are to be subjected to close up survey. Primary application structures are structural elements essential to the overall integrity of the unit. Special application structures are those portions of primary structural elements which are in way of critical load transfer points, stress concentrations, etc.

g) Tanks and other normally closed compartments are to be ventilated, gas freed and cleaned as necessary to expose damages and allow meaningful examination and thickness gauging in case of excessive diminution.

h) Internal examination and testing of void spaces, compartments filled with foam or corrosion inhibitors, and tanks used only for lube oil, light fuel oil, diesel oil, fresh water, drinking water or other non-corrosive products may be waived provided that upon a general examination the Surveyor considers their condition to be satisfactory. External thickness gauging may be required to confirm corrosion control.

i) Structures such as derrick substructure and supporting structure, jack-houses, deck houses, superstructures, helicopter landing areas, raw water (sea water intake) towers and their respective attachments to the deck or hull.

j) Windlass and attachments of anchor racks and anchor cable fairleads.

k) Foundations and supporting headers, brackets, and stiffeners for drilling related apparatus, where attached to hull, deck, superstructure or deck house.

l) Thickness gaugings are to be carried out where wastage is evident or suspect.

m) Where provided, the condition of corrosion prevention system of ballast tanks is to be examined. Where a hard protective coating is found in POOR condition and it is not renewed, where soft or semi-hard coating has been applied, or where a hard protective coating was not applied from time of construction, the tanks in question are to be examined at a frequency determined by the classification society. Thickness measurements are to be carried out as deemed necessary by the Surveyor.

n) Thickness measurements are to be carried out in accordance with Tab 1, Tab 2 or Tab 3 as applicable.

The Surveyor may extend the thickness measurements as deemed necessary. When thickness measurements indicate substantial corrosion, the extent of thickness measurements is to be increased to determine areas of substantial corrosion.

Tab 4 may be used as guidance for these additional thickness measurements. These extended thickness measurements are to be carried out before the survey is credited as completed.

4.3.2 Surface type units

In addition to the requirements of [4.3.1] the following items are to be examined:

Structural appendages and ducts for positioning units.

4.3.3 Self-elevating units

Primary applications structures are:

a) External plating of cylindrical legs.

b) Plating of all components of lattice type legs.

c) Combination of bulkhead, deck, side and bottom plating within the upper hull which form "Box" or "I" type main supporting structure.

d) Jack-house supporting structure and bottom footing structure which receives initial transfer of load from legs.

e) Internal bulkheads, shell and deck of bottom mat supporting structure which are designed to distribute major loads, either uniform or concentrated, into the mat structure.

Special application structures are:

a) Vertical columns in way of intersection with the mat structure.

b) Intersections of lattice type leg structure which incorporate novel construction, including the use of steel castings.

In addition to the requirements of [4.3.1] the following items are to be examined:

- All legs, including chords, diagonal and horizontal braces, gussets, racks, joints, together with leg guides. Tubular or similar type legs are to be examined externally and internally, together with internal stiffeners and pinholes as applicable.
- Structure in, around and under jack-house and leg wells. Non-destructive testing of these areas may be required.
- Leg jacking or other elevating systems externally.
- Leg connections to bottom mats or spud cans, including non-destructive testing of leg connections to mats or spud cans.
- Jetting piping systems or other external piping, particularly where penetrating mats or spud cans.
- Spud cans or mats. Where the spud cans or mat are partly or entirely obscured below the mud line where the class renewal survey is otherwise being completed, consideration may be given to postponement of the examinations until the next Rig move.

Table 2 : Minimum requirements for thickness measurements for self-elevating units at class renewal survey

Age of the unit (years)			
age ≤ 5	5 < age ≤ 10	10 < age ≤ 15	age > 15
Suspect areas (particular attention to be paid to the legs in way of the Splash Zone	Suspect areas	Suspect areas	Suspect areas
	Legs in way of Splash Zone	Legs in way of Splash Zone	Legs in way of Splash Zone
	Primary application structures where wastage is evident	Representative gaugings, throughout, of special and primary application structures	Comprehensive gaugings, throughout, of special and primary application structures
	Representative gaugings of upper hull deck and bottom plating and internals of one preload (ballast) tank	Leg well structure	Leg well structure
		Representative gaugings of deck, bottom, and side shell plating of hull and mat	Representative gaugings of deck, bottom, and side shell plating of hull and mat
		Representative gaugings of upper hull deck and bottom plating and internals of at least two preload (ballast) tanks	Substructure of derrick as deemed necessary
			Representative gaugings of internals of all preload (ballast) tanks
Note 1: Structural application designation (Special, Primary, Secondary) are defined in [4.3.1] and [4.3.3].			

4.3.4 Column stabilized units and TLP

Primary application structures are:

a) External shell structure of vertical columns, lower and upper hulls, and diagonal and horizontal braces.

b) Deck plating, heavy flanges, and bulkhead within the upper hull or platform which form "Box" or "I" type supporting structure which do not receive major concentrated loads.

c) Bulkheads, flats or decks and framing which provide local re-inforcement or continuity of structure in way of intersections except areas where the structure is considered special application.

Special application structures are:

a) External shell structure in way of intersections of vertical columns, decks and lower hulls.

b) Portions of deck plating, heavy flanges, and bulkheads within the upper hull or platform which form "Box" or "I" type supporting structure which receive major concentrated loads.

c) Major intersections of bracing members.

d) External brackets, portions of bulkheads, flats, and frames which are designed to receive concentrated loads at intersections of major structural members.

e) “Through” material used at connections or vertical columns, upper platform decks, and upper or lower hulls which are designed to provide proper alignments and adequate load transfer.

In addition to the requirements of [4.3.1] the following items are to be examined:

- Connections of columns and diagonals to upper hull, structure or platform and lower hull, structure or pontoons.
- Joints of supporting structure including diagonals, braces and horizontals, together with gussets and brackets.
- Internal continuation or back-up structure for the above.
- Non-destructive examination of these areas may be required.

4.4 Class renewal survey No.2 and subsequent class renewal surveys - Hull, structure and equipment

4.4.1 These surveys are to be at least as comprehensive as class renewal survey No.1, with special attention being given to the condition and thickness of material in high corrosion areas. Representative gaugings will be required as per Tab 1 to Tab 4. Special attention should be paid to splash zones on structure, legs or related structure, and in ballast tanks, pre-load tanks, free-flooding spaces, spud cans and mats.

Table 3 : Minimum requirements for thickness measurements for column-stabilized and TLP units at class renewal survey

Age of the unit (years)			
age ≤ 5	5 < age ≤ 10	10 < age ≤ 15	age > 15
Suspect areas	Suspect areas	Suspect areas	Suspect areas
Columns and bracings where wastage is evident in Splash Zone	Representative gaugings of columns and bracings in Splash Zone together with internals in way as deemed necessary	Representative gaugings, throughout, of special and primary application structures	Comprehensive gaugings, throughout, of special and primary application structures
	Special and primary application structure where wastage is evident	One Transverse Section (Girth Belt) of each of 2 columns and 2 bracings in Splash Zone together with internals in way as deemed necessary	One Transverse Section (Girth Belt) of each of one-half of the columns and bracings in Splash Zone and internals in way as deemed necessary (i.e., gauge half of the unit's columns and bracings in Splash Zone).
		Lower hulls in way of mooring lines where wastage is evident	Lower hulls in way of mooring lines where wastage is evident
		One Transverse Section (Girth Belt) of each lower hull between one set of columns	One Transverse Section (Girth Belt) of each lower hull between one set of columns
			Representative gaugings of substructure of drilling derrick
Note 1: Structural application designation (Special, Primary, Secondary) are defined in [4.3.1] and [4.3.4].			

Table 4 : Guidance for additional thickness measurements in way of substantial corrosion

Structural member	Extent of measurement	Pattern of measurement
Plating	Suspect area and adjacent plates	5 point pattern over 1 square meter
Stiffeners	Suspect area	3 measurements each in line across web and flange

4.5 Class renewal surveys - Machinery

4.5.1 General

Machinery installations of all types of units are to undergo class renewal surveys at intervals consistent with the class renewal survey of the hull, in order that both may be recorded concurrently.

4.5.2 Non-self-propelled units

In addition to the requirements for annual surveys, at each class renewal survey, special attention is to be given to the following items as applicable:

- All openings to the sea, including sanitary and other overboard discharges, together with cocks and valves connected therewith are to be examined internally and externally while the unit is in drydock, or at the time of underwater examination in lieu of drydocking, and the fastenings to the shell plating are to be renewed when considered necessary by the Surveyor.
- Pumps and pumping arrangements, including valves, cocks, pipes and strainers are to be examined. Non-metallic flexible expansion pieces in the main salt water circulating system are to be examined internally and externally. The Surveyor is to be satisfied with the operation of the bilge and ballast systems. Other systems are to be tested as considered necessary.
- The foundations of machinery are to be examined.
- Heat exchangers and other unfired pressure vessels within the scope of classification are to be examined, opened up or thickness gauged and pressure tested as considered necessary, and associated relief valves proved operable. Evaporators that operate with a vacuum on the shell need not be opened, but may be accepted on basis of satisfactory external examination and operational test or review of operating records.

4.5.3 Self-propelled units

In addition to the requirements for non-propelled units, the main and auxiliary propulsion machinery, including associated pressure vessels should be surveyed. In addition, examination of the steering machinery is to be carried out, including an operational test and checking or relief-valve settings. The machinery may be required to be opened for further examination as considered necessary by the Surveyor.

4.5.4 Units with propulsion - Assist or dynamic position

Propulsion-assist and dynamic positioning equipment should be surveyed on the basis of class renewal survey - Machinery.

4.6 Class renewal survey - Electrical equipment

4.6.1 In addition to the requirements for annual surveys, at each class renewal survey, special attention is to be given to the following items as applicable:

- Fittings and connections on main switchboards and distribution panels are to be examined, and care is to be taken to see that no circuits are overfused.
- Cables are to be examined as far as practicable without undue disturbance of fixtures.
- All generators are to be run under load, either separately or in parallel. Switches and circuit breakers are to be tested.
- All equipment and circuits are to be inspected for possible development of physical changes or deterioration. The insulation resistance of the circuits is to be measured between conductors and between conductors and ground and these values compared with those previously measured.
- Electrical auxiliaries installed for vital purposes, generators and motors are to be examined and their prime movers opened for inspection. The insulation resistance of each generator and motor is to be measured.
- The windings of main propulsion generators and motors are to be thoroughly examined and found or made dry and clean. Particular attention is to be paid to the ends of all windings of stators and rotors.
- Emergency power systems are to be examined and tested.

4.7 Class renewal survey - Shipboard automatic and remote control systems

4.7.1 In addition to the requirements of annual surveys the following parts are to be examined:

- Control actuators:

  All mechanical, hydraulic, and pneumatic control actuators and their power systems are to be examined and tested as considered necessary.
- Electrical equipment:

  The insulation resistance of the windings of electrical control motors or actuators is to be measured, with all circuits of different voltages above ground being tested separately to the Surveyor's satisfaction.
- Unattended plants:

  Control systems for unattended machinery spaces are to be subjected to dock trials at reduced power on the propulsion engine to verify the proper performance of all automatic functions, alarms, and safety systems.

4.8 Class renewal survey - Special features (all types)

4.8.1 General

Mobile offshore drilling units may have many items of machinery and electrical equipment not found on conventional vessels. Certain of these items are required for classification even if the unit is without propulsion machinery. Items to be especially examined and reported upon at all surveys are as given in [4.8.2] to [4.8.7].

4.8.2 Hazardous areas

Enclosed hazardous areas such as those containing open active mud tanks, shale shakers, degassers and desanders are to be examined and doors and closures in boundary bulkheads verified as effective. Electric lighting, electrical fixtures, and instrumentation are to be examined, proven satisfactory and verified as explosion-proof or intrinsically safe. Ventilating systems including ductwork, fans, intake and exhaust locations for enclosed restricted areas are to be examined, tested and proven satisfactory. Ventilating air alarm systems to be proven satisfactory. Electrical motors are to be examined including closed-loop ventilating systems for large D-C motors. Automatic power disconnect to motors in case of loss of ventilating air is to be proved satisfactory.

4.8.3 Remote shutdown arrangements

Remote shutdown for fuel-oil transfer service pumps and ventilating equipment, together with oil tank outlet valves where required to be capable of being remotely closed are to be proved satisfactory. Emergency switch(s) for all electrical equipment including main and emergency generators, except alarm and communication systems and lighting in vital areas such as escape routes and landing platforms, are to be proved satisfactory.

4.8.4 Fire fighting systems

A general examination of the fire detection and extinguishing systems is to be made in order that the Surveyor may be satisfied with its efficient state. The following items are to be especially examined:

- fire hoses, nozzles, and spanners at each fire station
- servicing of all portable extinguishers
- weighing and re-charging as necessary of all dry chemical and CO_2 extinguishers
- fire pumps and piping including operation and capacity
- alarm systems including fire and gas detection.

4.8.5 Self-elevating systems

On self elevating type mobile offshore drilling units, the elevating systems are to be examined and reported on. Pinions and gears of the climbing pinion gear train of rack and pinion systems are to be examined, as far as practicable, to the Surveyor's satisfaction by an effective crack detection method.

4.8.6 Piping systems

Piping systems used solely for drilling operations and complying either with the Society's requirements or a recognized standard are to be examined, as far as practical, operationally or hydrostatically tested to working pressure, to the satisfaction of the Surveyor.

4.8.7 Miscellaneous

Bilge alarm systems, if fitted, to be tested.

5 Continuous Survey (CS)

5.1 General

5.1.1 Definitions, description and schedule for continuous surveys are given in Ch 2, Sec 1, [4.3].

5.2 Scope

5.2.1 When the unit is under the continuous survey system for hull or machinery, the scope of the class renewal survey as described in [4]is carried out on a continuous basis over the period of class.

6 Alternative

6.1

6.1.1 As an alternative to the renewal and intermediate surveys provided for in Articles [4] and [3] respectively, the Society may, at the Owner's request, approve a continuous survey programme provided that the extent and frequency of the surveys are equivalent to renewal and intermediate surveys. A copy of the continuous survey programme, together with the record of the surveys, should be kept on board the unit.

7 Survey of the outside of unit’s bottom (bottom survey) and related items

7.1 Schedule

7.1.1 There is to be a minimum of two examinations of the outside of the unit's bottom and related items during each five-year class renewal survey period. One such examination is to be carried out in conjunction with the class renewal survey. In all cases the interval between any two such examinations is not to exceed 36 months. For units operating in salt water for less than six (6) months each year, the survey interval may be increased by the Society.

7.1.2 Consideration may be given at the discretion of the Society, to any special circumstances justifying an extension of the interval.

7.1.3 Proposals for alternative means of examining the unit's bottom and related items while afloat may be considered, provided they are in general agreement with [7.3].

7.2 Parts to be examined

7.2.1 Surface-type units

- External surfaces of the hull, keel, stem, stern frame, rudder, nozzles, and sea strainers are to be selectively cleaned to the satisfaction of the attending Surveyor and examined together with appendages, the propeller, exposed parts of stern bearing assembly, rudder pintle and gudgeon securing arrangements, sea chest and strainers, and their fastenings.
- Propeller shaft bearing, rudder bearing, and steering nozzle clearances are to be ascertained and recorded.

7.2.2 Self-elevating units

- External surfaces of the upper hull or platform, spud cans, mat, underwater areas of legs, together with their connections as applicable, are to be selectively cleaned to the satisfaction of the attending Surveyor and examined.
- At each drydocking survey or equivalent, after class renewal survey No.2, the Surveyor is to be satisfied with the condition of the internal structure of the mat or spud cans. Leg connections to mat and spud cans are to be examined at each drydock survey or equivalent. Non-destructive testing may be required of areas considered to be critical by the Society or found to be suspect by the Surveyor.

7.2.3 Column-stabilized units and TLP

External surfaces of the upper hull or platform, footings, pontoons and columns from lower hulls, underwater areas of columns, nodes and pontoons, bracing and their connections, sea chests, and propulsion units as applicable, are to be selectively cleaned and examined to the satisfaction of the attending Surveyor. Non-destructive testing may be required of areas considered to be critical by the Society or found to be suspect by the Surveyor.

7.3 Specific requirements for in-water survey in lieu of drydocking survey for mobile offshore drilling units

7.3.1 General

Following are the procedures and conditions under which a properly conducted in-water inspection may be credited as equivalent to a drydocking survey for a mobile offshore drilling unit.

Note 1: Attention is drawn to the requirements of the additional class notation **INWATERSURVEY** which may be considered

7.3.2 Conditions

a) Limitations

Underwater inspection in lieu of drydocking survey may not be acceptable where there is record of abnormal deterioration or damage to the underwater structure; or where damage affecting the fitness of the unit is found during the course of the survey.

b) Thickness gauging and non-destructive testing

Underwater means of internal thickness measurements of suspect areas may be required in conjunction with the underwater inspection. Means for underwater non-destructive testing may also be required for fracture detection.

c) Plans and data

Plans and procedures for the drydocking survey (underwater inspection) are to be submitted for review in advance of the survey and made available on board. These should include drawings or forms for identifying the areas to be surveyed, the extent of underwater cleaning, non-destructive testing locations (including NDT methods), nomenclature, and for the recording of any damage or deterioration found.

d) Underwater conditions

The in-water visibility and the cleanliness of the hull below the waterline is to be clear enough to permit a meaningful examination which allows the surveyor and diver and/or ROV pilot to determine the condition of the plating, appendages and the welding. The Classification Society is to be satisfied with the methods of orientation of the divers/ROVs on the plating, which should make use where necessary of permanent markings on the plating at selected points. Overall or spot cleaning may be required.

7.3.3 Physical features

a) General

The physical features mentioned in items b) to e) are to be incorporated into the unit's design in order to facilitate the underwater inspection. When verified they will be noted in the unit's classification for reference at subsequent surveys.

b) Stern bearing

For self-propelled units, means are to be provided for ascertaining that the seal assembly on oil-lubricated bearings is intact and for verifying that the clearance or wear-down of the stern bearing is not excessive. For use of the wear-down gauges, up-to-date records of the base

depths are to be maintained on board. Whenever the stainless-steel seal sleeve is renewed or machined, the base readings for the wear-down gauge are to be re-established and noted in the vessel's records and in the survey report.

c) Rudder bearings

For self-propelled units with rudders, means and access are to be provided for determining the condition and clearance of the rudder bearings, and for verifying that all parts of the pintle and gudgeon assemblies are intact secure. This may require bolted access plates and a measuring arrangement.

d) Sea suctions

Means are to be provided to enable the diver to confirm that the sea suction openings are clear. Hinged sea suction grids would facilitate this operation.

e) Sea valves

For the drydocking survey (underwater inspection) associated with the class renewal survey, means must be provided to examine any sea valve.

7.3.4 Procedures

a) Exposed areas

An examination of the outside of the structure above the waterline is to be carried out by the Surveyor. Means and access are to be provided to enable the Surveyor to accomplish visual inspection and non-destructive testing as necessary.

b) Underwater areas

An examination of the entire unit below the waterline is to be carried out by an approved service supplier. (Refer to NR533 Approval of Service Suppliers.)

c) Damage areas

Damage areas are to be photographed. Internal examination, measurements, marking and thickness measurements of such locations may be necessary as determined by the attending Surveyor. Means are to be provided for location, orienting and identifying underwater surfaces in photographs or on video tapes.

7.3.5 Alternatives

The Society is prepared to consider alternatives to the above guidelines including remotely operated vehicles, provided means and details for accomplishing results are not less effective.

8 Items related to drilling equipment

8.1 Application

8.1.1 The requirements given in present Section for drilling equipment are additional to those given in the relevant Sections of the present Chapter.

8.2 Annual survey and class renewal survey

8.2.1 The survey will consist of:

- Confirmation to be obtained that no new drilling equipment has been installed without previous notification to the Society.
- Verification of the structural supports of drilling equipment. Special attention is to be paid to heavy equipment foundations and pipe rack.
- Verification of the structural condition of the moonpool area, drill floor and derrick substructure. The condition of these with respect to mechanical damages and corrosion is to be examined.
- Verification of fire extinguishing/deluge systems for drill floor and well testing area. Verification of alarms, warnings and release arrangements.
- Checking of the availability of eye wash station and emergency shower in close proximity in the mud mixing area.
- Checking, as far as practicable, of the alarm activation in manned control rooms due to loss of pressurisation of high pressure equipment.
- General visual examination of the condition of high pressure equipment and piping. Check for absence of damages or excessive corrosion.
- Review of the records of inspections and tests of safety valves.
- Checking of the conditions of insulation of hot surfaces.

9 Propulsion system surveys (propeller shaft surveys)

9.1 General

9.1.1 Definitions, scope and schedule for propulsion system surveys are given in the following Rules parts:

- Ch 2, Sec 1, [5.4] of the present Rules
- Pt A, Ch 2, Sec 2, [5.5] of Ship Rules
- Pt A, Ch 3, Sec 5 of Ship Rules.

9.2 Extension of intervals of propeller shaft surveys

9.2.1 Surveys are to be carried out in accordance with the Rules of the Society, except that in the case of mobile offshore drilling unit, due to low running hours on propeller shafts, extended intervals between propeller shaft surveys may be considered based on:

- Satisfactory diver's external examination of stern bearing and outboard seal area including weardown check as far as is possible.
- Internal examination of the shaft area (inboard seals) in propulsion room(s).
- Confirmation of satisfactory lubricating oil records (oil loss rate, contamination).
- Examination/replacement of shaft seal elements in accordance with seal manufacturer's recommendations.

9.3 Other propulsion systems

9.3.1 Driving components serving the same purpose as the propeller shaft in other propulsion systems, such as directional propellers, vertical axis propellers, water jet units, dynamic positioning systems and thruster assisted mooring systems, are to be submitted to periodical surveys at intervals not exceeding five years.

10 Boilers survey

10.1 General

10.1.1 Definitions, extent and schedule for boiler surveys are given in the following Rules parts:

- Ch 2, Sec 1, [5.5] of the present Rules
- Pt A, Ch 2, Sec 2, [5.6] of Ship Rules.
- Pt A, Ch 3, Sec 6 of Ship Rules.

10.2 Scope

10.2.1 At each boiler survey the boilers, superheaters, and economizers are to be examined internally (water-steam side) and externally (fire side).

10.2.2 Boiler mountings and safety valves are to be examined at each boiler survey and opened as considered necessary by the Surveyor.

10.2.3 The proper operation of the safety valves is to be confirmed at each survey.

10.2.4 When considered necessary by the Surveyor, the boilers and superheaters are to be subjected to hydrostatic pressure test.

11 Survey preplanning and record keeping

11.1 General

11.1.1 Requirements for survey preplanning and record keeping are given in [4.1].

11.2 Survey programme

11.2.1 A specific survey programme for renewal surveys and special continuous surveys must be worked out in advance of the renewal survey by the Owner in cooperation with the Classification Society. The survey programme shall be in written format.

11.3 Plans and procedures

11.3.1 Plans and procedures for survey of the outside of the unit's bottom and related items are to be submitted for review in advance of the survey and made available on board. These should include drawings or forms for identifying the areas to be surveyed, the extent of hull cleaning, non-destructive testing locations (including NDT methods), nomenclature, and for the recording of any damage or deterioration found. Submitted data, after review by the Society, will be subject to revision if found to be necessary in light of experience.

12 Occasional surveys

12.1 General

12.1.1 Definitions, procedures and requirements for occasional surveys (including damage, repairs, alterations and welding and replacement of materials) are given in the following Rules parts:

- Ch 2, Sec 1, [6] of the present Rules
- Pt A, Ch 2, Sec 2, [6] of Ship Rules.

12.2 Lay-up and reactivation surveys

12.2.1 When the classification society is notified by the Owner that a unit has been laid-up, this status will be noted in the vessel's survey status and surveys falling due during lay-up may then be held in abeyance until the vessel reactivates, at which time they are to be brought up-to-date.

12.2.2 Units which have been laid up and are returning to active service, regardless of whether the Classification Society has been previously informed that the vessel has been in lay-up, a reactivation survey is required. The requirements for the reactivation survey are to be specially considered in each case, having due regard being given to the status of surveys at the time of the commencement of lay-up, the length of the lay-up period and the conditions under which the vessel has been maintained during that period.

12.3 Damage survey

12.3.1 It is the responsibility of the Owner/operator of the unit to report to the Society without delay any damage, defect or breakdown, which could invalidate the conditions for which a classification has been assigned so that it may be examined at the earliest opportunity by the Society's Surveyor(s). All repairs found necessary by the Surveyor are to be carried out to his satisfaction.

12.4 Repairs

12.4.1 Where repairs to hull, legs, columns or other structures, machinery or equipment, which affect or may affect classification, are planned in advance to be carried out, a complete repair procedure including the extent of proposed repair and the need for Surveyors attendance is to be submitted to and agreed upon by the Society reasonably in advance. Failure to notify the Society, in advance of the repairs, may result in suspension of the unit's classification until such time as the repair is redone or evidence submitted to satisfy the Surveyor that the repair was properly carried out. This applies also to repairs during voyage or on site.

12.4.2 The above is not intended to include maintenance and overhaul to hull, other structures, machinery and equipment in accordance with recommended manufacturers procedures and established marine practice and which does not require Society approval; however, any repair as a result of such maintenance and overhauls which affects or may affect classification is to be noted in the units log and submitted to the Surveyor.

12.5 Alterations

12.5.1 No alterations which may affect classification are to be made to the hull or machinery of a classed unit unless plans of proposed alterations are submitted and approved by the Society before the work of alterations is commenced. Such work is to be carried out in accordance with approved plans and tested on completion as required by the Rules and to the satisfaction of the Surveyor.

12.6 Welding and replacement of materials

12.6.1 Welding of steels, including high strength structural steel, is to be to the satisfaction of the Society.

12.6.2 Welding or other fabrication performed on steels of special characteristics or repairs or renewals of such steel or in areas adjacent to such steel is to be accomplished with procedures approved by the Society considering the special materials involved. Substitution of steels differing from those originally installed is not to be made without approval by the Society.

12.6.3 The Society may reference IACS Recommendations No.11 - "Materials Selection Guideline for Mobile Offshore Drilling Units" when considering suitable replacement materials.

13 Preparation for survey

13.1 Conditions for survey

13.1.1 Requirements for preparations and conditions for surveys are given in Pt A, Ch 2, Sec 2, [2.5] of Ship Rules.

13.2 Access to structures

13.2.1 Requirements for access to structures are given in Pt A, Ch 2, Sec 2, [2.6] of Ship Rules.

13.2.2 For survey, means are to be provided to enable the surveyor to examine the hull structure in a safe and practical way.

13.2.3 For survey in void compartments and water ballast tanks, one or more of the following means for access, acceptable to the Surveyor, is to be provided:

- permanent staging and passages through structures
- temporary staging and passages through structures
- lifts and movable platforms
- boats or rafts
- other equivalent means.

13.3 Equipment for survey

13.3.1 Requirements for equipment for surveys are given in Pt A, Ch 2, Sec 2, [2.7] of Ship Rules.
Reference should also be made to NR533 Approval of Service Suppliers.

13.3.2 Thickness measurement is normally to be carried out by means of ultrasonic test equipment. The accuracy of the equipment is to be proven to the Surveyor as required.
Thickness measurements are to be carried out by an approved service supplier.

13.3.3 One or more of the following fracture detection procedures may be required if deemed necessary by the Surveyor:

- radiographic equipment
- ultrasonic equipment
- magnetic particle equipment
- dye penetrant
- other acceptable NDT Techniques.

13.4 Survey offshore or at anchorage

13.4.1 Guidelines for use of boats or rafts for close-up surveys are given in Pt A, Ch 2, Sec 2, [2.5] of Ship Rules.

13.4.2 Survey offshore or at anchorage may be accepted provided the Surveyor is given the necessary assistance from the personnel onboard.

13.4.3 A communication system is to be arranged between the survey party in the tank or space and the responsible officer on deck. This system must also include the personnel in charge of ballast pump handling if boats or rafts are used.

13.4.4 When boats or rafts are used, appropriate life jackets are to be available for all participants. Boats or rafts are to have satisfactory residual buoyancy and stability even if one chamber is ruptured. A safety checklist is to be provided.

13.4.5 Surveys of tanks by means of boats or rafts may only be undertaken at the sole discretion of the Surveyor, who is to take into account the safety arrangements provided, including weather forecasting and ship response in reasonable sea conditions.

Section 6 Additionnal Surveys Related to Storage Area of Oil Storage Units

1 General

1.1 Application

1.1.1 The requirements of this Section apply after construction to all oil storage units, with or without production installations on board, which have been assigned one of the following notations:

offshore ship - oil storage

offshore barge - oil storage

1.1.2 The requirements for hull surveys apply to the surveys of the hull structure and piping systems in way of storage tanks, process tanks integral to the hull, pump rooms, cofferdams, pipe tunnels and void spaces within the storage area and all salt water ballast tanks. They are additional to the requirements applicable to the remainder of the unit, given in Ch 2, Sec 2 to Ch 2, Sec 4 according to the relevant surveys. For survey of inert gas installations, refer to Ch 2, Sec 9.

1.1.3 The requirements contain the minimum extent of examination, thickness measurements and tank testing. When substantial corrosion and/or structural defects are found, the survey is to be extended and is to include additional close-up surveys when necessary.

1.1.4 Prior to the commencement of any part of the class renewal survey and intermediate survey, a survey planning meeting is to be held between the attending Surveyor(s), the Owner’s representative in attendance and the thickness measurement company representative, where involved.

1.1.5 The requirements for machinery surveys apply to surveys of the machinery and equipment in the storage area or dedicated to storage service systems and are additional to those given in Ch 2, Sec 2 to Ch 2, Sec 4 for all units.

1.2 Documentation on board

1.2.1 The Owner is to supply and maintain documentation on board as specified in [1.2.2] and [1.2.3], which is to be readily available for examination by the Surveyor. The documentation is to be kept on board for the lifetime of the unit.

1.2.2 A survey report file is to be a part of the documentation on board consisting of:

- reports of structural surveys
- thickness measurement reports.

The survey report file is also to be available in the Owner's management office.

1.2.3 The following additional supporting documentation is to be available on board:

- main structural plans of crude oil storage and ballast tanks
- previous repair history
- crude oil and ballast history
- extent of use of inert gas system and tank cleaning procedures
- ship’s personnel reports on:
  - structural deterioration/defects in general
  - leakage in bulkheads and piping systems
  - condition of coatings or cathodic protection system, if any
- any other information that may help to identify suspect areas requiring inspection.

1.2.4 Prior to survey, the Surveyor examines the documentation on board and its contents, which are used as a basis for the survey.

1.2.5 The data and information on the structural condition of the unit collected during the survey are evaluated for acceptability and structural integrity of the unit’s storage area.

1.2.6 When a survey is split between different survey stations, a report is to be made for each portion of the survey. A list of items examined and/or tested (pressure testing, thickness measurements, etc.) and an indication of whether the item has been credited are to be made available to the next attending Surveyor(s), prior to continuing or completing the survey.

2 Annual survey - Hull items

2.1 Weather decks

2.1.1 The survey is to include the:

- examination of crude oil storage tank openings, including gaskets, covers, coamings and screens
- examination of crude oil storage tank pressure/vacuum valves and flame screens
- examination of flame screens on vents to all bunker, oily ballast and slop tanks and void spaces, as far as practicable
- examination of crude oil, crude oil washing, bunker, ballast and vent piping systems, including remote control valves, safety valves and various safety devices, as well as vent masts and headers
- confirmation that wheelhouse doors and windows, sidescuttles and windows in superstructure and deckhouse ends facing the storage area are in satisfactory condition.

2.2 Crude oil storage pump rooms

2.2.1 The survey is to include the:

- examination of all pump room bulkheads for signs of oil leakage or fractures and, in particular, the sealing arrangements of penetrations in these bulkheads
- examination of the condition of all piping systems.

2.3 Ballast tanks

2.3.1 Ballast tanks are to be internally examined when required as a consequence of the results of the class renewal survey or the intermediate survey.

2.3.2 For units above 15 years of age, all ballast tanks adjacent to (i.e. with a common plane boundary) a storage tank with any means of heating, where such heating is confirmed to be in use, are to be internally examined. For single sided units, tanks or areas in tanks where coating was found to be in GOOD condition at the previous intermediate or class renewal survey may be specially considered by the Society. For double sided units, ballast tanks which were found, at the previous intermediate or class renewal survey, to have no substantial corrosion within the tank and which were found in compliance with either of the following conditions:

- coating in GOOD condition, or
- coating of the common boundary, including adjacent structures, in GOOD condition and the coating of the remaining parts of the tank in FAIR condition

may be specially considered by the Society.

2.3.3 When considered necessary by the Surveyor, thickness measurements are to be carried out and if the results indicate that substantial corrosion is present, the extent of the measurements is to be increased in accordance with Tab 6 or Tab 7 for double sided units These extended thickness measurements are to be carried out before the survey is credited as completed.

Suspect areas identified at previous class renewal surveys are to be examined.

Areas of substantial corrosion identified at previous class renewal or intermediate survey are to have thickness measurements taken.

3 Annual survey - Crude oil storage machinery items

3.1 Storage area and crude oil pump rooms

3.1.1 The Owner or his representative is to declare to the attending Surveyor that no modifications or alterations which might impair safety have been made to the various installations in dangerous zones without prior approval from the Society.

The survey is to include the:

- confirmation that potential sources of ignition in or near the crude oil pump rooms, such as loose gear, excessive product in bilge, excessive vapours, combustible materials, etc., are eliminated and that access ladders are in satisfactory condition
- examination, as far as practicable, of crude oil, bilge, ballast and stripping pumps for excessive gland seal leakage, verification of proper operation of electrical and mechanical remote operating and shutdown devices and operation of the pump room bilge system, and checking that pump foundations are intact
- confirmation that the ventilation system, including portable equipment, if any, of all spaces in the storage area (including crude oil pump rooms) is operational, ducting is intact, dampers are operational and screens are clean
- confirmation that electrical equipment in dangerous zones, crude oil pump rooms and other spaces is in satisfactory condition and has been properly maintained
- confirmation that the remote operation of the crude oil pump room bilge system is satisfactory
- examination of the heating system
- examination of the storage arrangement and confirmation that the unit's storage hoses are suitable for their intended purpose and in satisfactory condition
- confirmation that any special arrangement made for bow or stern loading/unloading is in satisfactory condition and test of the means of communication and remote shutdown of the crude oil pumps.

3.2 Instrumentation and safety devices

3.2.1 The survey is to include the:

- examination of crude oil storage tank gauging devices, high level alarms and valves associated with overflow control
- verification that installed pressure gauges on crude oil discharge lines are properly operational
- confirmation that the required gas detection instruments are on board and satisfactory arrangements have been made for the supply of any required vapour detection tubes
- confirmation that devices provided for measuring the temperature of the crude oil, if any, operate satisfactorily.

3.3 Fire-fighting systems in storage area

3.3.1 The survey is to include the:

- external examination of piping and cut-out valves of fixed fire-fighting systems related to crude oil storage tanks and crude oil pump rooms,
- confirmation, as far as practicable and when appropriate, that the remote means for closing the various openings are operable,
- examination of the appropriate portable fire-extinguishing equipment,
- examination of fire-fighting systems of any type fitted on board such as deck foam, water-spraying, etc., as applicable.

4 Intermediate survey - Hull items

4.1

4.1.1 The survey of weather decks is to include the:

- examination, as far as applicable, of crude oil, crude oil washing, bunker, ballast, steam and vent piping systems as well as vent masts and headers. If upon examination there is any doubt as to the condition of the piping, pressure testing, thickness measurement or both may be required
- confirmation that storage pipes are electrically bonded to the hull
- examination of vent line drainage arrangements.

4.1.2 The requirements for survey of salt water ballast tanks given in Tab 1 or Tab 2 for double sided units are to be complied with.

Table 1 : Intermediate survey of crude oil storage and salt water ballast tanks for single hull

Age of unit (in years at time of intermediate survey)	
5 < age ≤ 10	10 < age
Overall survey of one peak tank and at least two representative salt water ballast tanks between the peak bulkheads used primarily for water ballast, including combined oil storage/ballast tanks, where fitted, are to be internally examined and selected by the attending Surveyor. See **(1)**, **(2)**, **(3)** and **(4)**	
	Close-up survey in salt water ballast tanks of: • all web frame rings in a wing tank • one deck transverse in each remaining tank • both transverse bulkheads (complete) in a wing tank • one transverse bulkhead (lower part) in each remaining tank See **(5)** and **(6)**
Thickness measurements of those areas found to be suspect areas at the previous class renewal survey See **(7)**	Thickness measurements of those areas found to be suspect areas, at the previous class renewal survey. See **(8)**. Areas of substantial corrosion identified at the previous class renewal or intermediate survey are to have thickness measurements taken. Suspect areas identified at previous class renewal surveys are to be examined.
(1) If such survey reveals no visible structural defects, then the examination may be limited to verification that the protective coating remains efficient. **(2)** Where poor coating condition, corrosion or other defects are found in salt water ballast tanks or where a protective coating has never been applied i.e. neither at the time of construction nor thereafter, the examination is to be extended to other ballast tanks of the same type. **(3)** In salt water ballast tanks, where a protective coating is found to be in poor condition, and is not renewed, where soft coating has been applied, or where a protective coating has never been applied i.e. neither at the time of construction nor thereafter, the tanks in question are to be internally examined and thickness measurement carried out as considered necessary at annual surveys. **(4)** The representative spaces are to be based on the record of the previous class intermediate surveys, previous class renewal surveys, the repair history of the tanks and they should not be the same for each intermediate survey. **(5)** The extent of close-up surveys may be increased in accordance with the requirements in [6.3.3]. **(6)** For areas in tanks where protective coating and cathodic protection is found to be in good condition, the extent of close-up survey may be specially considered. **(7)** Where substantial corrosion, is found, the extent of thickness measurements is to be increased in accordance with the requirements in Tab 6. **(8)** Where substantial corrosion, is found, the extent of thickness measurements is to be increased in accordance with the requirements in Tab 6. These extended thickness measurements are to be carried out before the survey is credited as completed.	

Table 2 : Intermediate survey of crude oil storage and salt water ballast tanks for double sided units

Age of unit (in years at time of class renewal survey)	
5 < age ≤ 10	10 < age
Overall survey of one peak tank and at least two representative salt water ballast tanks between the peak bulkheads used primarily for water ballast, including combined oil storage/ballast tanks, where fitted, are to be internally examined and selected by the attending Surveyor. See **(1)**, **(2)**, **(3)** and **(4)**	
	Close-up survey in salt water ballast tanks of: • all web frames **(9)** in one complete tank **(8)** • the knuckle area **(10)** and the upper part (5 meters approximately) of one web frame in each remaining ballast tank • one transverse bulkhead **(11)** in each complete tank **(8)** See **(5)** and **(6)**
Thickness measurements of those areas found to be suspect areas at the previous class renewal survey See **(7)**	Thickness measurements of those areas found to be suspect areas at the previous class renewal survey. See **(12)**. Areas of substantial corrosion, identified at the previous class renewal or intermediate survey are to have thickness measurements taken. Suspect areas identified at previous class renewal surveys are to be examined.

(1) If such survey reveals no visible structural defects, then the examination may be limited to verification that the protective coating remains efficient and that the sacrificial anodes, if any, are less than 50% depleted.

(2) Where poor coating condition, corrosion or other defects are found in salt water ballast tanks or where a protective coating has never been applied i.e. neither at the time of construction nor thereafter, the examination is to be extended to other ballast tanks of the same type.

(3) In salt water ballast tanks, where a protective coating is found to be in poor condition, and is not renewed, where soft coating has been applied, or where a protective coating has never been applied i.e. neither at the time of construction nor thereafter, the tanks in question are to be internally examined and thickness measurement carried out as considered necessary at annual surveys.

(4) The representative spaces are to be based on the record of the previous class intermediate surveys, previous class renewal surveys, the repair history of the tanks and they should not be the same for each intermediate survey.

(5) The extent of close-up surveys may be increased in accordance with the requirements in [6.3.3].

(6) For areas in tanks where protective coating and cathodic protection is found to be in good condition, the extent of close-up survey may be specially considered.

(7) Where substantial corrosion, is found, the extent of thickness measurements is to be increased in accordance with the requirements in Tab 7.

(8) Complete ballast tank means double bottom plus double side plus double deck tank, as applicable, even if these tanks are separate.

(9) Web frame means vertical web in side tank, hopper web in hopper tank, floor in double bottom tank and deck transverse in double deck tank (where fitted), including adjacent structural members. In fore and aft peak tank, web frame means a complete transverse web frame ring including adjacent structural members.

(10) Knuckle area is the area of the web frame around the connections of the slope hopper plating to the inner hull bulkhead and the inner bottom plating, up to 2 meters from the corners both on the bulkhead and the double bottom.

(11) Transverse bulkhead complete in ballast tanks, including girder system and adjacent structural members, such as longitudinal bulkheads, girders in double bottom tanks, inner bottom plating, hopper side, inner hull longitudinal bulkhead, connecting brackets.

(12) Where substantial corrosion is found, the extent of thickness measurements is to be increased in accordance with the requirements in Tab 7. These extended thickness measurements are to be carried out before the survey is credited as completed.

5 Intermediate survey - Crude oil storage machinery items

5.1 Storage area and crude oil pump rooms

5.1.1 A general examination of the electrical equipment and cables in dangerous zones such as crude oil pump rooms and areas adjacent to crude oil storage tanks is to be carried out for defective and non-certified safe type electrical equipment and fixtures, non-approved lighting and fixtures, and improperly installed or defective or dead-end wiring.

5.1.2 The electrical insulation resistance of the electrical equipment and circuits terminating in or passing through the dangerous zones is to be tested; however, in cases where a proper record of testing is maintained, consideration may be given to accepting recent test readings effected by the ship's personnel.

5.1.3 The satisfactory condition of the crude oil heating system is to be verified.

6 Class renewal survey - Hull items

6.1 Survey programme and preparation for hull survey

6.1.1 In advance of the class renewal survey, not less than twelve months as far as possible, a specific survey programme is to be worked out by the Owner in cooperation with the Society. The survey programme is to be in a written format.

6.2 Scope of survey

6.2.1 In addition to the requirements of annual surveys, the class renewal survey is to include examination, tests and checks of sufficient extent to ensure that the hull and related piping are in satisfactory condition for the new period of class to be assigned, subject to proper maintenance and operation and to periodical surveys being carried out at the due dates.

6.2.2 All storage tanks, process tanks integral to the hull, slop tanks, salt water ballast tanks, including double bottom tanks, pump rooms, pipe tunnels, cofferdams and void spaces bounding crude oil storage tanks, decks and outer hull are to be examined, and this examination is to be supplemented by thickness measurement and testing as deemed necessary, to ensure that the structural integrity remains effective. The examination is to be directed at discovering substantial corrosion, significant deformation, fractures, damages or other structural deterioration and, if deemed necessary by the Surveyor, may include suitable non-destructive inspection.

6.2.3 The survey extent of combined ballast/crude oil storage tanks is to be evaluated based on the records of ballast history, the extent of the corrosion prevention system provided and the extent of corrosion found.

6.2.4 The survey extent of ballast tanks converted to void spaces will be specially considered by the Society in relation to the requirements for ballast tanks.

6.2.5 Where provided, the condition of the corrosion prevention system of crude oil storage and ballast tanks is to be examined.

For tanks used for salt water ballast, where a protective coating is found to be in poor condition, and is not renewed, where soft coating has been applied, or where a protective coating has never been applied i.e. neither at the time of construction nor thereafter, the tanks in question are to be internally examined at annual surveys. Thickness measurement is to be carried out as considered necessary.

6.3 Overall and close-up surveys

6.3.1 Each class renewal survey is to include an overall survey of all tanks and all spaces. For fuel oil tanks, however, the requirements given in Ch 2, Sec 4, Tab 2 are to be complied with.

6.3.2 Each class renewal survey is to include a close-up examination of sufficient extent to establish the condition of storage tanks and salt water ballast tanks. The minimum requirements for close-up surveys are given in Tab 3 or Tab 4 for double sided units.

6.3.3 The Surveyor may extend the close-up survey as deemed necessary, taking into account the maintenance of the tanks under survey, the condition of the corrosion prevention system and also in the following cases:

- where tanks have structural arrangements or details which have suffered defects in similar spaces or on similar units according to available information
- where tanks have structures approved with reduced scantlings.

6.3.4 For areas in tanks where coatings are found to be in good condition, the extent of close-up surveys required according to Tab 3 or Tab 4 may be specially considered by the Society.

Table 3 : Close-up survey at class renewal survey for single hull

Age of unit (in years at time of class renewal survey)			
age ≤ 5	5 < age ≤ 10	10 < age ≤ 15	age > 15
One web frame ring, in a wing ballast tank, if any, or a wing crude oil storage tank used primarily for water ballast ①	All web frame rings, in a wing ballast tank, if any, or a wing crude oil storage tank used primarily for water ballast ①	All web frame rings in all ballast tanks ① All web frame rings in a crude oil storage wing tank ① A minimum of 30% of all web frame rings in each remaining crude oil storage wing tank ① **(1)**	As class renewal survey for units between 10 and 15 years of age
One deck transverse, in a crude oil storage tank ②	One deck transverse ②: - in each remaining ballast tank - in a crude oil storage wing tank - in two crude oil storage centre tanks		Additional transverse areas as deemed necessary by the Society
	Both transverse bulkheads, in a wing ballast tank, if any, or a crude oil storage wing tank used primarily for water ballast ③	All transverse bulkheads, in all crude oil storage and ballast tanks ③	
One transverse bulkhead in a ballast tank ④ One transverse bulkhead in a crude oil storage wing tank ④ One transverse bulkhead in a crude oil storage centre tank ④	One transverse bulkhead in each remaining ballast tank ④ One transverse bulkhead in a crude oil storage wing tank ④ One transverse bulkhead in two crude oil storage centre tanks ④		
		A minimum of 30% of deck and bottom transverses in each crude oil storage centre tank ⑤ **(1)**	
		Additional web frame ring(s) ①, as considered necessary by the Surveyor	

See Fig 1 or Fig 2 for areas ①, ②, ③, ④ and ⑤.
① Complete transverse web frame ring including adjacent structural member.
② Deck transverse including adjacent deck structural members.
③ Transverse bulkhead complete, including girder system and adjacent structural members.
④ Transverse bulkhead lower part, including girder system and adjacent structural members.
⑤ Deck and bottom transverse, including adjacent structural members.
(1) The 30% is to be rounded up to the next whole integer.
Note 1: Ballast tanks include peak tanks.

Figure 1 : Areas subject to close-up surveys and thickness measurements

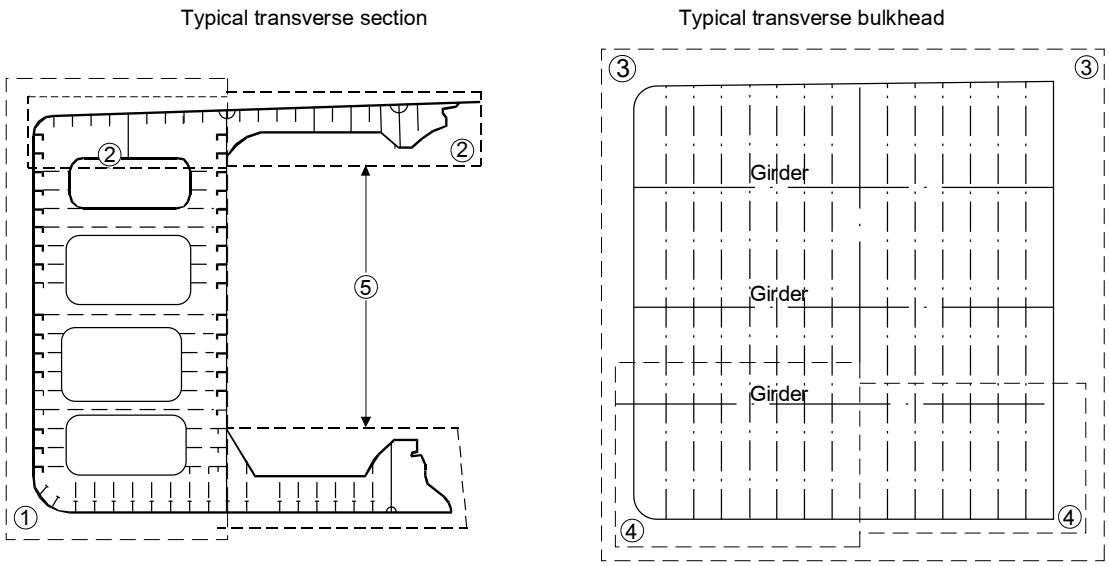

Table 4 : Close-up survey at class renewal survey of double sided units

Age of unit (in years at time of class renewal survey)			
age ≤ 5	5 < age ≤ 10	10 < age ≤ 15	age > 15
One web frame ①, in a complete ballast tank (see Note 1)	All web frames ①, in a complete ballast tank (see Note 1) The knuckle area ⑥ and the upper part (5 meters approximately) of one web frame in each remaining ballast tank	All web frames ① in all ballast tanks	As class renewal survey for units between 10 and 15 years of age
One deck transverse, in a crude oil storage tank②	One deck transverse ② in two crude oil storage tanks	All web frames ⑦ including deck transverse and cross ties, if fitted, in a crude oil storage tank One web frame ⑦ including deck transverse and cross ties, if fitted, in each remaining crude oil storage tank	Additional transverse areas as deemed necessary by the Society
One transverse bulkhead ④ in a complete ballast tank (see Note 1)	One transverse bulkhead ④ in each complete ballast tank (see Note 1)	All transverse bulkheads, in all crude oil storage ③ and ballast tanks ④	
One transverse bulkhead in a crude oil storage wing tank ⑤	One transverse bulkhead in a crude oil storage wing tank ⑤		
One transverse bulkhead in a crude oil storage centre tank ⑤	One transverse bulkhead in two crude oil storage centre tanks ⑤		

See Fig 2 for areas ①, ②, ③, ④, ⑤, ⑥ and ⑦.

① Web frame in a ballast tank means vertical web in side tank, hopper web in hopper tank, floor in double bottom tank and deck transverse in double deck tank (where fitted), including adjacent structural members. In fore and aft peak tank, web frame means a complete transverse web frame ring including adjacent structural members.

② Deck transverse including adjacent deck structural members (or external structure on deck in way of the tank, where applicable).

③ Transverse bulkhead complete in crude oil storage tanks, including girder system adjacent structural members (such as longitudinal bulkheads) and internal structure of lower and upper stools, where fitted.

④ Transverse bulkhead complete in ballast tanks, including girder system and adjacent structural members, such as longitudinal bulkheads, girders in double bottom tanks, inner bottom plating, hopper side, inner hull longitudinal bulkhead, connecting brackets.

⑤ Transverse bulkhead lower part in crude oil storage tank, including girder system, adjacent structural members (such as longitudinal bulkheads) and internal structure of lower stool where fitted.

⑥ Knuckle area is the area of the web frame around the connections of the slope hopper plating to the inner hull bulkhead and the inner bottom plating, up to 2 meters from the corners both on the bulkhead and the double bottom.

⑦ Web frame in a crude oil storage tank means deck transverse, longitudinal bulkhead vertical girder, cross ties where fitted and transverse floors for units without double bottom, including adjacent structural members.

Note 1: Where no centre crude oil storage tank is fitted (as in the case of centre longitudinal bulkhead), transverse bulkheads in wing tanks are to be surveyed.

Note 2: Complete ballast tank means double bottom plus double side plus double deck tank, as applicable, even if these tanks are separate.

Figure 2 : Areas subject to close-up surveys and thickness measurements - double sided units

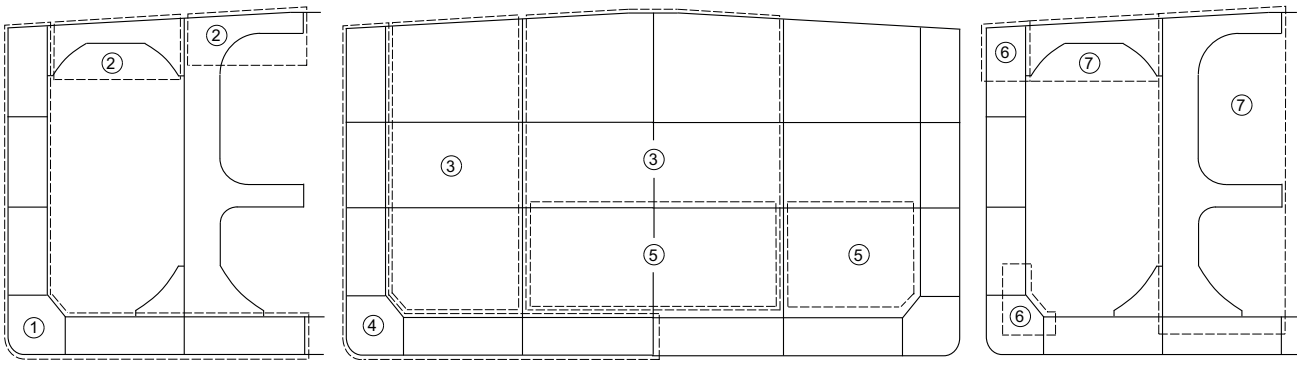

6.4 Thickness measurements

6.4.1 The minimum requirements for thickness measurements at class renewal survey are given in Tab 5.

6.4.2 The Surveyor may extend the thickness measurements as deemed necessary. Provisions for extended measurements for areas with substantial corrosion are given in Tab 6 or Tab 7 for double sided units and as may be additionally specified in the survey programme as required in [6.1] to determine the full extent of the corrosion pattern. These extended thickness measurements are to be carried out before the survey is credited as completed.

Suspect areas identified at previous class renewal surveys are to be examined.

Areas of Substantial Corrosion identified at previous class renewal or intermediate survey are to have thickness measurements taken.

6.4.3 When pitting is found on bottom plating and its intensity is 20% or more, thickness measurements are to be extended in order to determine the actual plate thickness out of the pits and the depth of the pits. Where the wastage is in the substantial corrosion range or the average depth of pitting is 1/3 or more of the actual plate thickness, the pitted plate is to be considered as a substantially corroded area.

6.4.4 For areas in spaces where coatings are found to be in good condition, the extent of thickness measurements according to Tab 5 may be specially considered by the Society.

Table 5 : Thickness measurements at class renewal survey

Age of unit (in years at time of class renewal survey)			
age ≤ 5	5 < age ≤ 10	10 < age ≤ 15	age > 15
Suspect areas	Suspect areas	Suspect areas	Suspect areas
One section of deck plating for the full beam of the unit within the storage area (in way of a ballast tank, if any, or a crude oil storage tank used primarily for water ballast)	Within the storage area: • each deck plate • 1 transverse section **(1)**	Within the storage area: • each deck plate • 2 transverse sections **(1) (2)** • selected bottom plates • all wind and water strakes	Within the storage area: • each deck plate • 3 transverse sections **(1) (2)** • each bottom plate • all wind and water strakes
Measurements, for general assessment and recording of corrosion pattern, of those structural members subject to close-up survey according to Tab 3 and Tab 4	Measurements, for general assessment and recording of corrosion pattern, of those structural members subject to close-up survey according to Tab 3 and Tab 4	Measurements, for general assessment and recording of corrosion pattern, of those structural members subject to close-up survey according to Tab 3 and Tab 4	Measurements, for general assessment and recording of corrosion pattern, of those structural members subject to close-up survey according to Tab 3 and Tab 4
	Selected wind and water strakes outside the storage area	Selected wind and water strakes outside the storage area	All wind and water strakes outside the storage area
(1) Transverse sections are to be chosen where the largest reductions are likely to occur or as revealed by deck plating measurements. **(2)** At least one section is to be within 0,5L amidships and, where applicable, in way of a ballast tank.			

Table 6 : Extended thickness measurements at those areas of substantial corrosion

BOTTOM STRUCTURE		
Structural member	Extent of measurement	Pattern of measurement
Bottom plating	Minimum of 3 bays across tank, including aft bay Measurements around and under all suction bell mouths	5-point pattern for each panel between longitudinals and webs
Bottom longitudinals	Minimum of 3 longitudinals in each bay where bottom plating measured	3 measurements in line across flange and 3 measurements on vertical web
Bottom girders and brackets	At fore and aft transverse bulkhead, bracket toes and in centre of tanks	Vertical line of single measurements on web plating with one measurement between each panel stiffener, or a minimum of three measurements. Two measurements across face flat. 5-point pattern on girder/bulkhead brackets.
Bottom transverse webs	3 webs in bays where bottom plating measured, with measurements at both ends and middle	5-point pattern over 2 square meter area. Single measurements on face flat.
Panel stiffening	Where provided	Single measurements

DECK STRUCTURE		
Structural member	Extent of measurement	Pattern of measurement
Deck plating	Two bands across tank	Minimum of three measurements per plate per band
Deck longitudinals	Minimum of 3 longitudinals in each of two bays	3 measurements in line vertically on webs and 2 measurements on flange (if fitted)
Deck girders and brackets	At fore and aft transverse bulkhead, bracket toes and in centre of tanks	Vertical line of single measurements on web plating with one measurement between each panel stiffener, or a minimum of three measurements. Two measurements across face flat. 5-point pattern on girder/bulkhead brackets.
Deck transverse webs	Minimum of 2 webs, with measurements at both ends and middle of span	5-point pattern over 2 square metre area. Single measurements on face flat.
Panel stiffening	Where provided	Single measurements

SIDE SHELL AND LONGITUDINAL BULKHEADS		
Structural member	Extent of measurement	Pattern of measurement
Deckhead and bottom strakes and strakes in way of stringer platforms	Plating between each pair of longitudinals in a minimum of 3 bays	Single measurement
All other strakes	Plating between every third pair of longitudinals in same 3 bays	Single measurement
Longitudinals on deckhead and bottom strakes	Each longitudinal in same 3 bays	3 measurements across web and 1 measurement on flange
All other longitudinals	Every third longitudinal in same 3 bays	3 measurements across web and 1 measurement on flange
Longitudinal brackets	Minimum of 3 at top, middle and bottom of tank in same 3 bays	5-point pattern over area of bracket
Web frames and cross ties	3 webs with minimum of three locations on each web, including in way of cross tie connections	5-point pattern over approximately 2 square metre area, plus single measurements on web frame and cross tie face flats

TRANSVERSE BULKHEADS AND SWASH BULKHEADS		
Structural member	Extent of measurement	Pattern of measurement
Deckhead and bottom strakes, and strakes in way of stringer platforms	Plating between pair of stiffeners at three locations: approximately 1/4, 1/2 and 3/4 width of tank	5-point pattern between stiffeners over 1 metre length
All other strakes	Plating between pair of stiffeners at middle location	Single measurement
Strakes in corrugated bulkheads	Plating for each change of scantling at centre of panel and at flange of fabricated connection	5-point pattern over about 1 square metre of plating
Stiffeners	Minimum of three typical stiffeners	For web, 5-point pattern over span between bracket connections (2 measurements across web at each bracket connection and one at centre of span). For flange, single measurements at each bracket toe and at centre of span
Brackets	Minimum of three at top, middle and bottom of tank	5-point pattern over area of bracket
Deep webs and girders	Measurements at toe of bracket and at centre of span	For web, 5-point pattern over about 1 square metre. Three measurements across face flat
Stringer platforms	All stringers with measurements at both ends and middle	5-point pattern over 1 square metre of area plus single measurements near bracket toes and on face flats

Table 7 : Extended thickness measurements at those areas of substantial corrosion for double sided units

BOTTOM, INNER BOTTOM (if any) AND HOPPER STRUCTURE		
Structural member	Extent of measurement	Pattern of measurement
Bottom, inner bottom and hopper structure plating	Minimum of 3 bays across double bottom tank, including aft bay Measurements around and under all suction bell mouths	5-point pattern for each panel between longitudinals and floors
Bottom, inner bottom and hopper structure longitudinals	Minimum of 3 longitudinals in each bay where bottom plating measured	3 measurements in line across flange and 3 measurements on vertical web
Bottom girders, including the watertight ones	At fore and aft watertight floors and in centre of tanks	Vertical line of single measurements on girder plating with one measurement between each panel stiffener, or a minimum of three measurements
Bottom floors, including the watertight ones	3 floors in bays where bottom plating measured, with measurements at both ends and middle	5-point pattern over 2 square metre area
Hopper structure web frame ring	3 floors in bays where bottom plating measured	5-point pattern over about 1 square metre of plating. Single measurements on flange.
Hopper structure transverse watertight bulkhead or swash bulkhead	• lower 1/3 of bulkhead	5-point pattern over about 1 square metre of plating
	• upper 2/3 of bulkhead	5-point pattern over 2 square metre of plating
	• stiffeners (minimum of 3)	For web, 5-point pattern over span (2 measurements across web at each end and one at centre of span). For flange, single measurements at each end and centre of span.
Panel stiffening	Where provided	Single measurements

DECK STRUCTURE		
Structural member	Extent of measurement	Pattern of measurement
Deck plating	Two transverse bands across tank	Minimum of three measurements per plate per band
Deck longitudinals	Every third longitudinal in each of two bands with a minimum of one longitudinal	3 measurements in line vertically on webs and 2 measurements on flange (if fitted)
Deck girders and brackets (usually in storage tanks only)	At fore and aft transverse bulkhead, bracket toes and in centre of tanks	Vertical line of single measurements on web plating with one measurement between each panel stiffener, or a minimum of three measurements. Two measurements across flange. 5-point pattern on girder/bulkhead brackets.
Deck transverse webs	Minimum of 2 webs, with measurements at both ends and middle of span	5-point pattern over 1 square metre area. Single measurements on flange.
Vertical web and transverse bulkhead in wing ballast tank (2 metres from deck)	Minimum of 2 webs, and both transverse bulkheads	5-point pattern over 1 square metre area
Panel stiffening	Where provided	Single measurements

STRUCTURE IN WING BALLAST TANKS		
Structural member	Extent of measurement	Pattern of measurement
Side shell and longitudinal bulkhead plating:		
• upper strake and strakes in way of horizontal girders	Plating between each pair of longitudinals in a minimum of 3 bays (along the tank)	Single measurement
• all other strakes	Plating between every third pair of longitudinals in same three bays	Single measurement
Side shell and longitudinal bulkhead longitudinals on:		
• upper strake	Each longitudinal in same 3 bays	3 measurements across web and 1 measurement on flange
• all other strakes	Every third longitudinal in same 3 bays	3 measurements across web and 1 measurement on flange

Longitudinal brackets	Minimum of 3 at top, middle and bottom of tank in same 3 bays	5-point pattern over area of bracket
Vertical web and transverse bulkheads (excluding deckhead area): • strakes in way of horizontal girders	Minimum of 2 webs and both transverse bulkheads	5-point pattern over 2 square metre area
Horizontal girders	Plating on each girder in a minimum of three bays	2 measurements between each pair of longitudinal girder stiffeners
Panel stiffening	Where provided	Single measurements

LONGITUDINAL BULKHEADS IN CRUDE OIL STORAGE TANKS		
Structural member	Extent of measurement	Pattern of measurement
Deckhead and bottom strakes and strakes in way of the horizontal stringers of transverse bulkheads	Plating between each pair of longitudinals in a minimum of 3 bays	Single measurement
All other strakes	Plating between every third pair of longitudinals in same 3 bays	Single measurement
Longitudinals on deckhead and bottom strakes	Each longitudinal in same 3 bays	3 measurements across web and 1 measurement on flange
All other longitudinals	Every third longitudinal in same 3 bays	3 measurements across web and 1 measurement on flange
Longitudinal brackets	Minimum of 3 at top, middle and bottom of tank in same 3 bays	5-point pattern over area of bracket
Web frames and cross ties	3 webs with minimum of three locations on each web, including in way of cross tie connections	5-point pattern over approximately 2 square metre area of webs, plus single measurements on flanges of web frame and cross ties
Lower end brackets (opposite side of web frame)	Minimum of 3 brackets	5-point pattern over approximately 2 square metre area of brackets, plus single measurements on bracket flanges

TRANSVERSE WATERTIGHT AND SWASH BULKHEADS IN CRUDE OIL STORAGE TANKS		
Structural member	Extent of measurement	Pattern of measurement
Upper and lower stool, where fitted	• Transverse band within 25mm of welded connection to inner bottom/ deck plating • Transverse band within 25mm of welded connection to shelf plate	5-point pattern between stiffeners over 1 metre length
Deckhead and bottom strakes, and strakes in way of horizontal stringers	Plating between pair of stiffeners at three locations: approximately 1/4, 1/2 and 3/4 width of tank	5-point pattern between stiffeners over 1 metre length
All other strakes	Plating between pair of stiffeners at middle location	Single measurement
Strakes in corrugated bulkheads	Plating for each change of scantling at centre of panel and at flange of fabricated connection	5-point pattern over about 1 square metre of plating
Stiffeners	Minimum of three typical stiffeners	For web, 5-point pattern over span between bracket connections (2 measurements across web at each bracket connection and one at centre of span). For flange, single measurements at each bracket toe and at centre of span
Brackets	Minimum of three at top, middle and bottom of tank	5-point pattern over area of bracket
Horizontal stringers	All stringers with measurements at both ends and middle	5-point pattern over 1 square metre of area plus single measurements near bracket toes and on flange

6.5 Tank testing

6.5.1 The requirements for tank testing at class renewal survey are given in Tab 8.

6.5.2 The Surveyor may extend the tank testing as deemed necessary.

6.5.3 Tanks are to be tested with a head of liquid to the highest extent possible but not less than the highest point that liquid will rise under service condition for crude oil storage tanks, and for ballast tanks.

Table 8 : Tank testing at class renewal survey

Age of unit (in years at time of class renewal survey)		
age ≤ 5	5 < age ≤ 10	10 < age
All ballast tank boundaries	All ballast tank boundaries	All ballast tank boundaries
Crude oil storage tank boundaries facing ballast tanks, void spaces, pipe tunnels, representative fuel oil tanks, pump rooms or cofferdams	Crude oil storage tank boundaries facing ballast tanks, void spaces, pipe tunnels, representative fuel oil tanks, pump rooms or cofferdams	Crude oil storage tank boundaries facing ballast tanks, void spaces, pipe tunnels, representative fuel oil tanks, pump rooms or cofferdams
	All crude oil storage tank bulkheads which form the boundaries of segregated stored products	All remaining crude oil storage tank bulkheads

6.6 Storage area and crude oil pump rooms

6.6.1 Crude oil storage and crude oil washing piping on deck and crude oil, stripping, venting and ballast piping systems within the storage area are to be examined and operationally tested to working pressure to the attending Surveyor's satisfaction to ensure that their tightness and condition remain satisfactory. Special attention is to be given to any ballast piping in crude oil storage tanks and crude oil storage piping in ballast tanks and void spaces. Surveyors are to be advised on all occasions when this piping, including valves and fittings, is opened during repair periods and can be examined internally.

The surveyor may require dismantling and/or thickness measurements of piping. A hydraulic test is to be carried out in the event of repair or dismantling or crude oil, crude oil washing, or ballast piping, or where doubts arise.

6.6.2 All safety valves on crude oil piping and of crude oil storage tanks are to be dismantled for examination, adjusted and, as applicable, resealed.

6.6.3 All crude oil storage pump room boundaries are to be generally examined. All gas-tight shaft sealing devices are to be examined. The bottom of crude oil storage pump rooms is to be presented clean for the examination of stripping devices and gutters.

7 Class renewal survey - Crude oil storage machinery items

7.1 Storage area and crude oil pump rooms

7.1.1 Crude oil, ballast and stripping pumps are to be internally examined and prime movers checked. A working test is to be carried out, as far as practicable.

Maintenance records of crude oil pumps are to be made available to the Surveyor.

7.1.2 Where a crude oil washing system is fitted, piping, pumps, valves and deck-mounted washing machines are to be examined and tested for signs of leakage, and anchoring devices of deck-mounted washing machines are to be checked to the Surveyor's satisfaction.

7.1.3 The satisfactory condition of the crude oil heating system is to be verified and, if deemed necessary by the Surveyor, the system is to be pressure tested.

7.1.4 An operating test of the remote control of pumps and valves and of automatic closing valves is to be carried out.

7.1.5 A general examination of the electrical equipment and cables in dangerous zones such as crude oil pump rooms and areas adjacent to crude oil storage tanks is to be carried out for defective and non-certified safe type electrical equipment and fixtures, non-approved lighting and fixtures, and improperly installed or defective or dead-end wiring.

The electrical insulation resistance of the electrical equipment and circuits terminating in or passing through the dangerous zones is to be tested; however, in cases where a proper record of testing is maintained, consideration may be given to accepting recent test readings effected by the ship's personnel.

7.2 Fire-fighting systems in crude oil storage area

7.2.1 The survey is to include the examination of fire-fighting systems of any type fitted on board for the protection of the storage area, crude oil pump room and other dangerous spaces, such as deck foam, water-spraying systems, etc., as applicable.

Section 7 Additional Surveys Related to Storage Area of Gas Storage Units

1 General

1.1 Application

1.1.1 The requirements of this Section apply after construction to all gas storage units, which have been assigned one of the following notations:

offshore ship - liquefied gas storage

offshore barge - liquefied gas storage.

1.1.2 The requirements apply to the surveys of the hull structure and piping systems in way of storage tanks, cofferdams, pipe tunnels and void spaces within the storage area and all salt water ballast tanks. They are additional to the requirements applicable to the remainder of the unit, given in Ch 2, Sec 2, Ch 2, Sec 3 and Ch 2, Sec 4 and according to the relevant surveys. For surveys of inert gas installations, reference is made to Ch 2, Sec 9.

1.1.3 The requirements contain the minimum extent of examination, thickness measurements and tank testing. When substantial corrosion, and/or structural defects are found, the survey is to be extended and is to include additional close-up surveys when necessary.

1.1.4 Prior to the commencement of any part of the class renewal survey and intermediate survey, a survey planning meeting is to be held between the attending Surveyor(s), the Owner's representative in attendance and the thickness measurement company representative, where involved.

2 Annual survey - Hull items

2.1 General

2.1.1 The annual survey of storage containment and storage handling systems is preferably carried out during loading or unloading operations. Access to storage tanks and/or inerted hold spaces is normally not required.

2.1.2 Gas plant operational record (log) entries since the last survey are to be examined in order to check the past performance of the system and to establish whether certain parts have shown any irregularities in operation. The evaporation rate and the inert gas consumption are also to be considered.

2.2 Weather decks and storage handling rooms

2.2.1 The survey is to include the:

- examination of all accessible gas-tight bulkhead penetrations including gas-tight shaft sealings
- examination of the sealing arrangements for tanks or tank domes penetrating decks or tank covers
- examination of vapour and gas tightness devices of the wheelhouse windows and doors, side scuttles and windows in way of ends of superstructures and deckhouses facing the storage area or bow or stern loading/unloading arrangements, and closing devices of air intakes and openings into accommodation, service and machinery spaces and control stations
- examination of storage, fuel, ballast, venting and process piping, including the expansion arrangements, insulation from the hull structure, pressure relief and drainage arrangements
- examination of venting systems, including vent masts and protective screens, for storage tanks, interbarrier spaces, hold spaces, fuel tanks and ballast tanks
- examination of storage tank and interbarrier space relief valves and associated safety systems and alarms
- examination of drip trays or insulation for deck protection against storage leakage
- examination of the storage pump room, storage compressor room and storage control room
- confirmation of proper maintenance of arrangements for the airlocks
- confirmation that all accessible storage piping systems are electrically bonded to the hull
- examination of closing and other arrangements of any special enclosed space provided for the crew in case of major storage leakage.

2.3 Other arrangements or devices

2.3.1 The survey is to include the:

- confirmation that the unit's storage hoses are suitable for their intended purpose and in satisfactory condition
- confirmation that any special arrangement made for bow or stern loading/unloading is satisfactory
- confirmation that relevant instruction and information material such as storage handling plans, filling limit information, cooling down procedures, etc., is on board.

2.4 Ballast tanks

2.4.1 Ballast tanks are to be internally examined when required as a consequence of the results of the class renewal survey or the intermediate survey.

2.4.2 When considered necessary by the Surveyor or where extensive corrosion exists, thickness measurements are to be carried out. Where substantial corrosion, is found, the extent of thickness measurements is to be increased to the satisfaction of the Surveyor.

3 Annual survey - Storage machinery items

3.1 Storage area and pump rooms

3.1.1 The survey is to include the:

- examination of mechanical ventilation fans in gas-dangerous spaces and zones
- examination and confirmation of the satisfactory operation of mechanical ventilation of spaces normally entered during operation
- examination, as far as possible during operation, of storage heat exchangers, vaporisers, pumps, compressors and hoses
- confirmation that fixed and/or portable ventilation arrangements provided for spaces not normally entered are satisfactory
- examination of the gas detection safety arrangements for storage control rooms and of the measures taken to exclude ignition sources when such spaces are not gas-safe
- examination of storage (if accessible), bilge, ballast and stripping pumps for excessive gland seal leakage
- confirmation that electrical equipment in gas-dangerous spaces and zones is in satisfactory condition and has been properly maintained
- examination, as far as possible, of arrangements for the use of storage as fuel, and associated instrumentation and safety devices
- confirmation that, if fitted, storage reliquefaction or refrigeration equipment is in satisfactory condition
- confirmation that relevant instruction and information material such as storage handling plans, filling limit information, cooling down procedures, etc., is available on board.

3.2 Instrumentation and safety devices

3.2.1 The survey is to include the:

- confirmation that installed pressure gauges on storage discharge lines are operational
- confirmation that storage tank liquid level gauges are operational and that high level alarms as well as automatic shut-off systems are satisfactory
- confirmation that the temperature indicating equipment of the storage containment system and associated alarms are satisfactory
- confirmation that the manually operated emergency shut-down system as well as automatic shutdown of storage pumps and compressors are satisfactory
- examination of the logbooks for confirmation that the emergency shutdown system has been tested
- confirmation that storage tank, hold and insulation space pressure gauging systems and associated alarms are satisfactory
- examination, and testing as appropriate, of fixed gas detection equipment
- confirmation of the availability and suitability of the portable gas detection equipment and instruments for measuring oxygen levels
- confirmation that storage leakage detection system has been tested and calibrated using gas span and that alarms have been tested.

Note 1: Verification of these devices is to be done by one or more of the following methods:

- visual external examination
- comparing of read outs from different indicators
- consideration of read outs with regard to the actual cargo and/or actual conditions
- examination of maintenance records with reference to cargo plant instrumentation maintenance manual
- verification of calibration status of the measuring instruments.

3.3 Fire-fighting systems in storage area

3.3.1 The survey is to include the examination of fire-fighting systems of any type fitted on board for the protection of the storage area, storage pump room, storage compressor room and other dangerous spaces, such as deck foam, water-spraying and dry powder systems.

4 Intermediate survey - Hull items

4.1 General

4.1.1 The aim of the intermediate survey is to supplement the annual survey by testing storage handling installations with related automatic control, alarm and safety systems for correct functioning.

4.1.2 The intermediate survey is preferably to be carried out with the unit in a gas-free condition. In fact, the extent of the testing required for the intermediate survey will normally be such that the survey cannot be carried out during a loading or discharging operation.

Table 1 : Intermediate survey of storage and salt water ballast tanks

Age of unit (in years at time of intermediate survey)		
5 < age ≤ 10	10 < age ≤ 15	age > 15
Overall survey of one peak tank and at least two representative salt water ballast tanks between the peak bulkheads used primarily for water ballast are to be internally examined and selected by the attending Surveyor. See **(1)**, **(2)**, **(3)** and **(8)**	Overall survey of one peak tank and at least two representative salt water ballast tanks between the peak bulkheads used primarily for water ballast are to be internally examined and selected by the attending Surveyor. See **(2)**, **(3)**, **(7)** and **(8)**	
	Close-up survey in two representative salt water ballast tanks of: - all plating and internal structures in one tank - one deck transverse and one transverse bulkhead (lower part) in the other tank See **(4)** and **(5)**	Close-up survey of all plating and internal structures in two representative salt water ballast tanks See **(4)** and **(5)**
Thickness measurements, if considered necessary by the Surveyor	Thickness measurements, if considered necessary by the Surveyor See **(6)**	Thickness measurements, if considered necessary by the Surveyor See **(6)**

(1) If such survey reveals no visible structural defects, then the examination may be limited to verification that the protective coating remains efficient.

(2) Where poor coating condition, corrosion or other defects are found in salt water ballast tanks or where a protective coating has never been applied, i.e. neither at the time of construction nor thereafter, or where sacrificial anodes where fitted are found to be more than 50% depleted, the examination is to be extended to other ballast tanks of the same type.

(3) For salt water ballast spaces other than double bottom tanks, where a protective coating is found in poor condition, and is not renewed, where soft coating has been applied or where a protective coating has never been applied, i.e. neither at the time of construction nor thereafter, maintenance of class is to be subject to the spaces in question being internally examined and thickness measurement carried out as considered necessary at annual surveys.

For salt water ballast double bottom tanks, where such breakdown of coating is found and is not renewed, where soft coating has been applied or where a protective coating has never been applied, i.e. neither at the time of construction nor thereafter, maintenance of class may be subject to the tanks in question being internally examined and thickness measurement carried out as considered necessary at annual surveys.

(4) The extent of close-up surveys may be increased in accordance with the requirements in [6.3.3].

(5) For areas in tanks where protective coating is found to be in good condition, the extent of close-up survey may be specially considered.

(6) Where substantial corrosion, is found, the extent of thickness measurements is to be increased to the satisfaction of the Surveyor.

(7) If such survey reveals no visible structural defects, then the examination may be limited to verification that the protective coating remains efficient and that the sacrificial anodes, if any, are less than 50% depleted.

(8) The representative spaces are to be based on the record of the previous class intermediate surveys, previous class renewal surveys, the repair history of the tanks and they should not be the same for each intermediate survey.

4.2 Weather decks and storage installation

4.2.1 The survey is to include the:

- examination, as far as applicable, of storage and process, liquid nitrogen (if any), ballast, stripping and vent piping systems as well as vent masts and headers. If upon examination there is any doubt as to the condition of the piping, pressure testing, thickness measurement or both may be required
- examination of vent line drainage arrangements
- confirmation that storage pipes and independent storage tanks, where applicable, are electrically bonded to the hull.

4.3 Storage tanks and salt water ballast tanks

4.3.1 The requirements for survey of storage and salt water ballast tanks given in Tab 1 are to be complied with.

5 Intermediate survey - Storage machinery items

5.1 Storage area and pump rooms

5.1.1 Electrical equipment and cables in dangerous zones such as storage pump rooms, storage compressor rooms and spaces adjacent to and areas above storage tanks are to be examined as far as practicable and tested with particular regard to:

- protective earthing (spot check)
- integrity of flameproof enclosures
- damage of outer sheath of cables
- function test of pressurised equipment and associated alarms
- test of systems for de-energising non-certified safe electrical equipment located in spaces protected by air-locks, such as electric motor rooms, storage control rooms, etc...

5.1.2 The electrical insulation resistance of the electrical equipment and circuits in dangerous zones is to be measured. These measurements are only to be effected when the unit is in a gas-free or inerted condition and are to be carried out within an acceptable time period. Where a proper record of testing is maintained, consideration may be given to accepting recent readings by the unit's personnel.

5.1.3 In addition to the requirements of [5.1.1] and [5.1.2], the survey also consists of the:

- confirmation that the storage heating/cooling system is in satisfactory condition
- confirmation that spares are provided for storage area mechanical ventilation fans
- confirmation that the heating system of the hull structure is in satisfactory working condition
- general examination and test of leakage detection systems in interbarrier and hold spaces.

5.2 Instrumentation and safety devices

5.2.1 The survey is to include the:

- examination of the installed pressure gauging systems on storage discharge lines, storage tanks, holds and insulation spaces and associated alarms
- examination of the storage tank liquid level gauges and high level alarms as well as automatic shut-off systems
- examination of the temperature indicating equipment of the storage containment system and associated alarms
- test of the above-mentioned instrumentation by changing pressure, level and temperature as applicable and comparing with test instruments. Simulated tests may be accepted for sensors which are not accessible or located within storage tanks or inerted hold spaces. The test is to include alarm and safety functions
- examination, as far as practicable, of the piping of the gas detection system for corrosion and damage. The integrity of the suction lines between suction points and analysing units is to be verified as far as possible
- calibration of gas detectors or verification thereof with sample gases
- confirmation of the availability and suitability of the portable gas detection equipment and instruments for measuring oxygen levels
- test of the manually operated emergency shutdown system (without flow in the pipelines) to verify that the system will cause the storage pumps and compressors to stop.

5.2.2 The instrumentation and safety systems for burning storage as fuel are to be examined in accordance with the requirements indicated in [5.2.1].

6 Class renewal survey - Hull items

6.1 Survey programme

6.1.1 A specific survey programme should be worked out in advance of the class renewal survey by the Owner in cooperation with the Society.

6.1.2 The survey programme is to include conditions for survey, access to structures and equipment for surveys, taking into account the minimum requirements of Tab 2 and Tab 3 for close-up survey and thickness measurements, and [6.4] for tank testing.

6.2 Scope of survey

6.2.1 In addition to the requirements of annual surveys, the class renewal survey is to include examination, tests and checks of sufficient extent to ensure that the hull and related piping are in satisfactory condition for the new period of class to be assigned, subject to proper maintenance and operation and to periodical surveys being carried out at the due dates.

6.2.2 All storage tanks, salt water ballast tanks, including double bottom tanks, pump rooms, pipe tunnels, cofferdams and void spaces bounding storage tanks, decks and outer hull are to be examined, and this examination is to be supplemented by thickness measurement and testing as deemed necessary, to ensure that the structural integrity remains effective. The examination is to be directed at discovering substantial corrosion, significant deformation, fractures, damages or other structural deterioration and, if deemed necessary by the Surveyor, may include suitable non-destructive inspection.

6.2.3 The condition of the coating or corrosion prevention system of ballast tanks is to be examined.

For salt water ballast double bottom tanks, where such breakdown of coating is found and is not renewed, where soft coating has been applied or where a protective coating has never been applied, i.e. neither at the time of construction nor thereafter, maintenance of class may be subject to the tanks in question being internally examined and thickness measurement carried out as considered necessary at annual intervals.

For salt water ballast spaces other than double bottom tanks, where a protective coating is found in poor condition and is not renewed, where soft coating has been applied, or where a protective coating has never been applied, i.e. neither at the time of construction nor thereafter, maintenance of class is to be subject to the spaces in question being internally examined and thickness measurement carried out as considered necessary at annual intervals.

6.3 Overall and close-up surveys

6.3.1 Each class renewal survey is to include an overall survey of all tanks and spaces. For fuel oil tanks, however, the requirements given in Ch 2, Sec 4, Tab 2 are to be complied with.

6.3.2 Each class renewal survey is to include a close-up examination of sufficient extent to establish the condition of storage tanks and salt water ballast tanks. The minimum requirements for close-up surveys are given in Tab 2 for salt water ballast tanks and in [6.6.3] for storage tanks.

6.3.3 The Surveyor may extend the close-up survey as deemed necessary, taking into account the maintenance of the tanks under survey, the condition of the corrosion prevention system and also in the following cases:

- in particular, in tanks having structural arrangements or details which have suffered defects in similar tanks, or on similar units according to available information
- in tanks having structures approved with reduced scantlings.

6.3.4 For areas in tanks where coatings are found to be in good condition, the extent of close-up surveys required according to Tab 2 may be specially considered by the Society.

For units having independent tanks of type C, with a midship section similar to that of a general cargo ship, the extent of close-up surveys of salt water ballast tanks may be specially considered by the Society.

6.4 Thickness measurements

6.4.1 The minimum requirements for thickness measurements at class renewal survey are given in Tab 3.

6.4.2 The Surveyor may extend the thickness measurements as deemed necessary. Where substantial corrosion is found, the extent of thickness measurements is to be increased to the satisfaction of the Surveyor. Where substantial corrosion is identified and is not rectified, this will be subject to re-examination at intermediate surveys.

6.4.3 For areas in spaces where coatings are found to be in good condition the extent of thickness measurements according to Tab 3 may be specially considered by the Society.

6.4.4 For units having independent tanks of type C, with a midship section similar to that of a general cargo ship, the extent of thickness measurements may be increased to the tank top plating to the satisfaction of the Surveyor.

Table 2 : Requirements for close-up survey at class renewal survey

Age of unit (in years at time of class renewal survey)			
age ≤ 5	5 < age ≤ 10	10 < age ≤ 15	age > 15
One transverse section **(1)**, in a ballast wing tank or ballast double hull tank	All plating and internal structures **(4)**, in a ballast wing tank or ballast double hull tank	All plating and internal structures **(4)**, in all ballast tanks	As class renewal survey for units between 10 and 15 years of age
	One deck transverse **(2)**, in each remaining ballast tank or on deck		
One transverse bulkhead **(3)**, in a ballast tank	One transverse bulkhead **(3)**, in each remaining ballast tank		

(1) Complete transverse web frame ring including adjacent structural members.
(2) Deck transverse including adjacent deck structural members.
(3) Transverse bulkhead lower part, including girder system and adjacent structural members.
(4) Complete tank, including all tank boundaries and internal structure, and external structure on deck in way of the tank where applicable.
Note 1: Salt water ballast tanks include peak tanks.
Note 2: Double hull tank includes double bottom and side tank even if these tanks are separate.

Table 3 : Requirements for thickness measurements at class renewal survey

Age of unit (in years at time of class renewal survey)			
age ≤ 5	5 < age ≤ 10	10 < age ≤ 15	age > 15
Suspect areas	Suspect areas	Suspect areas	Suspect areas
One section of deck plating for the full beam of the unit within the storage area	Within the storage area: • each deck plate • one transverse section **(1)** • selected bottom plates • selected strakes in splash zone	Within the storage area: • each deck plate • two transverse sections **(1)** **(2)** • selected bottom plates • all strakes in splash zone	Within the storage area: • each deck plate • three transverse sections **(1)** **(2)** • each bottom plate • all strakes in splash zone
Measurements, for general assessment and recording of corrosion pattern, of those structural members subject to close-up survey according to Tab 2	Measurements, for general assessment and recording of corrosion pattern, of those structural members subject to close-up survey according to Tab 2	Measurements, for general assessment and recording of corrosion pattern, of those structural members subject to close-up survey according to Tab 2	Measurements, for general assessment and recording of corrosion pattern, of those structural members subject to close-up survey according to Tab 2
	Selected strakes in the splash zone outside the storage area	Selected strakes in the splash zone outside the storage area	Selected strakes in the splash zone outside the storage area

(1) Transverse sections are to be chosen where the largest reductions are likely to occur or as revealed by deck plating measurements.
(2) At least one section is to be within 0,5 L amidships and, where applicable, in way of a ballast tank.

6.5 Tank testing

6.5.1 All boundaries of salt water ballast tanks are to pressure tested. For fuel oil tanks, only representative tanks are to be pressure tested. For storage tanks, refer to [6.6].

6.5.2 The Surveyor may extend the tank testing as deemed necessary.

6.5.3 Salt water ballast tanks and fuel oil tanks are to be tested with a head of liquid to the top of air pipes.

6.6 Storage tank structure

6.6.1 All storage tanks are to be cleaned and examined internally.

6.6.2 When accessible, the outer surface of uninsulated storage tanks or the outer surface of storage tank insulation together with any vapour or protective barrier is to be examined. Special attention is to be given to the tank and insulation in way of chocks, supports and keys. Removal of insulation, in part or entirely, may be required in order to verify the condition of the tank or the insulation itself if deemed necessary by the Surveyor.

Where the arrangement is such that the insulation cannot be examined entirely, the surrounding structures of wing tanks, double bottom tanks and cofferdams are to be examined for cold spots when the storage tanks are in the cold condition, unless voyage records together with the instrumentation give sufficient evidence of the integrity of the insulation system.

6.6.3 Thickness measurements may be required if deemed necessary by the Surveyor.

Close-up surveys are to be carried out in independent cargo tanks of type B and C at those areas where corrosion may develop.

6.6.4 Non-destructive testing is to supplement storage tank inspection with special attention to be given to the integrity of the main structural members, tank shell and highly stressed parts, including welded connections as deemed necessary by the Surveyor.

The following items are, inter alia, considered highly stressed areas:

- storage tank supports and anti-rolling or anti-pitching devices
- web frames or stiffening rings
- Y-connection of shell plates and longitudinal bulkhead of bilobe tanks
- swash bulkhead boundaries
- dome and sump connections to the shell plating
- foundations for pumps, towers, ladders, etc
- pipe connections.

6.6.5 For independent tanks of type B, the extent of non-destructive testing is to be as given in a programme specially prepared for the storage tank design.

6.6.6 The tightness of all storage tanks is to be verified by an appropriate procedure. Provided that the effectiveness of the unit's gas detection equipment has been confirmed, it will be acceptable to utilise this equipment for the tightness test of independent tanks below deck.

6.6.7 Where the results of the examinations dealt with in [6.6.1] to [6.6.6] or the examination of the voyage records raise doubts as to the structural integrity of a storage tank, a hydraulic or hydropneumatic test is to be carried out.

For integral tanks and for independent tanks of type A and B, the test pressure is not to be less than the MARVS.

For independent tanks of type C, the test pressure is not to be less than 1,25 times the MARVS.

6.6.8 When the unit is 10 years old, at every alternate class renewal survey, independent storage tanks of type C are to be either:

- hydraulically tested to 1,25 times the MARVS, and thereafter non-destructively tested in accordance with [6.6.4], or
- subjected to thorough non-destructive testing in accordance with a programme specially prepared for the tank design.

If a special programme of non-destructive testing does not exist, special attention is to be given to the detection of surface cracks in welded connections in highly stressed areas as listed in [6.6.4].

At least 10% of the length of the welded connections in each of the above-mentioned areas is to be tested. This testing is to be carried out internally and externally, as applicable. Insulation is to be removed as necessary for the required non-destructive testing.

Where hold space atmosphere control is permanently maintained, the scope of external examination of the tanks and their supports may be reduced at the Surveyor's discretion.

6.6.9 As far as accessible, hold spaces and hull insulation (if provided), secondary barriers and tank supporting structures are to be visually examined. The secondary barrier of tanks is to be checked for its effectiveness by means of a pressure/vacuum test, a visual examination or any other acceptable method.

6.6.10 For membrane, semi-membrane and internal insulation tank systems, inspection or testing is to be carried out in accordance with a programme specially prepared for the tank system concerned.

6.6.11 All gas-tight bulkheads are to be examined and the effectiveness of gas-tight shaft sealing is to be verified.

6.6.12 It is to be verified that independent storage tanks are electrically bonded to the hull.

6.6.13 The pressure relief valves for the storage tanks are to be opened for examination, adjusted, function tested and sealed. If the storage tanks are equipped with relief valves with non-metallic membranes in the main or pilot valves, these non-metallic membranes are to be replaced. Where a proper record of continuous overhaul and re-testing of individually identifiable relief valves is maintained, consideration may be given to acceptance on the basis of opening, internal examination and testing of a representative sample of valves, including each size and type of liquefied gas or vapour relief valves in use, provided there is evidence in the log-book that the remaining valves have been overhauled and tested since crediting of the previous class renewal survey.

6.7 Weather decks and storage handling rooms

6.7.1 Piping for storage and process, liquid nitrogen (if any), ballast, stripping and venting systems is to be examined to the Surveyor's satisfaction. Insulation is to be removed as deemed necessary to ascertain the condition of the pipes. If the visual examination raises doubts as to the integrity of the pipelines, a pressure test at 1,25 times the MARVS for the pipeline is to be carried out. After reassembly the complete piping systems are to be tested for leaks.

It is to be verified that storage piping systems are electrically bonded to the hull.

6.7.2 The pressure relief valves on storage piping are to be function tested. A random selection of valves is to be opened for examination and adjusted.

6.7.3 All storage pump room, compressor room and control room boundaries are to be generally examined. Gas-tight shaft sealing devices are to be examined. The bottom of storage pump rooms and storage compressor rooms is to be presented clean for the examination of stripping devices and gutters.

6.7.4 Pressure/vacuum relief valves, rupture discs and other pressure relief devices for interbarrier spaces and/or hold spaces are to be examined and, if necessary, opened and tested in accordance with their design.

Vent line drainage arrangements are to be examined.

7 Class renewal survey - Storage machinery items

7.1 Storage area, storage pump rooms, storage compressor rooms

7.1.1 Storage, ballast and stripping pumps are to be internally examined and prime movers checked. A working test is to be carried out.

Maintenance records of storage pumps are to be made available to the Surveyor.

7.1.2 Electrical equipment and cables in dangerous zones such as storage pump rooms, storage compressor rooms and spaces adjacent to and areas above storage tanks are to be examined as far as practicable and tested with particular regard to:

- protecting earthing (spot check)
- integrity of flameproof enclosures
- damage of outer sheath of cables
- function testing of pressurised equipment and associated alarms
- testing of systems for de-energising non-certified safe electrical equipment located in spaces protected by air-locks, such as electric motor rooms, cargo control rooms, etc.

7.1.3 The electrical insulation resistance of the electrical equipment and circuits in dangerous zones is to be measured. These measurements are only to be effected when the unit is in a gas-free or inerted condition and are to be carried out within an acceptable time period. Where a proper record of testing is maintained, consideration may be given to accepting recent readings by the unit's personnel.

7.1.4 When there is a reliquefaction or refrigeration plant, and/or arrangements for the use of storage as fuel, the corresponding machinery and equipment, such as storage pumps, compressors, heat exchangers, condensers and process pressure vessels, are to be surveyed to the same extent as required for similar equipment on board oil storage at the class renewal survey.

7.1.5 In addition to the requirements of [7.1.1] to [7.1.4], the survey also consists of:

- confirmation that spares are provided for storage area mechanical ventilation fans
- confirmation that the installation for heating the hull structure is in satisfactory working condition
- general examination and testing of leakage detection systems in interbarrier spaces and hold spaces
- examination of gas detection piping system for corrosion or damage; checking, as far as possible, of the integrity of suction lines between suction points and analysing units
- examination and tests of systems for the removal of water from interbarrier spaces and hold spaces
- examination of portable equipment, such as hoses and spool pieces used for segregation of piping systems for storage, inert gas and bilge pumping.

7.2 Fire-fighting systems in storage area

7.2.1 The survey is to include the examination of fire-fighting systems of any type fitted on board for the protection of the storage area, storage pump room, storage compressor room and other dangerous spaces, such as deck foam, water-spraying, dry powder systems etc., as applicable in accordance with the relevant requirements.

Section 8 Survey of Underwater Parts and Temporary Mooring Equipment

1 Scope of survey

1.1 Structure and appurtenances

1.1.1 The underwater parts of the structure are to be examined for corrosion, or deterioration due to chaffing from anchoring equipment or supply craft or contact with the ground and for any undue unfairness or buckling. Special attention is paid to bilge keels if applicable. Plate unfairness or other deterioration which do not necessitate immediate repairs, is to be recorded.

1.1.2 Sea chests and their gratings, sea connections and overboard discharge valves and cocks and their fastenings to the hull or sea chests are to be examined. Valves and cocks need not be opened up more than once in a class term unless considered necessary by the Surveyor.

1.1.3 Particular attention is to be paid to the following areas:

- for surface units:
  - moon pool and other openings
  - turrets
  - spread moored area
- for column stabilized units:
  - connections of columns to the lower hulls
  - intersections between bracings and diagonals
  - covers to any outside access openings
- for TLP units:
  - connections of columns to the lower hulls
  - intersections between bracings and diagonals
  - covers to any outside access openings
  - tension leg
  - foundations of lower connectors, as far as practicable
- for self-elevating units:
  - spud cans
  - bracing members
  - trusses of legs
  - leg foundation.

1.1.4 The condition of anodes and of their attachments to the structure are ascertained at random.

1.1.5 Anodes more than 75% depleted are to be replaced.

1.1.6 When a unit is in dry-dock or on a slipway, it is to be placed on blocks of sufficient height and with the necessary staging to permit the examination of underwater parts of the structure, including, if fitted, rudder, propeller, sea chests and valves.

1.2 Temporary Mooring equipment

1.2.1 Temporary mooring equipment shall be considered as mooring equipment not covered by **POSA** or **TLS** notation.

1.2.2 For units fitted with temporary mooring equipment, the corresponding anchors, chain cables and/or wire ropes, windlasses and winches are to be examined and checked. This operation does not need to be carried out more than once in a five year period, unless considered necessary by the Surveyor. Worn out or damaged chain lengths and wire ropes are to be renewed.

1.2.3 Housing and supporting equipment (rack, fairleads, tendon porch, etc.), are to be examined together with their outside and inside connection to the unit's structure.

1.3 Propulsion and manoeuvring

1.3.1 Visible parts of rudder, rudder pintles, rudder stock and couplings as well as stern frames, if any, are to be examined. If considered necessary by the Surveyor, the rudder is to be lifted or the inspection plates removed for the examination of pintles. The clearance in the rudder bearings and the rudder lowering are to be checked and recorded.

Where applicable, pressure test of the rudder may be required as deemed necessary by the Surveyor.

1.3.2 Visible parts of propeller, stern bush, propeller shaft boss, brackets and tightness systems are to be examined. The clearances of the propeller shaft (or wear down gauge) are to be checked and recorded. For controllable pitch propellers, the Surveyor is to be satisfied with the fastenings and tightness of hub and blade sealing.

Visible parts of other propulsion systems and propellers for steering purposes are also to be examined.

Dismantling is to be carried out, if considered necessary, notably where leakages are detected.

1.3.3 Visible parts of thrusters are to be examined.

2 In-water surveys

2.1 General

2.1.1 The in-water survey is to provide the information normally obtained from a bottom survey in dry condition. Special consideration shall be given to ascertaining rudder bearing clearances and stern bush clearances of oil stern bearings based on a review of the operating history, on board testing and stern oil sample reports. These considerations are to be included in the proposal for in-water surveys.

During in-water survey, cathodic protection potential readings are to be taken. The amount of readings is to be representative of the whole immersed part of the structure of the unit.

2.1.2 Proposals for in-water surveys are to be submitted in advance of the survey so that satisfactory arrangements can be agreed with the Society.

2.1.3 In principle, no outstanding conditions of class are to exist requiring repair work to be carried out to the underwater part of the shell plating, the rudder, the propeller or the propeller shaft, unless the Society is satisfied that such repairs may be carried out while the unit is afloat.

2.1.4 The in-water survey is to be carried out with the unit at a suitable draught; the in-water visibility is to be good and the structure below waterline is to be sufficiently clean to permit meaningful examination.

The equipment, procedure for observing and reporting the survey are to be discussed with the parties involved prior to the in-water survey, and suitable time is to be allowed to permit the diving company to test all equipment beforehand.

2.1.5 The in-water survey is to be carried out, under surveillance of a Surveyor, by divers or by suitably equipped remotely operated vehicles (ROV's). The divers are to be employed by a firm approved as service supplier by the Society. Upon completion of the survey, the approved diving firm is to submit to the attending Society Surveyor a detailed report including video tapes, as well as photographic documentation of the main parts inspected.

2.1.6 The in-water survey scope of work maybe mergeable over a three months period (weather condition, in-water visibility, diver's safety...). The overlap and the sequence of inspection shall be provided at satisfaction of the surveyor.

2.1.7 The Surveyor is to be satisfied with the methods of localisation of the diver(s) on the plating which should make use where necessary of permanent markings on the plating at selected points and with the method of pictorial representation. An efficient two-way communication between the Surveyor and diver(s) is to be provided.

2.1.8 If the in-water survey reveals damage or deterioration that requires immediate attention, the Surveyor may require that the unit be drydocked in order that a detailed survey can be undertaken and the necessary repairs carried out.

2.1.9 The under water marking plan shall be approved by the Society.

2.1.10 An in-water survey may normally be carried out if the unit has been granted the additional class notation **INWATERSURVEY** as defined in Ch 1, Sec 2, [8.4.9]. Upon application by the Owner, the Society may also authorise, on a case-by-case basis, such bottom in-water survey for units not assigned with the additional class notation **INWATERSURVEY**.

2.2 Arrangements for in-water surveys

2.2.1 It is advisable that both the Surveyor and the divers are provided with detail drawings of the structure and hull attachments below the water line, including:

- all shell openings
- stem
- rudder and fittings
- sternpost
- propeller, including the means used for identifying each blade
- anodes, including securing arrangements
- bilge keels
- welded seams and butts.

The plans are to include all the necessary instructions to facilitate the divers' work, specially for taking clearance measurement when applicable.

2.2.2 The unit is to be provided with special constructional features so as to make the underwater survey easy and efficient, that is:

a) markings of a water-resistant nature are to be fitted on the underwater parts of the structure to facilitate the localisation of inspected parts, showing in particular, the location of main bulkheads

b) sea valves, if needed to be opened up as per [1.1.2], including valve chests, are to be provided with suitable blanking arrangements so that cocks, valves and strainers can be examined

c) rudder arrangements are to be such that rudder pintle clearances and fastenings arrangements can be easily checked

d) propeller shaft arrangements are to be such that clearances can be easily checked.

2.2.3 The Society is to take into consideration the units which, for specific reasons, depart from the requirements of [2.2.1] or [2.2.2].

Section 9 Other Surveys

1 Survey of inert gas and hydrocarbon blanketing installations

1.1 General

1.1.1 The requirements of the present Article are applicable to all inert gas installations fitted on board floating storage units, covered or not by additional service feature **INERTGAS**, and to hydrocarbon blanketing installations.

1.2 Annual survey

1.2.1 All units

The survey of inert gas installation, as far as applicable, consists of the:

- general examination of the installation in operation condition
- external examination of the condition of piping and components for signs of corrosion or gas leakage / effluent leakage
- confirmation of the proper operation of inert gas blowers
- observation of the operation of the scrubber room ventilation system
- checking of deck water seal for automatic filling and draining; checking for presence of water carry-over and checking the condition of the non-return valve
- examination of the operation of remotely operated or automatically controlled valves and, in particular, the flue gas isolating valve(s)
- observation of a test of the interlocking feature of soot blowers
- observation that the gas pressure regulating valve automatically closes when the inert gas blowers are secured
- checking, as far as practicable, the following alarms and safety devices of the inert gas system using simulated conditions when necessary:
  - high oxygen content of gas in the inert gas main
  - low gas pressure in the inert gas main
  - low pressure in the supply to the deck water seal
  - high temperature of gas in the inert gas main
  - low water pressure to the scrubber
  - accuracy of portable and fixed oxygen measuring equipment by means of calibration gas
  - high water level in the scrubber
  - failure of inert gas blowers
  - failure of the power supply to the automatic control system for the gas regulating valve and to the instrumentation for continuous indication and permanent recording of pressure and oxygen content in the inert gas main
  - high pressure of gas in the inert gas main.

1.2.2 Additional requirements for gas storage units

Inert/drying gas systems, including the means for prevention of backflow of storage vapour to gas-safe spaces, are to be verified as being in good condition.

1.3 Intermediate survey

1.3.1 Inert gas installations of all storage units

Requirements of the present article are additional to those of [1.2] for annual survey, which remain applicable.

For installations covered by additional service feature **INERTGAS**, the following applies:

- main parts such as scrubbers, washing machines, blowers and deck water seals are to be overhauled for examination
- valves are to be dismantled for examination
- pipe sections are to be dismantled for examination except where representative UTM of the piping has been carried out to the surveyor's satisfaction
- all alarms will be examined and tested.

For installations other than those covered by additional service feature **INERTGAS**, main parts such as scrubbers, washing machines, blowers and deck water seals are to be overhauled for examination.

1.3.2 Inert gas installations of gas storage units

In addition to requirements of [1.2] for annual survey, the following applies:

- the main equipment, such as inert gas producers, isolating valves, when fitted, are to be examined
- special attention is to be paid to low temperature nitrogen storage plant and to the associated arrangement for protection of hull structure against nitrogen leakage.

1.3.3 Hydrocarbon blanketing installations

Requirements of the present article are additional to those of [1.2] for annual survey, which remain applicable.

The following applies:

- main parts such as blower, compressor, filter, gas regulating valve, pressure released valve, vacuum protection system and deck water seals are to be overhauled for examination
- valves are to be dismantled for examination
- pipe sections are to be dismantled for examination except where representative UTM of the piping has been carried out to the surveyor's satisfaction
- all alarms and sensors will be examined and tested.

1.4 Class renewal survey

1.4.1 The scope of class renewal survey of all inert gas installations is equivalent to the one laid down in [1.3] for the intermediate survey.

2 Survey of additional class notation AUTO

2.1 Annual survey

2.1.1 The annual survey of classed automated installations consists of the:

- examination of the machinery and automated plant operational record (log book) entries - when such a log book exists - since the last survey in order to check the past performance of the system, and to establish if certain parts have shown any irregularities in operation and which corrective measures have been taken
- general examination of the control systems covered by the notation and random check, as far as possible taking into account operating conditions, of the proper operation of main measuring, monitoring, alarm and automatic shut-down system, in particular for essential auxiliaries
- checking the fire detectors, in particular in machinery spaces, and bilge flooding alarms
- checking a number of other alarms selected at random.

2.2 Class renewal survey

2.2.1 The class renewal survey of classed automated installations consists of:

- the examinations, tests and checks listed in [2.1] for the annual survey, and
- an additional programme of examinations, tests and checks prepared in agreement with the Owner and based on operating data and on the experience of previous surveys.

All points which cannot be checked when the unit is in operation will be given particular consideration by this programme. All alarm and safety devices will be tested and settings adjusted if necessary, except if evidence exists of the proper operation of these installations, or if they have been subject of a systematic maintenance.

Fire smoke detectors fitted in the machinery spaces are to be tested in similar conditions as for the first certificate delivery; alternatively, written evidence of reconditioning and recalibrating by the Manufacturer or by his representative may be accepted.

3 Survey of additional service feature POSA, POSA-HR, POSA JETTY and POSA MU

3.1 Periodical surveys

3.1.1 Requirements regarding periodical surveys are given in NR493 Classification of Mooring Systems for Permanent and Mobile Offshore Units.

4 Survey of production units

4.1 Application

4.1.1 Requirements given in the present Article for production units are additional to those given in the relevant Sections of this Chapter.

4.2 Survey requirements for units assigned with service notation oil production unit

4.2.1 Annual survey and class renewal survey

The survey will consist of the:

- confirmation to be obtained that no new production equipment has been installed without previous notification to the Society
- examination of the support structure of production plant and its connection to the unit's structure
- verification of the risers foundations securing the riser to the unit
- confirmation that production pipes, pumps, accessories and other production equipment are permanently fixed
- confirmation that piping systems for the process are separated from other piping systems of the unit
- confirmation that process piping are not passing through any space other than those devoted to production purposes
- verification of the arrangements made in order to ensure that substances which are flammable, toxic or are likely to present a hazard due to reaction when mixed are kept separated
- verification of the means provided to collect and safely dispose liquid leaks from process equipment
- confirmation that drainage systems for safe areas are entirely separated and distinct from drainage systems from hazardous areas
- checking, as far as practicable, of the alarm activation in manned control rooms due to loss of pressurisation of high pressure equipment
- general visual examination of the condition of high pressure equipment and piping. Checking for absence of damages or excessive corrosion
- review of the records of inspection and tests of safety valves
- examination of the conditions of insulation of hot surfaces.

4.3 Survey requirements for additional class notation PROC, PROC-GL and PROC-GP

4.3.1 Annual survey

The survey will consist of the:

- external inspection of pressure vessels, heat exchangers, attached instrumentation and safety devices
- visual inspection of piping systems including drainage shut down and blowdown valves
- examination of pumps for excessive gland seal leakage
- external inspection of compressors and tests of protective devices
- examination of flare and flare pilot system or cold venting system
- examination of well control equipment
- inspection of support structure
- examination of fire and gas detection system
- examination of fire water system.

4.3.2 Class renewal survey

In addition to the survey performed as per [4.3.1], class renewal survey will mainly consist in internal examination of main process equipment (pressure vessels, exchangers, pumps, compressors, boilers,...) and pipings.

Safety valves setting will be checked. Safety systems will be tested for proper operation (i.e. ESD, process shutdown, fire and gas detection, fire water).

Configuration of the process system (equipment in parallel) and planned shutdowns will be taken into account to minimise production break.

In case of doubt, pressure test may be requested at the satisfaction of the Surveyor.

5 Survey of swivels and production riser systems

5.1 Application

5.1.1 The requirements given in the present Article for swivels and production riser systems are additional to those given in the relevant Sections of the present Chapter.

The survey requirements for swivel systems, as described in [5.2], are applicable to units assigned with the structural type notation **offshore buoy** and to surface units assigned with service notation **oil production unit** and/or **oil storage** and/or **liquefied gas storage**, whenever the unit is fitted with such equipment.

The survey requirements for production riser systems, as described in [5.3], are applicable to units assigned the additional class notation **RIPRO**.

5.2 Swivel systems

5.2.1 Annual survey

The survey will consist of the:

- external inspection of pressure swivels, attached instrumentation and safety devices
- external inspection of electrical swivels, attached instrumentation and safety devices
- visual inspection of piping systems including leak drainage system
- examination of sealing systems for leakage
- tests of protective devices
- examination of electrical cables and connectors and performance of insulation resistance test of circuits
- inspection of support structure
- examination of fire and gas detection systems
- examination of fire water system.

5.2.2 Class renewal survey

In addition to the survey performed as per [5.2.1], class renewal survey will mainly consist in internal examination of swivels and pipings, where accessible and if considered necessary by the Surveyor.

Rotation tests are to be performed, as far as practicable, with measurement of starting and running moments.

Safety systems will be tested for proper operation.

Planned shutdowns will be taken into account to minimise production break.

In case of doubt, pressure test may be requested at the satisfaction of the Surveyor.

5.3 Production riser systems

5.3.1 Annual survey

The survey will consist of the:

- external examination of readily accessible parts
- external examination of riser handling system and other mechanical systems (where applicable)
- external examination of riser valve system.

5.3.2 Class renewal survey

A specific programme of underwater survey is to be submitted to the Society, taking into account arrangement and configuration of risers.

This programme is to include, as a minimum, general visual inspection, by divers or ROV's, of selected lines, and close visual inspection of all critical areas.

If the risers are unclosed by a tube, boroscope examination shall be done.

Upon owner’s request, the specific inspection programme may be worked out by the owner in cooperation with the Society

Configuration of the process system (equipment in parallel) and planned shutdowns will be taken into account to minimise production break.

In case of doubt, pressure or resistance tests may be requested at the satisfaction of the Surveyor.

In addition to the survey performed as per [5.3.1], the operation of systems and the safety devices will be tested.

6 Survey of additional class notations COMF HEALTH-NOISE-g-SIS and COMF HEALTH-VIB-g-SIS

6.1 General

6.1.1 When modifications, alterations or repairs have occurred and which may affect the noise and vibration environment, the Owner is to inform the Society in order to submit the unit to a survey so as to maintain the additional class notations.

6.2 Annual survey

6.2.1 The Owner or his representative is to declare to the attending Surveyor that no significant modifications have been made without the prior approval of the Society, in particular with respect to:

- modifications/repairs carried out in accommodation, service, navigation and control spaces
- HVAC/duct routing modifications
- machinery modifications, main repairs
- list of any alterations, repairs or damages.

6.3 Class renewal survey

6.3.1 The usual life-cycle of the offshore units may induce vibration and noise increase.

- Class Renewal Survey No. 1:
  The scope is the same as for Annual survey
- Class Renewal Survey No. 2 and subsequent:
  - noise and vibration measurements at service condition to be carried out,
  - insulation measurements to be carried out.

Renewal surveys are to cover 30% of the initial survey measuring points.

Note 1: Renewal survey requirements are to be compared to the habitability requirements when the notation was assigned. More recent requirements may be considered on Owner request.

7 Survey of additional class notation DRILL

7.1 Application

7.1.1 Requirements given in the present Article are additional to those given in the relevant Sections of the present Chapter.

These requirements are applicable only when the additional class notation **DRILL** has been assigned to the unit.

For survey requirements and for periodical surveys refer to NR570, Section 4.

8 Survey of additional class notation OHS

8.1 Periodical surveys

8.1.1 Requirements regarding periodical surveys, lay-up and re-commissioning surveys, are given in NR595, Section 4.

9 Survey of service notation Lifting

9.1 General

9.1.1 The requirements of this Article are additional to those laid down in NR525 or NR595, whichever is applicable.

9.2 Annual survey

9.2.1 The survey is to include verification and testing of the lifting equipment, as follows:

- verification of the presence onboard of the following documents:
  - technical manual
  - planned maintenance system
- general examination of the electrical cabling
- functional testing of the main and alternative two-way communication system at the lifting operating position
- verification of the structural arrangement and foundations of the lifting equipment
- testing of hydraulic installations
- load tests in accordance with the rules or requirements referred to in the lifting equipment certificate.

9.3 Class renewal survey

9.3.1 The requirements given in Rule Notes NR526 and NR595 are applicable for renewal survey.

In addition, load tests in accordance with the rules or requirements referred to in the lifting equipment certificate are to be carried out.

10 Survey of additional class notation HEL

10.1 Application

10.1.1 The requirements of this Article apply to units which have been assigned the additional class notation **HEL** defined in Ch 1, Sec 2, [8.4].

10.2 Annual survey

10.2.1 The Society considers that as a minimum these following issues are to be examined during the periodic surveys to confirm that there has been no alteration or deterioration in the condition of the helicopter landing area:

a) The general examination of the physical characteristics of the helideck is to include:
- the dimensions as measured
- the declared D-value
- the deck shape, and
- the scale drawings of deck arrangement.

b) The general examination of the preservation of obstacle-protected surfaces is to include:
- the minimum 210° Obstacle Free Sector (OFS) surface
- the 150° Limited Obstacle Sector (LOS) surface, and
- the minimum 180° falling 5:1 gradient surface with respect to significant obstacles.

Note 1: If one or more of these surfaces is infringed due, for example, to the proximity of an adjacent installation or vessel, an assessment is to be made to determine any possible negative effect which may lead to operating restrictions.

c) The general examination of the marking and lighting is to include:
- the adequate helideck perimeter lighting
- the adequate helideck touchdown marking lighting (“H” and TD/PM Circle lighting) and/or floodlighting
- the status lights (for day and night operations)
- the helideck markings
- the dominant obstacle paint schemes and lighting, and
- the general installation lighting levels including floodlighting.

Note 2: Note: Where inadequate helideck lighting exists the Helideck Limitation List (HLL) is to be annotated 'daylight only operations'.

d) The general examination of the deck surface is to include:
- the surface friction
- the Helideck net (as applicable)
- the drainage system
- the deck edge perimeter safety netting
- the tie-down points, and
- the cleaning of all contaminants (to maintain satisfactory recognition of helideck markings and preservation of the helideck friction surface).

e) The verification of the environment effects is to include:
- foreign object damage
- air quality degradation due to exhaust emissions, hot and cold vented gas emissions and physical turbulence generators
- bird control
- any adjacent helideck/installation having significant environmental effects in any air quality assessment, and
- flares.

f) The general examination of the rescue and fire-fighting facilities is to include:
- the primary and complementary media types, quantities, capacity and systems
- the Personal Protective Equipment (PPE), and
- the crash box.

g) The general examination of the communications and navigation system arrangements is to include:
- the aeronautical radio(s)
- the radio/telephone (R/T) call sign to match helideck name and side identification which should be simple and unique
- the Non-Directional Beacon (NDB) or equivalent (as appropriate), and
- the radio log.

h) The general examination of the Fuelling facilities is to include:
- the fuel system, ventilation, fire protection and detection
- the pump and aircraft bonding safety systems.

i) The general examination of the additional operational and handling equipment is to include:
- the windsock
- the meteorological information (recorded by an automated means)
- the Helideck Motion System recording and reporting (where applicable)
- the passenger briefing system
- the chocks
- the tie-downs, and
- the weighing scales for passengers, baggage and freight.

11 Survey of additional class notation OAS

11.1 Periodical surveys

11.1.1 Requirements regarding periodical surveys are given in NI629 Classification of Offshore Access Systems.

12 Survey of additional class notations SUSTAINABILITY-1 and SUSTAINABILITY-2

12.1 General

12.1.1 The requirements of this Article apply to ships which have been assigned the additional class notations **SUSTAINABILITY-1** or **SUSTAINABILITY-2** as defined in Ch 1, Sec 2, [8.4.13].

12.1.2 When modifications, alterations or repairs have occurred, which may affect the noise and vibration environment, the Owner is to inform the Society in order to submit the unit to a survey so as to maintain the additional class notations.

12.2 First annual survey

12.2.1 Confirmation of no discharge period

During the first annual survey, the Surveyor is to collect the results of tests and measurements undertaken by the Owner according to Pt C, Ch 5, Sec 1, [4.2.2].

12.2.2 Audit

An onboard audit of the operational procedures, as required in Pt C, Ch 5, Sec 1, Tab 2 is to be done by the Surveyor in order to ascertain that the Master and crew are familiar with the unit's onboard procedures for preventing pollution and in order to check that the discharge records mentioned in Pt C, Ch 5, Sec 2, [1] are properly completed.

12.3 Annual survey

12.3.1 The Owner or his representative is to declare to the attending Surveyor that no significant alterations have been made, without prior approval from the Society, to the equipment and arrangements related to sustainability and covered by Part C, Chapter 5.

12.3.2 Ozone-depleting substances

The survey is to include the following items:

- verification that the procedures for regular checking of systems with ozone-depleting substances are available on board and confirmation that personnel in charge are identified
- confirmation that appropriate entries are being made in the record book for ozone-depleting substances.

12.3.3 Prevention of sea pollution

The survey is to include, as far as practicable:

- confirmation that the IOPP and ISPP certificates are available on board and due surveys are up to date
- confirmation that the ballast water management plan is available on board
- external examination of the most important components of the sewage treatment plant, the garbage treatment plant, the oil filtering equipment, the incinerators if fitted, the comminuters and grinders, the hazardous wastes recovery unit if fitted
- general examination of the holding tanks, including examination of a possible corrosion protection of the inside surfaces of the tanks which are to be in good condition
- verification of the satisfactory condition of the standard discharge connections for oil and wastewater
- external examination and operating tests of the following equipment and systems:
  - systems and equipment for the prevention of pollution by oil, as required in Pt C, Ch 5, Sec 2, [1.4] and Pt C, Ch 5, Sec 3, [1.3]
  - sewage and greywater installation and treatment plants and advanced wastewater treatment plant, if fitted
  - hazardous waste recovery unit, if fitted, comminuters and grinders
  - refrigerant leakage prevention and retention facilities
  - fire-fighting media containment and disposal equipment
- confirmation that the hazardous wastes are stowed as specified in the garbage management plan
- ascertainment of the correct concentration of the disinfectant in the effluent of the sewage or wastewater treatment plant
- ascertainment of possible concentration of other chemicals in the effluent of the sewage or wastewater treatment plant.

12.3.4 Prevention of air pollution

The survey is to include:

- confirmation that the IAPP is valid and that each concerned engine has a valid EIAPP certificate

- external examination and operating tests of the following equipment and systems:
  - hydrocarbon blanket gas system
  - vent recovery system
  - SCR or other NOx reducing system, if fitted
- confirmation that the NOx emission control procedure is available on board and confirmation that personnel in charge are identified
- verification that the procedures for defining, ordering and checking fuel oils for control of SOx emission are available on board and confirmation that personnel in charge are identified
- when an onboard incinerator is fitted:
  - verification that the ISPP certificate is valid
  - external examination of the incinerator and confirmation that such equipment operates satisfactorily
  - test of the alarms, exhaust monitoring devices and emergency stop located outside the compartment.

12.3.5 Energy efficiency and GHG emission management

The survey is to include:

- confirmation that the Energy efficiency and GHG emission managment plan is on board and the record books are kept up to date and confirmation that personnel in charge are identified
- verification that the personnel in charge are trained to implement the energy efficiency and GHG emission, improvement measures and corrective actions

12.3.6 Review of records

It is to be confirmed that appropriate entries are being made in the following records books for the period since the previous survey:

- oil record book
- garbage record book
- records of ballast exchanges after international voyages and ballast water record book, if applicable
- sewage and grey water discharge book
- NOx emissions records
- fuel oil sulphur content records
- results of the tests on effluents and wastes done by the Owner according to Pt C, Ch 5, Sec 1, [4.2.3]
- energy efficiency and GHG emission Key Performance Indicators (KPIs)
- operational activities related to energy efficiency and GHG emission improvement
- execution of energy efficiency and GHG emission improvement measures and corrective actions.

12.3.7 The annual survey is to include verification as per [6.2.1].

12.4 Class renewal survey

12.4.1 In addition to the requirements of [12.3], the class renewal survey is to include:

- demonstration, under working conditions, of the correct functioning of the most important components of the sewage treatment plant or AWT plant if fitted, the garbage treatment plant, the oil filtering equipment, the incinerators if fitted, the comminuters and grinders, the hazardous waste recovery unit if fitted
- ascertainment of the correct functioning of the alarms
- confirmation of the operation and calibration of the emissions analysers, if fitted
- verification as per [6.3.1].

Section 10 Suspension and Withdrawal of Class

1 General

1.1 Discontinuance of class

1.1.1 The class may be discontinued either temporarily or permanently. In the former case it is referred to as “suspension” of class, in the latter case as “withdrawal” of class. In both these cases, the class is invalidated in all respects. In the case of withdrawal, the name of the offshore unit is deleted from the Register. The current version of the Register can be consulted on the Society website.

1.2 Suspension of class

1.2.1 The class may be suspended either automatically or following the decision of the Society. In any event, the offshore unit will be considered as not retaining its class from the date of suspension until the date when class is reinstated.

1.2.2 The class may be automatically suspended when one or more of the following circumstances occur:

- when a offshore unit is not operated in compliance with the rule requirements, such as in cases of services or conditions not covered by the service notation, or trade outside the navigation restrictions for which the class was assigned
- when a offshore unit proceeds to sea with less freeboard than that assigned, or has the freeboard marks placed on the sides in a position higher than that assigned, or, in cases of offshore unit where freeboard are not assigned, the draught is greater than that assigned
- when the Owner fails to inform the Society in order to submit the offshore unit to a survey after defects or damages affecting the class have been detected
- when repairs, alterations or conversions affecting the class are carried out either without requesting the attendance of the Society or not to the satisfaction of the Surveyor.

Suspension of class with respect to the above cases will remain in effect until such time as the cause giving rise to suspension has been removed. Moreover, the Society may require any additional surveys deemed necessary taking into account the condition of the offshore unit and the cause of the suspension.

1.2.3 In addition, the class is automatically suspended:

- When the class renewal survey has not been completed by its limit date or within the time granted for the completion of the survey, unless the offshore unit is under attendance by the Society’s Surveyors with a view to completion prior to resuming trading.
- When the annual or intermediate surveys have not been completed by the end of the corresponding survey time window (see Ch 2, Sec 1, [2.1.3]) unless the offshore unit is under attendance for completion of the survey.

  Continuous survey item(s) due or overdue at the time of annual surveys is (are) to be dealt with. The offshore unit's class will be subject to a suspension procedure if the item(s) is (are) not surveyed or postponed by agreement with the Society.

Suspension of class with respect to the above cases will remain in effect until such time as the class is reinstated once the due items and/or surveys have been dealt with.

1.2.4 In addition to the circumstances for which automatic suspension may apply, the class of a offshore unit may also be suspended following the decision of the Society:

- when a condition of class is not dealt with within the time limit specified, unless it is postponed before the limit date by agreement with the Society
- when one or more surveys are not held by their limit dates (see Ch 2, Sec 1, [2.1.4]) or the dates stipulated by the Society also taking into account any extensions granted in accordance with the provisions of Part A
- when, due to reported defects, the Society considers that a offshore unit is not entitled to retain its class even on a temporary basis (pending necessary repairs or renewals, etc.)
- when the offshore unit has not been maintained in proper condition, as set forth in Ch 1, Sec 1, [3.3.2]
- in other circumstances which the Society will consider on their merits (e.g. in the event of non-payment of fees or where the Owner fails to render the offshore unit available for the occasional surveys) as listed in Ch 2, Sec 1, [6.1.1].

Suspension of class decided by the Society takes effect from the date when the conditions for suspension of class are met and will remain in effect until such time as the class is reinstated once the due items and/or surveys have been dealt with.

1.3 Withdrawal of class

1.3.1 The Society will withdraw the class of a offshore unit in the following cases:

- at the request of the Owner
- as a rule, when the causes that have given rise to a suspension currently in effect have not been removed within six months after due notification of suspension to the Owner
- when the offshore unit is reported as a constructive total loss
- when the offshore unit is lost
- when the offshore unit is reported scrapped.

Withdrawal of class may take effect from the date on which the circumstances causing such withdrawal occur.

The contract for the classification of the offshore unit is terminated as of right in the above cases.

The class is also withdrawn according to the provisions of article 9 of the Marine & Offshore Division General Conditions in case of contract termination.

1.3.2 When the withdrawal of class of a offshore unit comes into effect, the Society will:

- forward the Owner written notice
- delete the offshore unit from the Register
- notify the flag Administration
- make the information available to the Underwriters, at their request.

1.4 Suspension/withdrawal of additional class notations

1.4.1 If the survey requirements related to maintenance of additional class notations are not complied with, the suspension or withdrawal may be limited to the notations concerned.

The same procedure may apply to service notations of offshore unit which are assigned with more than one service notation.

1.4.2 The suspension or withdrawal of an additional class notation or a service notation (where a offshore unit is assigned with more than one service notation) generally does not affect the class.

Appendix 1 Thickness Measurements: Extent, Determination of Locations, Acceptance Criteria

1 General

1.1 Aim of the Appendix

1.1.1 Thickness measurements are a major part of surveys to be carried out for the maintenance of class, and the analysis of these measurements is a prominent factor in the determination and extent of the repairs and renewals of the unit's structure.

1.1.2 This Appendix is intended to provide Owners, companies performing thickness measurements and the Society's Surveyors with a uniform means with a view to fulfilling Rule requirements for thickness measurements. In particular, it will enable all the above-mentioned parties to carry out:

- the planning and preparation
- the determination of extent and location, and
- the analysis

of the thickness measurements in cooperation.

1.2 Scope of the Appendix

1.2.1 Separate Articles below provide the following information:

- references to rule requirements and some additional information on the extent of the thickness measurements to be performed during surveys according to types of unit and related surveys (see Article [2])
- locations of the measurements for the main parts of the unit (see Article [3])
- acceptance criteria of thickness measurements (see Article [4]).

Tables and sketches are also given to detail the above points according to the types of units.

2 Extent of measurements

2.1 General

2.1.1 For the maintenance of class, thickness measurements may be required during annual, intermediate and class renewal surveys.

Tab 1 gives the references to the requirements for minimum thickness measurements.

Some additional explanations are also given about the wording used in the Rules as well as the general principles of the required thickness measurements during class renewal surveys.

Table 1 : References to requirements related to thickness measurements

Structural type notation / Service notation	Type of survey		
	Class renewal	Intermediate	Annual
surface units: **offshore ship** **offshore barge** except when the service notation **drilling** is assigned	Systematic measurements and suspect areas: Ch 2, Sec 4, [2.5] and Ch 2, Sec 4, Tab 3 Where substantial corrosion is found, the extent of thickness measurements may be increased to the Surveyor's satisfaction, using Ch 2, Sec 4, Tab 7 as guidance	Ch 2, Sec 3, Tab 1 Thickness measurements to be taken if deemed necessary by the Surveyor Where substantial corrosion is found, the extent of thickness measurements may be increased to the Surveyor's satisfaction, using Ch 2, Sec 4, Tab 7 as guidance	Areas of substantial corrosion identified at previous surveys: Ch 2, Sec 2, [2.1.2] Where substantial corrosion is found, the extent of thickness measurements may be increased to the Surveyor's satisfaction, using Ch 2, Sec 4, Tab 7 as guidance

Structural type notation / Service notation	Type of survey		
	Class renewal	Intermediate	Annual
column stabilized unit **offshore TLP** except when the service notation **drilling** is assigned	Systematic measurements and suspect areas: Ch 2, Sec 4, [2.5] and Ch 2, Sec 4, Tab 4 Where substantial corrosion is found, the extent of thickness measurements may be increased to the Surveyor's satisfaction, using Ch 2, Sec 4, Tab 7 as guidance	Ch 2, Sec 3, Tab 1 Thickness measurements to be taken if deemed necessary by the Surveyor Where substantial corrosion is found, the extent of thickness measurements may be increased to the Surveyor's satisfaction, using Ch 2, Sec 4, Tab 7 as guidance	Areas of substantial corrosion identified at previous surveys: Ch 2, Sec 2, [2.1.2] Where substantial corrosion is found, the extent of thickness measurements may be increased to the Surveyor's satisfaction, using Ch 2, Sec 4, Tab 7 as guidance
self-elevating unit except when the service notation **drilling** is assigned	Systematic measurements and suspect areas: Ch 2, Sec 4, [2.5] and Ch 2, Sec 4, Tab 6 Where substantial corrosion is found, the extent of thickness measurements may be increased to the Surveyor's satisfaction, using Ch 2, Sec 4, Tab 7 as guidance	Ch 2, Sec 3, Tab 1 Thickness measurements to be taken if deemed necessary by the Surveyor Where substantial corrosion is found, the extent of thickness measurements may be increased to the Surveyor's satisfaction, using Ch 2, Sec 4, Tab 7 as guidance	Areas of substantial corrosion identified at previous surveys: Ch 2, Sec 2, [2.1.2] Where substantial corrosion is found, the extent of thickness measurements may be increased to the Surveyor's satisfaction, using Ch 2, Sec 4, Tab 7 as guidance
offshore buoy	see NR494	see NR494	see NR494
drilling	Ch 2, Sec 5, [4] Extent of thickness measurements: • surface unit: Ch 2, Sec 5, Tab 1 • self-elevating unit: Ch 2, Sec 5, Tab 2 • column stabilized unit: Ch 2, Sec 5, Tab 3 Ch 2, Sec 5, Tab 4, according to the different locations, where substantial corrosion is found.	Ch 2, Sec 5, [3] Ch 2, Sec 5, Tab 4, according to the different locations, where substantial corrosion is found.	Ch 2, Sec 5, [2] Ch 2, Sec 5, Tab 4, according to the different locations, where substantial corrosion is found.
oil storage	Planning and general requirements: Ch 2, Sec 6, [6.1] and Ch 2, Sec 6, [6.4] Ch 2, Sec 6, Tab 3 and Ch 2, Sec 6, Tab 4 Extent of systematic thickness measurements: Ch 2, Sec 6, Tab 5 Ch 2, Sec 6, Tab 6 and Ch 2, Sec 6, Tab 7, according to the different locations, where substantial corrosion is found	Ch 2, Sec 6, [4] Ch 2, Sec 6, Tab 6 and Ch 2, Sec 6, Tab 7, according to the different locations, where substantial corrosion is found	Ch 2, Sec 6, [2.3] Limited to salt ballast tanks and when deemed necessary by the Surveyor Ch 2, Sec 6, Tab 6 and Ch 2, Sec 6, Tab 7, according to the different locations, where substantial corrosion is found
liquified gas storage	Planning and general requirements: Ch 2, Sec 7, [6.1]and Ch 2, Sec 7, [6.4] Elements subjected to close-up survey: Ch 2, Sec 7, Tab 2 Extent of systematic thickness measurements: Ch 2, Sec 7, Tab 3 Where substantial corrosion is found, the extent of thickness measurements may be increased to the Surveyor's satisfaction, using Ch 2, Sec 4, Tab 7 as guidance	Ch 2, Sec 7, Tab 1 Thickness measurements to be taken if deemed necessary by the Surveyor Where substantial corrosion is found, the extent of thickness measurements may be increased to the Surveyor's satisfaction, using Ch 2, Sec 4, Tab 7 as guidance	Ch 2, Sec 7, [2.4.2] Limited to salt ballast tanks and when deemed necessary by the Surveyor Where substantial corrosion is found, the extent of thickness measurements may be increased to the Surveyor's satisfaction, using Ch 2, Sec 4, Tab 7 as guidance

3 Number and locations of measurements

3.1 General

3.1.1 Considering the extent of thickness measurements as required by the Rules and indicated in Article [2], the locations of the points to be measured are given here for the most important items of the structure. Thus the number of points can be estimated.

3.2 Locations of points

3.2.1 Tab 2 provides explanations and/or interpretations for the application of those requirements indicated in the Rules which refer to both systematic thickness measurements related to the calculation of global hull girder strength (for surface unit) and specific measurements connected to close-up surveys.

Figures are also given to facilitate the explanations and/or interpretations given in the table. These figures show typical arrangements and they may be used as guidance for units other than those illustrated.

Table 2 : Interpretations of rule requirements for the locations and number of points to be measured

A) SYSTEMATIC MEASUREMENTS		
ITEM	INTERPRETATION	FIGURE
Selected plates on deck, tank top, bottom, double bottom and wind and water (for all unit types)	"Selected" means at least a single point on one out of three plates, to be chosen on representative areas of average corrosion	No figure
All deck, tank top and bottom plates and wind and water strakes (for all units types)	At least two points on each plate to be taken either at each 1/4 extremity of plate or at representative areas of average corrosion	No figure
Transverse section	Refer to the definition given in Pt A, Ch 2, Sec 2, [2.2.5] of the Ship rules. One point to be taken on each plate. Both web and flange to be measured on longitudinals. For unit with cargo tank older than 10 years of age: within 0,1D (where D is the ship's moulded depth) of the deck and bottom at each transverse section to be measured, every longitudinal and girder is to be measured on the web and face plate, and every plate is to be measured at one point between longitudinals	Surface unit: Fig 1 (single hull) and Fig 2 (double hull) For pontoon of column-stabilized unit and TLP: Fig 11
Transverse rings **(1)**	At least two points on each plate in a staggered pattern and two points on the corresponding flange where applicable. Minimum 4 points on the first plate below deck. Additional points in way of curved parts. At least one point on each of two stiffeners between stringers / longitudinal girders	Surface unit: Fig 3 (single hull) and Fig 4 (double hull) For pontoon of column-stabilized unit and TLP: Fig 12
Bulkheads on units other than: • oil storage **(2)** • chemical storage **(2)** • liquefied gas storage **(2)**	"Selected bulkheads" means at least 50% of the bulkheads	Fig 5 for general bulkhead For pontoon of column-stabilized unit and TLP: Fig 13
Selected internal structure such as floors and longitudinals, transverse frames, web frames, deck beams, 'tweendecks, girders	The internal structural items to be measured in each space internally surveyed are to be at least 20% within the cargo area and 10% outside the cargo area	Fig 6
One section of deck plating for the full beam of the surface unit within the cargo area	Two single points on each deck plate (to be taken either at each 1/4 extremity of plate or at representative areas of average corrosion) in the transverse section concerned	No figure
All cargo hold hatch covers and coamings	Including plates and stiffeners	Fig 7 for units fitted with hold hatch covers and coamings

Girth belt	It is applicable for column-stabilized units and TLP. It represent the sectional and rings of the main structural element. It is a section for pontoon. It is an elevation for column. It is a main framing for upper hull. On section of the girth belt, one point to be taken on each plate. Both web and flange to be measured on longitudinals. On ring of the girth belt, at least two points on each plate in a staggered pattern and two points on the corresponding flange where applicable. Minimum 4 points on the first plate below deck. Additional points in way of curved parts. At least one point on each of two stiffeners between stringers/girders.	Column section: Fig 14 Node junction (ring type): Fig 15
(1) Transverse rings means all transverse material appearing in a cross-section of the unit's hull, in way of a double bottom floor, vertical web and deck transverse. **(2)** For these units refer to B)		

B) CLOSE-UP SURVEYS AND RELATED MEASUREMENTS (oil storage and liquefied gas storage)		
ITEM	INTERPRETATION	FIGURE
Web frame ring (for oil storage)	Refer to the definition given in Ch 2, Sec 6, Tab 3 and Ch 2, Sec 6, Tab 4 "Adjacent structural members" means plating and stiffeners of deck, bottom, double bottom, sides and longitudinal bulkheads in the vicinity of the web frame ring	Extent of area is shown as ① in Ch 2, Sec 6, Fig 1 Location of points are given in Fig 3
Transverse section (for chemical and liquefied gas storage)	Refer to the definitions given in Ch 2, Sec 7, Tab 2 "Adjacent structural members" means plating and stiffeners of deck, bottom, double bottom, sides and longitudinal bulkheads in the vicinity of the web frame ring	No figure
Deck transverse	This is the upper part of the web frame ring including the adjacent structural members (see meaning given above).	Extent of area is shown as ② in Ch 2, Sec 6, Fig 1 Location of points are given in Fig 3
Deck and bottom transverses (for oil storage)	Refer to the definition given in Ch 2, Sec 6	Extent of area is shown as ② and ⑤ in Ch 2, Sec 6, Fig 1 Location of points are given in Fig 3
Transverse bulkheads	"Complete" means the whole bulkhead including stringers and stiffeners and adjacent structural members as defined above	Extent of area is shown as ③ in Ch 2, Sec 6, Fig 1 Location of points are given in Fig 8
	"Lower part" means lower part of bulkhead up to 1/4 of ship's depth or 2 metres above the lower stringer, whichever is the greater (stringers, stiffeners and adjacent structural members included)	Extent of area is shown as ④ in Ch 2, Sec 6, Fig 1 Location of points are given in Fig 8
Transverse bulkheads in cargo tanks for oil storage with double hull	At least two points on each plate. Minimum 4 points on the first plate below main deck At least one point on every third stiffener to be taken between each stringer At least two points on each plate of stringers and girders, and two points on the corresponding flange. Additional points in way of curved part Two points of each diaphragm plate of stools, if fitted.	Fig 9

Transverse bulkheads in ballast tanks for oil storage with double hull	At least 4 points on plates between stringers / longitudinal girders, or per plate if stringers/ girders not fitted At least two points on each plate of stringers and girders, and two points on the corresponding flange. Additional points in way of curved part At least one point on two stiffeners between each stringer / longitudinal girder	Fig 10
Adjacent structural members (for oil storage)	On adjacent structural members one point per plate and one point on every third stiffener/ longitudinal	No figure
All plating and internal structures (for chemical and liquefied gas storage)	Refer to the definitions given in Ch 2, Sec 7	No figure

Figure 1 : Location of measurements on transverse section for surface unit (single hull)

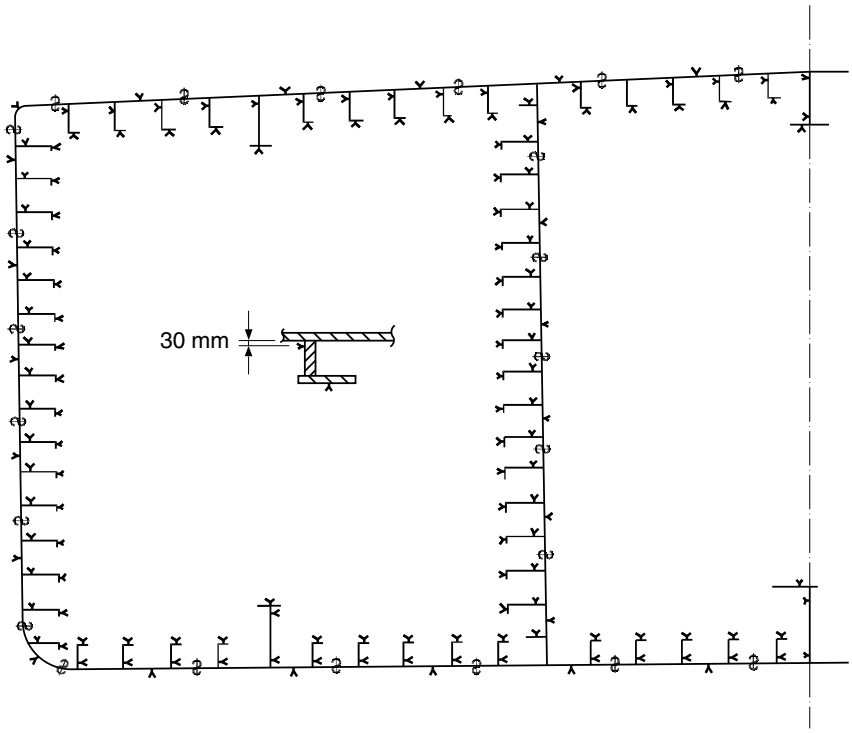

Figure 2 : Location of measurements on transverse section for surface unit (double hull)

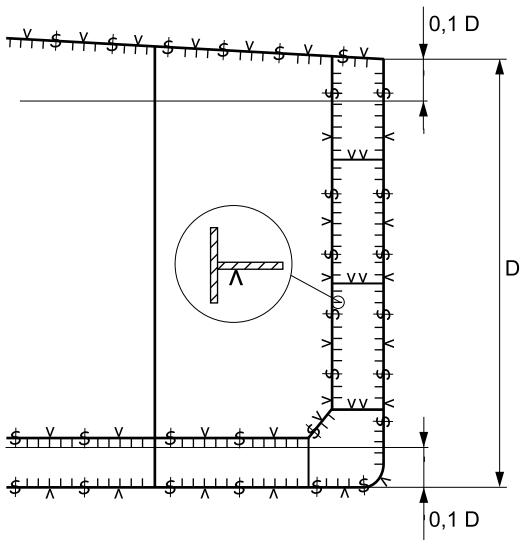

Figure 3 : Location of measurements on web frame rings and longitudinal elements for oil storage (single hull)

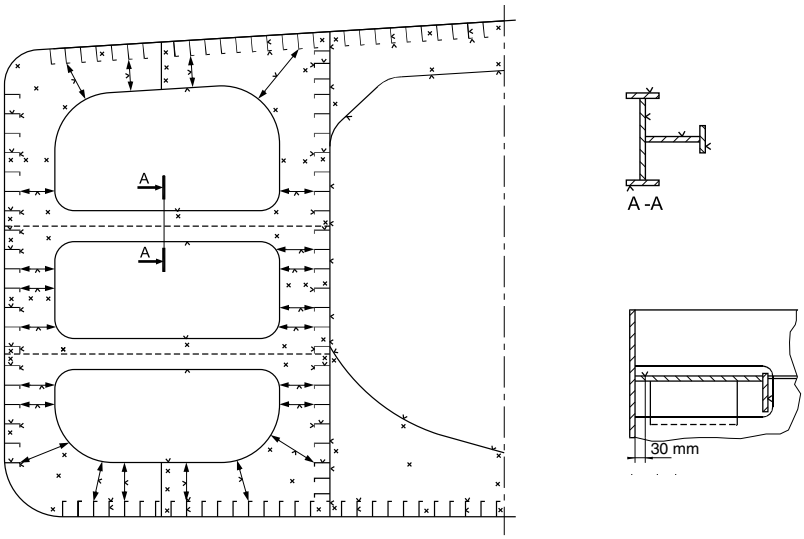

Figure 4 : Location of measurements on web frame rings and longitudinal elements for oil storage (double hull)

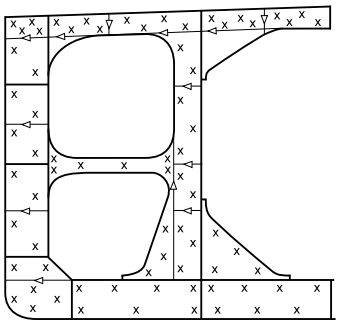

Figure 5 : Locations of measurements on bulkheads (general)

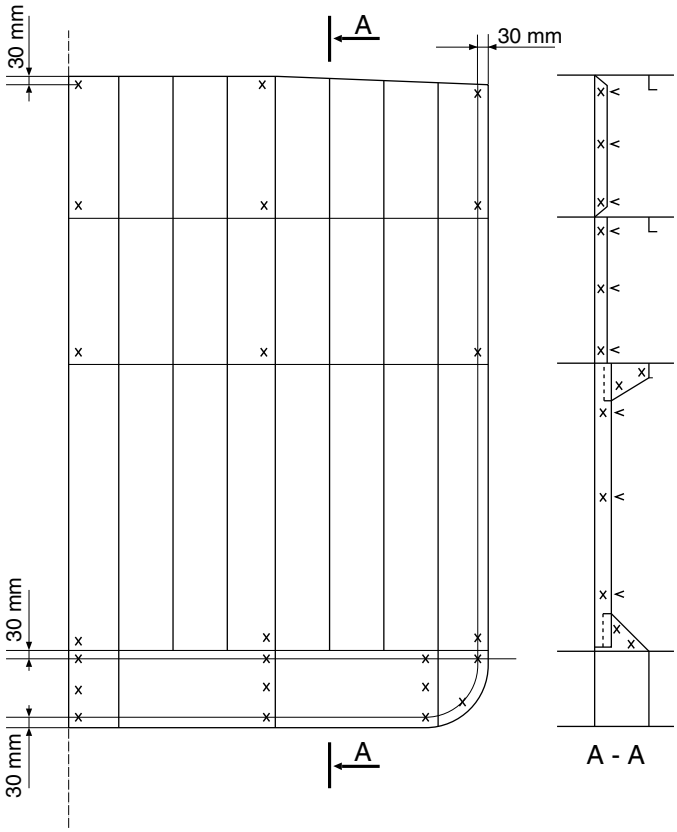

Figure 6 : Locations of measurements on selected internal structural elements of general cargo unit

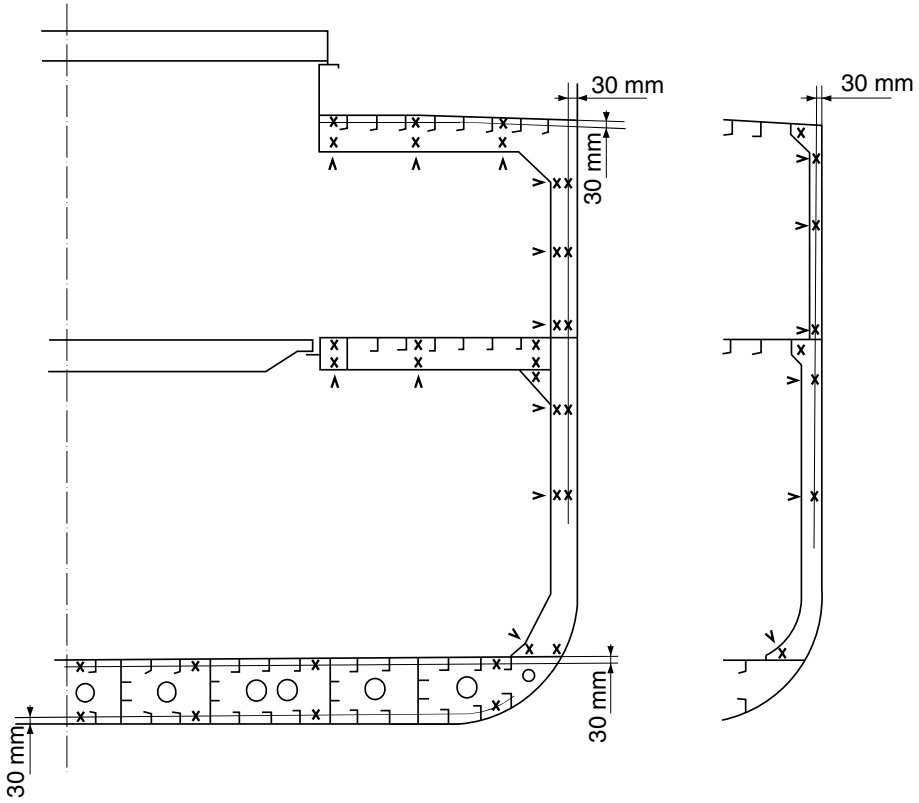

Figure 7 : Locations of measurements on hatch covers and coamings

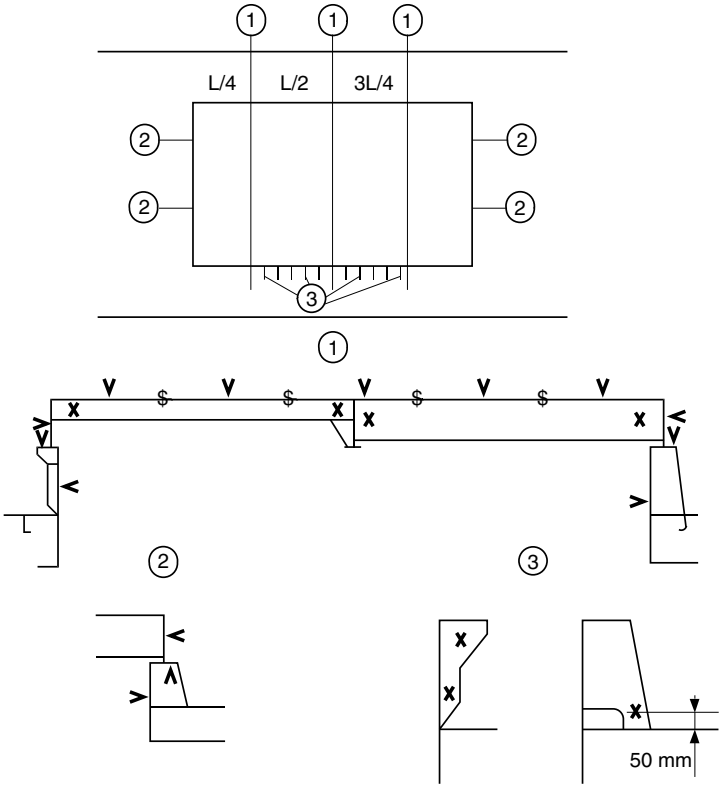

(1) Three sections at L/4, L/2, 3L/4 of hatch cover length, including:

- one measurement of each hatch cover plate and skirt plate
- measurements of adjacent beams and stiffeners
- one measurement of coaming plates and coaming flange, each side

(2) Measurements of both ends of hatch cover skirt plate, coaming plate and coaming flange

(3) One measurement of one out of three hatch coaming brackets and bars, on both sides and both ends

Figure 8 : Locations of measurements on transverse bulkheads (oil storage)

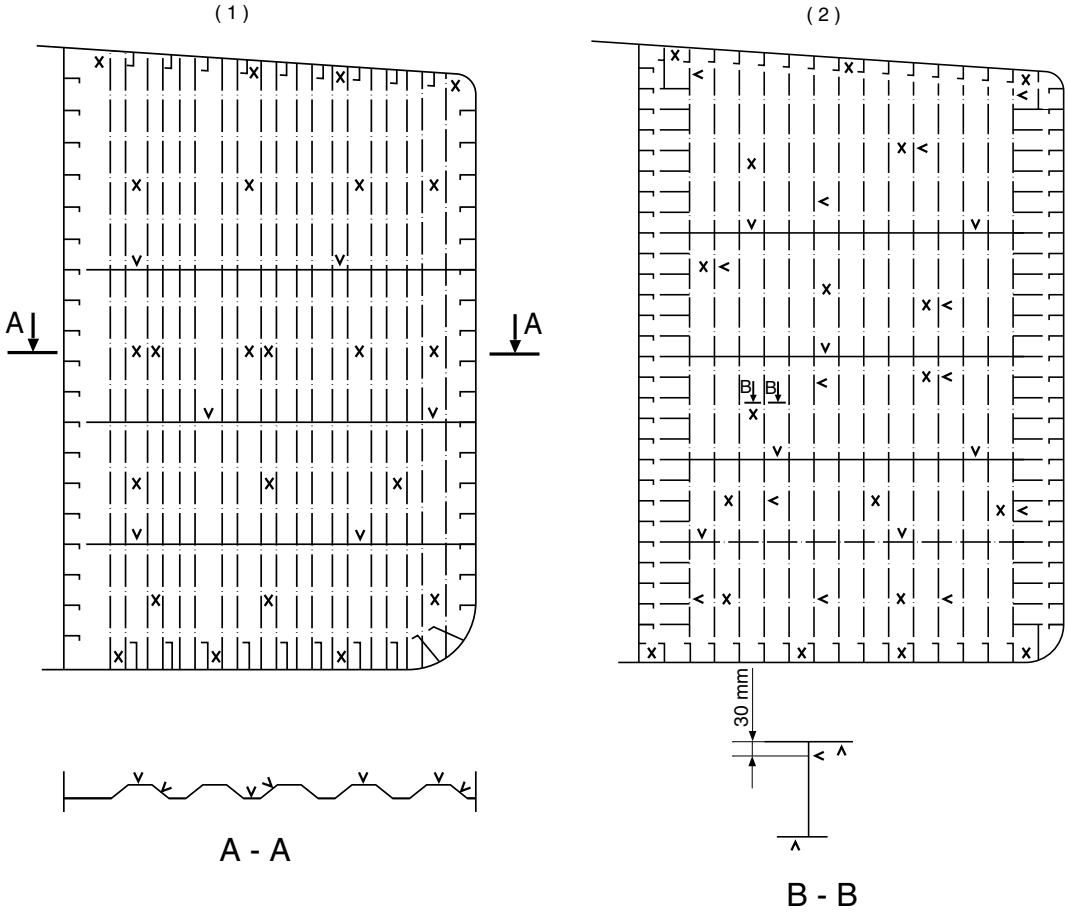

Figure 9 : Location measurements on transverse bulkheads In cargo tanks

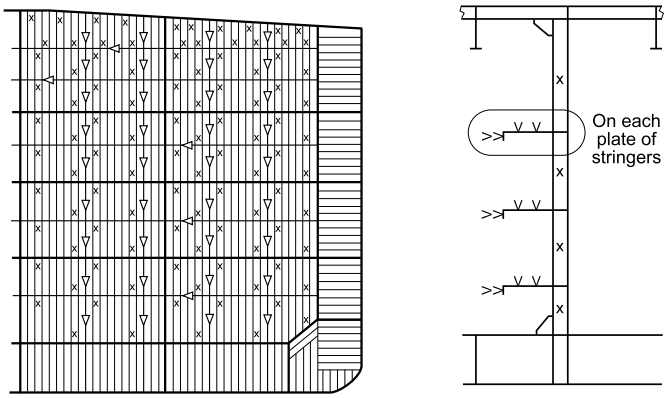

Figure 10 : Location of measurements on transverse bulkhead in ballast tanks

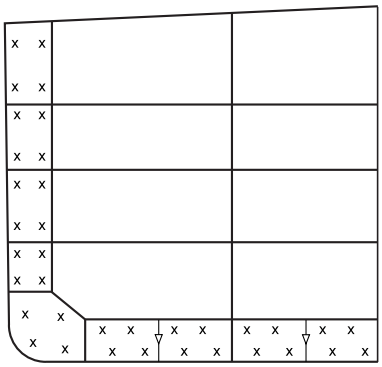

Figure 11 : Typical location of measurement for pontoon normal transverse section of column-stabilized unit and TLP

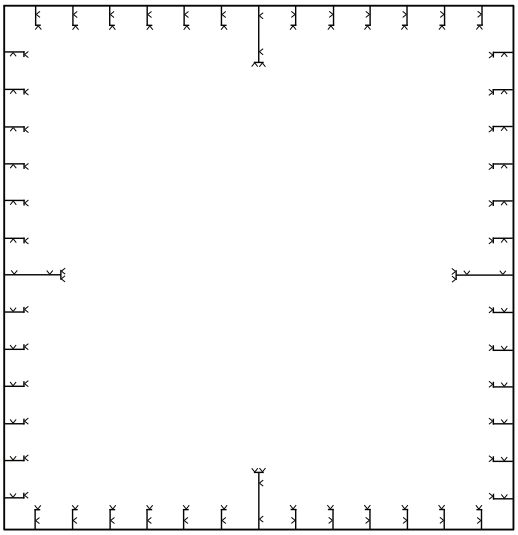

Figure 12 : Typical location of measurement for pontoon reinforced transverse section of column-stabilized unit and TLP

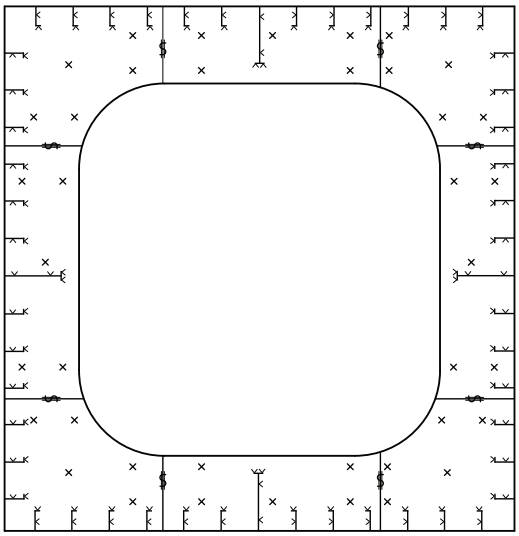

Figure 13 : Typical location of measurement for pontoon bulkhead of column-stabilized unit and TLP

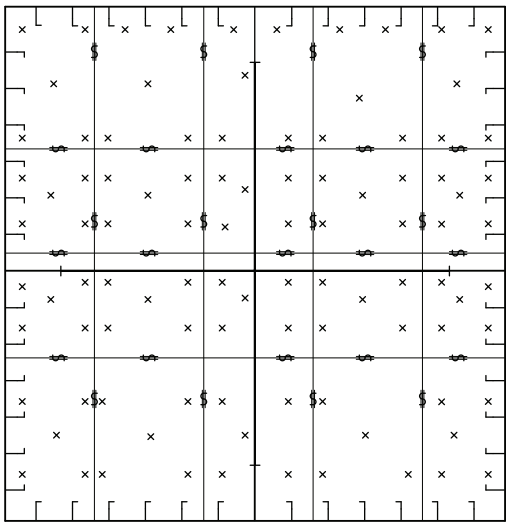

Figure 14 : Typical location of measurement for column-stabilized unit and TLP

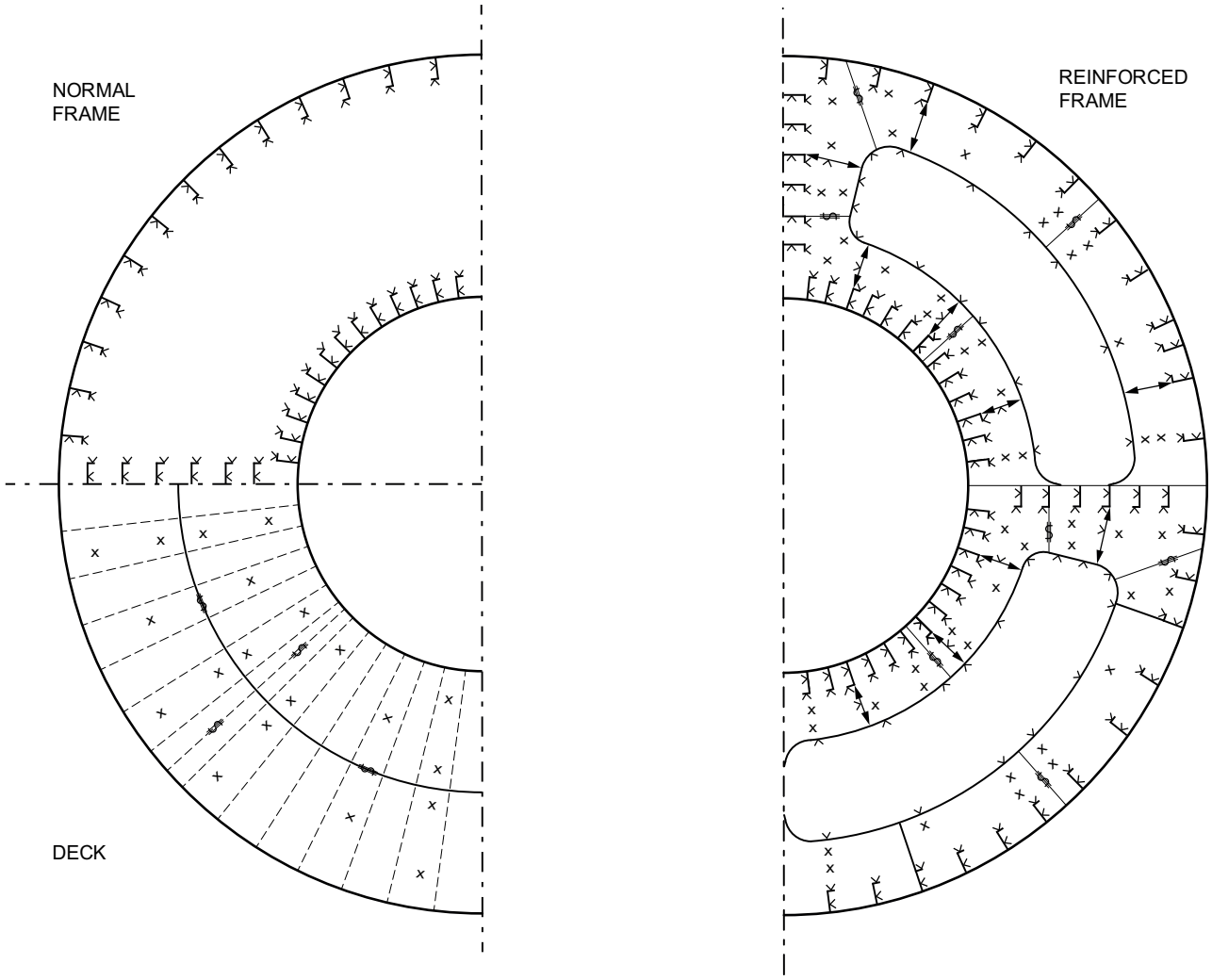

Figure 15 : Typical location of measurement for junction node of column-stabilized unit and TLP

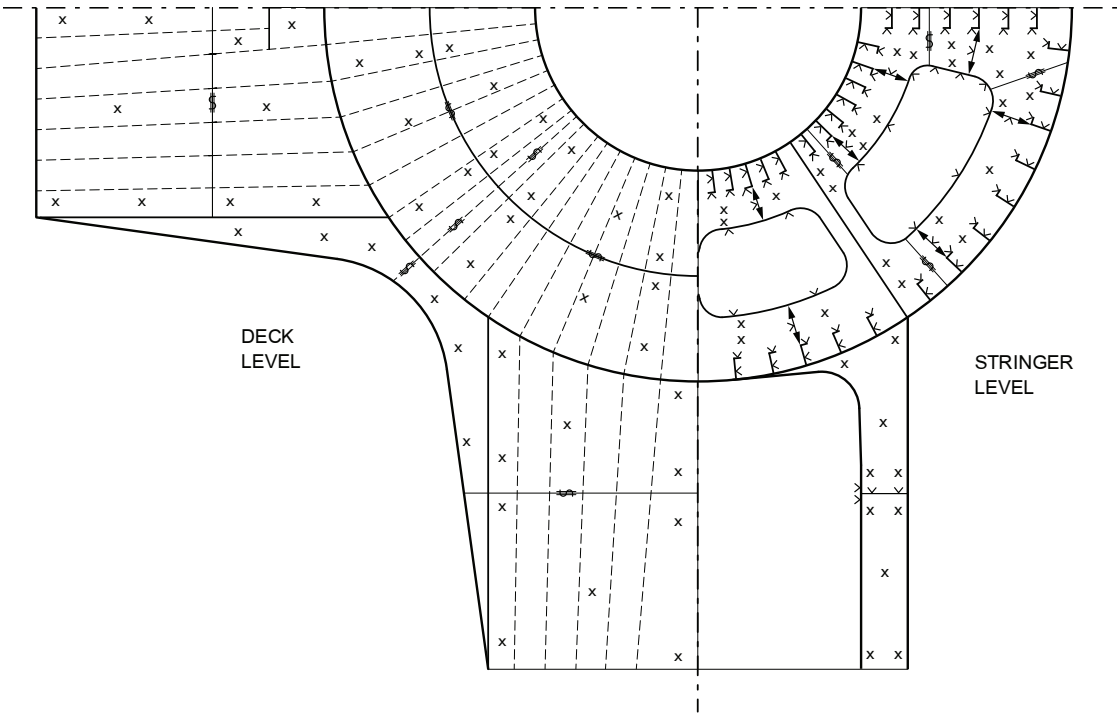

4 Acceptance criteria for thickness measurements

4.1 General

4.1.1 Acceptance criteria stipulate limits of wastage which are to be taken into account for reinforcements, repairs or renewals of steel structure. These limits are generally expressed for each structural item as a maximum percentage of acceptable wastage (W). When the maximum percentage of wastage is indicated, the minimum acceptable thickness (t_{min}) is that resulting from applying this percentage to the rule thickness (t_{rule}), according to the following formula:

$$t_{min} = \left(1 - \frac{W}{100}\right) t_{rule}$$

However, when the rule thickness is not available, the as-built thickness can be used.

Note 1: When owner corrosion margin is mentionned on drawings, it may not be included in t_{rule}.

Only for criteria related to an item (see [4.3.4] b), the Society may establish a list of renewal thicknesses tailored to the different structural items. In such a case these thicknesses are used in lieu of the minimum thicknesses calculated from the percentage of wastage.

Note 2: In any case, at the request of the Owner, the Society may perform a direct calculation based on the current measurements.

4.1.2 In cases where the unit has some structural elements with reduced wear margins (e.g. due to unit conversion, increase of draught), the minimum acceptable thickness for these elements is to be calculated with reference to the rule scantlings without taking account of any reduction originally agreed.

4.1.3 Decisions on steel renewals are taken by the attending Surveyor applying the criteria given in this Article and based on his judgment and the actual condition of the ship. Should advice be needed to support his decision, the Surveyor may refer to the relevant technical office of the Society.

4.2 Criteria

4.2.1 The acceptance criteria for the minimum thicknesses are divided into:

- criteria on longitudinal strength for surface unit, given in [4.3]
- criteria on yield strength for column stabilized and TLP unit, given in [4.4]
- criteria on yield strength for self-elevating unit, given in [4.5]
- criteria for critical area, given in [4.6]
- criteria on buckling strength, given in [4.7] for surface unit
- criteria on pitting, given in [4.8].

4.2.2 Each measured structural item is to be checked against the above criteria, as far as applicable. When the criteria are not met, reinforcements, repairs and renewals are to be carried out as appropriate.

4.2.3 For yield strength, each structural item is to be assessed according to four different criteria which vary with regard to the domain under which it is considered, namely:

a) An isolated area, which is meant as a part of a single structural item. This criterion takes into consideration very local aspects such as grooving of a plate or web, or local severe corrosion; however, it is not to be used for pitting for which separate criteria are considered (see [4.8]).

b) An item, which is meant as an individual element such as a plate, a stiffener, a web, etc. This criterion takes into consideration the average condition of the item, which is assessed by determining its average thickness using the various measurements taken on the same item.

c) A group of items, which is meant as a set of elements of the same nature (plates, longitudinals, girders) contributing either to the longitudinal global strength of the unit in a given zone or to the global strength of other primary transverse elements not contributing to the unit longitudinal strength, e. g. bulkheads, hatch covers, web frames.

d) A zone for surface unit, which is meant as all and only longitudinal elements contributing to the longitudinal strength of the unit; in this regard, the three main zones are defined as deck zone, neutral axis zone and bottom zone. This criterion takes into consideration the average condition of all groups of items belonging to the same zone.

4.3 Longitudinal strength criteria for surface unit

4.3.1 Local and global strength criteria in the present Article are applicable to surface units.

These criteria may also be used for other unit types taking into consideration the equivalence or similarity of structural elements and their contribution to local and/or global strength.

4.3.2 For the evaluation of the surface unit longitudinal strength, it is a prerequisite that welding between longitudinal members and deck, side and bottom plating is maintained effective so as to keep continuity of hull structures.

Figure 16 : layout of items to be assessed for a surface unit

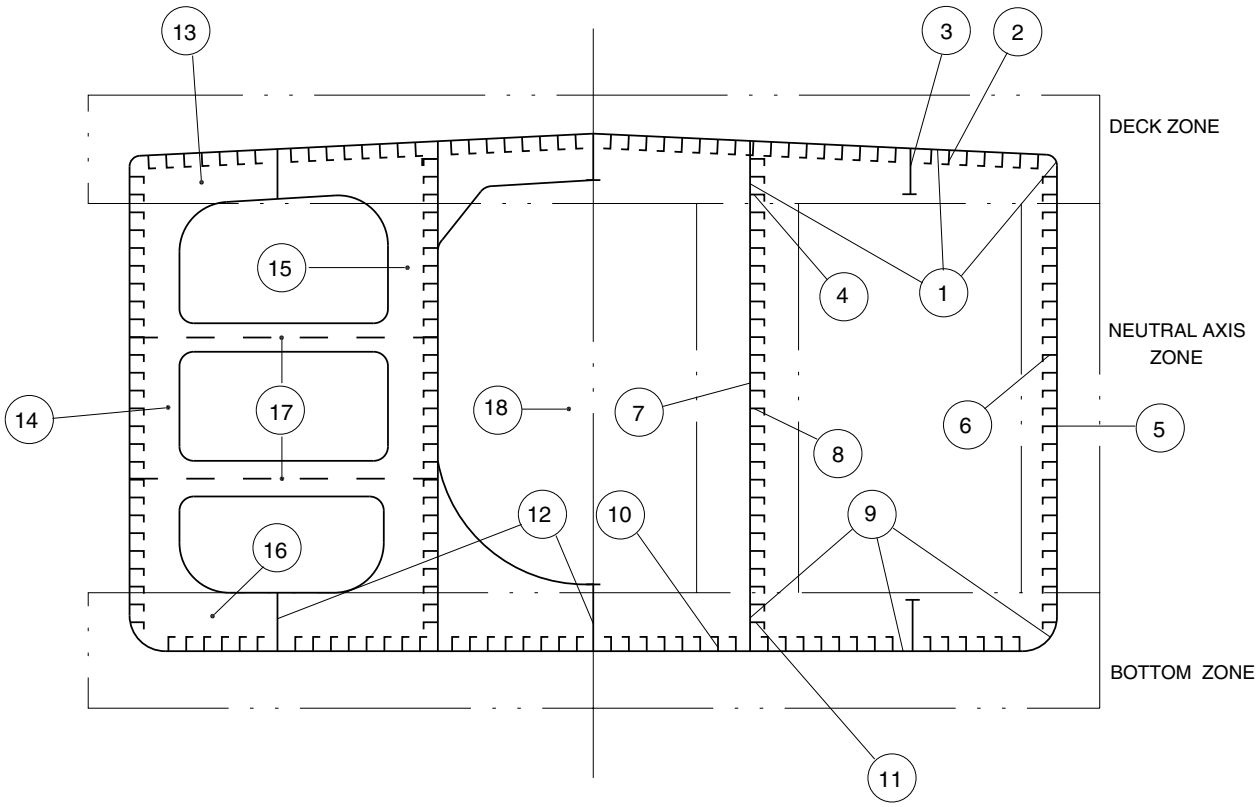

4.3.3 Each structural item to be assessed as illustrated in a typical transverse section (see Fig 16).

These structural items to be assessed are listed in Tab 3 and are grouped according to their position and contribution to the local or global strength of the unit.

4.3.4 The assessment of the thickness measurements is to be performed using the values given in the Tab 3 for each structural element with regard to the four criteria defined in [4.2.3], in the following order:

a) Assessment of isolated areas (column 1 in the table). If the criterion is not met, the wasted part of the item is to be dealt with as necessary.

b) Assessment of items (column 2 in the table). If the criterion is not met, the item is to be dealt with as necessary in the measured areas as far as the average condition of the item concerned is satisfactory. In cases where some items are renewed, the average thicknesses of these items to be considered in the next step are the new thicknesses.

c) Assessment of groups of items (column 3 in the table). If the criterion is not met, a sufficient number of elements are to be renewed in order to obtain an increased average thickness satisfying the considered criterion of the group (generally the elements to be renewed are those most wasted). As an example, for the assessment of the group "deck plates" all deck plates are measured and an average thickness of each of them is estimated. Then the average of all these values is to satisfy the criteria given for this group.

d) Assessment of zones (column 4 in the table). In principle, the criterion of the zone is met when all groups of items belonging to the zone meet their own criteria (see c) above). However, a greater diminution than those given in column 3 may be accepted for one group of items if, considering the other groups of items belonging to the same zone, the overall diminution of the zone does not exceed the criterion given for it in column 4.

   Example: The deck zone consists of two groups of items:

   - deck plating, which has an average diminution of 12% (criterion 10%)
   - deck longitudinals, which has an average diminution of 4% (criterion 10%).

   Even though the deck plating group exceeds its acceptance criterion, the average diminution of the zone, which can be very roughly estimated at 8%, is acceptable and thus the deck plating group can be accepted as it is.

Note 1: This criterion applicable to the zones is based on the general rule that the current hull girder section modulus is not to be less than 90% of the rule section modulus within 0,4L amidships. When the zone criterion is used, the assessment is made on the basis of the original modulus instead of the rule modulus. At the request of the Owner, a direct calculation using the ship's current thicknesses may be performed by the Society in order to accept greater diminutions than those given for this criterion.

4.3.5 These criteria take into consideration two main aspects:

- the overall strength of the hull girder
- the local strength and integrity of the hull structure, such as bulkheads, etc.

As a rule, they are applicable to the structure within the cargo area of surface units having a length greater than 90 metres. However, they may also be used for smaller surface units and for structure outside the cargo area according to the following principles excluding critical areas:

- for surface units having a length less than 90 metres, the percentages of acceptable wastage given in the tables can be increased by 5 (%) (e.g. 15% instead of 10%, etc.), except for those of deck and bottom zones
- for structure outside the cargo area, the same 5 (%) increase can be applied,

on the understanding, however, that both conditions cannot be applied at the same time.

Table 3 : Local and global acceptance criteria for surface unit (given in % of wastage)

Group of items**(1)**	Description of items	1 Isolated area	2 Item	3 Group	4 Zone
ITEMS CONTRIBUTING TO THE LONGITUDINAL STRENGTH (TRANSVERSE SECTION)					
	DECK ZONE **(2)**	–	–	–	10
1	Deck plating, deck stringer, sheer strake and longitudinal bulkhead upper strake **(3)**	25	20	10	–
2	Deck and sheer strake longitudinals web flange	– 25 20	– 20 15	10 – –	– – –
3	Deck longitudinal girders web flange	– 25 20	– 20 15	10 – –	– – –
4	Longitudinals connected to long. bulkhead upper strake **(3)** web flange	– 25 20	– 20 15	10 – –	– – –
	NEUTRAL AXIS ZONE **(2)**	–	–	–	15
5	Side shell plating **(3)**	25	20	15	–
6	Side shell longitudinals and stringers **(3)** web flange	– 25 20	– 20 15	15 – –	– – –
7	Longitudinal bulkhead plating	25	20	15	–
8	Longitudinal bulkhead longitudinals and stringers web flange	– 25 20	– 20 15	15 – –	– – –
	BOTTOM ZONE **(2)**	–	–	–	10
9	Bilge and bottom strakes, longitudinal bulkhead lower strake and keel plate **(3)**	25	20	10	–
10	Bilge and bottom longitudinals **(3)** web flange	– 25 20	– 20 15	10 – –	– – –
11	Longitudinals connected to longitud. bulkhead lower strake web flange	– 25 20	– 20 15	10 – –	– – –
12	Bottom girders web flange	– 25 20	– 20 15	10 – –	– – –
OTHER ITEMS					
13	Deck transverse web frame web flange brackets / stiffeners	 25 20 25	 20 15 20	 – – –	 – – –
14	Side shell web frame web flange brackets / stiffeners	 25 20 25	 20 15 20	 – – –	 – – –

Group of items(1)	Description of items	1 Isolated area	2 Item	3 Group	4 Zone
15	Longitudinal bulkhead web frame				
	web	25	20	–	–
	flange	20	15	–	–
	brackets / stiffeners	25	20	–	–
16	Bottom transverse web frame				
	web	25	20	–	–
	flange	20	15	–	–
	brackets / stiffeners	25	20	–	–
17	Cross tie				
	web	25	15	–	–
	flange	20	15	–	–
	brackets / stiffeners	20	15	–	–
18	Transverse bulkheads(4)				
	plating	25	20	15	–
	stringer web	25	20	–	–
	stringer flange	20	15	–	–
	stiffener web	30	20	–	–
	stiffener flange	25	15	–	–
19	Thruster casing(4)	–	–	10	–
	plating	25	20	–	–
	stringer web	25	20	–	–
	stringer flange	20	15	–	–
	stiffener web	30	20	–	–
	stiffener flange	25	15	–	–
20	Mooring foundation	–	–	10	–
	plating	25	20	–	–
	stringer web	25	20	–	–
	stringer flange	20	15	–	–
	stiffener web	30	20	–	–
	stiffener flange	25	15	–	–
21	Drill floor, moonpool, stool of derrick, derrick (if classed)	–	–	10	–
	plating	25	20	–	–
	stringer web	25	20	–	–
	stringer flange	20	15	–	–
	stiffener web	30	20	–	–
	stiffener flange	25	15	–	–
	derrick beam web	20	15		
	derrick beam flange	20	15		

(1) Items are shown in the Fig 16. Some items are not called for clarity of drawings.
(2) Each zone is to be evaluated separately.
(3) For double hull, the structural elements of the inner skin (plating, longitudinals, girders, bulkheads) are to be included in the corresponding elements of the outer skin.
(4) Including swash bulkheads, forward and aft peak bulkheads.

4.4 Yield criteria for column stabilized units and TLP

4.4.1 Local and global strength criteria in the present Article are applicable to column stabilized and TLP units.

These criteria may also be used for other unit types taking into consideration the equivalence or similarity of structural elements and their contribution to local and/or global strength.

4.4.2 For the evaluation of the unit global strength, it is a prerequisite that welding between external shell and internal member is maintained effective so as to keep continuity of hull structures.

4.4.3 Structural items to be assessed include: columns, diagonal and horizontal braces together with any other parts of the upper hull supporting structure as accessible above the waterline as shown in Fig 17, Fig 18 and Fig 19.

Figure 17 : Profile view of pontoon type column-stabilized unit

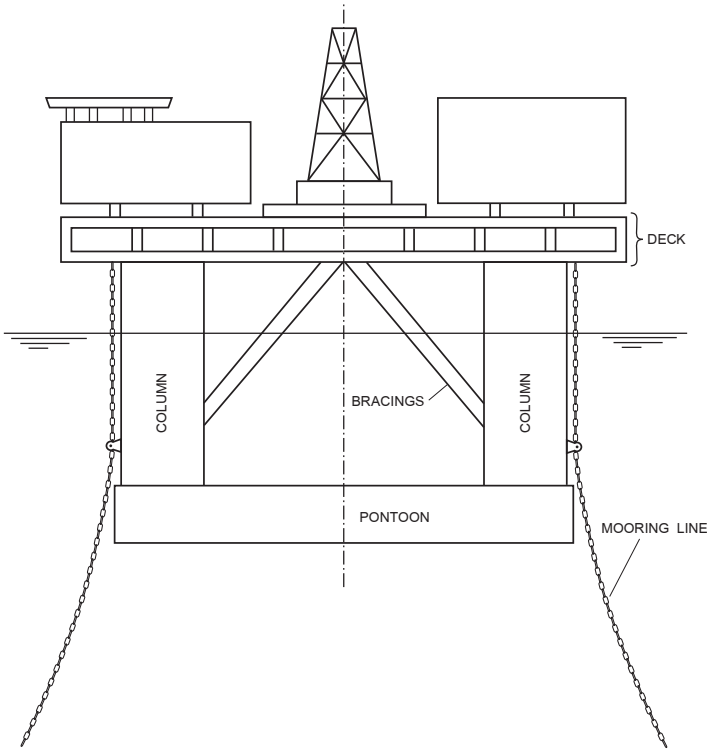

Figure 18 : Transverse view of pontoon type column-stabilized unit

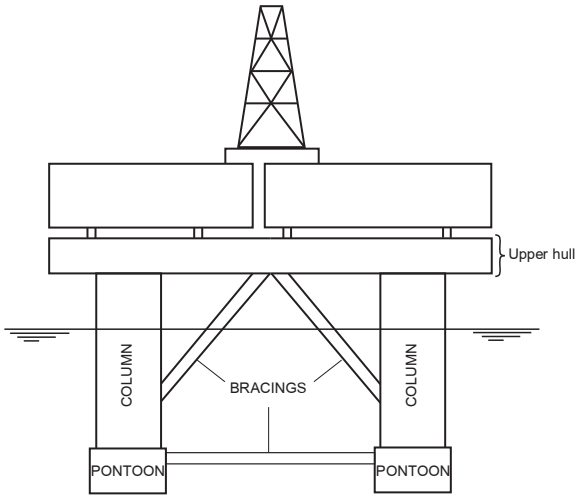

Figure 19 : Profile and transverse view of a ring type column-stabilized or TLP unit with truss upper hull

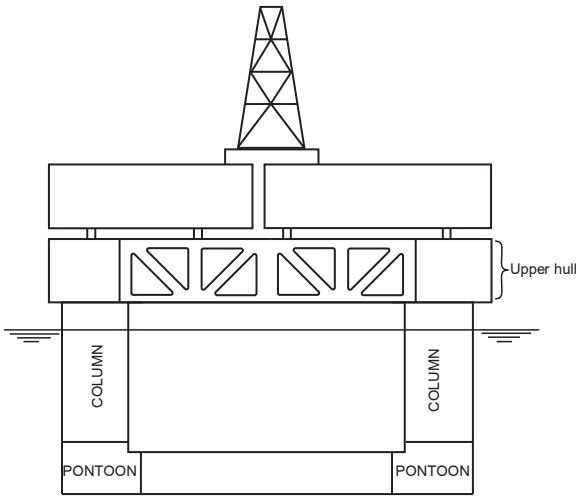

4.4.4 The structural items to be assessed are listed in Tab 4 to Tab 8 and grouped according to their position and contribution to the local and/or global strength of the unit.

- For twin pontoons type column-stabilized unit refer to Tab 4, Tab 5 and Tab 8
- For ring pontoon type of column-stabilized unit and for TLP refer to Tab 4, Tab 5, Tab 6 and Tab 7 or Tab 8 depending on the upper hull type

The following structural items to be assessed are illustrated in Fig 20:

- pontoon
- column
- node.

Figure 20 : Layout of pontoon section for TLP

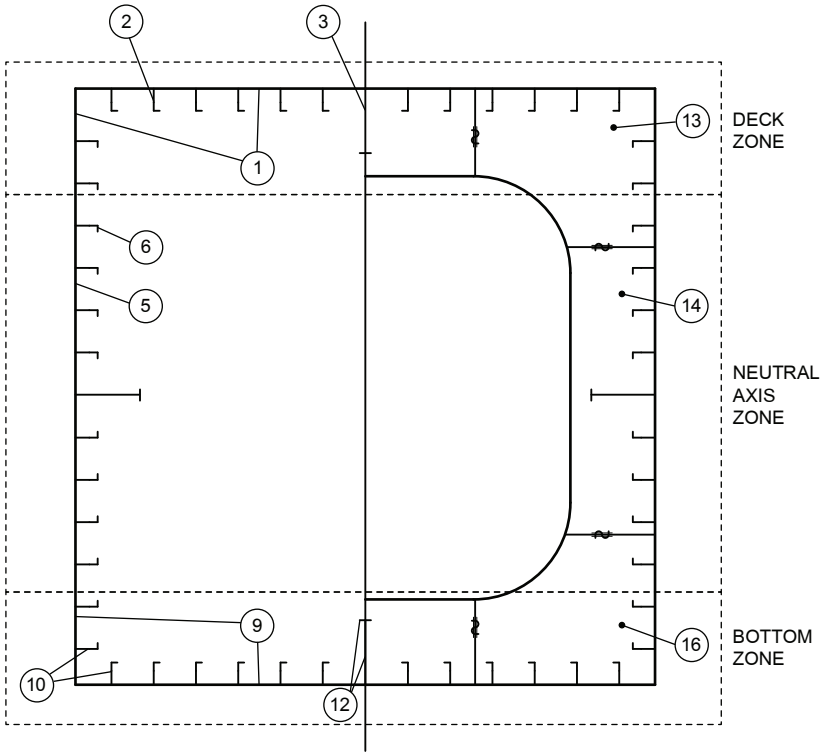

Figure 21 : Layout of pontoon section for column stabilized unit

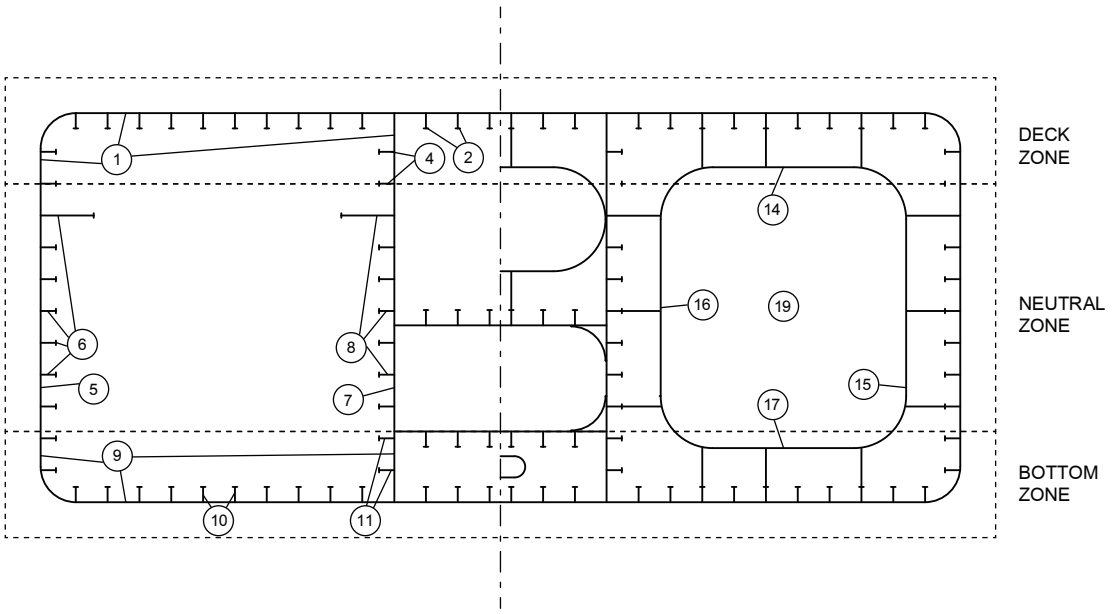

4.4.5 The assessment of the thickness measurements is to be performed using the values given in the Tab 4 for each structural element with regard to the four criteria defined in [4.2.3], in the following order:

a) Assessment of isolated areas (column 1 in the table). If the criterion is not met, the wasted part of the item is to be dealt with as necessary.

b) Assessment of items (column 2 in the table). If the criterion is not met, the item is to be dealt with as necessary in the measured areas as far as the average condition of the item concerned is satisfactory. In cases where some items are renewed, the average thicknesses of these items to be considered in the next step are the new thicknesses.

c) Assessment of groups of items (column 3 in the table). If the criterion is not met, a sufficient number of elements are to be renewed in order to obtain an increased average thickness satisfying the considered criterion of the group (generally the elements to be renewed are those most wasted). As an example, for the assessment of the group "deck plates" all deck plates are measured and an average thickness of each of them is estimated. Then the average of all these values is to satisfy the criteria given for this group.

d) Assessment of zones (column 4 in the table), for pontoun only. In principle, the criterion of the zone is met when all groups of items belonging to the zone meet their own criteria (see c) above). However, a greater diminution than those given in column 3 may be accepted for one group of items if, considering the other groups of items belonging to the same zone, the overall diminution of the zone does not exceed the criterion given for it in column 4.

Example: The deck zone consists of two groups of items:

- deck plating, which has an average diminution of 12% (criterion 10%)
- deck longitudinals, which has an average diminution of 4% (criterion 10%).

Even though the deck plating group exceeds its acceptance criterion, the average diminution of the zone, which can be very roughly estimated at 8%, is acceptable and thus the deck plating group can be accepted as it is excluding critical areas.

4.4.6 These criteria take into consideration two main aspects:

- the overall strength of the hull
- the local strength and integrity of the hull structure, such as bulkheads, watertigth area, etc.

Table 4 : Pontoon section local and global acceptance criteria for column stabilized unit and TLP (given in % of wastage)

Group of items	Description of items	1 Isolated area	2 Item	3 Group	4 Zone
ITEMS CONTRIBUTING TO THE GLOBAL STRENGTH (TRANSVERSE SECTION)					
	TOP ZONE **(1)**	–	–	–	10
1	Deck plating, deck stringer, sheer strake and longitudinal bulkhead upper strake	25	20	10	–
2	Deck and sheer strake longitudinals web flange	– 25 20	– 20 15	10 – –	– – –
3	Deck longitudinal girders web flange	– 25 20	– 20 15	10 – –	– – –
4	Longitudinals connected to long. bulkhead upper strake web flange	– 25 20	– 20 15	10 – –	– – –
	NEUTRAL AXIS ZONE **(1)**	–	–	–	15
5	Side shell plating	20	15	–	–
6	Side shell longitudinals and stringers web flange	– 25 20	– 20 15	15 – –	– – –
7	Longitudinal bulkhead plating	20	15	–	–
8	Longitudinal bulkhead longitudinals and stringers web flange	– 25 20	– 20 15	15 – –	– – –
	BOTTOM ZONE **(1)**	–	–	–	10
9	Bilge and bottom strakes, longitudinal bulkhead lower strake and keel plate **(2)**	25	20	10	–

Group of items	Description of items	1 Isolated area	2 Item	3 Group	4 Zone
10	Bilge and bottom longitudinals **(2)** web flange	– 25 20	– 20 15	10 – –	– – –
11	Longitudinals connected to longitud. bulkhead lower strake web flange	– 25 20	– 20 15	10 – –	– – –
12	Bottom girders web flange	– 25 20	– 20 15	10 – –	– – –
	BRACING **(1)**	–	–	–	10
13	plate web flange tube	20 25 20 20	15 20 15 15	– – – –	– – – –
	OTHER ITEMS				
14	Deck transverse web frame web flange brackets / stiffeners	 25 20 25	 20 15 20	 – – –	 – – –
15	Side shell web frame web flange brackets / stiffeners	 25 20 25	 20 15 20	 – – –	 – – –
16	Longitudinal bulkhead web frame web flange brackets / stiffeners	 25 20 25	 20 15 20	 – – –	 – – –
17	Bottom transverse web frame web flange brackets / stiffeners	 25 20 25	 20 15 20	 – – –	 – – –
18	Cross tie web flange brackets / stiffeners	 25 20 20	 15 15 15	 – – –	 – – –
19	Transverse bulkheads plating stringer web stringer flange stiffener web stiffener flange	 25 25 20 30 25	 20 20 15 20 15	 15 – – – –	 – – – – –
20	Internal reinforcement for outfitting (riser, caisson, tug and pusher point, towing outfitting...) plating stringer web stringer flange stiffener web stiffener flange manhole coaming	– – 20 30 20 30 20 20	– – 15 20 15 20 15 15	10 – – – – – – –	– – – – – – – –

(1) Each zone is to be evaluated separately.

(2) For double bottom, the structural elements of the inner bottom (plating, longitudinals, girders, bulkheads) are to be included in the corresponding elements of the bottom.

Table 5 : Column section local and global acceptance criteria for column stabilized unit and TLP (given in % of wastage)

Group of items	Description of items	1 Isolated area	2 Item	3 Group	4 Zone
1	Deck/platform plating	25	20	15	–
2	Deck/platform stiffeners web flange	– 25 20	– 20 15	15 – –	– – –
3	Deck/platform web frame web flange brackets / stiffeners	 25 20 25	 20 15 20	15 – – –	 – – –
4	Side shell plating	25	20	10	–
5	Side shell vertical/horizontal stiffener web flange	– 25 20	– 20 15	10 – –	– – –
6	Side shell web frame web flange brackets / stiffeners	 25 20 25	 20 15 20	10 – – –	 – – –
7	vertical bulkhead plating	25	20	10	–
8	Bulkhead stiffeners web flange	– 25 20	– 20 15	15 – –	– – –
9	Bulkhead web frame web flange brackets / stiffeners	 25 20 25	 20 15 20	 – – –	 – – –
10	Cross tie web flange brackets / stiffeners	 25 20 20	 15 15 15	 – – –	 – – –
	BRACING**(1)**	–	–	–	10
12	plate web flange tube	20 25 20 20	15 20 15 15	– – – –	– – – –
(1) Each zone is to be evaluated separately.					

Table 6 : Node section local and global acceptance criteria for ring type column stabilized unit and TLP (given in % of wastage)

Group of items	Description of items	1 Isolated area	2 Item	3 Group	4 Zone
	DECK ZONE **(1)**	–	–	–	10
1	Deck plating, deck stringer, sheer strake and longitudinal bulkhead upper strake	25	20	10	–
2	Deck and sheer strake longitudinals web flange	– 25 20	– 20 15	10 – –	– – –
3	Deck longitudinal girders web flange	– 25 20	– 20 15	10 – –	– – –

Group of items	Description of items	1 Isolated area	2 Item	3 Group	4 Zone
4	Longitudinals connected to long. bulkhead upper strake web flange	– 25 20	– 20 15	10 – –	– – –
	SIDE SHELL ZONE **(1)**	–	–	–	15
5	Side shell plating	25	20	15	–
6	Side shell longitudinals and stringers web flange	– 25 20	– 20 15	15 – –	– – –
7	Longitudinal bulkhead plating	25	20	15	–
8	Longitudinal bulkhead longitudinals and stringers web flange	– 25 20	– 20 15	15 – –	– – –
	BOTTOM ZONE **(1)**	–	–	–	10
9	Bilge and bottom strakes, longitudinal bulkhead lower strake and keel plate	25	20	10	–
10	Bilge and bottom longitudinals web flange	– 25 20	– 20 15	10 – –	– – –
11	Longitudinals connected to longitud. bulkhead lower strake web flange	– 25 20	– 20 15	10 – –	– – –
12	Bottom girders web flange	– 25 20	– 20 15	10 – –	– – –
	OTHER ITEMS				
13	Deck transverse web frame web flange brackets / stiffeners	 25 20 25	 20 15 20	 – – –	 – – –
14	Side shell web frame web flange brackets / stiffeners	 25 20 25	 20 15 20	 – – –	 – – –
15	Longitudinal bulkhead web frame web flange brackets / stiffeners	 25 20 25	 20 15 20	 – – –	 – – –
16	Bottom transverse web frame web flange brackets / stiffeners	 25 20 25	 20 15 20	 – – –	 – – –
17	Cross tie web flange brackets / stiffeners	 25 20 20	 15 15 15	 – – –	 – – –
18	Transverse bulkheads plating stringer web stringer flange stiffener web stiffener flange	 25 25 20 30 25	 20 20 15 20 15	 15 – – – –	 – – – – –

Group of items	Description of items	1 Isolated area	2 Item	3 Group	4 Zone
19	Thruster casing plating stringer web stringer flange stiffener web stiffener flange	– 25 25 20 30 25	– 20 20 15 20 15	10 – – – – –	– – – – – –
20	Mooring foundation or tendon foundation plating stringer web stringer flange stiffener web stiffener flange casting	– 25 25 20 30 25 20	– 20 20 15 20 15 15	10 – – – – – –	– – – – – – –
(1) Each zone is to be evaluated separately.					

Table 7 : Upper Hull section for truss structure local and global acceptance criteria for column stabilized unit and TLP (given in % of wastage)

Group of items	Description of items	1 Isolated area	2 Item	3 Group	4 Zone
ITEMS CONTRIBUTING TO THE LONGITUDINAL STRENGTH (TRANSVERSE SECTION)					
	all DECK level**(1)**	–	–	–	15
1	Deck plating, deck stringer, sheer strake and longitudinal bulkhead upper strake **(2)**	25	20	15	–
2	Deck and sheer strake vertical web flange	– 25 20	– 20 15	10 – –	– – –
3	Deck longitudinal girders web flange	– 25 20	– 20 15	10 – –	– – –
4	Longitudinals connected to long. bulkhead upper strake **(2)** web flange	– 25 20	– 20 15	10 – –	– – –
5	Box girder, brace or girder part of the main structure primary web flange tubular plating	– 20 20 20 20	– 15 15 15 15	10 – – – –	– – – – –
	NEUTRAL AXIS ZONE **(1)**	–	–	–	15
6	Side shell plating **(2)**	25	20	15	–
7	Side shell longitudinals and stringers **(2)** web flange	– 25 20	– 20 15	15 – –	– – –
8	Longitudinal bulkhead plating	25	20	15	–
9	Longitudinal bulkhead longitudinals and stringers web flange	– 25 20	– 20 15	15 – –	– – –
10	Box girder, brace or girder part of the main structure primary web flange tubular plating	– 20 20 20 20	– 15 15 15 15	10 – – – –	– – – – –
	BOTTOM ZONE **(1)**	–	–	–	10

Group of items	Description of items	1 Isolated area	2 Item	3 Group	4 Zone
11	Bilge and bottom strakes, longitudinal bulkhead lower strake and keel plate **(2)**	25	20	10	–
12	Bilge and bottom longitudinals **(2)** web flange	– 25 20	– 20 15	10 – –	– – –
13	Longitudinals connected to longitud. bulkhead lower strake web flange	– 25 20	– 20 15	10 – –	– – –
14	Bottom girders web flange	– 25 20	– 20 15	10 – –	– – –
15	Box girder, brace or girder part of the main structure primary web flange tubular plating	– 20 20 20 20	– 15 15 15 15	10 – – – –	– – – – –
OTHER ITEMS					
16	blast wall	20	15	–	–
17	Deck transverse web frame web flange brackets / stiffeners	 25 20 25	 20 15 20	 – – –	 – – –
18	Side shell web frame web flange brackets / stiffeners	 25 20 25	 20 15 20	 – – –	 – – –
19	Longitudinal bulkhead web frame web flange brackets / stiffeners	 25 20 25	 20 15 20	 – – –	 – – –
20	Bottom transverse web frame web flange brackets / stiffeners	 25 20 25	 20 15 20	 – – –	 – – –
21	Cross tie web flange brackets / stiffeners	 25 20 20	 15 15 15	 – – –	 – – –
22	Transverse bulkheads**(3)** plating stringer web stringer flange stiffener web stiffener flange	 25 25 20 30 25	 20 20 15 20 15	 15 – – – –	 – – – – –
23	Main equipment support: plating stringer web stringer flange stiffener web stiffener flange	– 20 20 20 35 20	– 15 15 15 20 15	15 – – – – –	– – – – – –

(1) Each zone is to be evaluated separately.

(2) For double hull oil tankers, the structural elements of the inner skin (plating, longitudinals, girders, bulkheads) are to be included in the corresponding elements of the outer skin.

(3) Including swash bulkheads, forward and aft peak bulkheads.

Table 8 : Upper Hull section for deck box local and global acceptance criteria for column stabilized unit and TLP structure (given in % of wastage)

Group of items	Description of items	1 Isolated area	2 Item	3 Group	4 Zone
	ITEMS CONTRIBUTING TO THE GLOBAL STRENGTH				
	TOP ZONE **(1)**	–	–	–	10
1	Deck plating, deck stringer, sheer strake and longitudinal bulkhead upper strake **(2)**	25	20	10	–
2	Deck and sheer strake longitudinals web flange	– 25 20	– 20 15	10 – –	– – –
3	Deck longitudinal girders web flange	– 25 20	– 20 15	10 – –	– – –
4	Longitudinals connected to long. bulkhead upper strake **(2)** web flange	– 25 20	– 20 15	10 – –	– – –
	NEUTRAL AXIS ZONE **(1)**	–	–	–	15
5	Side shell plating **(2)**	25	20	15	–
6	Side shell longitudinals and stringers **(2)** web flange	– 25 20	– 20 15	15 – –	– – –
7	Longitudinal bulkhead plating	25	20	15	–
8	Longitudinal bulkhead longitudinals and stringers web flange	– 25 20	– 20 15	15 – –	– – –
	BOTTOM ZONE **(1)**	–	–	–	10
9	Bilge and bottom strakes, longitudinal bulkhead lower strake and keel plate **(2)**	25	20	10	–
10	Bilge and bottom longitudinals **(2)** web flange	– 25 20	– 20 15	10 – –	– – –
11	Longitudinals connected to longitud. bulkhead lower strake web flange	– 25 20	– 20 15	10 – –	– – –
12	Bottom girders web flange	– 25 20	– 20 15	10 – –	– – –
	OTHER ITEMS				
13	Deck transverse web frame: web flange brackets / stiffeners	 25 20 25	 20 15 20	 – – –	 – – –
14	Side shell web frame: web flange brackets / stiffeners	 25 20 25	 20 15 20	 – – –	 – – –
15	Longitudinal bulkhead web frame: web flange brackets / stiffeners	 25 20 25	 20 15 20	 – – –	 – – –

Group of items	Description of items	1 Isolated area	2 Item	3 Group	4 Zone
16	Bottom transverse web frame:				
	web	25	20	–	–
	flange	20	15	–	–
	brackets / stiffeners	25	20	–	–
17	Cross tie:				
	web	25	15	–	–
	flange	20	15	–	–
	brackets / stiffeners	20	15	–	–
18	Transverse bulkheads: **(3)**				
	plating	25	20	15	–
	stringer web	25	20	–	–
	stringer flange	20	15	–	–
	stiffener web	30	20	–	–
	stiffener flange	25	15	–	–
19	other decks: **(3)**				
	plating	25	20	15	–
	stringer web	25	20	–	–
	stringer flange	20	15	–	–
	stiffener web	30	20	–	–
	stiffener flange	25	15	–	–

(1) Each zone is to be evaluated separately.
(2) For double hull oil tankers, the structural elements of the inner skin (plating, longitudinals, girders, bulkheads) are to be included in the corresponding elements of the outer skin.
(3) Including swash bulkheads, forward and aft peak bulkheads.

4.5 Yield criteria for self-elevating units

4.5.1 Local and global strength criteria in the present Article are applicable to self-elevating units.

4.5.2 The structure of the pontoon of self-elevating units is to be assessed as applicable for the hull of surface unit in [4.3]

4.5.3 The structural items specific to self-elevating units are listed in Tab 9.

4.5.4 The assessment of the thickness measurements is to be performed using the values given in the Tab 9 for each structural element with regard to the four criteria defined in [4.2.3], in the following order:

a) assessment of isolated areas (column 1 in the table). If the criterion is not met, the wasted part of the item is to be dealt with as necessary.

b) assessment of items (column 2 in the table). If the criterion is not met, the item is to be dealt with as necessary in the measured areas as far as the average condition of the item concerned is satisfactory. In cases where some items are renewed, the average thicknesses of these items to be considered in the next step are the new thicknesses.

c) assessment of groups of items (column 3 in the table). If the criterion is not met, a sufficient number of elements are to be renewed in order to obtain an increased average thickness satisfying the considered criterion of the group (generally the elements to be renewed are those most wasted). As an example, for the assessment of the group “deck plates” all deck plates are measured and an average thickness of each of them is estimated. Then the average of all these values is to satisfy the criteria given for this group.

d) assessment of zones (column 4 in the table). In principle, the criterion of the zone is met when all groups of items belonging to the zone meet their own criteria (see c) above). However, a greater diminution than those given in column 3 may be accepted for one group of items if, considering the other groups of items belonging to the same zone, the overall diminution of the zone does not exceed the criterion given for it in column 4.

   Example: The deck zone consists of two groups of items:

   - deck plating, which has an average diminution of 12% (criterion 10%)
   - deck longitudinals, which has an average diminution of 4% (criterion 10%).

   Even though the deck plating group exceeds its acceptance criterion, the average diminution of the zone, which can be very roughly estimated at 8%, is acceptable and thus the deck plating group can be accepted as it is excluding critical areas.

Note 1: This criterion applicable to the zones is based on the general rule that the current hull girder section modulus is not to be less than 90% of the rule section modulus within 0,4L amidships. When the zone criterion is used, the assessment is made on the basis of the original modulus instead of the rule modulus. At the request of the Owner, a direct calculation using the unit's current thicknesses may be performed by the Society in order to accept greater diminutions than those given for this criterion.

4.5.5 These criteria take into consideration two main aspects:

- the overall strength of the hull
- the local strength and integrity of the hull structure, such as bulkheads, etc.

Table 9 : Local and global acceptance criteria for self-elevating unit (given in % of wastage)

Group of items(**1**)	Description of items	1 Isolated area	2 Item	3 Group	4 Zone
STRUCTURAL ITEMS OF THE PONTOUN					
As applicable for hull of surface unit, see Tab 3.					
OTHER ITEMS					
19	leg foundation: plating stringer web stringer flange stiffener web stiffener flange	– 25 25 20 30 25	– 20 20 15 20 15	10 – – – – –	– – – – – –
20	leg: plating column bracing	– 20 20 20	– 15 15 15	10 – – –	– – – –
21	spud can: plating stringer web stringer flange stiffener web stiffener flange	– 20 30 25 30 20	– 15 25 20 25 15	10 – – – – –	– – – – – –
(1) As applicable to surface unit, see Tab 3					

4.6 Yield criteria for critical area

4.6.1 The assessment of the thickness measurements is to be performed using the values given in the Tab 10 for each structural element with regard to the four criteria defined in [4.2.3], in the following order:

a) assessment of isolated areas (column 1 in the table). If the criterion is not met, the wasted part of the item is to be dealt with as necessary.

b) assessment of items (column 2 in the table). If the criterion is not met, the item is to be dealt with as necessary in the measured areas as far as the average condition of the item concerned is satisfactory. In cases where some items are renewed, the average thicknesses of these items to be considered in the next step are the new thicknesses.

Table 10 : Local and global acceptance for critical area (given in % of wastage)

Group of items	Description of items	1 Isolated area	2 Item	3 Group	4 Zone
ALL ITEMS					
1	plating stringer web stringer flange stiffener web stiffener flange tubular box girder	10 10 10 10 10 10 10	5 5 5 5 5 5 5	– – – – – – –	– – – – – – –

4.7 Buckling strength criterion

4.7.1 These criteria are applicable to surface units having a length greater than 120 metres. For other unit type those criteria shall be applied.

The structural items contributing to the global strength of the unit, such as deck and bottom plating, deck and bottom girders, etc., are to be assessed with regard to their buckling strength, as deemed necessary by the Surveyor. In such a case, buckling strenght criteria given in Tab 11 are not to be exceeded.

Note 1: The minimum thickness will be specially considered for units built with excess hull girder section modulus.

Note 2: The surveyor in case of local deformation shall request re-analysis of the section property with actual thickness measurement.

Table 11 : Buckling strength criterion

ITEMS		RATIO	MATERIAL (R_{eH})		
			235	315	355 and 390
Bottom and deck plates		s / t	56,0	51,0	49,0
Longitudinals	flat bar web	h_w / t_w	20,0	18,0	17,5
Flanged longitudinals / girders	web	h_w / t_w	56,0	51,0	49,0
	symmetrical flange	b_f / t_f	34,0	30,0	29,0
	asymmetrical flange	b_f / t_f	17,0	15,0	14,5

Symbols:
R_{eH} : minimum yield stress of the material, in N/mm²; s : longitudinal spacing, in mm; t : actual plate thickness, in mm;
h_w : web height, in mm; t_w : web thickness, in mm; b_f : flange breadth, in mm; t_f : flange thickness, in mm;

4.8 Pitting

4.8.1 The maximum acceptable depth for isolated pits is 35% of the as-built thickness.

4.8.2 For areas with different pitting intensity, the intensity diagrams shown in Fig 22 are to be used to identify the percentage of affected areas.

For areas having a pitting intensity of 50% or more, the maximum average depth of pits is 20% of the as-built thickness. For intermediate values between isolated pits and 50% of affected area, the interpolation between 35% and 20% is made according to Tab 12.

4.8.3 In addition, the thickness outside the pits in the area considered is to be assessed according to [4.3] to [4.7].

Note 1: Application of filler material (plastic or epoxy compounds) is recommended as a means to stop or reduce the corrosion process, but it is not considered an acceptable repair for pitting exceeding the maximum allowable wastage limits. Welding repairs may be accepted when performed in accordance with procedures agreed with the society.

Table 12 : Pitting intensity and corresponding maximum average depth of pitting

PITTING INTENSITY (%)	MAXIMUM AVERAGE PITTING DEPTH (% of the as-built thickness)
Isolated	35,0
5	33,5
10	32,0
15	30,5
20	29,0
25	27,5
30	26,0
40	23,0
50	20,0

Figure 22 : Pitting intensity diagrams (from 1% to 50% intensity)

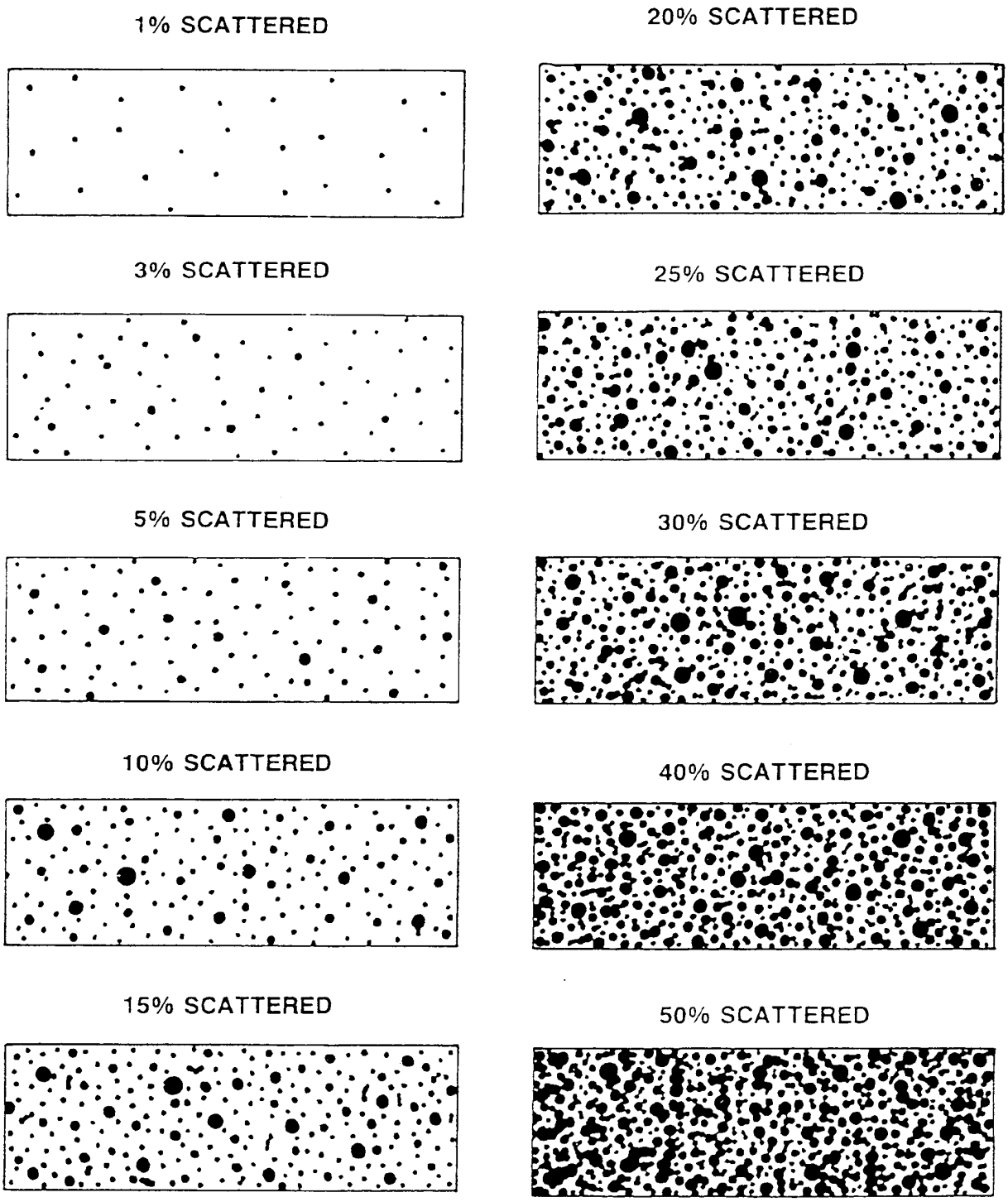

NR445

RULES FOR THE CLASSIFICATION OF OFFSHORE UNITS

Part B
Structural Safety

January 2024

Table of Content

Chapter 1 Stability and Subdivision

Table of Content

Chapter 3 Structure

Section 1 General

Section 2 Structural Steels

Table of Content

Table of Content

Table of Content

Section 9 Local Structural Improvements

Part B
Structural Safety

CHAPTER 1
STABILITY AND SUBDIVISION

Section 1 General

1 Classification requirements

1.1 General

1.1.1 Unit stability and watertight integrity are to comply with the applicable requirements of the present Chapter, or, subject to a preliminary agreement, in accordance with other particular specifications based on the same principles or relevant National or International Regulations.

1.2 Damage stability

1.2.1 Except otherwise required by National Authorities, damage stability requirements are applicable only to the following units:

- units intended to receive service notations **drilling** (completed or not by an indication between brackets), **drilling assistance**, **accommodation**, **oil storage**, **liquefied gas storage**, **oil production unit**, **gas production unit** and **gas liquefaction unit**
- units intended to receive more than 100 persons on board.

In other cases, damage stability requirements of the present Chapter may be used as a guidance.

2 Statutory requirements

2.1 International Regulations

2.1.1 Attention is directed to the International Regulations the unit may have to comply with such as IMO Code for the Construction and Equipment of Mobile Offshore Drilling Units (MODU code), in particular for drilling units.

2.2 National Authorities requirements

2.2.1 Attention is drawn to special legal provisions enacted by National Authorities which units may have to comply with according to their flag, structural type, size, operational site and intended service, as well as other particulars and details.

2.3 Classification and statutory requirements

2.3.1 Compliance with statutory requirements mentioned in Article [2] is not included in classification scope but, in case of conflict between the Rules and these requirements, the latter ones are to take precedence over the requirements of the present Rules.

The Society may take into consideration particulars which may be called for or authorised by the competent National Authorities.

2.4 Operating procedures

2.4.1 Adequate instructions and information related to the stability, watertight integrity and weathertight integrity of the unit are to be provided by the Owner and included in the Operating Manual.

Note 1: The procedures and operating instructions do not fall within the scope of classification and need not to be approved by the Society.

2.5 Specific criteria

2.5.1 If the party applying for classification specifies criteria for intact and damage stability, these criteria are to be taken into account in addition to the criteria in the present Section and stated in the Design Criteria Statement.

3 Inclining test and lightweight survey

3.1 Definitions

3.1.1 Lightweight

The lightweight condition means that the unit is complete in all respects, but without consumables, stores, cargo, crew and their effects, and without any liquids on board except for machinery and piping fluids, such as lubricants and hydraulics, which are at operating levels.

The weight of mediums on board for the fixed fire-fighting systems (e.g. freshwater, CO_2, dry chemical powder, foam concentrate, etc.) are to be included in the lightweight.

3.1.2 Inclining test

The inclining test is a procedure which involves moving a series of known weights, normally in the transverse direction, and then measuring the resulting change in the equilibrium heel angle of the unit. By using this information and applying basic naval architecture principles, the ship's vertical centre of gravity (VCG or KG) is determined.

3.1.3 Lightweight survey

The lightweight survey is a procedure which involves auditing all items which are to be added, deducted or relocated on the unit at the time of the inclining test so that the observed condition of the unit can be adjusted to the lightweight condition. The weight and longitudinal, transverse and vertical location of each item are to be accurately determined and recorded. The lightweight displacement and longitudinal centre of gravity (LCG) can be obtained using this information, as well as the static waterline of the ship at the time of the inclining test as determined by measuring the freeboard or verified draught marks of the unit, the unit's hydrostatic data and the sea water density.

The transverse centre of gravity (TCG) may also be determined for units which are asymmetrical about the centreline or whose internal arrangement or outfitting is such that an inherent list may develop from off-centre mass.

3.2 Lightweight survey

3.2.1 A lightweight survey is to be carried out on each unit at the time of construction or after substantial modifications in the lightweight condition.

3.2.2 For all the units, a lightweight survey is to be conducted at each class renewal survey.

If the first class renewal survey demonstrates that an effective weight control program is maintained with an up-to-date light ship data log and it is confirmed by the records at the first class renewal survey, then light ship displacement may be verified in operation by comparison of the calculated and observed draught.

Where the difference between the expected displacement and the actual displacement based upon draught readings exceed 1% of operating displacement, a lightweight survey is to be conducted in the lightweight condition.

Alternative for permanent units are given in [3.7].

3.3 Inclining test

3.3.1 An inclining test is to be carried out on each unit at the time of construction or after substantial modifications in order to determine accurately the lightweight data (weight and position of centre of gravity).

Alternative for units of same design are given in [3.5].

3.3.2 An inclining test is also to be carried out in the following cases:

- where the lightweight survey indicates a change from the calculated lightweight displacement in excess of 1% of the displacement in working condition, or
- where the lightweight survey indicates a change from the longitudinal position of the unit centre of gravity in excess of 1% of the unit's principal horizontal dimension.

Alternative for column-stabilized units and permanents units are given respectively in [3.6] and [3.7].

3.3.3 The inclining test is to take place, when the unit is as near as possible to completion, in the presence and to the satisfaction of the attending Surveyor. The test procedure is to be submitted to the Society for examination prior to being carried out.

3.3.4 The results of the inclining test are to be submitted to the Society for review.

3.3.5 A detailed procedure for conducting an inclining test is given in Ship Rules, Pt B, Ch 3, App 1.

3.4 Operating Manual

3.4.1 The results of the lightweight survey and inclining test, or lightweight survey adjusted for weight differences when [3.5.1] is applicable, are to be indicated in the Operating Manual.

The lightweight particulars are to include the detailed list of the equipment (cranes, accommodation, features...) located on the unit when the test has been carried out.

3.4.2 A record of all changes to machinery, structure, outfitting and equipment that affect the lightweight data, is to be maintained in the Operating Manual or a in a light-weight data alteration log.

3.5 Units of same design

3.5.1 For successive units of a design or for units undergoing only minor alterations, the Society may, at its discretion, waive the requirements of [3.3] and accept the light ship data of the first unit of the series in lieu of an inclining test, provided that, notwithstanding minor differences in machinery, outfitting or equipment, both following conditions are fulfilled:

- the lightweight survey indicates a change from the lightweight displacement calculated for the first of the series less than 1% of the displacement in working condition, and
- this survey indicates a change from the horizontal position of the unit centre of gravity as determined for the first of the series less than 1% of the unit's principal horizontal dimensions.

3.5.2 For the application of [3.5.1], the party applying for classification is required to submit detailed calculations showing the differences of weights and centres of gravity. An extra care is to be given in the case of a series of column stabilized units as these, even though identical by design, are recognised as being unlikely to attain an acceptable similarity of weight or centre of gravity to warrant a waiver of the inclining test.

3.6 Alternative for column stabilized units

3.6.1 Inclining test at renewal survey

If a lightweight survey indicates a change from calculated lightweight displacement in excess of 1% of the operating displacement, an inclining test is to be conducted. As an alternative, the Society may accept that the difference in weight are placed in an indisputably conservative vertical centre of gravity.

3.7 Alternative for permanent units

3.7.1 Lightweight survey at renewal survey

When the renewal survey occurs while the permanent unit is in operation at sea, and subject to Society approval, the draughts reading may be disregarded provided a record of all changes to machinery, structure, outfitting and equipment that affect the light ship data is maintained in a light-weight data alteration log.

3.7.2 Inclining test at renewal survey

If a lightweight survey indicates a change from calculated lightweight displacement in excess of 1% of the operating displacement, an inclining test is to be conducted. As an alternative, the Society may accept that the difference in weight is placed in an indisputably conservative vertical centre of gravity.

4 Load line mark

4.1 General

4.1.1 Mobile units for which the compliance with ILLC or MODU Code is not required, are to have a load line mark which designate the maximum permissible draught when the unit is in the afloat condition. Such markings are to be placed at suitable visible locations on the structure, to the satisfaction of the Society.

4.1.2 For units mentioned in [4.1.1] the position of the load line mark is to be established based on the specific requirements given in MODU Code, Ch 3, [3.7].

5 Loading instrument

5.1

5.1.1 The use of a loading instrument is not a class requirement except when stated otherwise by the rules.

However, in case a loading instrument is present on board, it is to be approved by the Society.

6 Lifting units

6.1 General

6.1.1 Unless otherwise specified, units assigned with the service notation **lifting** are to comply with the applicable stability requirements defined in Ship Rules, Pt E, Ch 8, Sec 3.

6.1.2 For units assigned with the structural type notation **column stabilized unit**, the stability criteria set forth in Ship Rules, Pt E, Ch 8, Sec 3, [2.2.1] item b), for lifting operations conducted under environmental and operational limitations, is replaced by:

$A_{RL} \geq 1{,}30\ A_{HL}$

with the lifted load at the most unfavourable position and the wind heeling moment curve defined by direct calculation of the windage area for a sufficient number of heel angles.

Section 2 Stability Calculations

1 General

1.1 Cases for stability calculations

1.1.1 Stability calculations are to be carried out and submitted to the Society for review for the following loading conditions:

a) lightweight condition

b) transit departure and arrival conditions, anchors to be on board and with the maximum related deck loads (for mobile units)

c) towing condition, if relevant

d) normal working conditions at maximum draught with the maximum deck loads and equipment in the most unfavourable positions

e) inspection conditions consistent with the operational procedure

f) severe storm condition assuming the same weight distribution as in item a), except for the necessary ballast adjustments to bring the unit to the survival draught and for the possible dumping of variable deck load if such is specified in the operating procedures

g) severe storm condition assuming the same weight distribution as in item b) with the necessary ballast adjustments to place the unit in the survival draught configuration. In this condition:
   - equipment liable to be disconnected, such as marine riser of drilling units, is assumed disconnected
   - equipment liable to be disconnected and stored on deck, such as stinger of a pipelaying unit, is assumed disconnected and secured on deck
   - equipment having a rest position, such as crane booms, is assumed in rest position.

The maximum amount of loads is assumed to be stored on deck, such as drill pipe stored in the pipe rack for drilling and drilling assistance units. Account may be taken of dumping of variable deck load if specified.

1.1.2 The Society may require stability calculations for additional loading conditions, based on the investigation of the Loading Manual or on the information previously submitted. These additional loading conditions are to be stated in the Design Criteria Statement.

2 Ice and snow conditions

2.1 Additional class notations ICE or ICE CLASS

2.1.1 Survival stability calculations based on particular damage conditions may be requested, in agreement with the party applying for classification, for the following cases:

- units assigned the additional class notation **ICE** or an additional class notation **ICE CLASS**, as defined in Pt A, Ch 1, Sec 2
- units intended to operate in areas where icebergs or ice-islands are expected.

2.2 Snow and frost

2.2.1 For units liable to operate in areas of snow and glazed frost, verification of the stability, intact and damage, is to be performed taking into account the possible overloads due to ice and snow accumulation.

2.2.2 In order to perform the stability calculation, the following amount of ice may be used on the fore third of the vessel's length from the exposed deck and the decks above, including the sides:

- 140 kg/m^2 for horizontal exposed areas
- 70 kg/m^2 for lateral or oblique exposed areas.

For the purpose of the calculation, the masts are excluded.

Different amount of ice corresponding to local regulations or areas where the units are operating may be used instead of the above values.

3 Stability computations

3.1 Definitions

3.1.1 The static stability curve is the righting moment curve plotted against the angle of heel. Unless otherwise specified the curve relates to the most critical axis and is to account for the effect of free surface in liquid compartments.

3.1.2 The wind heeling moment curve herein relates to the curve of the moment of overturning wind forces computed with lever arms extending from the centres of pressure of surfaces exposed to wind to the centre of lateral resistance of the underwater body of the unit assumed to float free of mooring restraint.

However, positioning systems which may adversely affect stability are to be taken into account, but no allowance is to be made for any advantage.

3.1.3 The intercepts are defined by the angles of heel at which the righting and heeling moments are equal and the forces are in equilibrium. The second intercept relates to the unstable equilibrium position.

3.1.4 The permeability of a space is the percentage of that space which can be occupied by water.

3.2 Hypotheses of computation

3.2.1 Free surface effect

Free surface effects are to be considered whenever the filling level in a tank is less than 98% of full condition. Free surface effects need not be considered where a tank is nominally full, i.e. filling level is 98% or above.

Nominally full cargo tanks should be corrected for free surface effects at 98% filling level. In doing so, the correction to initial metacentric height should be based on the inertia moment of liquid surface at 5° of the heeling angle divided by displacement, and the correction to righting lever is suggested to be on the basis of real shifting moment of cargo liquids.

Free surface effects of the flooded wells/recesses arranged in the freeboard deck are to be taken into account for stability calculations.

3.2.2 Permeability

Permeability values are normally required to be in accordance with Tab 1. Other values may be used if adequately supported by calculations and if consistent with operating practices.

Table 1 : Permeability of compartments

Spaces	Permeability
Store rooms	0,60
Accommodation	0,95
Machinery	0,85
Intended for liquids	0 or 0,95 **(1)**
(1) Whichever results in the more severe requirements	

3.2.3 Moonpool

The volume of moonpools, when fitted within the hull in open communication with the sea, is not to be included in calculation of any hydrostatic properties.

3.3 Computation model

3.3.1 The mathematical model used for stability computation is to be to the satisfaction of the Society. In particular the model is to be suitable for the determination of the most critical axis.

The damage stability calculations are to be performed with the lost buoyancy method.

3.3.2 In the case of self-elevating units, the buoyancy of any submerged parts which are not free-flooding (submerged leg structure, spud cans, mat, in particular) is to be taken into account since their vertical position relative to the upper hull may be critical.

3.3.3 Displacement and KG values are to account for the vertical component of mooring forces, and where applicable, the vertical riser tension. The necessary data are to be submitted for the range of applicable water depth.

3.3.4 The computation of the static stability curve are to account for the progressive flooding of spaces. Openings to spaces considered buoyant are to meet requirements of Ch 1, Sec 4, [1.2.2] and Ch 1, Sec 4, [1.2.3].

3.3.5 The flooded stability computation is to be to the satisfaction of the Society and, in particular, is not to introduce discontinuities in the static stability curve.

It is to be checked that the unit is in static equilibrium at every stage of flooding, the flooding water surface being taken parallel to the sea surface.

The computation may be based upon the following assumptions with respect to intermediate flooding:

a) For unsymmetrical flooding of spaces connected by pipes, ducts, etc., flooding is assumed to take place until the sea level is reached before any equalisation occurs.

b) Spaces freely connected by large unobstructed openings are assumed to equalise as they get flooded.

4 Righting moment and heeling moment curves

4.1 General

4.1.1 Curves of righting moments and of wind heeling moments are to be prepared covering the full range of operating draughts, including those in transit conditions, taking into account the maximum deck cargo and equipment in the most unfavourable position applicable. The righting moment curves and wind heeling moments are to relate to the most critical axis. Account is to be taken of the free surface of liquids in tanks. In that respect, the assumptions of [3.2.1] are to be taken into account.

4.1.2 Where equipment is of such a nature that it can be lowered and stowed, additional wind heeling moment curves may be required and such data are to clearly indicate the position of such equipment.

4.2 Wind forces

4.2.1 The curves of wind heeling moments are to be drawn for wind forces calculated by the following formula:

$F = 0,5\ C_S\ C_H\ P\ V^2\ A$

where:

F : Wind force, in N

C_S : Shape coefficient depending on the shape of the structural member exposed to the wind (refer to Tab 2)

C_H : Height coefficient depending on the height above sea level of the structural member exposed to wind (refer to Tab 3)

P : Air specific mass (1,222 kg/m³)

V : Wind speed, in m/s

A : Projected area of the exposed surface of the structural member in either the upright or the heeled condition, in m².

Table 2 : Shape coefficient C_s

Shape	C_S
Spherical	0,40
Cylindrical	0,50
Large flat surface (hull, deckhouse, smooth underdeck areas)	1,00
Drilling derrick	1,25
Wires	1,20
Exposed beams and girders under deck	1,30
Small parts	1,40
Isolated shapes (crane, beam, etc.)	1,50
Clustered deckhouses or similar structures	1,10

Table 3 : Height coefficient C_H

Height above sea level (m)	C_H
0 - 15,3	1,00
15,3 - 30,5	1,10
30,5 - 46,0	1,20
46,0 - 61,0	1,30
61,0 - 76,0	1,37
76,0 - 91,5	1,43
91,5 - 106,5	1,48
106,5 - 122,0	1,52
122,0 - 137,0	1,56
137,0 - 152,5	1,60
152,5 - 167,5	1,63
167,5 - 183,0	1,67
183,0 - 198,0	1,70
198,0 - 213,5	1,72
213,5 - 228,5	1,75
228,5 - 244,0	1,77
244,0 - 259,0	1,79
above 259	1,80

4.2.2 Wind forces are to be considered from any direction relative to the unit and the value of the wind speed is to be taken as follows:

a) In general, a minimum wind speed of 36 m/s (70 knots) is to be used for normal working conditions and a minimum wind speed of 51,5 m/s (100 knots) is to be used for the extreme environmental condition.

b) Where a unit is to be limited in operation in sheltered waters, reduced wind velocities, not less than 25,8 m/s (50 knots) for normal working conditions, may be used and a Note is to be entered on the unit's Classification Certificate restricting the assigned class to the specified wind conditions.

c) For permanent installations, consideration is to be given to the actual site conditions.

4.2.3 In calculating the projected areas to the vertical plane, the area of surfaces exposed to wind due to heel or trim such as under decks surfaces, etc., are to be included using the appropriate shape factor. Open truss work may be approximated by taking 30% of the projected block area of both the front and back section, i.e., 60% of the projected area of one side. In the case of columns, the projected areas of all columns is to be included.

4.2.4 The lever for the wind heeling moment is to be taken vertically from the centre of the lateral resistance or, if available, the centre of hydrodynamic pressure, of the underwater body to the centre of pressure of the areas subject to wind loading. When the installation is fitted with dynamic positioning system, the thrusters effect in [4.3] is to be considered.

4.2.5 The wind heeling moment curve is to be calculated for a sufficient number of heel angles to define the curve. For surface units, the curve may be assumed to vary as the cosine function of unit heel.

4.2.6 Wind heeling moments derived from wind tunnel tests on a representative model of the unit may be considered as alternatives to the method given in [4.2.1] to [4.2.5]. Such heeling moment determination is to include lift and drag effects at various applicable heel angles.

4.3 Thrusters effect

4.3.1 When deemed necessary, for units on which dynamic positioning is installed, the thrusters negative effect on stability is to be taken into account.

Section 3 Stability Criteria

1 Intact stability

1.1 Stability criteria

1.1.1 The stability of a unit in each mode of operation (towing/transit - working - inspection - severe storm) is to meet the criteria given in [1.1.2] to [1.1.4].

1.1.2 For surface and self-elevating units the area under the righting moment curve to the second intercept, or the angle of downflooding, whichever is less, is not to be less than 40% in excess of the area under the wind heeling moment curve to the same limiting angle. See Fig 1.

1.1.3 For column stabilized units the area under the righting moment curve to the second intercept, or the angle of downflooding, whichever is less, is not to be less than 30% in excess of the area under the wind heeling moment curve to the same limiting angle. See Fig 2.

1.1.4 The righting moment curve is to be positive over the entire range of angles from upright to the second intercept.

Figure 1 : Righting moment and heeling moment curves for surface and self-elevating units

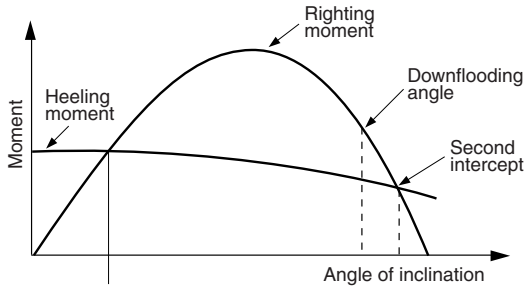

Figure 2 : Righting moment and heeling moment curves for column stabilized units

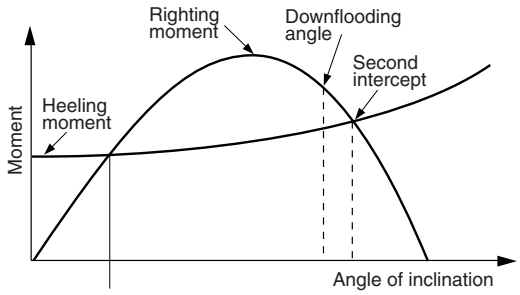

1.2 Severe storm condition

1.2.1 When ballast adjustments to bring the unit to the survival draught are required for the purpose of meeting the intact stability criteria under extreme environment wind speed, the unit is to be capable of attaining the said draught within a period of time of 3 hours.

1.2.2 The procedures recommended and the approximate length of time required to attain severe storm condition, considering both working and transit conditions, are to be contained in the Operating Manual.

1.2.3 It is to be possible to achieve the severe storm condition without the removal or relocation of solid consumables or other variable loads. However, the Society may accept that a unit is loaded past the point at which solid consumables would have to be removed or relocated to go severe storm condition under the following conditions, provided the allowable KG requirement is not exceeded:

a) In a geographic location where weather conditions annually or seasonally do not become sufficiently severe to require a unit to go to severe storm condition, or

b) where a unit is required to support extra deckload for a short period of time that falls well within a period for which the weather forecast is favourable.

The geographic locations, weather conditions and loading conditions in which this is permitted are to be identified in the Operating Manual.

1.3 Alternative criteria

1.3.1 Alternative stability criteria may be considered by the Society, provided an equivalent level of safety is maintained and if they are demonstrated to afford adequate positive initial stability. In determining the acceptability of such criteria, the following is to be considered:

- environmental conditions representing realistic winds (including gusts) and waves appropriate for world-service in various modes of operation
- dynamic response of the unit. Analysis is to include the results of wind tunnel tests, wave tank model tests, and non-linear simulation, where appropriate. Any wind and wave spectra used are to cover sufficient frequency ranges to ensure that critical motion responses are obtained
- potential for flooding taking into account dynamic responses in a seaway
- susceptibility to capsizing considering the unit's restoration energy and the static inclination due to the mean wind speed and the maximum dynamic response
- an adequate safety margin to account for uncertainties.

2 Maximum allowable KG curves

2.1

2.1.1 The maximum allowable vertical centre of gravity (KG) curves are to be established and submitted to the Society for review. Computations are to be made on the basis of the Rules intact and damage stability criteria, as defined in the present Section, for the complete range of operating draughts.

Note 1: When damaged compartments are intended for liquids storage and maximum allowable KG curves on the basis of damage stability criteria are impracticable due to run off weights, damage stability shall be computed by direct application of preprogrammed damage cases.

3 Subdivision and damage stability

3.1 All types of units

3.1.1 Units, according to their structural type, are to comply with [3.2] or [3.3]. This compliance is to be determined by calculations which take into consideration the proportions and design characteristics of the unit and the arrangements and configuration of the damaged compartments.

3.1.2 The ability to reduce angles of inclination by pumping out or ballasting compartments or application of mooring forces, etc., is not to be considered as justifying any relaxation of the requirements.

3.1.3 Anchor handling, bilge and ballast systems, lifesaving equipment, means of escape and emergency power supply and lighting are to be capable of operating in the flooded final equilibrium condition. In particular the angle at equilibrium in the worst damage condition is not to prevent the safe access to and the safe launching of lifeboats and liferafts.

3.2 Surface units and self-elevating units

3.2.1 Every unit is to have sufficient freeboard and be subdivided by means of watertight decks and bulkheads to provide sufficient buoyancy and stability to withstand in general the flooding of any one compartment or any combination of compartments for operating and transit mode of operation consistent with the damage assumptions set out in [4].

Note 1: Surface units for which MARPOL damage stability criteria defined in Pt D, Ch 1, Sec 2, [2.3] are required, may be exempted from complying with the present requirements.

3.2.2 The unit is to have sufficient reserve stability in damaged condition to withstand the wind heeling moment based on a wind speed of 25,8 m/s (50 knots) superimposed from any direction. In this condition the final waterline, after flooding and heeling due to the effect of wind, is to be below the lower edge of any opening through which progressive flooding of buoyant compartments may take place.

Such openings include air pipes (regardless of closing appliances), ventilation air intakes or outlets, ventilators, non-watertight hatches or doorways not fitted with watertight closing appliances.

3.2.3 Self-elevating unit is to provide sufficient buoyancy and stability to withstand the flooding of any single watertight compartment and with the assumption of no wind, taking into account the following criterion (see Fig 3):

$RoS \geq 7° + 1,5\ \theta_s$

without being less than 10°

where:

RoS : Range of Stability, in degrees: $RoS = \theta_m - \theta_s$

θ_s : Static angle of inclination after damage, in degrees

θ_m : Maximum angle of positive stability, in degrees.

The range of stability is determined with no reference to the angle of downflooding.

Figure 3 : Residual damage stability for self-elevating units

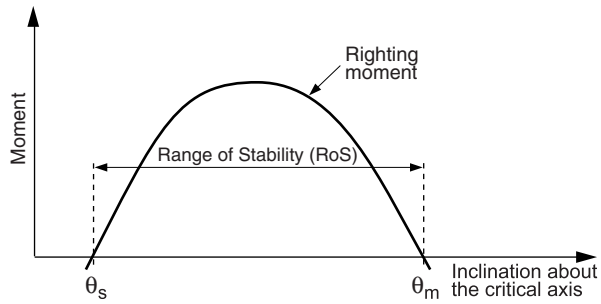

3.3 Column stabilized units

3.3.1 The unit is to have sufficient freeboard and be subdivided by means of watertight decks and bulkheads to provide sufficient buoyancy and stability to withstand a wind heeling moment induced by a wind speed of 25,8 m/s (50 knots) superimposed from any direction in any working or transit condition, taking the following considerations into account (see Fig 4):

a) The angle of inclination after the damage set out in [4.3] is not to be greater than 17°.

b) Any opening below the final waterline is to be made watertight, and openings within 4 m above the final waterline are to be made weathertight.

c) The righting moment curve, after the damage set out in item a), is to have, from the first intercept to the lesser of the extent of weathertight integrity required in item b) and the second intercept or downflooding angle whichever is less, a range of at least 7°. Within this range, the righting moment curve is to reach a value at least twice the wind heeling moment curve, both measured at the same angle (see Fig 4).

Figure 4 : Residual damage stability requirements for column stabilized units

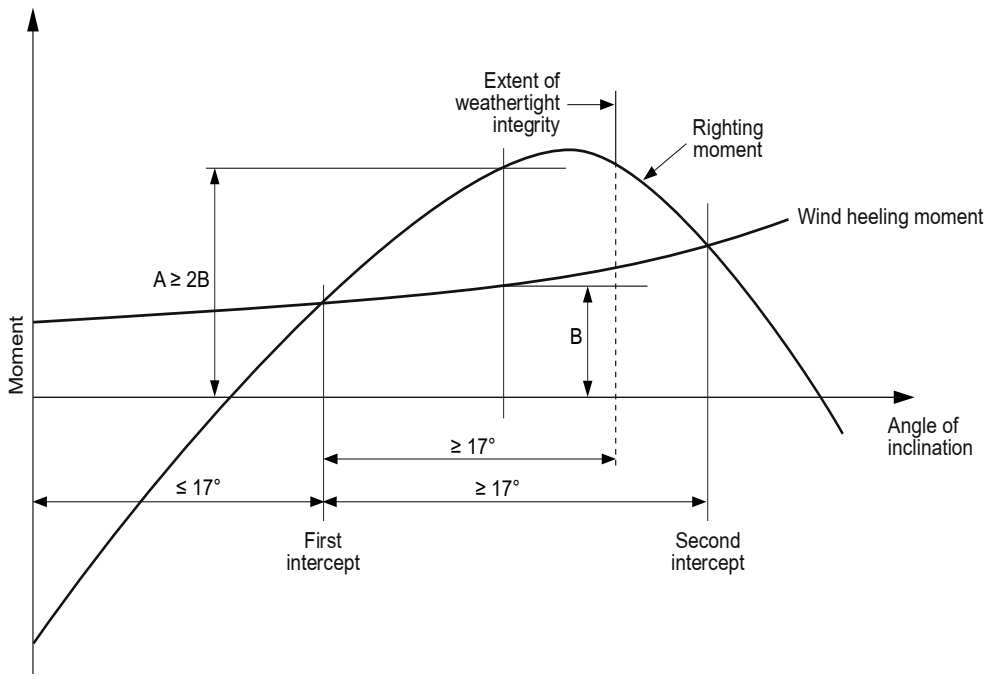

3.3.2 The unit is to provide sufficient buoyancy and stability in any working or transit condition, with the assumption of no wind, to withstand the flooding of any watertight compartment wholly or partially below the waterline referred to in [3.3.1], which is a pump room, a room containing machinery with a salt water cooling system or a compartment adjacent to the sea, taking the following considerations into account:

a) the angle of inclination after flooding is not to be greater than 25°

b) any opening below the final waterline is to be made watertight

c) a range of positive stability of at least 7° is to be provided beyond the first intercept of the righting moment curve and the horizontal coordinate axis of the static stability curve to the second intercept of them or the downflooding angle, whichever is less.

3.4 Alternative criteria

3.4.1 Alternative subdivision and damage stability criteria may be considered by the Society, provided an equivalent level of safety is maintained. In determining the acceptability of such criteria, the following is to be considered:

- extent of damage as set out in Article [4]
- on column stabilized the flooding of any one compartment as set out in [3.3.2]
- the provision of an adequate margin against capsizing.

4 Extent of damage

4.1 Surface units

4.1.1 In assessing the damage stability of surface units, the following extent of damage is to be assumed to occur between effective watertight bulkheads:

a) vertical extent: from the baseline upwards without limit

b) horizontal penetration perpendicularly to the skin: 1,5 m.

4.1.2 The distance between effective watertight bulkheads or their nearest stepped portions which are positioned within the assumed extent of horizontal penetration are not to be less than 3 m; where there is a lesser distance, one or more of the adjacent bulkheads are to be disregarded.

4.1.3 Where damage of a lesser extent than defined in [4.1.1] results in a more severe condition, such lesser extent is to be assumed.

4.1.4 All piping, ventilation systems, trunks, etc., within the extent of damage referred to in [4.1.1] are to be assumed to be damaged; positive means of closure are to be provided, in accordance with Ch 1, Sec 4, [2], at watertight boundaries to preclude the progressive flooding of other spaces which are intended to be intact.

4.2 Self-elevating units

4.2.1 In assessing the damage stability of self-elevating units, the following extent of damage is to be assumed to occur between effective watertight bulkheads:

a) vertical extent: from the baseline upwards without limit

b) horizontal penetration perpendicularly to the skin: 1,5 m.

4.2.2 The distance between effective watertight bulkheads or their nearest stepped portions which are positioned within the assumed extent of horizontal penetration are not to be less than 3 m; where there is a lesser distance, one or more of the adjacent bulkheads are to be disregarded.

4.2.3 Where damage of a lesser extent than defined in results in a more severe condition, such lesser extent is to be assumed.

4.2.4 Where a mat is fitted, the extent of damage defined in [4.2.1] to [4.2.3] is applicable to both the platform and the mat but needs not apply simultaneously unless deemed necessary by the Society due to their close proximity to each other.

Note 1: close proximity may be generally considered to mean within 1,5 m distance.

4.2.5 All piping, ventilation systems, trunks, etc., within the extent of damage referred to in [4.2.1] are to be assumed to be damaged; positive means of closure are to be provided, in accordance with Ch 1, Sec 4, [2], at watertight boundaries to preclude the progressive flooding of other spaces which are intended to be intact.

4.3 Column stabilized units

4.3.1 In assessing the damage stability of column stabilized units, the following extent of damage is to be assumed:

a) Only those columns, underwater hulls and braces on the periphery of the unit are to be assumed to be damaged and the damage is to be assumed in the exposed outer portions of columns, underwater hulls and braces.

Note 1: The outer portions of a member are defined as portions located outboard of a line drawn through the centres of the peripheral columns of the unit.

Note 2: Special consideration is to be given to units of particular design and to units provided with efficient fendering.

b) Columns and braces are to be assumed to be flooded by damage having a vertical extent of 3 m occurring at any level between 5 m above working draught and 3 m below transit draught.

Where a watertight flat is located within this region, the damage is to be assumed to have occurred in both compartments above and below the watertight flat in question.

Lesser distances above or below the draughts may be applied to the satisfaction of the Society, taking into account the actual conditions of operation. However, in all cases, the required damage region is to extend at least 1,5 m above and below the draught specified in the Operating Manual.

c) No vertical bulkhead fitted in columns is to be assumed to be damaged, except where bulkheads are spaced closer than a distance of one eighth of the column perimeter, at the draught under consideration, measured at the periphery, in which case one or more of the bulkheads are to be disregarded.

d) Horizontal penetration of a member damage is to be assumed to be 1,5 m, measured at right angle to the shell of the member.

e) Underwater hull or footings are to be assumed to be damaged when the unit is in a transit condition in the same manner as indicated in items a), b), d) and either item c) or item f), having regard to their shape.

f) All piping, ventilation systems, trunks, etc., within the extent of damage are to be assumed to be damaged; positive means of closure are to be provided, in accordance with Ch 1, Sec 4, [2], at watertight boundaries to preclude the progressive flooding of other spaces which are intended to be intact.

Section 4 Watertight Integrity and Weathertight Integrity

1 General

1.1 Definitions

1.1.1 A closing appliance is said to be watertight if it remains tight and is capable of withstanding the hydrostatic pressure under service and damage conditions defined in Ch 1, Sec 3, [3]. The waterhead under damage conditions is to account for the sinkage and inclinations of the unit induced by the combined effect of wind and flooding.

1.1.2 A closing appliance is said to be weathertight if it is capable, under any sea conditions, of preventing the penetration of water into the unit. A weathertight closing appliance is not required to remain tight under the hydrostatic pressure occurring after damage.

1.1.3 A manually operated closing appliance meeting the requirements of [1.1.1] or [1.1.2] is not to be considered water or weathertight unless, simultaneously:

a) the closing appliance is unambiguously required in the Operating Manual to be closed in a particular mode of operation of the unit

b) the closure of the appliance has been ascertained by the party applying for classification to be fully practicable and compatible with the particular mode of operation of the unit.

1.1.4 A space is considered buoyant and taken into account in the stability calculations if it complies with [1.2].

1.1.5 A weathertight enclosure is a decked structure above a buoyant space with enclosing bulkheads of adequate strength with any opening fitted with weathertight closing appliances. Enclosed superstructures meeting the requirements of the International Convention on Load Lines, 1966 are considered as weathertight enclosures.

1.1.6 Exposed herein means directly exposed to or not protected from the effect of the sea, spray and rain by a weathertight enclosure.

1.1.7 Downflooding means any flooding of the interior or any part of the buoyant structure of a unit through openings which cannot be closed weathertight, watertight or which are required for operations reasons to be left open in all weather conditions.

1.2 Buoyant spaces

1.2.1 Except where otherwise stated, spaces considered buoyant for the purpose of the stability computations are to comply with the following requirements.

1.2.2 If the space is considered buoyant in the damage stability calculation all its openings not fitted with watertight closing appliances are to be located above any final damage water plane.

1.2.3 If the space is considered buoyant in the intact stability calculation any opening in the space, which may become submerged before the heeling angle at which the required area under the intact righting moment curve is achieved, is to be fitted with a weathertight closing appliance or protected by a weathertight enclosure. In addition watertight closing appliances are to be provided for openings which may become submerged before the first intercept equilibrium angle.

1.2.4 All watertight and weathertight boundaries of the considered compartments, spaces and their closing appliances are to have adequate strength to be determined in accordance with the applicable requirements of the Rules.

1.2.5 A drainage system is to be provided for watertight compartments as required in Pt C, Ch 1, Sec 7, [6].

1.3 Operating manual

1.3.1 An operating manual as defined in Pt A, Ch 1, Sec 4 is to be submitted.

1.3.2 A plan identifying the location of all watertight and weathertight closures and all non-protected openings and identifying the position open/closed of all non-automatic closing devices is to be submitted to the Society for review. This plan is to be included in the Operating Manual.

2 Watertight integrity

2.1 General requirements

2.1.1 All units are to be adequately subdivided with an adequate number of watertight decks and bulkheads to meet the damage stability requirements.

2.1.2 All surface type units are to be fitted with a collision bulkhead. Sluice valves, cocks, manholes, watertight doors, are not to be fitted in the collision bulkhead. Elsewhere, watertight bulkheads are to be fitted as necessary to provide transverse strength and subdivision.

2.1.3 The number of openings in watertight subdivisions is to be kept to a minimum compatible with the design and safe operation of the unit. Where penetrations of watertight decks and bulkheads are necessary for access, piping, ventilation, electrical cables, etc., arrangements are to be made to restore the integrity of the enclosed compartments.

2.1.4 In order to minimise the risk of progressive flooding, pipes and ducts are to be, insofar as practicable, routed clear of areas liable to be damaged as defined in Ch 1, Sec 3, [4]. When pipes and ventilation ducts are located within those areas liable to be damaged and serve more than one compartment, they are to be provided with a valve in each compartment served, and non-watertight ventilation ducts are to be provided with a watertight valve at each penetration of a watertight boundary.

2.1.5 Where valves are provided at watertight boundaries to maintain watertight integrity, these valves are to be capable of being locally operated. Remote operations may be from a pump room or other normally manned space, a weather deck, or a deck which is above the final waterline after flooding. In the case of a column stabilized unit this is to be the central ballast control station. Valve position indicators are to be provided at the remote control station.

2.1.6 Watertight doors are to be designed to withstand water pressure to a head up to the bulkhead deck or freeboard deck respectively. A prototype pressure test is to be conducted for each type and size of door to be installed on the unit at a test pressure corresponding to at least the head required for the intended location. The prototype test is to be carried out before the door is fitted. The installation method and procedure for fitting the door on board shall correspond to that of the prototype test. When fitted on board, each door is to be checked for proper seating between the bulkhead, the frame and the door. Large doors or hatches of a design and size that would make pressure testing impracticable may be exempted from the prototype pressure test, provided that it is demonstrated by calculations that the doors or hatches maintain watertight integrity at the design pressure, with a proper margin of resistance. After installation, every such door, hatch or ramp shall be tested by means of a hose test or equivalent.

2.1.7 For self elevating units the ventilation system valves required to maintain watertight integrity are to be kept closed when the unit is afloat. Necessary ventilation in this case is to be arranged by alternative approved methods.

2.2 Scuppers, inlets and sanitary discharges

2.2.1 Scuppers, inlets and discharges are to satisfy the following requirements:

a) Scuppers and discharges leading through the shell from buoyant spaces are to have an automatic non return valve with a positive means for closing from an accessible position above the final damage waterline, or two automatic non return valves, the upper of which is always to be accessible in service.

b) In manned machinery spaces sea inlets and discharges in connection with the operation of machinery may be controlled by locally operated valves situated in a readily accessible position.

c) Indicators showing whether the valves mentioned in item a) or b) above are closed or open are to be provided.

d) Scuppers leading from non buoyant space are to be led overboard.

2.3 Overflows

2.3.1 Overflow pipes are to be located giving due regard to damage stability and to the location of the worst damage waterline. Overflow pipes which could cause progressive flooding are to be avoided unless special consideration has been taken in the damage stability review.

2.3.2 In cases where overflow pipes terminate externally or in spaces assumed flooded, the corresponding tanks are also to be considered flooded. In cases where tanks are considered damaged, the spaces in which their overflows terminate are also to be considered flooded.

2.3.3 Overflows from tanks not considered flooded as a result of damage and located above the final immersion line may require to be fitted with automatic means of closing.

2.3.4 Where overflows from tanks intended to contain the same liquid or different ones are connected to a common main, provision is to be made to prevent any risk of intercommunication between the various tanks in the course of movements of liquid when emptying or filling.

2.3.5 The openings of overflow pipes discharging overboard are generally to be placed above the load waterline; they are to be fitted where necessary with non-return valves on the plating, or any other device of similar efficiency.

2.4 Internal openings

2.4.1 The means to ensure the watertight integrity of internal openings are to comply with the following:

a) Doors and hatch covers which are used during the operation of the unit while afloat are to be remotely controlled from the central ballast control station and are also to be operable from each side. Open/shut indicators are to be provided at the control station. In addition, remotely operated doors provided to ensure the watertight integrity of internal openings which are used while at sea are to be sliding watertight doors with audible alarm. The power, control and indicators are to be operable in the event of main power failure. Particular attention is to be paid to minimizing the effect of control system failure. Each power-operated sliding watertight door is to be provided with an individual hand-operated mechanism. It is to be possible to open and close the door by hand at the door itself from both sides.

b) Doors and hatch covers in self-elevating units, or doors placed above the deepest load line draft in column-stabilized and surface units, which are normally closed while the unit is afloat, may be of the quick acting type and are to be provided with an alarm system (e.g. light signals) showing personnel both locally and at the central ballast control station whether the doors or hatch covers in question are open or closed. A notice is to be affixed to each such door or hatch cover stating that it is not to be left open while the unit is afloat.

2.4.2 The means to ensure the watertight integrity of internal openings which are kept permanently closed during the operation of the unit, while afloat, are to comply with the following:

a) A notice is to be affixed to each closing appliance stating that it is to be kept closed while the unit is afloat.

Note 1: The present requirement is not applicable to manholes fitted with watertight bolted covers.

b) An entry is to be made in the official logbook or tour report, as applicable, stating that all such openings have been witnessed closed before the unit becomes waterborne.

c) The closing appliances are to have strength, packing and means for securing which are sufficient to maintain watertight integrity under the design load.

2.5 External openings

2.5.1 External openings such as air pipes (regardless of closing appliances), ventilators, ventilation intakes and outlets, non-watertight hatches and weathertight doors, which are used during operation of the unit while afloat, are not to submerge when the unit is inclined to the first intercept between the righting moment and wind heeling moment curves in any intact or damaged condition.

Openings such as side scuttles of the non-opening type, manholes and small hatches, which are fitted with appliances to ensure watertight integrity, may be submerged, provided that the requirements of [2.5.3] and [2.5.4] are complied with. Such openings are not to be regarded as emergency exits.

2.5.2 As a rule, openings such as side scuttles of the non-opening type, manholes and small hatches, that may be submerged, are not allowed in the column of column stabilized units.

2.5.3 All downflooding openings the lower edge of which is submerged when the unit is inclined to the first intercept between the righting moment and wind heeling moment curves in any intact or damaged condition are to be fitted with a suitable watertight closing appliance, such as closely spaced bolted covers.

2.5.4 External openings fitted with appliances to ensure watertight integrity, which are kept permanently closed while afloat, are to comply with the requirements of [2.4.2], a), b) and c).

2.5.5 Where flooding of chain lockers or other buoyant volumes may occur, the openings to these spaces are to be considered as downflooding points.

3 Weathertight integrity

3.1 Scope

3.1.1 The conditions given in [3.2] are applicable to all units liable to operate in waters other than sheltered waters. Alternative requirements are to be given for units intended to be used in sheltered waters only after examination of each particular case.

3.1.2 The attention of the Owners and/or the party applying for classification is directed to the applicable requirements of the MODU Code and of the ILLC 1966.

3.2 Assignment conditions

3.2.1 The assignment conditions are applicable to openings leading to spaces considered buoyant in the intact stability computation, to weathertight closing appliances and to weathertight enclosures. Where buoyancy in the damage conditions is required, the applicable requirements of [2] are to be satisfied.

3.2.2 In accordance with [1.2.4], weathertight boundaries and closing appliances fitted to exposed decks and bulkheads of a space or enclosure mentioned in [3.2.1] are to comply with the applicable requirements of the Ship Rules, applying the pertinent loads as described in Pt D, Ch 1, Sec 5.

Note 1: The present requirement concerns particularly the doors, hatchways covers, machinery casings and ventilators coamings.

3.2.3 Any opening, such as an air pipe, ventilator, ventilation intake or outlet, non-watertight sidescuttle, small hatch, door, etc., having its lower edge submerged below a waterline associated with the zones indicated in items a) and b), is to be fitted with a weathertight closing appliance to ensure the weathertight integrity, when:

a) a unit is inclined to the range between the first intercept of the right moment curve and the wind heeling moment curve and the angle necessary to comply with the requirements of Ch 1, Sec 3, [1.1] during the intact condition of the unit while afloat; and

b) a column stabilized unit is inclined to the range:
   - necessary to comply with the requirements of Ch 1, Sec 3, [3.3.1] and with a zone measured 4,0 m perpendicularly above the final damaged waterline referred to Fig 1, and
   - necessary to comply with the requirements of Ch 1, Sec 3, [3.3.2].

Figure 1 : Minimum weathertight integrity requirements for column stabilized units

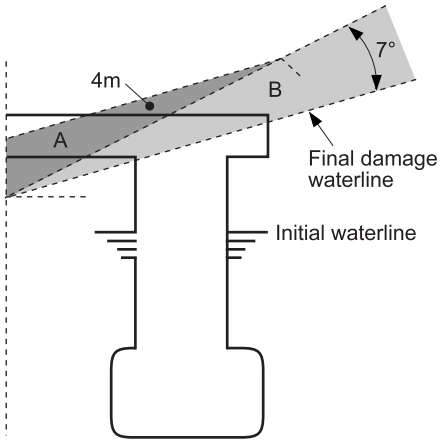

A = 4m zone of weathertightness
B = 7° zone of weathertightness

3.2.4 External openings fitted with appliances to ensure weathertight integrity, which are kept permanently closed while afloat, are to comply with the requirements of [2.4.2], items a) and b).

3.2.5 External openings fitted with appliances to ensure weathertight integrity, which are secured while afloat are to comply with the requirements of [2.4.1].

3.2.6 All access openings in exposed bulkheads of weathertight enclosures are to be fitted with doors of steel or other equivalent material so arranged that they can be operated from both sides of the bulkhead. The means of securing these doors weathertight are to consist of gaskets and clamping devices or other equivalent means permanently attached to the bulkhead or to the doors themselves. Unless otherwise specified the height of the sills of access openings in exposed bulkheads is not to be less than 380 mm above the deck.

3.2.7 Hatchways and other openings in exposed decks of a space or enclosure mentioned in [3.2.1] are to be provided with coamings and weathertight steel covers or other equivalent material fitted with gaskets and clamping devices. The height of coamings is generally required to be not less than 600 mm but may be reduced, or the coamings omitted entirely, subject to the approval of the Society, in each particular case, taking into consideration the structural type and stability characteristics of the unit, the space to which the opening leads, its size and location.

Manholes and flush scuttles located on exposed decks or within enclosures not considered weathertight are to be closed by substantial covers capable of being made watertight. Unless secured by closely spaced bolts, the covers are to be permanently attached.

3.2.8 Ventilators leading to spaces or enclosures mentioned in [3.2.1] are to comply with the following:

a) Coamings of steel or other equivalent material having adequate strength are to be provided and efficiently connected to the deck. The coaming of a ventilator passing through non weathertight enclosures is to be fitted at the exposed deck of the buoyant space.

b) Coamings are to have a height of at least 900 mm above the deck of a buoyant space and 760 mm above the deck of a weathertight enclosure. For self propelled surface units ventilators coamings are to be at least 900 mm in height if located upon exposed freeboard and raised quarter decks, and upon enclosed superstructures decks situated forward of a point located a quarter of the unit's length from the forward perpendicular.

c) Ventilator openings are to be provided with weathertight closing appliances permanently attached or, subject to the approval of the Society, conveniently stowed near the ventilators to which they are to be fitted. The weathertight closing appliance may however not be required where the ventilator coaming exceeds 2,3 m above the deck and where the intact stability calculations show that the ventilator opening is not submerged before the heeling angle at which the required area ratio is achieved.

3.2.9 Any exposed portion of air pipes to ballast or other tanks considered buoyant in the intact stability calculation is to be of substantial construction and is to be provided with permanently attached weathertight closing appliances. Their height from the exposed deck to the point where water may have access below is to be at least 760 mm on the deck of a buoyant space and 450 mm on the deck of a weathertight enclosure. Lower heights may be accepted by the Society after examination in each case taking into consideration the stability calculations.

3.2.10 Openings to machinery spaces are to be protected by weathertight enclosures or steel casings of equivalent strength and weathertight integrity. Ch 1, Sec 3, [3.1.3] is applicable to machinery spaces with emergency equipment.

Part B
Structural Safety

CHAPTER 2
ENVIRONMENTAL CONDITIONS - LOADINGS

Section 1 General

1 General

1.1 Application

1.1.1 The present Chapter contains requirements applicable to all offshore units for which the structural type notations and the service notations are defined in Pt A, Ch 1, Sec 2, [4] and Pt A, Ch 1, Sec 2, [5] respectively.

2 Design data

2.1 General

2.1.1 It is the responsibility of the party applying for classification to specify, for each condition of operation of the unit, the following data on which the structural design of the unit is based as defined in Pt A, Ch 1, Sec 1:

- working condition
- severe storm condition
- transit condition
- other condition, as applicable to subject unit.

2.1.2 Data mentioned in [2.1.1] are to include, for each condition, a description of:

- the general configuration of the unit
- environmental conditions
- any other relevant data.

2.2 Design Criteria Statement

2.2.1 Design data mentioned in [2.1], on the basis of which class is assigned to the unit, is to be entered in the Design Criteria Statement (see Pt A, Ch 1, Sec 1, [1.6]).

3 Operational data

3.1 Situation of the unit

3.1.1 The draught or elevation, the situation of main equipment and other relevant parameters defining the general situation of the unit in each condition are to be specified by the party applying for classification, taking into account their possible range of variation (e.g. the range of draught of a floating unit, the drill-floor position of a cantilever rig, etc.).

3.1.2 When the structural design relies upon the adjustment of some operational parameters (e.g. altering the loading, draught, trim, orientation or mooring systems parameters) in specific conditions, then the corresponding data are to be clearly specified and are to be entered in the Design Criteria Statement. Where necessary, adequate procedures are to be provided in the Operating Manual.

3.2 Operational loads

3.2.1 Operational loads are to be specified by the party applying for classification in accordance with provisions of Ch 2, Sec 3, [1.3].

3.2.2 Operational instructions concerning the operational loads, including but not limited to the permissible deck loads, variable loads limits and preloading are also to be clearly stated in the Operating Manual.

4 Environmental conditions

4.1 Environmental data

4.1.1 Environmental data on which the structural design of the unit is based are to be specified by the party applying for classification.

They are to include:

- data for the extreme (severe storm) condition
- data for the limiting environmental (threshold) conditions considered for each working condition, for towing/transit condition (where applicable) or any other specific design condition of the subject unit (e.g. jack-up preloading)
- the long term distribution of environmental data on which the design of the structure for fatigue is based
- data for any other particular design condition of the subject unit.

Note 1: Different limiting conditions may be associated with different operational loads arising from the various equipment related to each unit service but also from a given equipment (e.g. crane, etc.).

Note 2: For surface units, reference is also to be made to the provisions associated with navigation notation when such notation is granted.

4.1.2 As stipulated in Pt A, Ch 1, Sec 1, it is the responsibility of the party applying for classification to ascertain that the environmental parameters are correct, complete and compatible with the use of the unit, in accordance with provisions of [4.2].

4.1.3 Environmental data are to be specified in accordance with provisions of Ch 2, Sec 2.

The Society may consider alternative specifications provided that the characteristic parameters most pertinent to the design of the unit are available for the purpose of Rules application.

4.2 Environmental loads

4.2.1 Environmental loads are to be evaluated in accordance with provisions of Ch 2, Sec 3, [1.4] and Ch 2, Sec 3, [3].

4.2.2 In order to meet the intent of the Rules, the environmental data for the extreme (severe storm) condition and the methods by which the maximum loads are evaluated are to be such that the resulting loads and stresses in structural members have a return period not lower than:

- 20 years except otherwise specified in Data Criteria Statement
- 50 years for units intended to be granted the service notation **drilling** or **drilling assistance**, and for drag-dominated structures (e.g. jack-ups)
- 100 years for permanent installations.

Note 1: This corresponds to probability of exceedence per passing wave of approximately 10^{-8}, $10^{-8,4}$ and $10^{-8,7}$ at the reference site.

4.2.3 In all other conditions, environmental loads are normally to be taken as the maximum loads over a 3 hour period, conditional upon the occurrence of specified conditions.

4.3 Accidental situations

4.3.1 Depending on the type and service of the unit, a risk analysis may be required to assess the risk of explosion, collision and dropped objects.

4.3.2 As a rule, the design of the primary structure is to consider the possibility of accidental loads as may result from collisions, dropped objects, fire or explosions.

The risk of accidental damage is normally minimised by suitable preventive and protective measures such as:

a) adequate operation and maintenance of structures and equipment as stipulated in Pt A, Ch 1, Sec 1, [3.3]; procedures are to specify all operational limits and related limiting environmental conditions

b) appropriate safety requirements for visiting structures with respect to the limiting environmental conditions, the communication and survey procedures for berthing, landing, stowage and disconnection

c) adequate arrangement of structure and facilities

d) adequate protective arrangements such as guarding, fendering, weak links, quick release mechanisms, shut-off means for high pressure piping systems, etc.

4.3.3 The Society is to be advised when the provisions of [4.3.2] cannot be satisfactorily achieved under particular operational conditions. The party applying for classification may then be required to consider some specific accidental loadings.

4.3.4 In accidental conditions, environmental loads are to be evaluated taking into account the circumstances in which the considered situation may realistically occur, and the time needed for evacuation or other remedial action. In principle, the return period of such environmental loads need not be taken greater than 1 month, unless otherwise specified for the considered unit.

Section 2 Environmental Data

1 General

1.1 Documentation to be submitted (all units)

1.1.1 The party applying for classification is to specify the data defining the environmental conditions to which the unit may be subject in each condition of operation, viz.:

- wave data
- wind data
- current data
- waterdepth and tide data
- atmospheric and sea temperatures data

and, where applicable:

- ice and snow data
- earthquake conditions
- any other relevant information.

1.2 Permanent installations

1.2.1 For permanent installations, the party applying for classification is to submit, in addition to documentation required in [1.1] and in accordance with provisions of Pt A, Ch 1, Sec 1, adequate documentation describing the environmental conditions at site.

1.2.2 The party applying for classification is to derive as necessary from these data the characteristic parameters required for the purpose of Rules application.

The statistical techniques used to derive the required characteristic parameters are to be documented to the satisfaction of the Society.

1.2.3 For waves, wind, current, and for water level when relevant, the extreme omnidirectional data, with a return period as specified in Ch 2, Sec 1, [4.2.2] are to be presented (independent extremes).

1.2.4 Directional data may be considered, where applicable, if sufficient information is available to support their use, subject to the agreement of the Society.

1.2.5 When adequate information is available on the joint occurrence of elements, design data may be further specified as sets of associated values.

2 Waves

2.1 General

2.1.1 Waves data are to be specified, for the purpose of air gap determination, if applicable, and for strength and fatigue analysis. The data are to be specified in a manner compatible with the design techniques and to include design data for each condition of the unit, and long term data for fatigue analysis.

2.2 Design data

2.2.1 Where the spectral approach is used, the design sea states are to be specified by their significant wave heights, and mean zero up-crossing (or spectral peak) period, together with adequate formulations of spectral energy distribution and, as applicable, spectral dispersion in direction.

2.2.2 For a given condition of operation of the unit, the maximum significant wave height is to be specified for a sufficient range of periods, such that the maximum response of the unit is properly covered for all sea states liable to be met in such condition (refer also to Ch 2, Sec 3, [6.2.2]).

Directional data may be considered, where applicable.

2.2.3 Where no particular wave data are specified, significant wave height and mean zero-up crossing period in the (extreme) severe storm condition is to be assumed as follows:

$H_S = 1,65\ T_0 - 4,33$ for $T_0 < 13$ seconds

$H_S = 17$ m for $T_0 \geq 13$ seconds

where:

H_S : Significant wave height, in m

T_0 : Mean zero up-crossing period, in seconds.

2.2.4 Where the design wave approach is used, waves data are to be specified for each design condition in terms of wave height, associated period or range of periods and, where applicable, associated range of still water level.

2.3 Long term data

2.3.1 Where spectral approach is used, the sea states joint probability of occurrence $p(H_S, T_0)\ dH_S\ dT_0$ is to be specified by means of a wave scatter diagram or of any other appropriate format.

2.3.2 Where the design wave approach is used for fatigue evaluation, the long term distribution of wave heights and the corresponding wave periods are to be specified.

3 Wind

3.1 Wind specification

3.1.1 Wind data are to be specified for the purpose of global and local strength analysis and for mooring and stability analysis of floating units.

3.1.2 The wind design data are to be specified as the wind speed at a reference height above the water level (usually taken as 10 m above the mean water level) and averaged over 1 min., or another suitable reference time interval.

The wind speeds averaged over other time intervals and the vertical profiles of wind speed, which are required for the calculation of wind loads, are to be derived from the above reference wind speed using recognised relations.

Directional data may be considered, where applicable.

3.2 Values for classification

3.2.1 Where no particular wind data are specified, the one min. wind velocity at 10 m above the mean water level is to be taken for classification as provided by Tab 1.

3.2.2 Wind speeds for stability analysis are to be taken as provided by Tab 1, unless otherwise provided for in Ch 1, Sec 2.

Table 1 : Winds speeds for classification

Condition of operation	Wind speed (m/s)	
	Column stabilized units	Other units
Transit	36,0 **(1)**	51,5
Working	36,0	36,0
Severe storm	51,5	51,5
(1) If ballasting systems remain fully operational during transit, otherwise 51,5 m/s is to be considered.		

4 Current

4.1 Current specification

4.1.1 Current data are to be primarily specified for the purposes of load analysis of drag dominated structures and mooring analysis of floating units.

4.1.2 The current velocity profiles are to be specified taking into account the contribution of all (circulational, tidal and wind generated) relevant components. Unusual bottom or stratified effects are to be clearly stated.

Directional profiles may be considered where applicable.

4.2 Values for classification

4.2.1 Where no particular data are specified, the following current velocities U, in m/s, is to be used for classification:

- at sea bottom:

  $U = 0,5$
- at the still water level:

  $U = 0,5 + 0,02\ V_{10}$

where:

V_{10} : 10 minutes wind speed, in m/s, at 10 m above still water level.

5 Waterdepth and tides

5.1 General

5.1.1 For general reference, the maximum nominal waterdepth for operation of the unit is to be specified.

5.2 Bottom supported units

5.2.1 For bottom supported units, the design maximum waterdepth (as defined in Part A, Chapter 1, i.e. including all tide and surge components), is to be specified for the purposes of air gap determination and for strength and fatigue analysis.

5.2.2 For the purpose of strength analysis of the unit at a given site, consideration is also to be given to the minimum waterdepth associated with extreme waves.

5.2.3 Directional data (i.e. data depending on the direction of incoming elements) may be considered where applicable.

6 Design temperatures

6.1 Principle

6.1.1 Design temperature of structural elements is to be taken as follows:

- for the emerged part of the structure (splash zone and above), the design temperature is the air temperature defined in [6.2]
- for the immersed part of the structure, the design temperature is the water temperature defined in [6.3].

6.1.2 The Society may accept values of design temperature obtained through direct calculation, provided that:

- the calculations are based on air temperature and water temperature as defined in [6.2] and [6.3]
- the calculations provide a design temperature corresponding to the worst condition of the unit in operation, towing/transit and inspection
- a complete calculation report, including a documentation of methods and software, is submitted to the Society.

6.1.3 For units intended to receive the service notation **liquefied gas storage**, **gas production unit** or **gas liquefaction unit**, the design temperature of structural elements is to be taken as required in NR542 Classification of Floating Gas Units.

6.2 Air temperature

6.2.1 Air temperature requested by [6.1] is to be taken as the mean air temperature of the coldest day (24 h) of the year for any anticipated area of operation.

6.2.2 Where no particular value is specified, classification is to be based upon the following air temperature:

- 0°C for units not intended to operate in cold areas
- – 10°C for units intended to operate in cold areas.

6.3 Water temperature

6.3.1 Water temperature requested by [6.1] is to be taken as the water temperature of the coldest day (24 h) of the year for any anticipated area of operation.

6.3.2 Where no particular value is specified, classification is to be based upon 0°C water temperature.

7 Ice and snow

7.1 Operating in ice conditions

7.1.1 For units other than surface units, the following ice data are to be provided if the additional class notation **ICE** or an additional class notation **ICE CLASS** is intended to be granted:

- ice conditions liable to be met (ice-floe, pack, ice bank, etc.)
- extreme level ice thickness, type (first or multi-year) and drifting speed
- extreme ridge size and type (first or multi-year)
- existence of ice-islands and/or icebergs
- a table of the various ice thicknesses and types with associated probability of observation at reference site
- a ridge size classification with associated probability of observation at reference site.

For level ice, the following properties are to be specified:

- crushing strength
- bending strength
- buckling strength
- or brine volume.

Note 1: strength values may be defined by an absolute figure or by the brine volume using an appropriate formulation.

7.1.2 Snow and frost

For units liable to operate in areas of snow and glazed frost the following possibilities are to be considered:

- snow accumulation on exposed decks
- ice and snow accumulation on secondary structures or unit's undersides
- ice accretion on lattice structures, such as derricks, crane booms, etc.

Relevant parameters (thickness, density) corresponding to these conditions and the associated metocean parameters (e.g. the wind speed) are to be specified.

8 Soil and earthquake data

8.1 General

8.1.1 For bottom-supported structures and for permanent installations, necessary soil data and, where relevant, earthquake data are to be specified and are to be included in the Design Criteria Statement.

8.1.2 For permanent installations, the soil characteristics are to be taken from the soil survey performed on the location where the platform is intended to be installed.

The derivation of the soil engineering characteristics is to be made using recognised techniques and are to be documented to the satisfaction of the Society.

8.2 Soil

8.2.1 As needed, the nature, strength and behavioural parameters (such as liquefaction potential, long term consolidation, etc.) of soil for which the unit is designed in relation with the expected type of foundation are to be specified.

8.2.2 As a minimum, the maximum design penetration of leg tip, footings, mat, etc., below mud line is to be specified.

8.3 Earthquake

8.3.1 Parameters defining intensity of ground motions are to be specified using a suitable format in relation with techniques of analysis and seismic knowledge of the area. Usually, magnitudes are defined for both a “design” and a “rare intense” earthquakes.

Section 3 Design Loads

1 Categories of loads

1.1 General

1.1.1 The following categories of loads are considered: fixed, operational, environmental, accidental, testing and temporary construction loads.

1.2 Fixed loads

1.2.1 Fixed load or light weight is the weight of the complete unit with all permanently attached machineries, equipment and other items of outfit such as:

- piping
- deckings, walkways and stairways
- fittings
- spare parts
- furniture.

The light weight of the unit includes the weight, to their normal working level, of all permanent ballast and other liquids such as lubricating oil and water in the boilers, but excludes the weight of liquids or other fluids contained in supply, reserve or storage tanks.

1.3 Operational loads

1.3.1 Operational loads are loads associated with the operation of the unit and include:

- the weights of all moving equipment and machineries
- variable loads of consumable supplies weights such as:
  - casing, drill and potable waters
  - mud
  - cement
  - oil
  - gas
  - chemical products
- other storage loads
- hydrostatic loads (buoyancy)
- liquids in tanks
- ballast loads
- riser tensioner forces
- hook or rotary table loads
- loads resulting from lifting appliances in operation
- loads due to pipelaying, etc.

Dynamic loads induced by equipment in operation are to be considered as operational loads.

1.4 Environmental loads

1.4.1 Environmental loads are loads resulting from the action of the environment and include loads resulting from:

- wind
- waves
- current
- ice and snow where relevant
- earthquake where relevant.

Dynamic loads induced by unit's motions (inertia forces) or by dynamic response to environment action are to be considered as environmental loads.

Reactions to environmental loads (such as those of foundations or mooring loads) are to be considered as environmental loads.

1.5 Accidental loads

1.5.1 Accidental loads are loads that may be sustained during accidental events, such as:

- collisions by supply boats or other craft
- impact by dropped objects
- breaking of mooring lines.

Accidental loads also include loads resulting of such event (damaged situations) or of other exceptional conditions to be determined with regard to the activities of the unit in accordance with Ch 2, Sec 1, [4.3].

1.6 Testing loads

1.6.1 Testing loads are loads sustained by the structure during testing phases of tanks or equipment.

1.7 Temporary construction loads

1.7.1 In accordance with the provisions of Part A, Chapter 1, temporary construction loads not resulting from the tests required to be performed by the applicable Rules requirements are not subject to review by the Society unless a specific request is made. The attention of the Builder is however called upon the provisions of Part B, Chapter 3 concerning construction procedures liable to affect, for instance by prestressing, the strength of the unit.

2 Fixed and operational loads

2.1 General

2.1.1 The fixed and operational loads defined in [1.2] and [1.3] are to be clearly specified using a format acceptable by the Society. Where stated, minimum Rules prescribed loads are to be taken into consideration.

2.2 Load distribution

2.2.1 For the purpose of overall structural calculations, a complete description of load distribution is to be provided.

A sufficient number of load cases, adequately representing all possible distributions in each condition of operation, are to be defined unless corresponding restrictions are entered in the Operating Manual.

2.3 Loads on decks

2.3.1 Operational loads acting on decks are to be clearly specified on the permissible loadings decks drawings required in Pt A, Ch 1, Sec 4, [2.3]. All the distributed and concentrated loads in all deck areas are to be shown on the drawings.

For the purpose of local scantling, design distributed deck loads including deck self-weight are not to be taken less than given on Tab 1.

Note 1: for decks used as helideck, refer also to [2.4].

Note 2: for exposed decks, refer also to [3.9].

2.3.2 As appropriate according to deck use, operational concentrated loads applied on decks are to be combined with the distributed loads given in Tab 1.

Table 1 : Minimum deck loads

Deck area	Minimum design loads (kPa)
Non loaded decks	2,0
Crew and similar spaces	4,5
Work areas	9,0
Storage areas	minimum 13,0 or ρ H **(1)**
(1) ρ : Cargo specific weight, in kN/m³ If the value of this specific weight is not specified, ρ = 7 is to be taken for calculation H : Storage height, in m.	

2.4 Loads on helidecks

2.4.1 The design of the helideck is to be based on the loads associated with the largest helicopter intended to be used.

2.4.2 The following information concerning the largest helicopter intended to be used are to be supplied and included in the Design Criteria Statement:

- type and maximum takeoff weight Q
- distance between main wheels or skids
- length of skid contact area or distance between main wheels and tail wheel
- print area of wheels
- rotor diameter and overall length measured across main and tail rotors or across main rotors for helicopters with tandem main rotors.

In addition, general arrangement of the helicopter deck is to be provided.

2.4.3 Two design loading cases, at least, are to be considered:

- helicopter stowed
- helicopter hard landing.

Other conditions may be considered as design cases provided they lead to an equivalent degree of safety.

2.4.4 Corresponding loads are to be calculated according to applicable national standards.

2.5 Loads due to operations

2.5.1 For operational equipment liable to induce, when in use, important loads within the structure of the unit, the party applying for classification is to provide, in accordance with Part A, Chapter 1, all necessary information on these loads such as:

- for a drilling rig, loads induced by rig components (derrick, turntable, tensioners, etc.) in the various situations of drilling activities
- for a revolving crane, calculations of loads on crane pedestal during crane operation, and those on pedestal, boom and hook rests, for the stowed situation
- stinger and tensioner loads (pipelaying)
- for the different lifting and handling equipment, the precise indication of the loads they may induce in the structure of the unit (magnitude, direction, footprint, etc.), with their nature (permanent, non permanent, normal, extreme, etc.).

2.5.2 Loads are to adequately include all significant static and dynamic components. The wave-induced motions considered in load evaluation are to be specified.

2.5.3 Unless otherwise documented, the dynamic actions and test loads induced by lifting and handling equipment are to be taken as provided for in:

- NR526 Rules for the Certification of Lifting Applicances onboard Ships and Offshore Units
- NR595 Rules for the Classification of Offshore Handling Systems.

2.6 Hydrostatic loads

2.6.1 The maximum and minimum draughts in each condition of operation are to be considered for calculation of hydrostatic loads on outer shell. If the shell forms tank boundary, the maximum inner pressure or minimum differential inner pressure between internal or external pressure is to be considered as well. Refer also to [3.9].

2.6.2 The panels forming boundaries of ballast, fuel oil and other liquid compartments are to be designed for a liquid specific gravity at least equal to sea water.

Unless adequate means are provided to the satisfaction of the Society, account is not to be taken of counter-pressures from adjoining tanks and compartments. Minimum external counter-pressure may be considered where significant.

2.6.3 Attention is to be paid to the following loading cases:

- static pressure in relation with arrangement of overflow
- dynamic and sloshing pressures occurring in the tanks, in particular where partial fillings are contemplated
- testing condition, as defined in Ch 3, Sec 7
- damaged condition (refer to Article [4]).

2.7 Independent fuel oil tank loads

2.7.1 The provisions of the present requirements apply to fuel oil tanks and bunkers which are not part of the offshore unit structure.

2.7.2 The design of the independent tanks is to be based on an internal load equal to the height of the overflow or air pipe above the top of independent tank.

This internal load above the top of the independent tank is not to be taken less than:

- 3,60 m for fuel oil having a flash point lower than 60°C
- 2,40 m otherwise.

3 Environmental loads

3.1 General

3.1.1 Environmental loads are to be computed on the basis of specified environmental data. Where applicable, Rules prescribed minimum values are to be used.

3.1.2 Action of environment is to be also considered to assess loadings to apply for the overall calculation of the structure of the unit or a part of it and for fatigue analysis.

Action of environment is to be also considered, where relevant, to derive local pressures to be applied to platings and associated framing.

3.2 Evaluation of environmental loads

3.2.1 Environmental loads are to be computed using recognised techniques to the satisfaction of the Society.

3.2.2 Model tests

Design may be based upon model test results. The actual behaviour of the unit is to be adequately simulated. The testing procedures and methods used for the extrapolation to full scale data are to be to the satisfaction of the Society.

3.3 Wave loads

3.3.1 Wave loads are to be computed giving due consideration to the loading regime, according to water depth, wave characteristics and dimensions of the structural members of the unit.

3.3.2 Results derived from tank tests may be used if adequately documented.

3.3.3 For large bodies, the diffraction-radiation theory may be used to evaluate first order wave loads, and, as needed, second order loads.

Due account is to be taken of second order and other non-linear components, when having a significant effect.

3.3.4 Loads on structures made of slender elements may be evaluated using Morison's formula with an appropriate formulation of water particle kinematics.

3.3.5 The Society may require to consider the possibility of wave induced vibration of structural elements.

3.4 Current loads

3.4.1 For drag-dominated structures, the hydrodynamic forces are to be calculated considering the combination of current and wave particle velocity.

Current and wave are generally to be assumed to act simultaneously in the same direction, unless another combination might be more severe and liable to occur.

3.4.2 For large bodies, whenever possible, adequately documented results of tank or wind tunnel model tests are to be used.

3.5 Wind loads

3.5.1 Loads due to wind are to be taken duly into account for exposed structural elements considering, in particular, the influence of their shape and dimensions.

3.5.2 Whenever possible, adequately documented results from wind tunnel tests or data derived from tests are to be used.

3.5.3 Dynamic wind actions are to be considered where the unit's structure, or part of it, may be sensitive to these.

3.6 Inertia loads

3.6.1 The following inertia loads are to be considered:

- loads induced by unit's motions when in floating condition
- loads induced by support motions during dry tow condition, if contemplated
- other dynamic actions where relevant (refer to Part B, Chapter 3).

Note 1: Motion performance as such is not covered by classification. However, an accurate enough motion analysis is to be performed in order to evaluate above loads.

3.6.2 Loads sustained during transit are to be calculated taking into account the transit conditions (environmental data, loading conditions, possible dismantling or fastenings) specified in the Design Criteria Statement.

3.7 Ice and snow

3.7.1 For units intended for service in icy waters, ice loads on hull are to be evaluated with consideration of ice conditions and parameters specified in the Design Criteria Statement (refer to Ch 2, Sec 2, [7]).

Both maximum and cyclic loads are to be considered.

Numerical values for ice pressure are to be determined from recognised formulae and/or model tests in ice tanks. The design loads for level ice are to be taken as the maximum between the following possible ice sheet ruptures: crushing, buckling, bending.

3.7.2 For units intended for service in cold areas, the following loads are to be evaluated on the basis of relevant data:

- gravity loads corresponding to ice and snow accumulation
- gravity loads and increase in wind loads due to ice accretion on open structures, such as derrick, crane booms, etc.

3.7.3 For units not intended to operate in icy waters or cold areas, moderate snow loads may be generally considered in minimum design loads.

3.8 Vortex shedding

3.8.1 The Society may require to consider the possibility of flutter of structural members due to vortex shedding.

3.9 Local pressure on hull and exposed decks

3.9.1 Pressure on hull and exposed decks is to be evaluated from the maximum relative motions between hull and water surface with due allowance for:

- irregularities of actual wave profile
- water run-up along columns or walls
- green waters, etc.

Loads are to be calculated according to recognised standards to satisfaction of the Society.

3.9.2 For exposed decks not submitted to any particular load, a distributed load of 25 kPa is to be taken as a minimum.

3.10 Slamming

3.10.1 General

Slamming loads are to be considered for horizontal members located in the splash zone and for ship-shaped units with particular forward structural configuration. The loads are to be estimated using experimental data or techniques acceptable to the Society.

3.10.2 Surface units

For surface units, where more accurate information is not available, indications provided in Part D, Chapter 1 may be used.

3.10.3 Local loads on superstructure walls and decks

Design pressures induced by wind, water spray and wave action (green waters) on exposed walls and decks of superstructures are to be evaluated taking into account:

- their location, (height above water level, horizontal distance from the unit's sides and/or ends) and orientation
- environmental conditions liable to be met by the unit in various draughts or conditions of operation.

Where appropriate, reference is to be made to Part D, Chapter 1.

4 Accidental loads

4.1 Damaged condition

4.1.1 Hydrostatic pressure acting on hull and subdivision bulkheads and flats is to be evaluated for the unit in damaged condition.

4.1.2 For each item contributing to the watertight integrity of the unit, load height is to be taken as the greatest distance, for all possible damage cases, to the waterline in damaged condition, including wind, if any, as resulting from the application of Part B, Chapter 1.

4.1.3 For surface units, load height is to be taken equal to the vertical distance to the freeboard deck.

4.1.4 As necessary, the inclination of gravity loads from the vertical direction in damaged condition is to be taken into account, considering damage cases and wind resulting from the application of Part B, Chapter 1.

4.2 Loads from towing, mooring and anchoring equipment

4.2.1 For the evaluation of loads applied to fairleads, winches and other towing, mooring and anchoring equipment, the line is to be considered as loaded to its guaranteed breaking strength.

4.3 Impact loads

4.3.1 In application of Ch 2, Sec 1, [4.3], loads induced by collision or dropped objects are to be assessed, based on the kinetic energy of impacting object and on the relevant scheme of energy dissipation.

5 Testing loads

5.1 Tank testing loads

5.1.1 The pressure on walls of watertight and oiltight compartments and members of the structure, during pressure testing of such compartments, is to be taken as per the load heights specified in Ch 3, Sec 7.

5.1.2 The loads induced by testing of equipment such as lifting equipment, davits for life saving appliances, vessels and tanks, and other equipment, are to be duly considered for the design of supports and structure underneath.

Note 1: these testing loads may be, in some cases, much greater than operating loads; typical examples are given by load testing of davits, and hydrostatic testing of large capacities normally filled with gas, or with only a small amount of liquid.

6 Load combinations

6.1 General

6.1.1 The design loads derived from the design data specified by the party applying for classification and entered in the Design Criteria Statement are to be realistically combined to produce the maximum effect upon each component of the structure of the unit.

6.1.2 Load combinations listed in [6.3] are to be considered for each of the conditions of operation corresponding to the structural type and service(s) of the unit.

6.1.3 When a load combination liable to occur within the set of design specifications or at the specified site of operation is not considered for the design of the unit, adequate instructions are to be stated in the Operating Manual and/or appropriate procedures provided to prevent such combination from occurring.

The present requirement particularly relates to the direction of the applied environmental loading (refer to [6.2]) and to the distribution of operational loads (refer to Ch 2, Sec 1, [3.2]).

6.2 Combination of environmental loads

6.2.1 For the purpose of load combinations, the environmental elements (wind, wave and current) are to be assumed to act simultaneously in the same direction, unless combinations of environmental elements with different directions might be more severe and liable to occur.

The most unfavourable direction, or combination of directions, for each component of the structure is to be considered unless specific operational requirements are formulated in accordance with Ch 2, Sec 1, [3.1.2].

Limitations, if any, with respect to waves directions are to be clearly specified.

6.2.2 For each direction, the environmental elements (wind, waves and current) are to be combined with their design values or associated design values.

For wave loads, the most unfavourable combination of wave height, wave period and water level when relevant, is to be retained.

For wind loads, the 1 minute sustained velocity is to be used in combination with other environmental elements for the design of the primary structure of the unit.

6.2.3 Where spectral design procedures are used, wave height and period in [6.2.1] and [6.2.2] relate to the significant height and reference period of sea state, and direction relates to the direction of highest energy density.

Then design loads and stresses are to be taken as the maximum values over a 3 h period.

6.2.4 When this is possible, the extreme environmental loads and stresses may be evaluated through long term statistics, using suitable techniques, to the satisfaction of the Society.

6.3 Load cases for overall strength calculation

6.3.1 The structure of the unit is to be designed for at least the load cases defined in [6.3.2] to [6.3.5]. If necessary, other load conditions that might be more critical are also to be investigated.

6.3.2 Load cases 1 “static” (still water)

These load cases refer to the most unfavourable combinations of the fixed and operational loads.

The most severe arrangement of operational loads, in particular with respect to moving equipment and dynamic operational loads, is to be considered.

For these load cases no environmental load is taken into account.

6.3.3 Load cases 2 “design” (with environment)

These load cases refer to the most unfavourable combinations of the fixed, operational and environmental loads, including:

- the extreme (severe storm) environmental loads with fixed and associated operational loads
- environmental loads specified by the Operating Manual as constituting limits for a condition of operation of the unit or for the operation of a particular equipment or system, with corresponding fixed and operational loads.

6.3.4 Load cases 3 “accidental”

The accidental loads are to be combined with the fixed, operational and associated environmental loads corresponding to the nature of each accidental load.

6.3.5 Load cases 4 “testing”

Testing loads are to be considered for the design of structures being tested and of the structures supporting the items to be tested, and also, as necessary, for design of overall structure.

6.4 Load cases for fatigue evaluation

6.4.1 For fatigue evaluation a sufficient number of load cases is to be considered to correctly model loads acting on the unit during its whole life, giving due consideration to:

- the various conditions of operation of the unit
- the direction and the intensity of environmental actions, as resulting from the long term distributions of relevant environmental parameters with possible limitations corresponding to each of these conditions.

6.5 Local loads

6.5.1 Local loads of different natures are to be combined as relevant. Each combination is to be qualified as “static”, “design”, “accidental” or “testing” according to its contents, on the same principles as detailed in [6.3] for overall loads.

Part B
Structural Safety

CHAPTER 3
STRUCTURE

Section 1 General

1 General

1.1 Application

1.1.1 The present Chapter contains requirements applicable to all offshore units for which the structural type notations and the service notations are defined in Pt A, Ch 1, Sec 2, [4] and Pt A, Ch 1, Sec 2, [5] respectively.

1.2 Construction materials

1.2.1 Provisions of the present Chapter are applicable to structures of units made of steel or other metallic materials.

1.2.2 Concrete structures

For concrete structures of offshore units, reference is to be made to the present Chapter as far as its requirements are applicable and, in addition, to other standards for the design of concrete structures in a marine environment, to the satisfaction of the Society, such as:

- Publication from American Concrete Institute
- ISO 19903 Fixed Concrete Offshore Structures
- Eurocode 2 (EN 1992)
- NS 3473.E (6th edition) Concrete Structures Design and Detailing.

1.3 Foundations of equipment

1.3.1 As a rule, the fixed parts of ancillary structures and equipment and their connections to the hull structure are in the scope of classification, even when the certification of the equipment is not required.

1.3.2 Ancillary structures and equipment are in the scope of classification when specific additional class notations are granted.

Note 1: Any equipment the failure of which could induce major consequences upon the safety of the unit should be covered by classification.

1.3.3 In case of a bolted connection of such equipment to the hull, limit of classification includes the bolted flange on deck (bolts excluded). In case of a welded connection, the exact limit will be defined after special examination by the Society.

Note 1: As a rule, this limit will be taken at the level where cutting would be performed in case of dismantling of the corresponding piece of equipment.

1.3.4 Adequate reinforcements are to be provided in way of the structural foundations of such equipment as:

- machineries
- fairleads, winches and other towing, mooring and anchoring equipment
- equipment corresponding to the particular service of the unit, such as the drilling equipment, crane foundations, and other concentrated loads.

Sufficient strength and stiffness are to be provided in these areas, in order to withstand the loads induced in all the conditions of operation, and avoid vibration that could lead to damage of the structure.

The foundations of lifting appliances are to comply with the applicable requirements of Ship Rules, Pt E, Ch 8, Sec 4.

2 Structural arrangement

2.1 General

2.1.1 The structural arrangement is to be compatible with the design, construction, operation and in-service inspection or maintenance of the unit. The arrangement is not to lead to unduly complicated design or fabrication procedures.

2.1.2 In compliance with provisions of Part A, Chapter 1, if the Builder contemplates construction procedures liable to affect the design strength of the unit (for instance by prestressing some areas), he is to provide the Society with all necessary additional information.

2.1.3 The structural arrangement is to ensure the possibility of adequate inspection during the construction phase as well as during the service life of the unit. Adequate markings and access are to be provided in particular for structural sensitive areas. Where the present requirement cannot be adequately achieved, alternative means (such as leakage detection) and/or additional strength are to be provided in agreement with the Society.

2.1.4 The structural arrangement is to take into account the possibility of accidental situations resulting from accidental loads or unexpected structural failure. In this respect, due consideration is to be given to subdivision, to accidental loadings defined in Part B, Chapter 2 and to the capability of the structure to provide for load redistribution.

3 Subdivision

3.1 Watertight subdivision

3.1.1 On all units, arrangement of watertight bulkheads and decks is to comply with the applicable requirements of Part B, Chapter 1.

3.1.2 On surface units, watertight transverse bulkheads are furthermore to comply with the applicable requirements of Part D, Chapter 1.

3.2 Wash bulkheads

3.2.1 The present requirement concerns ballast compartments, oil fuel bunkers and, generally, holds intended to carry liquids in any quantity of density less or equal to 1,025 t/m².

3.2.2 A transverse wash bulkhead is to be provided in compartments mentioned in [3.2.1], when:

- fillings between 0,50 H and 0,90 H are contemplated during service, and
- $\ell_c > 10$ where $L < 100$, or

  $\ell_c > 0{,}1\ L$ where $L \geq 100$, and
- $T_t < \sqrt{\dfrac{1{,}58\,\ell_c}{0{,}5 + 0{,}7\dfrac{H}{\ell_c}}}$

  in this last formula, the denominator is not to be taken greater than 1

where:

H : Depth of the tank, in m

ℓ_c : Length of the tank, in m

T_t : Minimum pitching period of the unit, in s; lacking more precise information, the value $T_t = L/19$, without being less than 6, is to be taken, L being the length of the unit.

This transverse wash bulkhead, where required, is to fulfil the following conditions:

- location about midway between watertight bulkheads
- $\alpha < 0{,}70$

where:

α : Ratio of the lightening holes sectional area to the total sectional area of the bulkhead.

3.2.3 A longitudinal wash bulkhead is to be provided in compartments mentioned in [3.2.1], when:

- fillings between 0,50 H and 0,90 H are contemplated during service, and
- $b > 21{,}5$

where:

b : Breadth of the tank, in m, measured at 0,8 H above its bottom

H : As defined in [3.2.2].

This longitudinal wash bulkhead, where required, is to fulfil the following conditions:

- location on the centre line of the tank
- $\alpha \leq 0{,}70$

where:

α : As defined in [3.2.2].

This wash bulkhead may be not required, where the hold or bunker includes sloping topside tanks extending down to 0,20 H at least from the tank top.

3.3 Cofferdam arrangement

3.3.1 Cofferdams are to be provided between:

- fuel oil tanks and lubricating oil tanks

- compartments intended for liquid hydrocarbons (fuel oil, lubricating oil) and compartments intended for fresh water (drinking water, water for propelling machinery and boilers)
- compartments intended for liquid hydrocarbons (fuel oil, lubricating oil) and tanks intended for the carriage of liquid foam for fire extinguishing.

3.3.2 Cofferdams separating:

- fuel oil tanks from lubricating oil tanks
- lubricating oil tanks from compartments intended for fresh water or boiler feed water
- lubricating oil tanks from those intended for the carriage of liquid foam for fire extinguishing

may not be required when deemed impracticable or unreasonable by the Society in relation to the characteristics and dimensions of the spaces containing such tanks, provided that:

- the thickness of common boundary plates of adjacent tanks is increased, with respect to the rule required thickness, by 2 mm in the case of tanks carrying fresh water or boiler feed water, and by 1 mm in all other cases
- the sum of the throats of the weld fillets at the edges of these plates is not less than the thickness of the plates themselves
- the structural test is carried out with a head increased by 1 m with respect to Ch 3, Sec 7.

3.3.3 Spaces intended for the carriage of flammable liquids are to be separated from accommodation and service spaces by means of a cofferdam. Where accommodation and service spaces are arranged immediately above such spaces, the cofferdam may be omitted only where the deck is not provided with access openings and is coated with a layer of material recognized as suitable by the Society.

The cofferdam may also be omitted where such spaces are adjacent to a passageway, subject to the conditions stated in [3.3.2] for fuel oil or lubricating oil tanks.

3.4 Fuel oil tank arrangement

3.4.1 The arrangements for the storage, distribution and utilisation of the fuel oil are to be such as to ensure the safety of the unit and persons on board.

3.4.2 As far as practicable, fuel oil tanks are to be part of the unit's structure and are to be located outside machinery spaces of category A.

Where fuel oil tanks (other than double bottom tanks, if any) are necessarily located adjacent to or within machinery spaces of category A, at least one of their vertical sides is to be contiguous to the machinery space boundaries (they are preferably to have a common boundary with the double bottom tanks, if any) and the area of the tank boundary common with the machinery spaces is to be kept to a minimum.

Where such tanks are situated within the boundaries of machinery spaces of category A, they may not contain fuel oil having a flashpoint of less than 60°C.

3.4.3 Fuel oil tanks may not be located where spillage or leakage therefrom can constitute a hazard by falling on heated surfaces.

Precautions are to be taken to prevent any oil that may escape under pressure from any pump, filter or heater from coming into contact with heated surfaces.

Fuel oil tanks in boiler spaces may not be located immediately above the boilers or in areas subjected to high temperatures, unless special arrangements are provided in agreement with the Society.

3.4.4 Where a compartment intended for goods is situated in proximity of a heated liquid container, suitable thermal insulation is to be provided.

4 Access

4.1 Means of access

4.1.1 Each space within the unit is to be provided with at least one permanent means of access to enable, throughout the life of the unit, overall and close-up inspections and thickness measurements.

4.1.2 For the access to horizontal openings, hatches or manholes, the dimensions are to be sufficient to allow a person wearing a self-contained air-breathing apparatus and protective equipment to ascend or descend any ladder without obstruction and also to provide a clear opening to facilitate the hoisting of an injured person from the bottom of a confined space. The minimum clear opening is not to be less than 600 x 600 mm. When access to a hold is arranged through a flush manhole in the deck or a hatch, the top of the ladder is to be placed as close as possible to the deck or the hatch coaming. Access hatch coamings having a height greater than 900 mm are to be provided with steps on the outside in conjunction with the ladder.

4.1.3 For access to vertical openings or manholes in swash bulkheads, floors, girders and web frames providing passage through the length and breath of the space, the minimum opening is to be not less than 600 x 800 mm at a height not more than 600 mm from the bottom shell plate unless gratings or other footholds are provided.

4.1.4 Technical provisions of IMO Resolution MSC.158(78) and IACS UI MODU1, as amended, may be used as a reference for the design and arrangement of means of access.

4.1.5 Where a permanent means of access may be susceptible to damage during normal operations or where it is impracticable to fit permanent means of access, the Society may accept, on a case-by-case basis, the provision of movable or portable means of access, provided that the means of attaching, rigging, suspending or supporting the portable means of access forms a permanent part of the unit's structure. All portable equipment is to be capable of being readily erected or deployed by unit's personnel.

4.1.6 Equipment on deck is to be arranged such as to allow inspections of deck plating and to avoid permanent concentration of dust, mud and remaining water.

4.2 Access to holds, tanks, ballast tanks and other spaces

4.2.1 Safe access is defined in accordance with IMO Resolution A.864(20) Recommendations for entering enclosed spaces aboard ships.

4.2.2 Safe access to holds, cofferdams, tanks and other spaces are to be direct from the deck and such as to ensure their complete inspection. Safe access may be from a machinery space, pump room, deep cofferdam, pipe tunnel, hold, double-hull space or similar compartment not intended for the carriage of oil or hazardous materials, where it is impracticable to provide such access from an open deck.

4.2.3 Tanks or subdivisions of tanks having a length of 35 m or more are to be fitted with two access hatchways and ladders.

Tanks less than 35 m in length are to be served with at least one hatchway and ladder. When a tank is subdivided by one or more swash bulkheads or other obstructions which do not allow ready means of access, at least two hatchways and ladders are to be fitted.

When two hatchways are fitted, they are to be placed as far apart as practicable.

4.2.4 Each hold are to be provided with at least two means of access. Generally, these accesses are arranged diagonally.

4.2.5 In general, when two means of access are fitted, they are to be arranged as far apart as practicable.

4.3 Access manual

4.3.1 An access manual is to be incorporated in the operating manual of the unit. The access manual is to describe unit's means of access to carry out overall and close-up inspections and thickness measurements.

4.3.2 The access manual is to be updated as necessary, and an up-dated copy is to be maintained onboard.

4.3.3 The access manual is to include, for each space, the following information:

- plans showing the means of access to the space, with appropriate technical specifications and dimensions
- plans showing the means of access within each space to enable an overall inspection to be carried out, with appropriate technical specifications and dimensions; the plans are to indicate from where each area in the space can be inspected
- plans showing the means of access within each space to enable close-up inspection to be carried out, with appropriate technical specifications and dimensions; the plans are to indicate the position of structural critical areas, whether the means of access are permanent or portable and from where each area can be inspected

Note 1: Critical structural areas are locations identified from calculations to require monitoring, or, from the service history of similar or sister units, to be sensitive to cracking, buckling, deformation or corrosion which would impair the structural integrity of the unit.

- instructions for inspecting and maintaining the structural strength of all means of access and means of attachment, taking into account any corrosive atmosphere that may be within the space
- instructions for safety guidance when rafting is used for close-up inspections and thickness measurements
- instructions for the rigging and use of any portable means of access in a safe manner
- an inventory of all portable means of access
- records of periodical inspections and maintenance of the unit's means of access.

5 In-water surveys

5.1 General

5.1.1 When the additional class notation **INWATERSURVEY** is granted to the units, special constructional features are to be provided as defined in Pt A, Ch 2, Sec 8, [2.2].

Section 2 Structural Steels

1 General

1.1 Scope

1.1.1 The present Section defines the requirements governing the selection of structural steels.

1.1.2 At the very beginning of the project, the Society is to be informed of the materials intended to be used so that their characteristics, testing and manufacturing conditions may be examined.

1.1.3 The requirements of the present Section are formulated particularly for steels and products meeting the applicable requirements of NR216 Rules on Materials and Welding. for the Classification of Ships and Offshore Units.

Steels and products manufactured to other specifications may be accepted in specific cases provided that such specifications give reasonable equivalence to the requirements of these Rules.

1.1.4 The present Section is applicable to typical constructions and the Surveyor, where appropriate, may call for additional requirements to meet the intent of the Rules.

1.2 Steel selection parameters

1.2.1 The selected steels are to have mechanical properties satisfying the structural design of the unit and the requirements of this Section.

1.2.2 The steel grade for a structural element is to be selected in accordance with Article [3] on the basis of the:

- design service temperature defined in Ch 2, Sec 2, [6]
- structural category set out in Article [2]
- reference thickness of the element.

1.2.3 The reference thickness of the element to be considered in the steel selection diagrams depends on the type of material used:

- for flat products (plates and wide flats) and for tubulars, the reference thickness is the material thickness
- for sections, the reference thickness is the flange thickness
- for the steel forgings and castings, the reference thickness is to be previously determined in agreement with the Society (it is generally the average largest representative thickness).

Note 1: The reference thickness relates to the as-built thickness including any corrosion allowance.

2 Structural categories

2.1 Categories to be considered

2.1.1 Structural elements in welded steel constructions are classed into three categories: second, first and special categories as listed:

- Second category:
  Second category elements are structural elements of minor importance, the failure of which might induce only localised effects.
- First category:
  First category elements are main load carrying elements essential to the overall structural integrity of the unit.
- Special category:
  Special category elements are parts of first category elements located in way or at the vicinity of critical load transmission areas and of stress concentration locations.

2.2 Design drawings

2.2.1 Structural categories are to be indicated on the design drawings submitted to the Society for approval.

2.3 Classification of elements

2.3.1 Guidance is provided for classification of elements into categories, according their nature and to the structural type of unit, in NR426 Construction Survey of Steel Structures of Offshore Units and Installations.

Nevertheless, the Society may, where deemed necessary, upgrade any structural element to account for particular considerations such as novel design features or restrictions regarding access for quality control and in-service inspections.

3 Toughness requirements

3.1 General

3.1.1 Steel toughness requirements are based on Charpy V-notch (KV) impact testing.

Reference is made to NR216 for the testing procedure.

3.1.2 Additional tests, such as crack tip opening displacement testing (CTOD) may be requested as complementary investigation.

3.1.3 The toughness requirements herein further assume that, during the fabrication process:

a) steel is not cold worked to a forming strain in excess of 5%, or

b) in such a case, a heat treatment is performed (unless otherwise demonstrated to be unnecessary)

c) normalised steel is not heated to a temperature exceeding 650°C, or any other value specified by the steel maker, whichever is less.

3.1.4 The Society reserves the right to upgrade toughness requirements herein when any of the above conditions is not met or for any particular manufacturing or construction process.

3.2 Charpy V-notch impact properties

3.2.1 The Charpy V-notch impact requirements for rolled products in normal, higher strength structural steels and high strength quenched and tempered steels are given in NR216, Chapter 3.

The Charpy V-notch impact requirements for steel forgings and castings are given in NR216, Chapter 5 and NR216, Chapter 6.

3.2.2 Transverse Charpy V-notch impact tests are required for rolled products in accordance with Tab 1.

3.2.3 Where no fatigue occurs on the structure and in case of low service stresses, some limited increase in the temperatures of the KV test may be accepted after examination by the Society of a documented request.

Table 1 : Requirements for transverse Charpy V-notch impact tests

Steel type	Structural category	Thickness range	Type of KV tests
R_{eH} < 420 N/mm²	All	t ≤ 49 mm	KVL or KVT
		t > 49 mm	KVT
420 N/mm² ≤ R_{eH} ≤ 690 N/mm²	Special and first	all t	KVT

Note 1:
R_{eH} : Minimum specified yield strength of the steel, in N/mm²
KVL : Charpy V-notch impact tests with specimens taken in longitudinal direction (refer to NR216, Ch 2, Sec 4)
KVT : Charpy V-notch impact tests with specimens taken in transverse direction (refer to NR216, Ch 2, Sec 4).

3.3 Selection of grades for weldable normal and higher strength steels

3.3.1 Fig 1 to Fig 3 provide the required selection criteria for each of the three structural categories.

Note 1: If the categories are not yet defined at the time of procurement, Fig 1 (special category) may be used for all structural steels.

3.3.2 Fig 1 to Fig 3 are applicable to non-alloyed, micro-alloyed or low-alloyed carbon-manganese steels only with minimum specified yield strength R_{eH} lower than or equal to 420 N/mm².

These general diagrams are applicable to rolled plates and sections, as well as welded and seamless tubes with R_{eH} < 420 N/mm².

These diagrams concern the Charpy V-notch impact test only. For requirements concerning other characteristics, refer to NR216.

3.3.3 Normal and higher strength hull structural steel grades A to FH in accordance with the requirements of NR216 are generally suitable for most applications requiring minimum specified yield strength R_{eH} lower than or equal to 420 N/mm², as shown on Fig 1 to Fig 3.

3.3.4 On Fig 1 to Fig 3, the temperature of the impact test (T_{KV}) or the required steel grade for a structural element is given as a function of the design temperature T_D and of the thickness of the element.

3.3.5 For important tonnage of steel, an interpolation in Fig 1 to Fig 3 may be authorised, upon request, by the Society. In such a case, the temperature T_{KV} may be obtained by interpolation between temperature T_{KV} at the lower and higher limits of the relevant zone of the diagram, for the same thickness.

Note 1: For the same example as in Note 1 of Fig 2, the value of T_{KV} obtained by interpolation between T_{KV} = –20°C and T_{KV} = –30°C is: T_{KV} = –23°C.

3.3.6 The grade selection curves on Fig 1 to Fig 3, are based on the following publications:

- IACS Recommendation No. 11 Material Selection Guideline for Mobile Offshore Drilling Units
- Sanz G., 1981. Proposal of a quantitative method for the choice of steel qualities with regards to the risk of brittle fracture, Normes et techniques - AFNOR, IRSID
- Charleux J., 1981. Selection of steel qualities for welded structural elements, SNAME / Artic Section inaugural session, Calgary (Canada). Dec 16.

3.4 Selection of grades for steel forgings and castings

3.4.1 Fig 1 to Fig 3 provide the required selection criteria for steel forgings and castings.
Any deviation from the above requirement is to be submitted to the Society for approval.

3.4.2 These diagrams concern the Charpy V-notch impact test temperature only. For requirements concerning other characteristics, refer to NR216, Ch 5, Sec 2 and NR216, Ch 6, Sec 2.

3.4.3 Requirements for carbon and carbon-manganese steel forgings intended for non-welded components are given in NR216, Ch 5, Sec 3.

Figure 1 : Steel selection for special category elements as welded, without stress-relieving heat treatment after welding

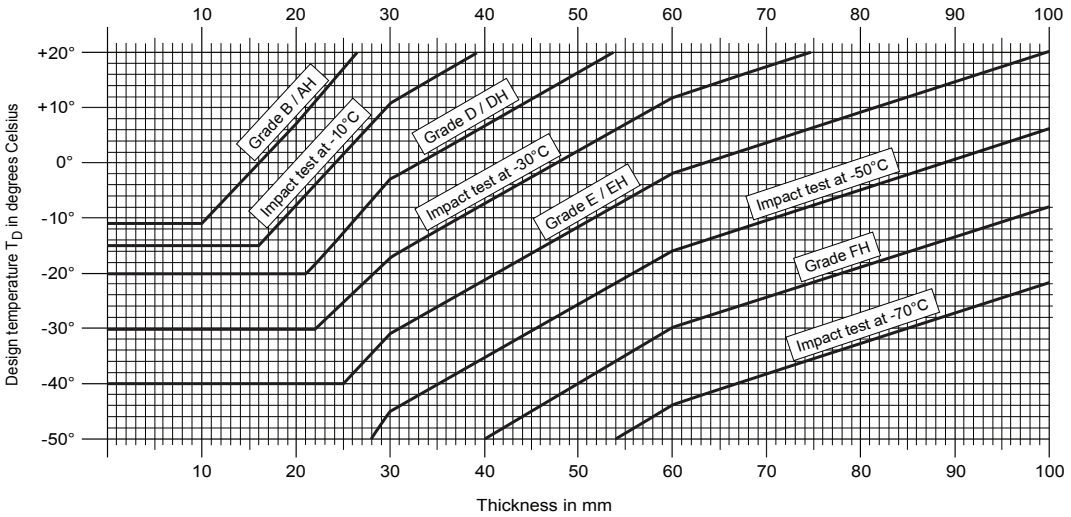

Note 1:

- Valid for steels with minimum specified yield strength R_{eH} lower than or equal to 420 N/mm^2.
- For Charpy V-notch values, refer to [3.2].
- (T) means tested in transverse direction for rolled products, refer to [3.2].

Figure 2 : Steel selection for first category elements as welded without stress-relieving heat treatment after welding or for special category elements with stress-relieving heat treatment after welding

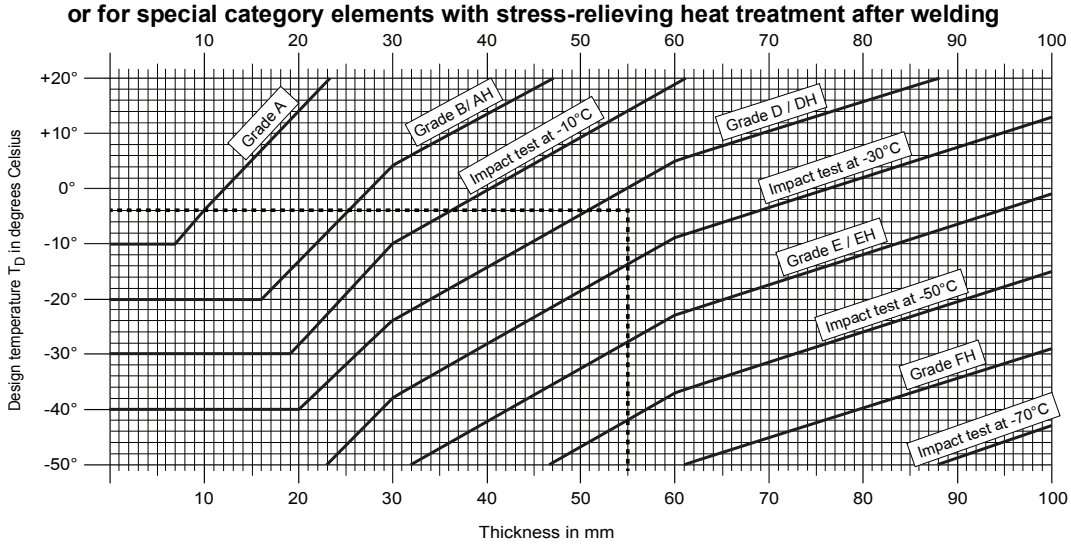

Note 1: Example of selection: T_d = –4°C ; thickness = 55 mm
Steel grade is to be Charpy V-notch impact tested at –30°C. Steel grade E or EH being impact tested at –40°C can be selected.

Figure 3 : Steel selection for second category elements with or without stress-relieving treatment after welding or first category elements with stress-relieving heat treatment after welding

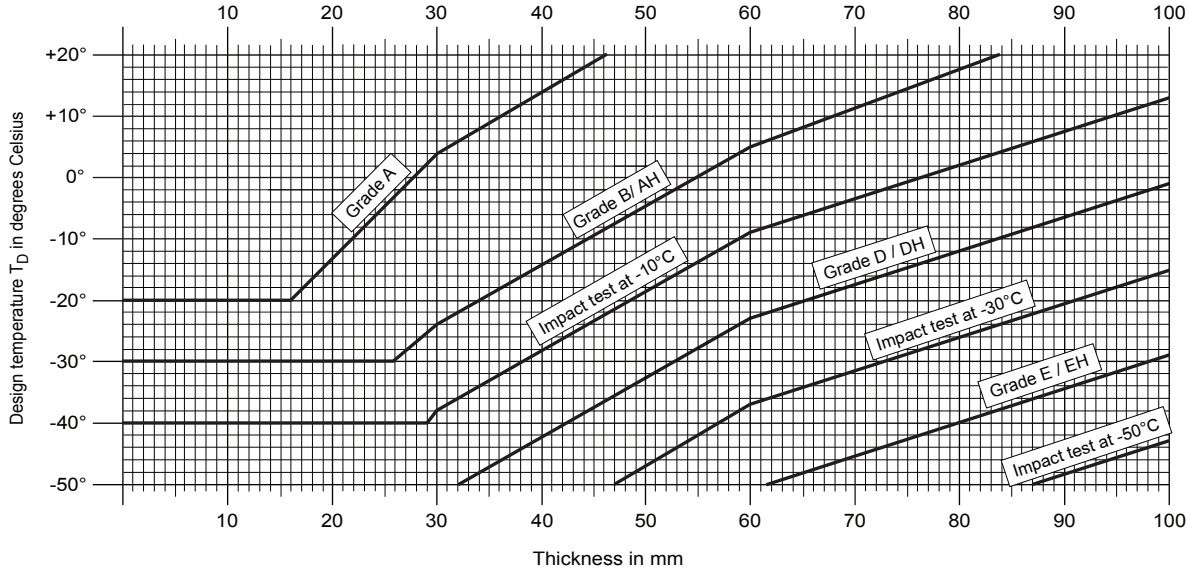

3.5 Selection of grades for high strength quenched and tempered steels

3.5.1 Fig 4 to Fig 6 provide the required selection criteria for each of the three structural categories.

3.5.2 Fig 4 to Fig 6 are applicable to weldable high strength quenched and tempered steels with minimum yield strength R_{eH} within the range of 420 N/mm² to 690 N/mm² as defined in NR216, Ch 3, Sec 3.

3.5.3 The requirements apply to carbon-manganese and low alloyed steels.

The steels are classed into six groups indicated by minimum yield strength R_{eH} (N/mm²) 420, 460, 500, 550, 620 and 690.

Each group is further subdivided into four grades A, D, E and F based on the impact test temperature, as defined in NR216, Ch 3, Sec 3.

The letters A, D, E and F mean impact test at 0, –20, –40 and –60°C, respectively.

Figure 4 : Steel selection for special category high strength quenched and tempered elements

Special category

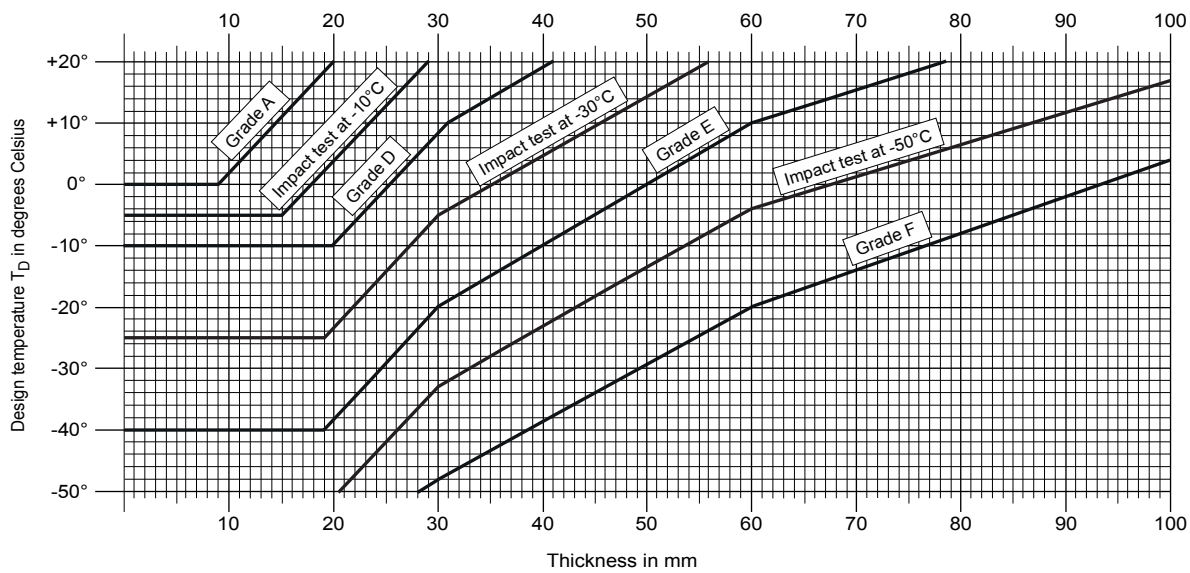

Figure 5 : Steel selection for first category high strength quenched and tempered elements

1st category

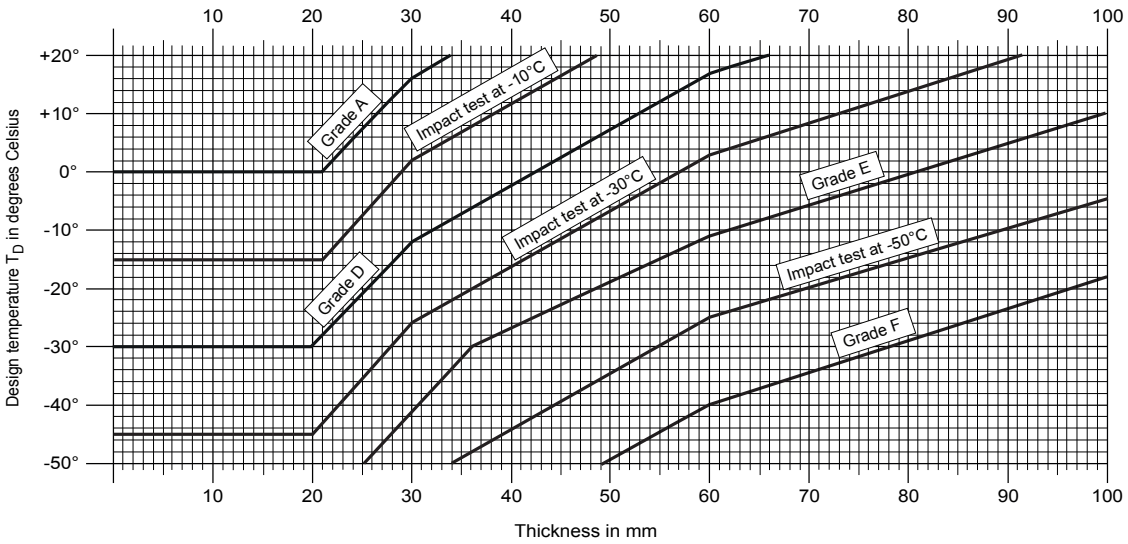

Figure 6 : Steel selection for second category high strength quenched and tempered elements

2nd category

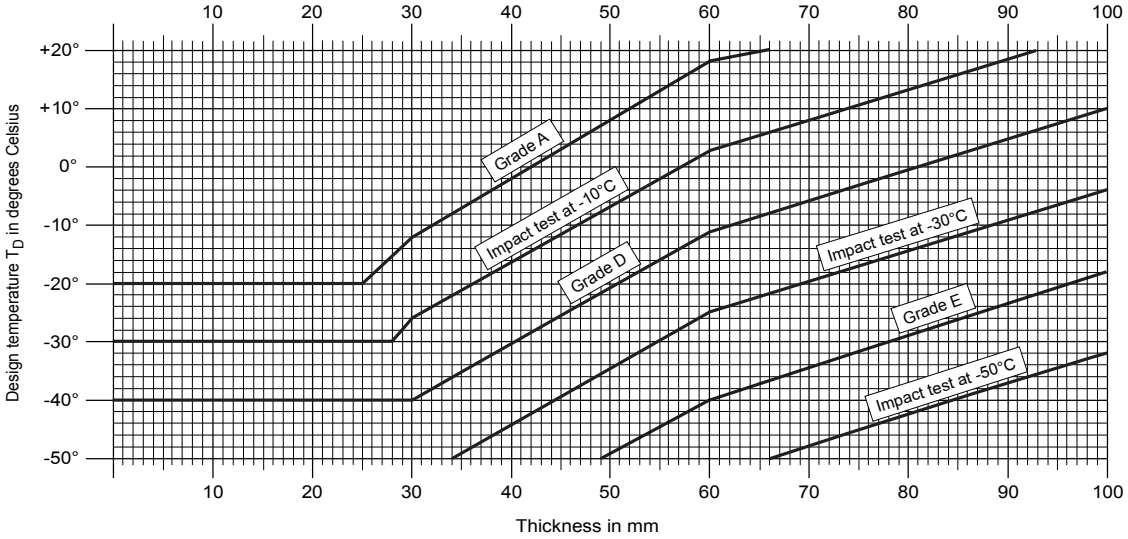

4 Through-thickness ductility

4.1 Steels with specified through-thickness properties

4.1.1 The designer is to evaluate the risk of lamellar tearing, which is dependent on multiple parameters like shrinkage stresses during cooling due to assembly stiffness, clamping of the structure close to the joint, material thickness, material inclusions level, distribution and size of weld runs.

4.1.2 Where normal tensile loads induce out-of-plane stress greater than $0,5R_{eH}$ in steel plates:

- for plates with $t < 15$ mm:

  ultrasonic testing is to be performed
- for plates with $t \geq 15$ mm:

  Z-quality steel is to be used or ultrasonic testing is to be performed in order to prevent laminar tearing.

Ultrasonic testing of the plate on which the weld is to be deposited is to be carried out before and after welding along a strip of 100 mm in width centred on the weld axis to detect any possible lamination of the plate located below the weld.

4.2 Use of Z plates

4.2.1 Where, as a result of service or residual stresses, tensile loads are induced normal to the steel plates, the use of Z steel plates is to be specified and adequate structural detail design and special welding techniques may need to be implemented to minimise through thickness loads and weld shrinkage strains.

Note 1: Tensile loads induced normal to the steel plates can happen in the following cases: e.g. intersection of tubular elements with large fillet or full penetration welds, or cruciform type joints of heavy elements, or connections of the flange type, or reinforcements of cut-outs and penetrations in way of structural elements subject to large tensile stresses.

4.3 Selection of type of Z grade

4.3.1 The requirements for Z grade are given in NR216, Ch 3, Sec 11.

4.3.2 The type of Z grade (Z25 or Z35) is to be determined with respect to the following factors:

- structural category of joint
- level of anticipated tensile stress
- geometric configuration and weld parameters.

Note 1: In general, Z 25 grade can be used in most restraint welding situations. For applications involving special category connections of elements subject to large service tensile stresses with thickness exceeding 40 mm, Z 35 grade is to be considered.

Section 3 Structure Strength Requirements

1 General

1.1 Application

1.1.1 The present Section is applicable to all structures of offshore units constructed of steel or other metallic material and of any structural type other than surface-type.

For surface units, self-elevating units and column stabilized units, Ch 3, Sec 8 is also applicable.

1.1.2 Strength requirements herein formulated are to be considered together with:

- loading conditions defined in Part B, Chapter 2
- construction with materials properties and workmanship defined in Ch 3, Sec 2 and Ch 3, Sec 6
- testing according to provisions of Ch 3, Sec 7
- particular requirements of Ch 3, Sec 8.

1.2 Principles

1.2.1 The structure is to have adequate strength to resist overall and local failure of its components. Relevant modes of failure to be considered include excessive deformations and yielding, general and local instability, fatigue, brittle failure, corrosion damage and occurrence of excessive vibrations.

1.2.2 The design of primary structural elements is to take into account the design life of the unit and for all of its conditions of operation. The design life of the structure is to be specified by the party applying for classification. It is normally to be taken not less than 20 years.

The design life of the structure is to be indicated in the Design Criteria Statement.

1.3 Design format

1.3.1 The deterministic linear design format or allowable stresses format is used to formulate the strength criteria of the present Rules.

1.3.2 Other design formats may be used if duly justified and adequately documented to the satisfaction of the Society.

The Owner's agreement may be required in cases where the Society deems it appropriate.

1.3.3 The limit state (load and resistance factor) design format may be used, in lieu of the format of the present Rules, if supported by suitable calibration for same type of structure and same type of climate, demonstrating that proposed load and resistance factors result in a level of safety equivalent to that afforded by the direct use of the Rules requirements, to the satisfaction of the Society.

Note 1: Attention is drawn that partial load factors may be not applicable to loads which are not independent; In such case, only a global load factor can be used.

1.3.4 The strength criteria of the present Rules take into account factors such as non-linearities, initial imperfections, residual stresses, etc., to the extent typically encountered. Their use then requires compliance with the Rules materials and workmanship requirements.

1.4 Corrosion allowances

1.4.1 The strength criteria of the present Rules also take into account a moderate and progressive corrosion, up to an amount of 4% in 20 years, except otherwise specified by applicable rules.

Any additional corrosion allowance, as may be provided in accordance with the provisions of Ch 3, Sec 5, is to be deduced from actual nominal thicknesses prior to application of strength criteria.

1.4.2 When the unit is converted from an existing unit, the assessment of strength is to be based on actual measured thicknesses reduced by any specified corrosion prediction or corrosion allowance. For a ship conversion into an offshore surface unit or redeployment of an offshore surface unit, the Guidance Note NI593 may be applied.

1.5 Plastic design

1.5.1 The strength criteria of the present Rules are based on loads and stresses being determined by elastic analysis, except where otherwise stated in Articles [4] and [5].

1.5.2 Plastic analysis may be used subject to a satisfactory demonstration of the following:

- other modes of failure such as elastic buckling are not liable to occur
- the postulated collapse mechanism (number and location of plastic hinges) results in the smallest ultimate load
- incremental collapse is not liable to occur under progressive and alternating loads (shakedown effect).

Note 1: Attention is to be paid to possible effects, under dynamic loads, of the changes in stiffness of members subject to plastic strains.

2 Materials

2.1 General

2.1.1 Materials including fabrication consumables are to be specified in order to present at least the strength properties considered in the design with due allowance for the service and fabrication requirements.

2.1.2 Structural steels are to be in accordance with the requirements of Ch 3, Sec 2, in particular with respect to brittle failure. Alternative criteria based upon fracture mechanics testing may be accepted by the Society after consideration on a case by case basis.

2.2 Use of high strength steels

2.2.1 Where higher strength steel is used, special care is to be exercised in detail design to ensure an adequate high cycle structural behaviour.

2.2.2 As a general rule, ordinary stiffeners welded on a plate and contributing to the overall strength of the unit are to be in a steel having the same reference stress than the corresponding plate.

As a general rule, connections are to be made of a steel having the same reference stress than the connected elements.

2.2.3 When high strength steel is used in some members or areas of the structure, and a lower strength steel is used in adjacent parts, attention is to be given to avoid a weak zone at transition.

For surface units only, extent of use of high strength steel, if used for hull, bottom and deck, is to comply with the relevant requirements of the Ship Rules.

2.3 Other materials

2.3.1 Metallic materials, other than steel, are to be of a type suitable for use in a marine environment, and are to be specified following recognised standards. Reference may be made also to other Rules and Guidance Notes published by the Society.

3 Overall strength

3.1 General

3.1.1 The loads and stresses in the overall structure are to be determined by an overall analysis of the structure.

3.1.2 The use of a particular method of structural analysis is not required provided that the selected methodology is appropriate to the nature of the loads, the geometry, the mode of operation (bottom-supported or floating) of the unit and to the nature of the response of the structure.

3.1.3 The party applying for classification is to demonstrate that recognised techniques are used consistently and result in the Rule prescribed level of structural safety.

3.1.4 Same provisions generally apply to overall fatigue analysis and to analysis of any specific part of the structure.

3.2 Structural analysis

3.2.1 The structural modelling is to take satisfactorily into account the geometric and mechanical properties of the unit, the distribution of inertia and the boundary conditions.

3.2.2 The method of analysis is to take adequately into account the nature of loads and load application, in particular:

a) The dynamic effects, where significant, are to be considered in the analysis.

b) Possible resonances of environmental loads with the structure are to be adequately investigated. Both full dynamic analysis and simplified methods may be used, provided that the computation assumptions, parameters and procedures can be realistically substantiated.

c) Non-linearities, e.g. due to loads, geometry or materials, are to be considered where significant.

3.2.3 The structural response of the unit is to be, at least, determined for the combined load cases defined in Part B, Chapter 2, taking into account specific requirements of Ch 3, Sec 8 applicable to particular structural types of units.

The verifications of the strength and stability of the structure are to be performed in accordance with the provisions of Article [4].

4 Local strength

4.1 General

4.1.1 The local strength of the structure is to be assessed using loads calculated according to Part B, Chapter 2, subject to particular requirements of Ch 3, Sec 8.

4.1.2 The local strength of the structure is to be assessed according to methods, codes or standards recognised to the satisfaction of the Society.

4.1.3 Stresses in the elements of the structure may be classed into three categories, each of these being usually obtained by separate calculation:

- overall stresses, resulting from the overall loading of the main structure
- grillage stresses, which are the stresses resulting from loads applied to girders and stiffeners
- plate bending stresses, which are the stresses in plates resulting from local pressure loadings.

4.1.4 Overall and grillage stresses are to be combined as relevant.

Resulting stresses are to satisfy the allowable stresses criteria specified in Article [5], and the buckling strength criteria specified in Article [6].

As necessary, fatigue evaluations, as provided for in Article [7], are to be carried out.

4.1.5 Strength of plating under pressure loads is to be separately evaluated, using recognised codes or standards to the satisfaction of the Society.

4.1.6 Strength of lattice type structures is to be assessed using codes or standards recognised by the Society, such as American Institute of Steel Construction - Specification for Structural Steel for Buildings (AISC).

4.1.7 For tubular members, the stresses due to circumferential loading are to be combined with the overall stresses to determine the total stress levels.

4.1.8 When the shear stress in girder webs or bulkheads is calculated through simplified methods, only the effective shear area of the web is to be considered. In this regard, the total depth of the girder is to be taken as the depth of the web or bulkhead.

4.1.9 In accordance with [1.5], plastic design may be considered for local design of elements not contributing to the overall strength of the unit and subject to occasional loading, when energy absorption is a primary concern in the design.

4.1.10 The local strength of the independent fuel oil tank is to be assessed using local loads calculated according to Ch 2, Sec 3, [2.7].

4.2 Detailing

4.2.1 Due attention is to be paid to the quality of detail design which is to be performed according to sound engineering practices corresponding to the present state-of-the-art.

4.2.2 Structural connections are to be adequately designed to ensure, as direct as possible, stress transmission avoiding eccentricity of joints.

4.2.3 Stress raisers, notches and local stress concentrations are to be kept to a minimum.

4.2.4 Detail design of highly stressed areas is to take duly into account the residual restraint stresses that may result from fabrication process.

Due precautions are to be given to avoid constraint triaxiality.

4.2.5 The possibility of lamellar tearing is to be minimised, where practicable, by avoiding the transmission of tensile loads through the thickness of plate. Where required, plate materials are to be specified with the through thickness properties prescribed in Ch 3, Sec 2, [4].

4.2.6 The compatibility between design, manufacture and construction is to be ascertained having due regard to practical fabrication techniques and available materials. Where necessary, tolerances are to be clearly stated on detail design drawings.

5 Allowable stresses

5.1 General

5.1.1 The present Article specifies the allowable stress criteria, with respect to yielding or breaking of the elements of structure.

For particular calculations or loading cases, the values of the allowable stresses are to be given specific consideration by the Society.

5.2 Material strength

5.2.1 The reference stress of material, R_f, is defined by:

$$R_f = \min\left(R_e, \frac{R_m}{1,2}\right)$$

where:

R_e : Minimum specified yield stress of the material

R_m : Specified minimum tensile strength of the material.

5.2.2 For hull steels, as defined in NR216, R_f is equal to the minimum specified yield strength of steel.

5.2.3 For light alloy materials (aluminium), when used in non-welded constructions, R_f is to be defined taking into account the material properties in the specified condition of delivery. For welded aluminium, R_f is to be taken based on R_e in the annealed condition (refer to NR216).

5.3 Equivalent stresses

5.3.1 For uniaxial stress condition (e.g. obtained by beam calculation), the equivalent stress σ_c, at each point, is given by:

$$\sigma_c = \sqrt{\sigma^2 + 3\tau^2}$$

where:

σ : Normal stress

t : Shear stress.

Above stresses are the result of the addition of overall stresses and grillage stresses, as defined in [4.1.3].

5.3.2 For biaxial stress condition (e.g. obtained by finite element calculation with plate elements), the equivalent stress, at each point, is given by:

- when $\sigma_1 \cdot \sigma_2 > 0$:

  $\sigma_c = \max(|\sigma_1|, |\sigma_2|)$
- when $\sigma_1 \cdot \sigma_2 < 0$:

  $$\sigma_c = \sqrt{\sigma_1^2 + \sigma_2^2 + |\sigma_1 \sigma_2|}$$

where

σ_1, σ_2 : Principal stresses in the element under study, including the effects of both overall and local loads.

5.4 Criteria

5.4.1 The equivalent stress is not to exceed the allowable stress σ_a, for the loading condition considered, according to the following formula:

$$\sigma_c \le \sigma_a$$

where:

σ_a : Allowable stress, given by: $\sigma_a = 1,1\ \alpha\ R_f$

α : Basic allowable stress factor defined in [5.4.2].

5.4.2 The basic allowable stress factor α is to be taken as follows:

a) In general:
   - for load case 1 (“static”):

     $\alpha = 0,6$
   - for load case 2 (“design”):

     $\alpha = 0,8$
   - for load case 3 (“accidental”):

     $\alpha = 1,0$

   with the load cases 1, 2 and 3 as defined in Ch 2, Sec 3, [6.3].

b) For specific calculations:
   - for load case 4 (“testing”):

     $\alpha = 0,9$ with the load case 4 as defined in Ch 2, Sec 3, [6.3]
   - for wash bulkheads:

     $\alpha = 0,9$

- for foundation of towing, mooring and anchoring equipment:
  $\alpha = 1,0$ with the design loads defined in Ch 2, Sec 3, [4.2]
- for outer shell and subdivision bulkheads and decks in damaged condition:
  $\alpha = 1,0$
- for the foundations of offshore handling systems (e.g. winches, sheaves, chain jacks, strand jacks, etc.) used for risers and mooring lines installation, reference is made to NR595 Classification of Offshore Handling Systems.

5.4.3 When the stresses are obtained through a fine mesh Finite Element Model, the Society may give consideration to small hot spot areas not satisfying above stress criteria, providing that the following criteria are fulfilled:

- The Von Mises stress σ_{VM} at the centroid of elements of a peak stress region of no more than 2t x 2t, with t being the thickness of the elements, is to comply with the following criteria:
  $\sigma_{VM} \leq 1,3\ \alpha\ R_f$
- Outside the peak stress region of 2t x 2t, the Von Mises stress is to comply with [5.4.1].
- For areas where the stress is higher than σ_a a plastic stress redistribution should be demonstrated to the satisfaction of the Society or obvious from engineering judgement.

6 Buckling

6.1 General

6.1.1 The stability of the structure is to be checked, as needed, using methods recognised to the satisfaction of the Society.

6.1.2 As possible, the risk of instability (buckling) of structural elements is to be avoided or minimised by adequate structural arrangement (e.g. by avoiding large unstiffened panels or members with high slenderness, by the proper orientation of stiffeners with respect to direction of compressive stresses, etc.) and by detailing (e.g. by providing lateral restraint by tripping brackets, or additional members).

6.1.3 The buckling strength of structural elements is to be ascertained considering the most unfavourable combinations of loads likely to occur, with respect to possible modes of failure.

6.1.4 For unstiffened or ring-stiffened cylindrical shells, both local buckling and overall buckling modes are to be considered for buckling strength assessment.

6.1.5 For stiffened panels, buckling check is to be performed with NR615 Buckling Assessment of Plated Structures.
The buckling of tubular members is to be checked according to recognized codes or standards.

6.2 Buckling strength criteria

6.2.1 The buckling strength of structural elements is to be ascertained for the effect of stresses resulting from:

- compression induced by axial loads
- compression induced by bending in flanges and web of members
- shear
- external pressure
- localised compression loads.

6.2.2 The buckling capacity of structural elements for each failure mode is to be evaluated following recognised techniques, taking into account:

- potential overall and local failure mode(s)
- due allowance for the manufacturing and/or construction tolerances and residual stresses
- interaction of buckling with yielding
- when relevant, the interaction between overall and local buckling.

6.2.3 A structural element is considered to have an acceptable buckling capacity if its buckling utilisation factor η satisfies the following criterion:

$\eta \leq \eta_{ALL}$

with:

$\eta_{ALL} = \alpha$

α : Basic allowable stress factor defined in [5.4.2].

The buckling utilisation factor η of the structural member is defined as the highest value of the ratio between the applied loads and the corresponding ultimate capacity or buckling strength obtained for the different buckling modes.

6.3 Members

6.3.1 In structural members subject to simultaneous compression and bending, due account is to be given to beam-column effect.

6.3.2 Special attention is to be paid to the boundary connections of structural members for which buckling is a possible mode of failure, and to the design of arrangements and items intended to prevent buckling.

7 Fatigue

7.1 General

7.1.1 Structural elements for which fatigue is a probable mode of failure are to be adequately designed to resist the effects of cumulative damage caused by repeated application of fluctuating stresses.

The predominant cause of fluctuating stresses leading to crack propagation and fatigue failure is normally wave loading. However, other sources of cyclic loads such as wind, rotating machinery or cranes may also induce significant fatigue loadings and are to be given due consideration where relevant.

7.1.2 Fatigue evaluations are to be carried out according to recognised methods to the satisfaction of the Society.

7.2 Fatigue life

7.2.1 The design is to ensure a design fatigue life at least equal to the design life mentioned in [1.2.2].

7.2.2 A further increase in the design fatigue life is to be considered for elements in uninspectable areas or areas where repair within the expected life time is not possible or practical.

7.2.3 When a unit is converted from an existing unit or an existing unit undergoes a redeployment or life extension, due consideration is to be given to fatigue accumulation during the life time already elapsed and to information that can be obtained from the observation of structure. For surface unit, guidelines defined in NI593 Ship Conversion into Offshore Units - Redeployment and Life Extension of Offshore Units, are to be considered.

7.3 Design

7.3.1 The level of fluctuating stress is to be adequately limited.

A suitable fatigue life is best achieved by adequate joint detail design and fabrication quality control. Joint detail design is to avoid, as far as possible, joint eccentricities introducing secondary stresses and local restraints, abrupt section changes, re-entrant corners, notches and other stress raisers.

In fatigue sensitive areas, improved joint performance is to be achieved through, as necessary, a combination of reduction in nominal stresses, obtained by increased thicknesses, improved detailing, providing smooth transitions and suitable shape of weld joints.

7.3.2 Fatigue strength is also affected by fabrication induced (residual) stresses and by stress raisers caused by inherent weld defects, particularly surface defects.

This is normally accounted for by joint classifications, provided however that standard quality control procedures are adequately implemented.

7.3.3 Where it is not possible to improve fatigue life by another method, the Society will examine, in each separate case, weld profile improvement techniques such as grinding, shot blasting, TIG dressing and other post-welding treatments.

Where a joint performance depends upon particular fabrication and quality control requirements, adequate procedures are to be drawn up providing the necessary specifications concerning workmanship and inspection.

7.3.4 Due attention is to be given to attachment of fittings onto primary structural members. Unavoidable cut-outs or openings are to be, as far as possible, located outside high stress areas and superposition of notches is to be avoided.

7.4 Fatigue analysis

7.4.1 The long term distribution of fluctuating stresses is to be obtained from an overall structural analysis, for the relevant load cases, in accordance with Ch 2, Sec 3, [6.4].

Spectral analysis is generally to be used. Time domain analysis is to be preferred when both non-linearities and dynamic effects are significant. Deterministic analysis may be used when appropriate.

7.4.2 Geometrical stress concentrations result from openings, transitions in properties or geometry of members, end connections and other discontinuities. When not modelled in the overall analysis, such geometrical stress concentrations may be accounted for by appropriate Stress Concentration Factors (SCF).

Proposed SCF's are to be duly documented to the satisfaction of the Society. SCF's may be obtained from analytical solutions, in some cases, or from adequately calibrated parametric equations or by direct stress analysis. The Society reserves the right to call for such analysis if found necessary.

7.4.3 Local effects, resulting from residual stresses and from weld surface defects, are to be accounted for through joint classification.

7.4.4 The cumulative fatigue damage at each spot is to be calculated using the Palgren-Miner Rule and an appropriate S-N curve, taking into account joint classification, thickness effect and the degree of corrosion protection.

7.4.5 Fracture mechanics methods may also be used for fatigue analysis subject to adequate consideration of the stress history, of the joint geometric configuration and of the following, to the satisfaction of the Society:

- selection of initial crack geometry and size
- crack propagation rate, taking into account corrosion factors
- toughness parameters governing final crack instability for which a verification by appropriate fracture mechanics testing may be required.

Section 4 Other Structures

1 Superstructures and deckhouses

1.1 Surface units

1.1.1 For surface units, the relevant provisions of Pt D, Ch 1, Sec 13 are applicable.

1.2 Self-elevating units and column stabilized units

1.2.1 For self-elevating and column stabilized units, deckhouses are to have sufficient strength for their size, function and location, with due consideration given to the environmental conditions to which the unit may be exposed. The requirements of Pt D, Ch 1, Sec 13 may be applied as far as practicable.

2 Bulwarks, guard rails and gangways

2.1 Surface units

2.1.1 For surface units, the relevant provisions of Part D, Chapter 1 are applicable, in addition to those of the present Article [2], which are applicable to all types of units.

Alleviations may be considered by the Society when the application of these requirements would interfere with the operation of the unit, provided that equivalent arrangements for protection are provided.

2.2 Bulwarks and guard rails

2.2.1 Efficient bulwarks or guard rails are to be fitted on all exposed parts of the freeboard and superstructure decks. Their height is to be at least 1,0 m from the deck.

Alleviations may be considered by the Society when the application of these requirements would interfere with the operation of the unit, provided that equivalent arrangements for protection are provided.

2.2.2 As a rule, the spacing of bulwark stanchions is not to exceed 1,8 m or, when the stanchions are close to the gangway ports, 1,2 m. As far as practicable, stanchions are to coincide with beams.

2.2.3 Where guard rails are provided, the opening below the lowest course is not to exceed 230 mm. The other courses are not to be more than 380 mm apart.

The guard rail supports are not to be spaced more than 1,35 m.

2.3 Gangways – Surfaces

2.3.1 Satisfactory means (gangways, etc.) are to be provided for safe move of personnel on board, in particular between accommodation and work areas.

Gangways, stairs and passages exposed to environment are to be provided with a non-slip surface and, except when contiguous structures provide an equivalent protection, fitted with guard rails in compliance with [2.2].

3 Freeing ports

3.1 Surface units

3.1.1 For surface units, the relevant provisions of Pt B, Ch 11, Sec 12, [6] of the Ship Rules are applicable, in addition to the provisions of [3.2], which are applicable to all types of units.

3.2 Exposed decks

3.2.1 Adequately distributed freeing ports of sufficient section, with lower edges located as near the deck as practicable, or other equivalent means, are to be provided for efficient drainage of water from exposed decks, in particular for areas limited by bulwarks.

4 Helicopter deck

4.1 General

4.1.1 Units having the additional class notation **HEL** are to comply with the present Article.

4.2 Reference standards

4.2.1 The design and arrangement of the helicopter facilities are to be in accordance with the Civil Aviation Publication 437 "Offshore Helicopter Landing Areas – Guidance on Standards" (CAP 437).

4.3 Structure

4.3.1 The scantlings of the structure are to comply with the requirements of Pt D, Ch 1, Sec 14, [3]

4.4 Helideck safety net

4.4.1 A 1500 mm wide safety net, with flexible netting is to be provided around helideck.

5 Moonpool area

5.1 General

5.1.1 Applicable requirements for moonpool assessment are detailed in Guidance Note NI621 Guidelines for Moonpool Assessment.

Section 5 Corrosion Protection

1 General

1.1 Protection methods

1.1.1 General

The structure of the unit is to be effectively protected against corrosion damage using either one or a combination of the following methods:

- cathodic protection
- application of protective coatings
- selection of material.

1.2 Design of corrosion protection systems

1.2.1 The design of the corrosion protection systems is to consider the possible effects of environmental and galvanic corrosion, stress corrosion and corrosion fatigue.

1.2.2 Corrosion protection systems for steel structures are to be designed according to a recognised methodology such as the one developed in NI423 Corrosion Protection of Steel Offshore Units and Installations.

Design specification and calculation notes of corrosion protection system are to be submitted to the Society for approval.

If the design is conducted without reference to a recognised standard, the methodology and all the values utilized are to be documented and justified to the satisfaction of the Society.

1.2.3 It is the responsibility of the party applying for classification to inform the Society when the environment at an intended site of operation includes unusual corrosive conditions or when the structural elements are exposed to corrosive agents with consideration of the activities of the unit.

1.2.4 Both sacrificial and impressed current anodes are to be designed for a minimum service life in accordance with contemplated intervals between surveys in dry condition, unless particular arrangements are made for their replacement afloat.

Note 1: The attention of the Designer and the Owner is drawn upon requirements of Part A, Chapter 2 concerning maximum intervals between two surveys in dry condition.

1.3 Cathodic protection systems

1.3.1 Material certificates covering the corrosion protection equipment are to be submitted to the attending Surveyor.

1.3.2 Electrical continuity is to be ensured between anodes and the unit's steel structure. The anodes are to be fitted by welding.

Welding of sacrificial anode supports, or any device, onto structural members is to be carried out by qualified welders in accordance with approved procedures.

1.3.3 Anodes are to be properly installed, in such a way that:

- they do not induce unacceptable local stresses in the structure of the unit
- their efficiency is not impaired.

1.3.4 Prior to unit's delivery, corrosion protection systems are to be inspected.

1.3.5 For cathodic protection systems, in addition to inspection provided for in [1.3.4], installation effectiveness are to be checked apart from any annual in-service survey:

- for sacrificial anodes cathodic protection system, three months after the system has been put into operation for bare steel structures or one year after the system has been put into operation for coated structures
- for impressed current cathodic protection system, one month after the system has been put into operation.

2 Requirements applicable to particular areas

2.1 Submerged zone

2.1.1 Exposed steel surfaces in the submerged zone are to be provided with a cathodic protection system. This system may be complemented by a coating system.

2.2 Internal zone

2.2.1 Internal parts of tanks intended for sea water ballast are to be protected by coating, possibly complemented by cathodic protection.

2.2.2 A coating system for corrosion protection is normally considered to be a full hard coating. Other coating systems (e.g. soft coating) may be considered acceptable as alternative, provided that:

- they are applied and maintained in compliance with the Manufacturer's specification
- they give a protection against corrosion equivalent to those given by a hard coating for a minimum period of 3 years.

Coating is to be applied according to coating manufacturer recommendations.

2.2.3 Sacrificial anodes may be of aluminium or zinc types. The use of magnesium is limited to the conditions described in NI423 Corrosion Protection of Steel Offshore Units and Installations.

The amount of sacrificial material and location of anodes are to be chosen in accordance with:

- NI423 Corrosion Protection of Steel Offshore Units and Installations
- NI409 Guidelines for Corrosion Protection of Seawater Ballast Tanks and Hold Spaces.

or other recognised codes or standards.

The design life of the cathodic protection system is not to be less than 5 years.

2.3 Thickness increments

2.3.1 A thickness increment of platings and, where relevant, of stiffeners, is to be added to the Rules prescribed thickness where the concerned structural members are left unprotected or are not sufficiently protected against corrosion.

Thickness increments are to be also provided, if necessary, in special areas subject to mechanical wastage due to abrasion or in areas of difficult maintenance.

Thickness increments are to be evaluated on the basis of an anticipated rate of corrosion in the corresponding areas, and of the design life of the structure.

2.3.2 The party applying for classification is to notify the Society where thickness increments are provided. Adequate indications are to be given in the relevant structural drawings.

2.3.3 The Society reserves the right to require thickness increments, where deemed appropriate.

Section 6 Construction Survey

1 General

1.1 Document approval

1.1.1 When a construction is planned, the Builder has to contact the Society in order to submit the necessary documentation and to provide the information needed to allow Surveyors to carry out construction surveys in satisfactory conditions. It includes the approval of welding procedures, the qualification of welders, the welding inspection and the survey of testings.

1.2 Inspections and testings

1.2.1 As a general rule, construction and all necessary inspections and testings are to be carried out by the Builder and surveyed by the Society to the satisfaction of the attending Surveyors.

2 Construction survey scheme

2.1 Reference documents

2.1.1 A construction survey scheme is to be established in compliance with NR426, or, subject to a preliminary written agreement, in accordance with other particular specifications based upon recognised principles or construction codes - in particular relevant National Codes.

2.1.2 The codes and standards which are proposed as per [2.1.1] are to be specifically suitable for the type of construction and are to be considered by the Society as similar to the NR426, as specified in [2.1.1].

2.1.3 Where appropriate, the Surveyor may call for adaptation of these documents, or additional requirements, to meet the intent of the Rules.

2.2 Construction survey scheme applicable to several constructions

2.2.1 Instead of a construction survey scheme applied case by case, an equivalent construction survey scheme applying to all constructions of the same Builder with minor alterations, may be approved by the Society upon particular request.

3 Application of construction survey code

3.1 Forming

3.1.1 Forming of rolled steel products is to comply with the relevant requirements of the construction survey code which is used (refer to [2.1]).

3.2 Welding

3.2.1 Welding of steel and qualifications of welding procedures and welders are to comply with the relevant requirements of the construction survey code which is used (refer to [2.1]).

3.3 Welding inspection

3.3.1 Weld inspection is to comply with the relevant requirements of the construction survey code which is used (refer to [2.1]).

3.4 Conflicts between reference documents

3.4.1 If requirements mentioned in [3.1] to [3.3] are not similar, or are less stringent than those of NR426 Construction Survey of Steel Structures of Offshore Units and Installations, requirements of NR426 prevail.

Section 7 Tests and Trials

1 General

1.1 Application

1.1.1 The present Section deals with the tests of the various compartments and watertight members of the hull structure. The object of such tests is to check the strength of the structure or the watertightness of the compartments or both simultaneously.

1.1.2 The tests are to be carried out in the presence of the Surveyor at a sufficiently advanced stage in the building to prevent later modifications from endangering the strength or watertightness of the parts tested.

1.1.3 The present Section is applicable to wholly welded parts of the unit. For the other parts, additional tests may be called for by the Surveyor.

1.1.4 The test loads shown in the following are to be increased to the satisfaction of the Society in the case of heavy density liquids.

1.1.5 Where the tests stated in the present Section are proving impossible or inopportune, the Society may accept other testing methods, provided it be proved that the later enable the checking of the strength and watertightness of the compartments concerned under conditions deemed equivalent.

1.2 Water tests

1.2.1 Where a water test is required, it may be carried out before or after the unit is afloat.

1.2.2 Water testing of the double bottom compartments and peaks is to be made before cementing.

1.2.3 A coat of primary paint may be applied before testing. Where the tightness of the compartment has been checked before the water test, the latter may be carried out after the application of the preservative coating.

1.2.4 No water test is required for compartments the sides of which have been checked while water testing the adjoining compartments.

1.3 Air tests

1.3.1 Where an air test is required, the effective air pressure is not to exceed 0,24 bar.

The staff being under cover, the maximum pressure is maintained a few minutes at the beginning of the test, then reduced to 0,12 bar while the welded joints connecting prefabricated members are being examined. These joints are to be tested with an appropriate soapy liquid.

1.3.2 The air pressure is to be clearly shown by means of a water-column pressure gauge. Furthermore, an efficient safety system against overpressures is to be provided in the compartment under testing.

1.3.3 Where the air test concerns a capacity for which a preservative coating is intended, it is to be carried out before applying the coating on the welds which connect the prefabricated members.

1.4 Documents to be submitted

1.4.1 The detail of the tests foreseen by the Builder is to be specified by the test plan of the various compartments as called for in Part A, Chapter 1.

2 Watertight compartments

2.1 Double bottom compartments

2.1.1 All the double bottom compartments intended to contain liquid are to undergo a water test under the load height relating to the highest of the following levels:

- overflow
- load waterline.

Furthermore, for compartments intended to contain fuel oil, the test load height is not to be less than 2,40 m above the compartment top.

2.1.2 Liquid mains that are parts of the double bottom structure are to undergo a water test under a load height to be determined in agreement with the Society.

2.2 Peaks and ballast compartments

2.2.1 A collision bulkhead not bounding a ballast compartment or liquid tank is to undergo a water test under the load height relating to the waterline.

2.2.2 Peaks, deep tanks and other compartments used for ballast purposes are to undergo a water test under the load height relating to the highest of the following levels:

- overflow
- load waterline
- 2,40 m above the compartment top.

Testing of the aft peak is to be performed after the sterntube has been fitted, if applicable.

2.3 Fuel oil bunkers and independent fuel oil tanks

2.3.1 Fuel oil bunkers and independent fuel oil tanks are to undergo a water test under the load height relating to the overflow, being not less than 2,40 m above the compartment top.

2.4 Other liquid storage compartments

2.4.1 Integrated fresh water compartments are to be tested according to [2.2.2].

2.4.2 Independent fresh water compartments are to be water tested under the load height relating to the higher of the following levels:

- overflow
- 0,90 m above tank top.

2.4.3 Tanks intended to carry products with a density greater or equal to 1 are to be tested taking into account this density; test program is to be submitted to the Society's approval.

2.5 Shaft tunnel

2.5.1 The shaft tunnel, if one exists, is to be hose tested.

3 Miscellaneous

3.1 Rudder

3.1.1 After completion, rudders of watertight construction, if any, are to undergo a water test under the load height the value of which is equal to the scantlings draught without being less than 2,40 m.

3.1.2 The preceding test may be replaced by an air test under a pressure of 0,2 bar.

3.1.3 Rudder shaft is to be magnetic particle inspected before installation (or after any repair).

3.2 Doors on watertight bulkheads

3.2.1 Doors on watertight bulkheads are to be hose tested, where such bulkheads are not water tested.

Hatch covers on weatherdecks, if any, are to be hose tested.

3.3 Shell openings closures

3.3.1 Shell openings closures are to be hose tested.

Section 8 Particular Unit Types

1 Scope

1.1 Particular types of units

1.1.1 The present Section defines the particular requirements for the design of units, which are depending on their structural types:

- surface units
- self-elevating units
- column stabilized units.

In addition, the provisions related to specific service notations are to be duly considered. The Society reserves the right to require that some of these provisions are referred to, where deemed relevant, even if the corresponding service notation is not granted.

2 Surface units

2.1 Mobile units

2.1.1 Surface units which are mobile offshore units are to satisfy the requirements of the present Section.

2.1.2 Design and strength of hull structure are to comply with the requirements of Part D, Chapter 1, as applicable to the construction of the subject vessel, in lieu of the provisions of the present Chapter.

2.1.3 The required strength of the unit is to be maintained in way of the moon-pool and in way of large hatches.

In this respect, consideration is to be given to the required main hull girder section modulus and particular attention is to be given to the continuity of fore and aft members.

The design of moon pool walls is to ensure an adequate strength for pressure loadings and particular attention is to be given to possible impact loading due to waves or trapped objects during transit.

The detail design of hatch beams and corners is to comply with the applicable requirements of the Ship Rules.

2.1.4 Additional structures not covered by the Ship Rules such as drillfloor, crane pedestal, etc., are to be designed in accordance with the requirements of Part B, Chapter 2 and Part B, Chapter 3.

For the calculation of dynamic loads induced by the motions of the unit, accelerations are to be taken not less than those defined by the Ship Rules, for a probability of 10^{-8}.

In the case of floating units for production and/or storage, refer to Pt D, Ch 1, Sec 4.

2.2 Permanent installations

2.2.1 Surface units which are permanent installations are to comply with the requirements of Part D, Chapter 1, or of NR542 Classification of Floating Gas Units, as relevant.

3 Self-elevating units

3.1 General

3.1.1 Additional structural requirements and guidance for the classification of self-elevating units are given in NI534 Rules for the Classification of Self-Elevating Units - Jack-ups and Liftboats.

4 Column stabilized units

4.1 General

4.1.1 Additional structural requirements and guidance for the classification of column stabilized units are given in NR571 “Classification of Column Stabilized Units”.

Section 9 Local Structural Improvements

1 General

1.1 Application

1.1.1 The present Section provides requirements and guidance for local structural reinforcements.

1.1.2 Depending on the type and service of the unit, a risk analysis may be required to assess the risk of explosion, collision and dropped objects.

2 Protection to explosion

2.1 General

2.1.1 Scope

The scope of the present Article is to provide guidance for the verification of the structure safety with respect to explosion.

The requirements are eligible for the verification of the resistance of hull structure components submitted to a shock pressure wave.

The types of explosions to be assessed are:

- from an open air cloud (external explosion)
- between main deck and process deck (tunnel explosion)
- inside closed capacities (internal explosion).

2.1.2 Safety criteria

The safety principle is that the structural elements may suffer permanent deformations without any rupture allowing the transmission of the pressure waves and hot gases or liquids through the steel panels.

For internal explosions the above principle can be fulfilled in two ways:

- the boundary structure of the tank resists to the extreme possible pressure wave
- the tank is equipped by a system allowing a limitation of the maximum pressure such as relief valves or sacrificial panels.

2.1.3 Explosion characteristics

The explosion is characterized by 2 parameters:

- the equivalent exploded TNT mass
- the distance from the explosion location to the verified ship structural component.

The explosion is considered occurring with stoechiometric conditions.

Note 1: 1 kg hydrocarbon (gas or liquid) is equivalent to 1 kg of TNT.

2.1.4 Structural detail design

To improve the resistance to explosion loads, structural details have to be designed to allow a good transmission of the in-plane forces.

Details have to be designed to allow in plane deformation with as low as possible punching effect and shear failure of welds.

2.1.5 Calculation to be submitted

The following documents are to be submitted to the Society for information:

- Equivalent exploded TNT mass calculation.
- Pressure profile and maximum pressure of the shock wave justifications. The pressure wave can be determined either by test results or either a recognized computation fluid dynamic tool.
- The finite element model with the modelling hypothesis (element types, boundary conditions, damping, loading cases, load phases, etc.).
- Response and resistance of the structural elements calculation.
- Arrangement of the maximum pressure limitation system and operating assessment.

2.2 Areas to be considered

2.2.1 Turret and turret moonpool

Leakage can occur inside such spaces with generation of an explosive atmosphere.

In case of explosion, the spaces boundaries with the surrounding hull structure should have to resist to the internal explosions. For the protection principles see [2.1.2].

2.2.2 Main deck

The main deck may have parts below the process deck or in open air.

For the parts below the process deck, due to possible leakage, it can be exposed to explosions of type tunnel explosion.

For the parts in open air, they can be exposed to explosions occurring outside the topside equipment. The type of explosion to be considered is aerial explosions.

2.2.3 Superstructure front

The superstructure front can be exposed to explosions occurring outside the topside equipment.

When specified superstructure front resistance has to be assessed. The type of explosion to be considered is aerial explosions.

2.2.4 Tanks

Except otherwise specified no assessment is required for tank boundary resistance to internal explosions.

2.3 Criteria

2.3.1 Criteria for the shell and bulkheads

The ultimate strength of structural components is defined in terms of non rupture of the component after the shock load action.

For shell and bulkhead panels the maximum strains in model elements have to be determined.

The following criteria are to be fulfilled, versus the modelling (see [2.4.3]):

- the maximum element deformation ϵ_M for elasto-plastic calculations:

  $\epsilon_M \leq 0,8\ \epsilon_{Ult}$

  where ϵ_{Ult} is the material ultimate strength elongation
- the maximum stress σ_M for elastic calculations

  $\sigma_M \leq 0,8\ E\ \epsilon_{Ult}$

  where E is the material Young modulus.

2.3.2 Sacrificial panel

Under the maximum specified pressure, the opening of the area covered by the sacrificial panel is to be sufficient to allow a gas flow stopping the shock wave pressure increase.

When structural elements exist in the gas flow their resistance to the drag forces has to be assessed.

2.3.3 Relief valves

Under the maximum specified pressure, the relief valve openings are to be sufficient to allow a gas flow stopping the shock wave pressure increase.

2.4 Methodology

2.4.1 General

Explosion is a transient dynamic phenomenon. The response can be assessed by an adequate finite element software.

At a pre-design stage, 1 Degree Of Freedom (DOF) mass-spring modelling can be used to assess the elastic response of the structural components. A finite element model is to be done to determine the free modes from which the 1DOF models will be selected.

At design stage, the assessment is to be done using a finite element model either elastic or elastoplastic.

2.4.2 Free mode determination

The boundary conditions are to be carefully determined.

In particular the boundaries are to be located in way of continuous bulkheads or floors.

2.4.3 Modelling

a) 1 DOF mass-spring model

The free modes, which half periods are in the vicinity of the pressure shock wave durations, can be represented by a 1 DOF system.

The 1 DOF system is characterised by:

- free frequency equal to the represented component free mode period
- spring stiffness so that the displacement of the 1 DOF system under a static unit force is equal to the maximum deflection of the structural component under a uniform static pressure corresponding to the unit force
- for the transient response calculation, the damping can be neglected.

b) Finite element model

The finite element model is to take into account:

- the dynamic response of the panel under impulsive loads
- the liquid added mass effects for wet components
- the structural damping and, when relevant, the hydrodynamic damping (see [2.4.4])
- the large deformation effects
- the material plastification effects, when elasto-plastic calculations are carried out.

The model size and finite element types have to be able to determine accurately:

- the correct component deformation under static and impulsive transient pressure
- the correct stress fields, in particular in way of areas with stress concentration
- at least the 2 first free vibration modes of the components of highest free frequencies
- the plastification characteristics of the elements, when elasto-plastic calculations are carried out.

2.4.4 Damping

The structural damping ratio (in percent of critical damping) can be taken equal to 10%.

The hydrodynamic damping ratio is to be determined by a recognized method.

2.4.5 Model response calculation

The response has to be computed during the explosion wave pressure duration and after on a time length corresponding, at least, to 2 times the largest period of the structural component first mode.

For panels and structural components response, the response has to be computed taking into account the shock wave pressure (see [2.5]).

a) 1 DOF mass-spring model

The equivalent static pressure is determined taking into account the maximum displacement of the 1 DOF model.

Elastic calculation under static loads allows to assess the stresses and strains of the model.

b) Finite element model

The stresses and strains calculated through a finite element model are to comply with the criteria given in [2.3].

2.5 Explosion pressure wave loads

2.5.1 Definitions

W : Equivalent exploded TNT mass, in kg

D : Minimum distance from the plating component to the explosion location, in m.

2.5.2 External explosion

The shock wave pressure, at a given location versus time is given by the following equation:

$P = P_M \exp(-n\,t)$

where:

P_M : Maximum shock wave pressure, in kN/m², given by:

$$P_M = 730\frac{W^{0,527}}{D^{1,58}}$$

n : Decay shock wave pressure parameter, in sec, given by:

$$\frac{1}{n} = 0,48W^{0,196}D^{0,38}10^{-3}$$

2.5.3 Internal explosion

For internal explosion, the pressure profile is to be a triangle, which characteristics: maximum pressure, rise time, decay time to 0, are functions of the dynamic boundary characteristics and are to be duly justified.

The pressure profile characteristics can be determined from results of tests or a computational fluid dynamic tool.

2.5.4 Tunnel explosion

For tunnel explosion, the pressure profile is to be a triangle, which characteristics: maximum pressure, rise time, decay time to 0, are to be duly justified.

The pressure profile characteristics can be determined from results of tests or a computational fluid dynamic tool.

3 Collision

3.1 General

3.1.1 Scope

The present Article provides guidance for the verification of the structure in case of collision.

3.1.2 Design against collision

When required by the risk analysis, the effect of collision is to be evaluated in order to assess the damages likely to occur.

Impact energy absorption capability through plastic deformations is to be obtained by the correct use of ductile materials and by avoiding abrupt section changes, notches and other stress raisers.

For units intended to operate in areas where icebergs or ice-islands are expected, an evaluation of resistance to collision may be required in agreement with the party applying for classification.

3.1.3 Definitions

- Minor collision:

  Collision between the offshore unit and a vessel which dimensions are small compared to the dimensions of the offshore unit. e.g. supply vessel.

- Major collision:

  Collision between the offshore unit and a vessel which dimensions are significant compared to the dimensions of the offshore unit. e.g. shuttle tanker.

- Hourglass energy:

  Hourglass energy generating Hourglass modes represent nonphysical, zero-energy modes of deformation that produce zero strain and no stress and which occur only in under-integrated finite element models.

3.1.4 Safety principles

The consequence of a collision is to be limited as defined below.

- Minor collision:

  The collision energy is to be absorbed by the colliding vessel and the side shell of the offshore unit without risk of flooding. Therefore the safety criterion is that the side shell may suffer permanent deformations but without any rupture.

  For protectors, the collision energy is to be absorbed by the colliding vessel and the protector with no contact with the protected item.

- Major collision:

  The collision energy is to be absorbed by the colliding vessel, the side shell and the internal structure of the offshore unit without any impairment of the watertightness integrity of the inner hull.

3.1.5 Documents to be submitted

The following documents are to be submitted to the Society for information:

- Risk analysis:

  When collision analysis is performed, a risk analysis is taking into account the boats operating around the unit, such as supply boats, shuttle tanker, etc is to be submitted.

  The risk analysis is to determine, for each vessel operating around the unit, the speed, the mass and the associated probability of collision. For permanent offshore units: list of shuttle tankers and supply vessels intended to be operated during the unit life with the characteristics of these vessels.

- Colliding speeds and justification.
- Colliding energy calculation.
- Collision analysis report.

3.2 Collision hypothesis

3.2.1 General

As a rule, the collision analysis is to consider the results of the risk analysis.

3.2.2 Collided areas

The following areas of the unit should be considered:

- free side shell between two transverse bulkheads
- free side shell at the level of the first transverse ring from a transverse bulkhead
- side shell in way of offloading area.

When protectors are verified, the following areas should be considered, as relevant:

- side shell at spread mooring zones
- side shell at the offloading line protection zones
- side shell at the riser zones.

3.2.3 Collision scenarii

The colliding vessel is considered hitting the side shell by the bow at 90°.

Note 1: Other collision angle may be required when deemed necessary.

- The colliding vessel sizes and bow shapes (with or without bulb) to be considered are selected from the list of shuttle tankers and supply vessels intended to be operated during the unit life.
- The colliding vessel speed is to be specified considering the operation instructions.

Without any information, for minor collision, displacement and speed of the colliding vessel are to be taken equal respectively to 5000 t and 2,0 m/s.

3.2.4 Colliding energy

The colliding vessel energy E_c, in kJ, is to be taken equal to:

$$E_c = \frac{1}{2}(M + M_a)V^2$$

where:

M and M_a: Displacement and added mass of the colliding vessel

As a rule, hydrodynamic added mass M_a is to be taken equal to 0,1M for bow/stern impact and 0,4M for side impact.

V : Speed of the colliding ship, in m/s.

3.3 Methodology

3.3.1 General

Collisions may be assessed using one of the methods defined here under. Safety factors are defined on a case-by-case basis.

3.3.2 Colliding ship

The bow of the colliding ship is in general considered as non-deformable. Therefore the geometrical contour of the bow defines the indented area of the unit.

3.3.3 Finite Element Method

For collision analysis using Finite Element Method, following recommendations are to be respected.

a) Meshing:

In general, only the studied area is modelled and meshed with shell finite elements. The rest of the ship is taken into account by defining a rigid body, stitched to the deformable model and characterized by a mass and inertia matrix associated to the center of gravity of the ship. A particular attention is to be paid in the transition area between different meshing sizes and boundary conditions are to be as far as possible and not influence the deformation modes of the structure.

In the impacted area, dimensions of shell elements are not to be greater than 100 mm x 100 mm and a minimum of 3 elements between 2 ordinary stiffeners is recommended. A converging analysis may be performed to ensure that the crushing force does not change substantially when the mesh size is refined.

Element aspect ratio is to be as close to 1 as possible, and not to exceed 3. Element's corner angles are to be greater than 60° and less than 120°. Triangular elements and elements having dimensions less than their thickness are to be avoided.

In the deformation area, the mesh sizes of the colliding vessel and the offshore unit are to be identical.

A minimum of 5 integration points in the plate thickness is to be considered to ensure a correct plastic behaviour of the plate element.

b) Material's law and rupture criteria

The elasto-plastic material and the erosive laws are to be considered in the non-linear computation.

The elasto-plastic material characteristics and the failure strain criteria used in the erosive law are to be provided for information.

c) Computation

Finite element calculations are to be performed until the limit state is reached, using a non-linear elasto-plastic recognized software based on a step by step time integration approach.

If under-integrated elements are used, hourglass energy is to be checked and to be less than 5% of the global internal energy.

As a rules, the total energy (sum of kinematic energy, deformation energy,…) should remain constant during the computation.

When deemed necessary, global movements of the offshore unit should be taken into account in case of major collision.

3.3.4 Analytical Methods

As an alternative, following analytical methods can be applied.

a) Empirical method

Analytical methods, developed to assess the energy absorbed during a collision, such as Mc Dermott (1) or Rosenblatt (2) methods, in case of minor collision and Minorsky (3) or Pedersen and Zhang (4) methods, in case of major collision, can be applied.

b) Super-element method

The analytical method based on the decomposition of the structure into large structural entities and called super-element method, developed by M. Lutzen (5) or H. Le Sourne (6) and L. Buldgen (7), can be used for minor and major collisions.

c) Critical strain

For analytical methods, the values of critical strain in Tab 1 are to be considered.

Note 1:

(1) McDermott, J.F., et al, 'Tanker Structural Analysis for Minor Collisions', SNAME Transactions, Vol. 82, pp. 382-414, 1974.

(2) Rosenblatt & Son, Inc, 'Tanker Structural Analysis for Minor Collision', USCG Report, CG-D-72-76, 1975.

(3) MINORSKY, V.U., 'An Analysis of Ship Collisions with Reference to Protection of Nuclear Power Plants', Journal of Ship Research, 1959.

(4) PEDERSEN, P.T., ZHANG, S., 'On Impact Mechanics in Ship Collisions', Marine Structures, 1998.

(5) LUTZEN, M., SIMONSEN, B.C., PEDERSEN, P.T., 'Rapid Prediction of Damage to Struck and Striking Vessels in a Collision Even', Int. Conf. of Ship Struct. for the new Millennium: Supporting Quality in Shipbuilding, Arlington, 2000.

(6) Hervé Le Sourne, 'A ship Collision Analysis Program Based on Super-element Method Coupled with Large Rotational Ship Movement Analysis', in 4th International Conference on Collision and Grounding of Ships, Hamburg, 2007.

(7) Loïc Buldgen, Hervé Le Sourne, Nicolas Besnard, and Philippe Rigo , 'Extension of the super-element method to the analysis of the oblique collision between two ships', Marine Structures, vol. 29, 2012.

Table 1 : Critical strain

Steel grade	critical strain
Normal Strength steel (Yield strength less than or equal to 235 Mpa)	20%
High Strength steel (Yield strength less than or equal to 355 Mpa)	15%

3.4 Verification criteria

3.4.1 Criteria

For minor collision, the considered limit state is the first rupture of the side shell elements.

For minor collision in way of protectors, the considered limit is the contact with the protected item.

For major collision, the limit state is the first rupture of the inner hull.

For finite element methods, the justification of the critical strain values is to be submitted.

3.4.2 Results

The results to be provided are:

- the absorbed deformation energy versus penetration
- the deformed structure at the end of the simulation
- the list of cracked plates.

4 Dropped objetcs

4.1 General

4.1.1 Scope

The present Article provides guidance for the verification of the deck structure in case of dropped objects.

4.1.2 Safety principle

The safety principle is that the structural elements may suffer permanent deformations but without any rupture.

4.1.3 Calculations to be submitted

The following documents are to be submitted to the Society for information:

- equipment considered that may fall on the deck with mass
- maximum dropped height and justification
- deck areas to be assessed
- deck modelling
- dropping object modelling
- deck response and extreme deformations.

4.2 Methodology

4.2.1 Dropping object

The dropping object is modelled in such a way that its contact area and stiffness behaviour are respected.

4.2.2 Deck structure

Depending on the size of the dropping object, the deck structure to be modelled is a panel between primary supporting members, or bulkheads/side shell.

4.2.3 Procedure

The dropping object is considered as deforming the deck structure by step by step static indentation, both being deformable, taking into account the relative stiffness.

The indentation is performed until the limit state is reached, as defined in [4.2.4].

4.2.4 Criteria

The energy of the dropping object at the moment of the contact with the deck is to be lower than the absorbed energy by the deck deformation at the limit state.

The limit state is to be defined as follows:

- for hull decks constituting the top of tanks in the cargo area, the limit state corresponds, generally, to a strain of maximum 5% in the deformed area
- for other decks, including laydown areas, the limit state corresponds to the first rupture of a plate in the deformed deck area.

Different definitions of the limit state may be considered if specified by the Owner.

4.2.5 Finite element calculation

Finite element calculations are to be performed until the limit state is reached, using a non-linear elastoplastic recognized software.

4.2.6 Results

The results to be provided are:

- the absorbed deformation energy versus indentation steps, until the limit state is reached
- the deformed structure at the limit state
- the list of the cracked deck plates.

NR445

RULES FOR THE CLASSIFICATION OF OFFSHORE UNITS

Part C
Facilities

January 2024

Table of Content

Chapter 1 Machinery and Piping

Section 1 General Requirements

Section 2 Diesel Engines

Table of Content

Table of Content

Table of Content

Table of Content

Table of Content

Table of Content

Table of Content

Chapter 5 SUSTAINABILITY

Section 1 General Requirements

Table of Content

Part C
Facilities

CHAPTER 1
MACHINERY AND PIPING

Section 1 General Requirements

1 General

1.1 Application

1.1.1 The present Chapter applies to the design, construction, installation, tests and trials of machinery systems and associated equipment, boilers and pressure vessels, piping systems and manoeuvring systems installed on board classed offshore units, as indicated in each Section of this Chapter and as far as class is concerned only.

For self-propelled units, refer to the applicable requirements of the Ship Rules, in particular as regards shafting, propellers and steering gears.

1.2 Documentation to be submitted

1.2.1 Before the actual construction is commenced, the Manufacturer, Designer or Builder is to submit to the Society the documents (plans, diagrams, specifications and calculations) requested in the relevant Sections of this Chapter.

1.3 Definitions

1.3.1 Machinery spaces of Category A

Machinery spaces of Category A are those spaces and trunks to such spaces which contain:

- *internal combustion machinery used for main propulsion, or*
- *internal combustion machinery used for purposes other than main propulsion where such machinery has in the aggregate a total power output of not less than 375 kW, or*
- *any oil fired boiler or fuel oil unit,* or
- gas generators, incinerators, waste disposal units, etc., which use oil fired equipment.

1.3.2 Machinery spaces

Machinery spaces are all machinery spaces of Category A and all other spaces containing propulsion machinery, boilers, fuel oil units, steam and internal combustion engines, generators and major electrical machinery, oil filling stations, refrigerating, stabilising, ventilation and air conditioning machinery, and similar spaces, and trunks to such spaces.

1.3.3 Fuel oil unit

Fuel oil unit is the equipment used for the preparation of fuel oil for delivery to an oil fired boiler, or equipment used for the preparation for delivery of heated oil to an internal combustion engine, and includes any oil pressure pumps, filters and heaters dealing with oil at a pressure of more than 0,18 N/mm^2.

For the purpose of this definition, inert gas generators are to be considered as oil fired boilers and gas turbines are to be considered as internal combustion engines.

1.3.4 Dead ship condition

Dead ship condition is the condition under which the main propulsion plant, boilers and auxiliaries are not in operation due to the absence of power.

2 Design and construction

2.1 General

2.1.1 *When alternative design or arrangements deviate from the prescriptive provisions of the Code, an engineering analysis, evaluation and approval of the design and arrangements should be carried out in accordance with SOLAS regulation II-1/55 based on the guidelines developed by the Organization.*

Note 1: Refer to the Guidelines on alternative design and arrangements for SOLAS chapters II-1 and III (MSC.1/Circ.1212).

2.1.2 *The machinery requirements of Part D, Chapter 1 provide an acceptable degree of protection from fire or other physical injuries. They apply to both marine and industrial equipment.*

2.1.3 *All machinery, electrical equipment, boilers and other pressure vessels, associated piping systems, fittings and wiring are to be of a design and construction adequate for the service for which they are intended and are to be so installed and protected as to reduce to a minimum any danger to persons on board, due regard being paid to moving parts, hot surfaces and other hazards. The design is to have regard to materials used in construction, and to the marine and industrial purposes for which the equipment is intended, the working conditions and the environmental conditions to which it will be subjected.*

2.2 Availability

2.2.1 *Means are to be provided to ensure that machinery can be brought into operation from the "dead ship" condition without external aid.*

2.2.2 *Consideration is to be given to the consequences of the failure of systems and equipment essential to the safety of the unit.*

2.2.3 *Means are to be provided whereby normal operation of vital systems such as ballast systems in column stabilized units, jacking systems in self-elevating units or control of blow-out preventers, can be sustained or restored even though one of the essential auxiliaries becomes inoperable.*

2.3 Materials, welding and testing

2.3.1 General

Materials, welding and testing procedures are to be in accordance with the requirements of NR216 Rules on Materials and Welding for the Classification of Ships and Offshore Units and those given in the other Sections of this Chapter. In addition, for machinery components fabricated by welding, the requirements given in [2.3.2] apply.

2.3.2 Welded machinery components

Welding processes and welders are to be approved by the Society in accordance with NR216, Chapter 12.

References to welding procedures adopted are to be clearly indicated on the plans submitted for approval.

Joints transmitting loads are to be either:

- full penetration butt-joints welded on both sides, except when an equivalent procedure is approved
- full penetration T- or cruciform joints.

For joints between plates having a difference in thickness greater than 3 mm, a taper having a length of not less than 4 times the difference in thickness is required. Depending on the type of stress to which the joint is subjected, a taper equal to three times the difference in thickness may be accepted.

T-joints on scalloped edges are not permitted.

Lap-joints and T-joints subjected to tensile stresses are to have a throat size of fillet welds equal to 0,7 times the thickness of the thinner plate on both sides.

In the case of welded structures including cast pieces, the latter are to be cast with appropriate extensions to permit connection, through butt-welded joints, to the surrounding structures, and to allow any radiographic and ultrasonic examinations to be easily carried out.

Where required, preheating and stress relieving treatments are to be performed according to the welding procedure specification.

2.4 Power transmission

2.4.1 *All gearing and every shaft and coupling used for transmission of power to machinery are to be designed and constructed so that they will withstand the maximum working stresses to which they will be subjected in all service conditions, taking into account the type of engines by which they are driven or which they form part.*

2.5 Vibrations

2.5.1 Builders and manufacturers are to give *special consideration to the design, construction and installation of* machinery intended for essential services *so that any mode of their vibrations shall not cause undue stresses in this machinery in the normal operating ranges.*

2.6 Operation in inclined position

2.6.1 *Main propulsion machinery and all auxiliary machinery essential to the propulsion and the safety of the unit are to be, as fitted in the unit, designed to operate when the unit is upright and when inclined at any angle of list either way and trim by bow or stern as stated in Tab 1, Tab 2 and Tab 3.*

The Society may permit deviations from angles given in the aforesaid tables, taking into consideration the type, size and service conditions of the unit.

Machinery with a horizontal rotation axis is generally to be fitted on board with such axis arranged alongships. If this is not possible, the Manufacturer is to be informed at the time the machinery is ordered.

2.7 Ambient conditions

2.7.1 Machinery and systems covered by the Rules are to be designed to operate properly under the ambient conditions specified in Tab 4, unless otherwise specified in each Section of this Chapter.

Table 1 : Conditions of inclination for column-stabilized offshore units

Equipment	Propulsion	Angles of inclination (degree)	
		Static	Dynamic
Equipment intended for essential services **(1)**	self-propelled	15 in any direction	22,5 in any direction
	not propelled	15 in any direction	no requirement
Equipment intended for emergency purposes **(2)**	self-propelled	25 in any direction, or the angle of inclination resulting from the worst assumed damaged condition, whichever is the less	no requirement
	not propelled		

(1) Essential services are defined in Ch 2, Sec 1, [4.2].
(2) Emergency services are defined in Ch 2, Sec 1, [4.4].

Table 2 : Conditions of inclination for self-elevating offshore units

Equipment	Propulsion	Angles of inclination (degree) **(3)**	
		Static	Dynamic
Equipment intended for essential services **(1)**	self-propelled	10 in any direction	15 in any direction
	not propelled	10 in any direction	no requirement
Equipment intended for emergency purposes **(2)**	self-propelled	15 in any direction, or the angle of inclination resulting from the worst assumed damaged condition, whichever is the less	no requirement
	not propelled		

(1) Essential services are defined in Ch 2, Sec 1, [4.2].
(2) Emergency services are defined in Ch 2, Sec 1, [4.4].
(3) Higher inclination angles as per Tab 1 may be required for self-elevating units having a rectangular upper pontoon with L/B > 3.

Table 3 : Conditions of inclination for surface offshore units

Equipment	Propulsion	Angles of inclination (degree) **(3)**	
		Static	Dynamic
Equipment intended for essential services **(1)**	self-propelled	5 fore and aft 15 athwartship **(4)**	7,5 fore and aft 22,5 athwartship **(4)**
	not propelled	5 fore and aft 15 athwartship **(4)**	no requirement
Equipment intended for emergency purposes **(2)**	self-propelled	10 fore and aft 22,5 athwartship, or the angle of inclination resulting from the worst assumed damaged condition, whichever is the less	10 fore and aft 22,5 athwartship, or the angle of inclination resulting from the worst assumed damaged condition, whichever is the less
	not propelled		

(1) Essential services are defined in Ch 2, Sec 1, [4.2].
(2) Emergency services are defined in Ch 2, Sec 1, [4.4].
(3) Fore-and-aft and athwartship inclinations may occur simultaneously.
(4) For units having the service notation **liquefied gas storage**, the equipment intended for essential services is to remain operable with the unit flooded to a final athwartship inclination up to a maximum of 30°.

Table 4 : Ambient conditions

AIR TEMPERATURE	
Location, arrangement	Temperature range (°C)
In enclosed spaces	between 0 and +45 **(2)**
On machinery components, boilers In spaces subject to higher or lower temperatures	according to specific local conditions
On exposed decks	between –25 and +45 **(1)**
WATER TEMPERATURE	
Coolant	Temperature (°C)
Sea water or, if applicable, sea water at charge air coolant inlet	up to +32

(1) Electronic appliances are to be designed for an air temperature up to 55°C (for electronic appliances see also Part C, Chapter 2).
(2) Different temperatures may be accepted by the Society in the case of units operating in restricted zones.

2.8 Power of machinery

2.8.1 Unless otherwise stated in each Section of this Chapter, where scantlings of components are based on power, the values to be used are determined as follows:

- for main propulsion machinery, the power/rotational speed for which classification is requested
- for auxiliary machinery, the power/rotational speed which is available in service.

2.9 Safety devices

2.9.1 *Where risk from overspeeding of machinery exists, means are to be provided to ensure that the safe speed is not exceeded.*

2.9.2 *Where main or auxiliary machinery including pressure vessels or any parts of such machinery are subject to internal pressure and may be subject to dangerous overpressure, means shall be provided, where practicable, to protect against such excessive pressure.*

2.9.3 *Machinery, where applicable, is to be provided with automatic shut-off arrangements or alarms in the case of failures, such as lubricating oil supply failure, which could lead rapidly to complete breakdown, damage or explosion.*

The Society may permit provisions for overriding automatic shut-off devices.

See also the specific requirements given in the other Sections of this Chapter.

2.10 Fuels

2.10.1 General

When it is intended to burn fuels having a flashpoint (closed cup test) below 60°C but not less than 43°C, this fact is to be clearly indicated on the submitted documents. Vent heads with flame arresters are to be fitted to vent pipes. Other arrangements are to be specially considered by the Society.

2.10.2 Fuel oils employed for engines and boilers are, in general, to have a flash point (determined using the closed cup test) of not less than 60°C. However, for engines driving emergency generators, fuel oils having a flash point of less than 60°C but not less than 43°C are acceptable.

For units operating in restricted zones, or whenever special precautions are taken to the Society's satisfaction, fuel oils having a flash point of less than 60°C but not less than 43°C may be used for engines and boilers, provided that, from previously effected checks, it is evident that the temperature of spaces where fuel oil is stored or employed will be at least 10°C below the fuel oil flash point at all times.

The use of process gas and crude oil as fuel for boilers or propulsion engines is allowed subject to the requirements of Pt D, Ch 1, Sec 19.

The use of boil-off gas for boilers and propulsion engines is allowed for units complying with the requirement of NR542 Classification of Floating Gas Units.

2.10.3 Machinery and piping systems for the usage of fuel oil having a flashpoint less than 60°C shall also comply with the following:

a) For oil fuel having a flashpoint of less than 60°C but not less than 43°C, oil tanks except those arranged in double bottom compartments shall be located outside of machinery spaces of category A.

b) For oil fuel having a flashpoint of less than 43°C, where permitted, the following provisions are to be complied with:
   - oil tanks are to be located outside machinery spaces and the arrangements adopted have to be specially approved by the Society
   - provisions for the measurement of oil temperature should be provided on the suction pipe of oil fuel pump
   - stop valves and/or cocks are to be provided to the inlet side and outlet side of the oil fuel strainers
   - pipe joints of welded construction or of circular cone type or spherical type union joint are to be applied as much as possible.

2.10.4 Arrangements for the storage and handling of fuel oils intended for helicopters are to comply with the provisions of Ch 4, Sec 10.

3 Arrangement and installation on board

3.1 General

3.1.1 *Adequate provisions and arrangements should be made to facilitate safe access, cleaning, inspection and of machinery, including boilers and pressure vessels.*

Easy access to the various parts of the propulsion machinery is to be provided by means of metallic ladders and gratings fitted with strong and safe handrails.

Spaces containing main and auxiliary machinery are to be provided with adequate lighting and ventilation.

3.1.2 The installation of mechanical equipment and machinery in hazardous areas is to comply with the provisions of Ch 4, Sec 3, [6].

3.2 Ventilation in machinery spaces

3.2.1 Machinery spaces are to be sufficiently ventilated so as to ensure that when machinery or boilers therein are operating at full power in all weather conditions, including heavy weather, a sufficient supply of air is maintained to the spaces for the operation of the machinery.

This sufficient amount of air is to be supplied through suitably protected openings arranged in such a way that they can be used in all weather conditions, taking into account Regulation 19 of the 1966 Load Line Convention.

Special attention is to be paid both to air delivery and extraction and to air distribution in the various spaces. The quantity and distribution of air are to be such as to satisfy machinery requirements for developing maximum continuous power.

The ventilation is to be so arranged as to prevent any accumulation of flammable gases or vapours.

3.3 Air intakes

3.3.1 Air intakes for internal combustion engines are not to be less than 3 m from the hazardous areas as defined in Ch 4, Sec 1, [3.2].

3.4 Hot surfaces and fire protection

3.4.1 Surfaces, having temperature exceeding 60°C, with which the crew are likely to come into contact during operation are to be suitably protected or insulated.

Surfaces of machinery with temperatures above 220°C, e.g. steam, thermal oil and exhaust gas lines, silencers, exhaust gas boilers and turbochargers, are to be effectively insulated with non-combustible material or equivalently protected to prevent the ignition of combustible materials coming into contact with them. Where the insulation used for this purpose is oil absorbent or may permit the penetration of oil, the insulation is to be encased in steel sheathing or equivalent material.

Fire protection, detection and extinction is to comply with the requirements of Part C, Chapter 4.

3.5 Safety devices on moving parts

3.5.1 Suitable protective devices on access restrictions are to be provided in way of moving parts (flywheels, couplings, etc.) in order to avoid accidental contact of personnel with moving parts.

3.6 Gauges

3.6.1 All gauges are to be grouped, as far as possible, near each manoeuvring position; in any event, they are to be clearly visible.

3.7 Bolting down

3.7.1 Bedplates of machinery are to be securely fixed to the supporting structures by means of foundation bolts which are to be distributed as evenly as practicable and of a sufficient number and size so as to ensure proper fitting.

Where the bedplates bear directly on the inner bottom plating, the bolts are to be fitted with suitable gaskets so as to ensure a tight fit and are to be arranged with their heads within the double bottom.

Continuous contact between bedplates and foundations along the bolting line is to be achieved by means of chocks of suitable thickness, carefully arranged to ensure a complete contact.

3.7.2 Chocking resins are to be type approved.

3.7.3 Where stays are provided for fixing the upper part of engines to the unit's structure in order, for example, to reduce the amplitude of engine vibrations, such stays are to be so designed as to prevent damage to these engines further to deformation of the shell plating in way of the said stays. The stays are to be connected to the hull in such a way as to avoid abnormal local loads on the structure of the unit.

3.8 Gratings

3.8.1 Gratings in engine rooms are to be metallic, divided into easily removable panels.

3.9 Machinery remote control, alarms and safety systems

3.9.1 For remote control systems of main propulsion machinery and essential auxiliary machinery and relevant alarms and safety systems, the requirements of Part C, Chapter 3 apply.

3.9.2 *An engineers' alarm shall be provided to be operated from the engine control room or at the manoeuvring platform as appropriate, and shall be clearly audible in the engineers' accommodation.*

3.10 Communications

3.10.1 *At least two independent means are to be provided for communicating orders from the navigating bridge to the position in the machinery space or in the control room from which the speed and the direction of the thrust of the propellers are normally controlled; one of these is to be an engine room telegraph, which provides visual indication of the orders and responses both in the machinery space and on the navigating bridge,* with audible alarm mismatch between order and response.

Appropriate means of communication shall be provided from the navigating bridge and the engine room to any other position from which the speed and direction of thrust of the propellers may be controlled.

The second means for communicating orders is to be fed by an independent power supply and is to be independent of other means of communication.

Where the main propulsion system of the unit is controlled from the navigating bridge by a remote control system, the second means of communication may be the same bridge control system.

The engine room telegraph is required in any case, even if the remote control of the engine is foreseen, irrespective of whether the engine room is attended.

For units operating in restricted zones, these requirements may be relaxed at the Society's discretion.

4 Tests and trials

4.1 Works tests

4.1.1 Equipment and its components are subjected to works tests which are detailed in the relevant Sections of this Chapter. The Surveyor is to be informed in advance of these tests.

Where such tests cannot be performed in the workshop, the Society may allow them to be carried out on board, provided this is not judged to be in contrast either with the general characteristics of the machinery being tested or with particular features of the installation. In such cases, the Surveyor is to be informed in advance and the tests are to be carried out in accordance with the provisions of NR216 relative to incomplete tests.

All boilers, all parts of machinery, all steam, hydraulic, pneumatic and other systems and their associated fittings which are under internal pressure shall be subjected to appropriate tests including a pressure test before being put into service for the first time as detailed in the other Sections of this Chapter.

4.2 Trials on board

4.2.1 Trials on board of machinery are detailed in Ch 1, Sec 11.

Section 2 Diesel Engines

1 General

1.1 Application

1.1.1 Diesel engines listed below are to be designed, constructed, installed, tested and certified in accordance with the requirements of this Section, under the supervision and to the satisfaction of the Society's Surveyors:

a) main propulsion engines

b) engines driving electric generators, including emergency generators

c) engines driving other auxiliaries essential for the safety of the unit, when they develop a power of 110 kW and over.

All other engines are to be designed and constructed according to sound marine practice and delivered with the relevant works' certificate (see NR216, Ch 1, Sec 1, [4.2.3]).

Engines intended for propulsion of lifeboats and compression ignition engines intended for propulsion of rescue boats are to comply with the relevant Rule requirements.

Engines intended to be used in hazardous areas are to comply with the provisions of Article [5] and Ch 4, Sec 3, [6].

Additional requirements for control and safety systems for dual fuel engines are given in Ch 1, App 4 and Pt C, Ch 1, App 2 of the Ship Rules.

Requirements for turbochargers are given in Pt C, Ch 1, Sec 17 of the Ship Rules.

1.2 Documentation flow for diesel engine

1.2.1 Document flow for obtaining a type approval certificate

- For the initial engine type, the engine designer prepares the documentation in accordance with requirements in Tab 1 and Tab 2 and forwards to the Society according to the agreed procedure for review.
- Upon review and approval of the submitted documentation (evidence of approval), it is returned to the engine designer.
- The engine designer arranges for a Surveyor to attend an engine type test and upon satisfactory testing the Society issues a type approval certificate.

1.2.2 Document flow for engine certificate

a) The engine type must have a type approval certificate. For the first engine of a type, the type approval process and the engine certification process (ECP) may be performed simultaneously.

b) Engines to be installed in specific applications may require the engine designer/licensor to modify the design or performance requirements. The modified drawings are forwarded by the engine designer to the engine builder/licensee to develop production documentation for use in the engine manufacture in accordance with Tab 3.

c) The engine builder/licensee develops a comparison list of the production documentation to the documentation listed in Tab 1 and Tab 2.

   If there are differences in the technical content on the licensee's production drawings/documents compared to the corresponding licensor's drawings, the licensee must obtain agreement to such differences from the licensor.

   If the designer acceptance is not confirmed, the engine is to be regarded as a different engine type and is to be subjected to the complete type approval process by the licensee.

d) The engine builder/licensee submits the comparison list and the production documentation to the Society according to the agreed procedure for review/approval.

e) The Society returns documentation to the engine builder/licensee with confirmation that the design has been approved. This documentation is intended to be used by the engine builder/licensee and their subcontractors and attending Surveyors. As the attending Surveyors may request the engine builder/licensee or their subcontractors to provide the actual documents indicated in the list, the documents are necessary to be prepared and available for the Surveyors.

f) The attending Surveyors, at the engine builder/licensee/subcontractors, will issue product certificates as necessary for components manufactured upon satisfactory inspections and tests.

g) The engine builder/licensee assembles the engine, tests the engine with a Surveyor present. An engine certificate is issued by the Surveyor upon satisfactory completion of assembly and tests.

1.2.3 Approval of diesel engine components

Components of engine designer's design which are covered by the type approval certificate of the relevant engine type are regarded as approved whether manufactured by the engine manufacturer or sub-supplied. For components of subcontractor's design, necessary approvals are to be obtained by the relevant suppliers (e.g. exhaust gas turbochargers, charge air coolers, etc.).

Table 1 : Document to be submitted for information, as applicable

No.	Item
1	Engine particulars (e.g. Data sheet with general engine information, Project Guide, Marine Installation Manual)
2	Engine cross section
3	Engine longitudinal section
4	Bedplate and crankcase of cast design
5	Thrust bearing assembly **(1)**
6	Frame/framebox/gearbox of cast design **(2)**
7	Tie rod
8	Connecting rod
9	Connecting rod, assembly **(3)**
10	Crosshead, assembly **(3)**
11	Piston rod, assembly **(3)**
12	Piston, assembly **(3)**
13	Cylinder jacket/ block of cast design **(2)**
14	Cylinder cover, assembly **(3)**
15	Cylinder liner
16	Counterweights (if not integral with crankshaft), including fastening
17	Camshaft drive, assembly **(3)**
18	Flywheel
19	Fuel oil injection pump
20	Shielding and insulation of exhaust pipes and other parts of high temperature which may be impinged as a result of a fuel system failure, assembly
	For electronically controlled engines, construction and arrangement of:
21	• Control valves
22	• High-pressure pumps
23	• Drive for high pressure pumps
24	Operation and service manuals **(4)**
25	FMEA (for engine control system) **(5)**
26	Production specifications for castings and welding (sequence)
27	Evidence of quality control system for engine design and in service maintenance
28	Quality requirements for engine production
29	Type approval certification for environmental tests, control components **(6)**

(1) If integral with engine and not integrated in the bedplate.
(2) Only for one cylinder or one cylinder configuration.
(3) Including identification (e.g. drawing number) of components.
(4) Operation and service manuals are to contain maintenance requirements (servicing and repair) including details of any special tools and gauges that are to be used with their fitting/settings together with any test requirements on completion of maintenance.
(5) Where engines rely on hydraulic, pneumatic or electronic control of fuel injection and/or valves, a failure mode and effects analysis (FMEA) is to be submitted to demonstrate that failure of the control system will not result in the operation of the engine being degraded beyond acceptable performance criteria for the engine.
(6) Tests are to demonstrate the ability of the control, protection and safety equipment to function as intended under the specified testing conditions (see Ch 3, Sec 6, [2]).

Table 2 : Documentation to be submitted for approval, as applicable

No.	Item
1	Bedplate and crankcase of welded design, with welding details and welding instructions **(1) (2)**
2	Thrust bearing bedplate of welded design, with welding details and welding instructions **(1)**
3	Bedplate/oil sump welding drawings **(1)**
4	Frame/framebox/gearbox of welded design, with welding details and instructions **(1) (2)**
5	Engine frames, welding drawings **(1) (2)**
6	Crankshaft, details, each cylinder No.
7	Crankshaft, assembly, each cylinder No.
8	Crankshaft calculations (for each cylinder configuration) according to the attached data sheet and Ship rules Pt C, Ch 1, App1
9	Thrust shaft or intermediate shaft (if integral with engine)
10	Shaft coupling bolts
11	Material specifications of main parts with information on non-destructive material tests and pressure tests **(3)**
	Schematic layout or other equivalent documents on the engine of:
12	• Starting air system
13	• Fuel oil system
14	• Lubricating oil system
15	• Cooling water system
16	• Hydraulic system
17	• Hydraulic system (for valve lift)
18	• Engine control and safety system
19	Shielding of high pressure fuel pipes, assembly **(4)**
20	Construction of accumulators (for electronically controlled engine)
21	Construction of common accumulators (for electronically controlled engine)
22	Arrangement and details of the crankcase explosion relief valve (see [2.3]) **(5)**
23	Calculation results for crankcase explosion relief valves ([2.3])
24	Details of the type test program and the type test report) **(6)**
25	High pressure parts for fuel oil injection system **(7)**
26	Oil mist detection and/or alternative alarm arrangements (see [2.3])
27	Details of mechanical joints of piping systems (Ch 1, Sec 7, [2.5])
28	Documentation verifying compliance with inclination limits (see Ch 1, Sec 1, [2.6])
29	Documents as required in Ch 3, Sec 3, as applicable

(1) For approval of materials and weld procedure specifications. The weld procedure specification is to include details of pre and post weld heat treatment, weld consumables and fit-up conditions.
(2) For each cylinder for which dimensions and details differ.
(3) For comparison with Society requirements for material, NDT and pressure testing as applicable.
(4) All engines.
(5) Only for engines of a cylinder diameter of 200 mm or more or a crankcase volume of 0,6 m^3 or more.
(6) The type test report may be submitted shortly after the conclusion of the type test.
(7) The documentation to contain specifications for pressures, pipe dimensions and materials.

Table 3 : Documentation for the inspection of components and systems

No.	Item
1	Engine particulars
2	Material specifications of main parts with information on non-destructive material tests and pressure tests **(1)**
3	Bedplate and crankcase of welded design, with welding details and welding instructions **(2)**
4	Thrust bearing bedplate of welded design, with welding details and welding instructions **(2)**
5	Frame/framebox/gearbox of welded design, with welding details and instructions **(2)**
6	Crankshaft, assembly and details
7	Thrust shaft or intermediate shaft (if integral with engine)
8	Shaft coupling bolts
9	Bolts and studs for main bearings
10	Bolts and studs for cylinder heads and exhaust valve (two stroke design)
11	Bolts and studs for connecting rods
12	Tie rods
	Schematic layout or other equivalent documents on the engine of: **(3)**
13	• Starting air system
14	• Fuel oil system
15	• Lubricating oil system
16	• Cooling water system
17	• Hydraulic system
18	• Hydraulic system (for valve lift)
19	• Engine control and safety system
20	Shielding of high pressure fuel pipes, assembly **(4)**
21	Construction of accumulators for hydraulic oil and fuel oil
22	High pressure parts for fuel oil injection system **(5)**
23	Arrangement and details of the crankcase explosion relief valve (see [2.3]) **(6)**
24	Oil mist detection and/or alternative alarm arrangements (see [2.3])
25	Cylinder head
26	Cylinder block, engine block
27	Cylinder liner
28	Counterweights (if not integral with crankshaft), including fastening
29	Connecting rod with cap
30	Crosshead
31	Piston rod
32	Piston, assembly **(7)**
33	Piston head
34	Camshaft drive, assembly **(7)**
35	Flywheel

(1) For comparison with Society requirements for material, NDT and pressure testing as applicable.
(2) For approval of materials and weld procedure specifications. The weld procedure specification is to include details of pre and post weld heat treatment, weld consumables and fit-up conditions.
(3) Details of the system so far as supplied by the engine manufacturer such as: main dimensions, operating media and maximum working pressures.
(4) All engines.
(5) The documentation to contain specifications for pressures, pipe dimensions and materials.
(6) Only for engines of a cylinder diameter of 200 mm or more or a crankcase volume of 0,6 m^3 or more.
(7) Including identification (e.g. drawing number) of components.
(8) Operation and service manuals are to contain maintenance requirements (servicing and repair) including details of any special tools and gauges that are to be used with their fitting/settings together with any test requirements on completion of maintenance.
(9) Required for engines that rely on hydraulic, pneumatic or electronic control of fuel injection and/or valves.
(10) Documents modified for a specific application are to be submitted to the Society for information or approval, as applicable. See [1.2.2], item b).

No.	Item
36	Arrangement of foundation (for main engines only)
37	Fuel oil injection pump
38	Shielding and insulation of exhaust pipes and other parts of high temperature which may be impinged as a result of a fuel system failure, assembly
39	Construction and arrangement of dampers
	For electronically controlled engines, assembly drawings or arrangements of:
40	• Control valves
41	• High-pressure pumps
42	• Drive for high pressure pumps
43	• Valve bodies, if applicable
44	Operation and service manuals **(8)**
45	Test program resulting from FMEA (for engine control system) **(9)**
46	Production specifications for castings and welding (sequence)
47	Type approval certification for environmental tests, control components **(10)**
48	Quality requirements for engine production

(1) For comparison with Society requirements for material, NDT and pressure testing as applicable.
(2) For approval of materials and weld procedure specifications. The weld procedure specification is to include details of pre and post weld heat treatment, weld consumables and fit-up conditions.
(3) Details of the system so far as supplied by the engine manufacturer such as: main dimensions, operating media and maximum working pressures.
(4) All engines.
(5) The documentation to contain specifications for pressures, pipe dimensions and materials.
(6) Only for engines of a cylinder diameter of 200 mm or more or a crankcase volume of 0,6 m^3 or more.
(7) Including identification (e.g. drawing number) of components.
(8) Operation and service manuals are to contain maintenance requirements (servicing and repair) including details of any special tools and gauges that are to be used with their fitting/settings together with any test requirements on completion of maintenance.
(9) Required for engines that rely on hydraulic, pneumatic or electronic control of fuel injection and/or valves.
(10) Documents modified for a specific application are to be submitted to the Society for information or approval, as applicable. See [1.2.2], item b).

1.3 Definitions

1.3.1 Engine type

In general, the type of an engine is defined by the following characteristics:

- the cylinder diameter
- the piston stroke
- the method of injection (direct or indirect injection)
- the kind of fuel (liquid, gaseous or dual-fuel)
- the working cycle (4-stroke, 2-stroke)
- the gas exchange (naturally aspirated or supercharged)
- the maximum continuous power per cylinder at the corresponding speed and/or brake mean effective pressure corresponding to the above-mentioned maximum continuous power
- the method of pressure charging (pulsating system or constant pressure system)
- the charging air cooling system (with or without intercooler, number of stages, etc.)
- the cylinder arrangement (in-line or V-type).

1.3.2 Engine power

The maximum continuous power is the maximum power at ambient reference conditions (see [1.3.3]) which the engine is capable of delivering continuously, at nominal maximum speed, in the period of time between two consecutive overhauls.

Power, speed and the period of time between two consecutive overhauls are to be stated by the Manufacturer and agreed by the Society.

The rated power is the maximum power at ambient reference conditions (see [1.3.3]) which the engine is capable of delivering as set after works trials (fuel stop power) at the maximum speed allowed by the governor.

The rated power for engines driving electric generators is the nominal power, taken at the net of overload, at ambient reference conditions (see [1.3.3]), which the engine is capable of delivering as set after the works trials (see [4.3]).

1.3.3 Ambient reference conditions

The power of engines as per [1.1.1] items a), b) and c) is to be referred to the following conditions:

- barometric pressure = 0,1 MPa
- relative humidity = 60%
- ambient air temperature = 45°C
- sea water temperature (and temperature at inlet of sea water cooled charge air cooler) = 32°C.

In the case of units operating in restricted zones, different temperatures may be accepted by the Society.

The engine Manufacturer is not expected to provide the above ambient conditions at a test bed. The rating is to be adjusted according to a recognised standard accepted by the Society.

1.3.4 Same type of engines

Two diesel engines are considered to be of the same type when they do not substantially differ in design and construction characteristics, such as those listed in the engine type definition as per [1.3.1], it being taken for granted that the documentation concerning the essential engine components listed in Tab 1, Tab 2 and Tab 3, and associated materials employed has been submitted, examined and, where necessary, approved by the Society.

1.3.5 Substantive modifications or major modifications or major changes

Design modifications, which lead to alterations in the stress levels, operational behaviour, fatigue life or an effect on other components or characteristics of importance such as emissions.

1.3.6 Low, medium and high-speed engines

Low-Speed Engines means diesel engines having a rated speed of less than 300 rpm.

Medium-Speed Engines means diesel engines having a rated speed of 300 rpm and above, but less than 1400 rpm.

High-Speed Engines means diesel engines having a rated speed of 1400 rpm and above.

2 Design and construction

2.1 Materials and welding

2.1.1 Crankshaft materials

In general, crankshafts are to be of forged steel having a tensile strength not less than 400 N/mm^2 and not greater than 1000 N/mm^2.

The use of forged steels of higher tensile strength is subject to special consideration by the Society in each case.

The Society, at its discretion and subject to special conditions (such as restrictions in operating zones), may accept crankshafts made of cast carbon steel, cast alloyed steel of appropriate quality and manufactured by a suitable procedure having a tensile strength as follows:

a) between 400 N/mm^2 and 560 /mm^2 for cast carbon steel

b) between 400 N/mm^2 and 700 N/mm^2 for cast alloyed steel.

The Society, at its discretion and subject to special conditions (such as restrictions in ship navigation), may also accept crankshafts made of cast iron for engines of a nominal power not exceeding 110 kW with a significative in service behaviour either in marine or industry. The cast iron is to be of “SG” type (spheroidal graphite) of appropriate quality and manufactured by a suitable procedure.

2.1.2 Welded frames and foundations

Steels used in the fabrication of welded frames and bedplates are to comply with the requirements of NR216.

Welding is to be in accordance with the requirements of Ch 1, Sec 1, [2.3].

2.2 Crankshaft

2.2.1 Check of the scantling

The check of crankshaft strength is to be carried out in accordance with Pt C, Ch 1, App 1 of the Ship Rules.

2.3 Crankcase

2.3.1 Strength

Crankcase construction and crankcase doors are to be of sufficient strength to withstand anticipated crankcase pressures that may arise during a crankcase explosion taking into account the installation of explosion relief valves required by [2.3.4]. Crankcase doors are to be fastened sufficiently securely for them not be readily displaced by a crankcase explosion.

2.3.2 Ventilation and drainage

Ventilation of crankcase, and any arrangement which could produce a flow of external air within the crankcase, is in principle not permitted.

Vent pipes, where provided, are to be as small as practicable. If provision is made for the forced extraction of gases from the crankcase (e.g. for detection of explosive mixtures), the vacuum in the crankcase is not to exceed:

$2,5\ 10^{-4}$ MPa

To avoid interconnection between crankcases and the possible spread of fire following an explosion, crankcase ventilation pipes and oil drain pipes for each engine are to be independent of any other engine.

2.3.3 Warning notice

A warning notice is to be fitted, preferably on a crankcase door on each side of the engine, or alternatively on the control stand.

This warning notice is to specify that whenever overheating is suspected in the crankcase, the crankcase doors or sight holes are not to be opened until a reasonable time has elapsed after stopping the engine, sufficient to permit adequate cooling of the crankcase.

2.3.4 Crankcase explosion relief valves

a) Diesel engines of a cylinder diameter of 200 mm and above or a crankcase gross volume of 0,6 m^3 and above are to be provided with crankcase explosion relief valves in accordance with the following requirements.

b) Engines having a cylinder bore not exceeding 250 mm, are to have at least one valve near each end, but over eight crankthrows, an additional valve is to be fitted near the middle of the engine.

   Engines having a cylinder bore exceeding 250 mm, but not exceeding 300 mm, are to have at least one valve in way of each alternate crankthrow, with a minimum of two valves.

   Engines having a cylinder bore exceeding 300 mm are to have at least one valve in way of each main crankthrow.

c) Additional relief valves are to be fitted on separate spaces of the crankcase, such as gear or chain cases for camshaft or similar drives, when the gross volume of such spaces is 0,6 m^3 or above. Scavenge spaces in open connection to the cylinders are to be fitted with explosion relief valves.

d) The free area of each relief valve is not to be less than 45 cm^2.

e) The combined free area of the valves fitted on an engine is not to be less than 115 cm^2 per cubic metre of the crankcase gross volume.

Note 1: The total volume of the stationary parts within the crankcase may be discounted in estimating the crankcase gross volume (rotating and reciprocating components are to be included in the gross volume).

f) Crankcase explosion relief valves are to be provided with lightweight spring-loaded valve discs or other quick-acting and self closing devices to relieve a crankcase of pressure in the event of an internal explosion and to prevent any inrush of air thereafter.

g) The valve discs in crankcase explosion relief valves are to be made of ductile material capable of withstanding the shock of contact with stoppers at the full open position.

h) Crankcase explosion relief valves are to be designed and constructed to open quickly and to be fully open at a pressure not greater than 0,02 MPa.

i) Crankcase explosion relief valves are to be provided with a flame arrester that permits flow for crankcase pressure relief and prevents passage of flame following a crankcase explosion.

j) Crankcase explosion relief valves are to be type tested in a configuration that represents the installation arrangements that will be used on an engine.

   The purpose of type testing crankcase explosion valves is to:

   1) verify the effectiveness of the flame arrester
   2) verify that the valve closes after an explosion
   3) verify that the valve is gas/air tight after an explosion
   4) establish the level of overpressure protection provided by the valve.

   Where crankcase relief valves are provided with arrangements for shielding emissions from the valve following an explosion, the valve is to be type tested to demonstrate that the shielding does not adversely affect the operational effectiveness of the valve.

   Type testing procedure is to comply with Ch 1, App 2.

k) Crankcase explosion relief valves are to be provided with a copy of the manufacturer's installation and maintenance manual that is pertinent to the size and type of valve being supplied for installation on a particular engine. The manual is to contain the following information:

   - description of valve with details of function and design limits
   - copy of type test certification
   - installation instructions
   - maintenance in service instructions to include testing and renewal of any sealing arrangements
   - actions required after a crankcase explosion.

l) A copy of the installation and maintenance manual required in k) above is to be provided on board the unit.

m) Valves are to be provided with suitable markings that include the following information:
- name and address of manufacturer
- designation and size
- month / year of manufacture
- approved installation orientation.

2.3.5 Oil mist detection

a) Oil mist detection arrangements (or engine bearing temperature monitors or equivalent devices) are required:
- for alarm and slow down purposes for low speed diesel engines of 2250 kW and above or having cylinders of more than 300 mm bore
- for alarm and automatic shutoff purposes for medium and high speed diesel engines of 2250 kW and above or having cylinders of more than 300 mm bore.

Oil mist detection arrangements are to be of a type approved and tested in accordance with Pt C, Ch 3, App 1 of the Ship Rules, and comply with items b) and c) below. Engine bearing temperature monitors or equivalent devices used as safety devices have to be of a type approved by the Society for such purposes.

Note 1: An equivalent device for high speed engines could be interpreted as measures applied to high speed engines where specific design features to preclude the risk of crankcase explosions are incorporated.

b) The oil mist detection system and arrangements are to be installed in accordance with the engine designer's and oil mist manufacturer's instructions/recommendations. The following particulars are to be included in the instructions:
- schematic layout of engine oil mist detection and alarm system showing location of engine crankcase sample points and piping or cable arrangements together with pipe dimensions to detector
- evidence of study to justify the selected location of sample points and sample extraction rate (if applicable) in consideration of the crankcase arrangements and geometry and the predicted crankcase atmosphere where oil mist can accumulate
- the manufacturer's maintenance and test manual
- information relating to type or in-service testing of the engine with engine protection system test arrangements having approved types of oil mist detection equipment.

c) A copy of the oil mist detection equipment maintenance and test manual required by b) is to be provided on board unit.

d) Oil mist detection and alarm information is to be capable of being read from a safe location away from the engine.

e) Each engine is to be provided with its own independent oil mist detection arrangement and a dedicated alarm.

f) Oil mist detection and alarm systems are to be capable of being tested on the test bed and board under engine at standstill and engine running at normal operating conditions in accordance with test procedures that are acceptable to the Society.

g) The oil mist detection arrangements are to provide an alarm indication in the event of a foreseeable functional failure in the equipment and installation arrangements.

h) The oil mist detection system is to provide an indication that any lenses fitted in the equipment and used in determination of the oil mist level have been partially obscured to a degree that will affect the reliability of the information and alarm indication.

i) Where oil mist detection equipment includes the use of programmable electronic systems, the arrangements are to be in accordance with the Society requirements for such systems.

j) Plans of showing details and arrangements of oil mist detection and alarm arrangements are to be submitted for approval in accordance with Tab 2 under item 18.

k) The equipment together with detectors is to be tested when installed on the test bed and on board unit to demonstrate that the detection and alarm system functionally operates. The testing arrangements are to be to the satisfaction of the Society.

l) Where sequential oil mist detection arrangements are provided the sampling frequency and time is to be as short as reasonably practicable.

m) Where alternative methods are provided for the prevention of the build-up of oil mist that may lead to a potentially explosive condition within the crankcase details are to be submitted for consideration of the Society. The following information is to be included in the details to be submitted for consideration:
- engine particulars – type, power, speed, stroke, bore and crankcase volume
- details of arrangements prevent the build up of potentially explosive conditions within the crankcase, e.g. bearing temperature monitoring, oil splash temperature, crankcase pressure monitoring, recirculation arrangements
- evidence to demonstrate that the arrangements are effective in preventing the build up of potentially explosive conditions together with details of in-service experience
- operating instructions and the maintenance and test instructions.

n) Where it is proposed to use the introduction of inert gas into the crankcase to minimise a potential crankcase explosion, details of the arrangements are to be submitted to the Society for consideration.

2.4 Scavenge manifolds

2.4.1 Fire extinguishing

For two-stroke crosshead type engines, scavenge spaces in open connection (without valves) to the cylinders are to be connected to a fixed fire-extinguishing system, which is to be entirely independent of the fire-extinguishing system of the machinery space.

2.4.2 Blowers

Where a single two-stroke propulsion engine is equipped with an independently driven blower, alternative means to drive the blower or an auxiliary blower are to be provided ready for use.

2.4.3 Relief valves

Scavenge spaces in open connection to the cylinders are to be fitted with explosion relief valves in accordance with [2.3.4].

2.5 Systems

2.5.1 General

In addition to the requirements of the present sub-article, those given in Ch 1, Sec 7 are to be satisfied.

Flexible hoses in the fuel and lubricating oil system are to be limited to the minimum and are to be type approved.

Unless otherwise stated in Ch 1, Sec 7, propulsion engines are to be equipped with external connections for standby pumps for:

- fuel oil supply
- lubricating oil and cooling water circulation.

2.5.2 Fuel oil system

a) Relief valves discharging back to the suction of the pumps or other equivalent means are to be fitted on the delivery side of the pumps.

In fuel oil systems for propulsion machinery, filters are to be fitted and arranged so that an uninterrupted supply of filtered fuel oil is ensured during cleaning operations of the filter equipment, except when otherwise stated in Ch 1, Sec 7.

b) All external high pressure fuel delivery lines between the high pressure fuel pumps and fuel injectors are to be protected with a jacketed piping system capable of containing fuel from a high pressure line failure.

A jacketed pipe incorporates an outer pipe into which the high pressure fuel pipe is placed, forming a permanent assembly.

The jacketed piping system is to include a means for collection of leakages and arrangements are to be provided with an alarm in case of a fuel line failure.

If flexible hoses are used for jacketing purposes, these are to be approved by the Society.

When in fuel oil return piping the pulsation of pressure with peak to peak values exceeds 2 MPa, jacketing of this piping is also required as above.

c) For units operating in restricted zones, the requirements given in a) may be relaxed at the Society's discretion.

2.5.3 Lubricating oil system

Efficient filters are to be fitted in the lubricating oil system when the oil is circulated under pressure.

In such lubricating oil systems for propulsion machinery, filters are to be arranged so that an uninterrupted supply of filtered lubricating oil is ensured during cleaning operations of the filter equipment, except when otherwise stated in Ch 1, Sec 7.

Relief valves discharging back to the suction of the pumps or other equivalent means are to be fitted on the delivery side of the pumps.

The relief valves may be omitted provided that the filters can withstand the maximum pressure that the pump may develop.

Where necessary, the lubricating oil is to be cooled by means of suitable coolers.

2.5.4 Charge air system

a) Requirements relevant to design, construction, arrangement, installation, tests and certification of exhaust gas turbochargers are given in Pt C, Ch 1, Sec 14 of the Ship Rules.

b) When two-stroke propulsion engines are supercharged by exhaust gas turbochargers which operate on the impulse system, provision is to be made to prevent broken piston rings entering turbocharger casings and causing damage to blades and nozzle rings.

2.6 Starting air system

2.6.1 The requirements given in [3.1] apply.

2.7 Control and monitoring

2.7.1 General

In addition to those of this item, the general requirements given in Part C, Chapter 3 apply.

2.7.2 Alarm

The lubricating oil system of diesel engines with a power equal to or in excess of 37 kW is to be fitted with alarms to give audible and visual warning in the event of an appreciable reduction in pressure of the lubricating oil supply.

2.7.3 Governors of main and auxiliary engines

Each engine, except the auxiliary engines for driving electric generators for which [2.7.5] applies, is to be fitted with a speed governor so adjusted that the engine does not exceed the rated speed by more than 15%.

2.7.4 Overspeed protective devices of main and auxiliary engines

In addition to the speed governor:

- each main propulsion engine having a rated power of 220 kW and above, which can be declutched or which drives a controllable pitch propeller, and
- each auxiliary engine having a rated power of 220 kW and above, except those for driving electric generators, for which [2.7.6] applies,

is to be fitted with a separate overspeed protective device so adjusted that the engine cannot exceed the rated speed n by more than 20%; arrangements are to be made to test the overspeed protective device.

Equivalent arrangements may be accepted subject to special consideration by the Society in each case.

The overspeed protective device, including its driving mechanism or speed sensor, is to be independent of the governor.

2.7.5 Governors for auxiliary engines driving electric generators

a) Auxiliary engines intended for driving electric generators of the main and emergency sources of electrical power are to be fitted with a speed governor which will prevent transient frequency variations in the electrical network in excess of ±10% of the rated frequency with a recovery time to steady state conditions not exceeding 5 seconds, when the maximum electrical step load is switched on or off.

   In the case when a step load equivalent to the rated output of a generator is switched off, a transient speed variation in excess of 10% of the rated speed may be acceptable, provided this does not cause the intervention of the overspeed device as required by [2.7.4].

b) At all loads between no load and rated power, the permanent speed variation is not to be more than 5% of the rated speed.

c) Prime movers are to be selected in such a way that they meet the load demand within the unit's mains and, when running at no load, can satisfy the requirement in item a) above if suddenly loaded to 50% of the rated power of the generator, followed by the remaining 50% after an interval sufficient to restore speed to steady state. Steady state conditions (see Note 1) are to be achieved in not more than 5 s.

Note 1: Steady state conditions are those at which the envelope of speed variation does not exceed ±1% of the declared speed at the new power.

d) Application of the electrical load in more than 2 load steps can only be allowed if the conditions within the unit's mains permit the use of those auxiliary engines which can only be loaded in more than 2 load steps (see Fig 1 for guidance) and provided that this is already allowed for in the designing stage.

   This is to be verified in the form of system specifications to be approved and to be demonstrated at unit's trials. In this case, due consideration is to be given to the power required for the electrical equipment to be automatically switched on after blackout and to the sequence in which it is connected.

   This also applies to generators to be operated in parallel and where the power is to be transferred from one generator to another, in the event that any one generator is to be switched off.

e) Emergency generator sets must satisfy the governor conditions as per items a) and b) even when:

   - their total consumer load is applied suddenly, or
   - their total consumer load is applied in steps, subject to the maximum step load is declared and demonstrated.

f) For alternating current generating sets operating in parallel, the governing characteristics of the prime movers are to be such that, within the limits of 20% and 100% total load, the load on any generating set will not normally differ from its proportionate share of the total load by more than 15% of the rated power in kW of the largest machine or 25% of the rated power in kW of the individual machine in question, whichever is the lesser.

   For alternating current generating sets intended to operate in parallel, facilities are to be provided to adjust the governor sufficiently finely to permit an adjustment of load not exceeding 5% of the rated load at normal frequency.

Figure 1 : Reference values for maximum possible sudden power increases P as a function of brake mean effective pressure, P_{me}, at declared power (four-stroke diesel engines)

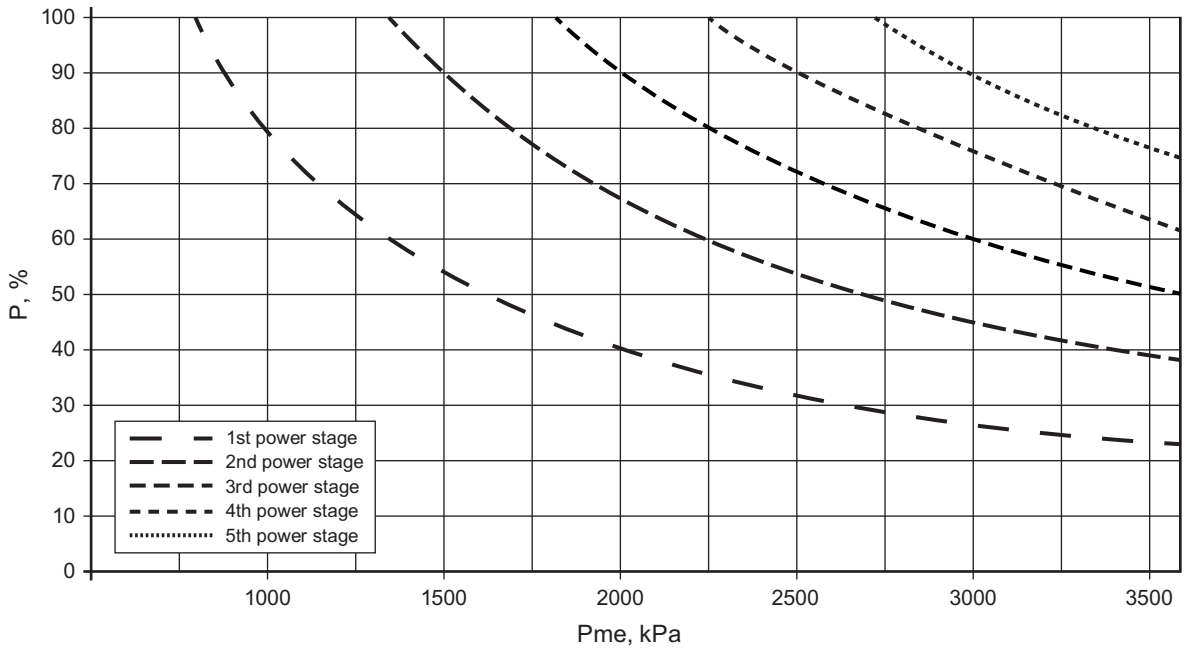

2.7.6 Overspeed protective devices of auxiliary engines driving electric generators

In addition to the speed governor, auxiliary engines of rated power equal to or greater than 220 kW driving electric generators are to be fitted with a separate overspeed protective device, with a means for manual tripping, adjusted so as to prevent the rated speed from being exceeded by more than 15%.

This device is to automatically shut down the engine.

2.7.7 Use of electronic governors

a) Type approval

Electronic governors and their actuators are to be type approved by the Society.

b) Electronic governors for main propulsion engines

If an electronic governor is fitted to ensure continuous speed control or resumption of control after a fault, an additional separate governor is to be provided unless the engine has a manually operated fuel admission control system suitable for its control.

A fault in the governor system is not to lead to sudden major changes in propulsion power or direction of propeller rotation.

Alarms are to be fitted to indicate faults in the governor system.

The acceptance of electronic governors not in compliance with the above requirements will be considered by the Society on a case by case basis, when fitted on units with two or more main propulsion engines.

c) Electronic governors for auxiliary engines driving electric generators

In the event of a fault in the electronic governor system the fuel admission is to be set to “zero”.

Alarms are to be fitted to indicate faults in the governor system.

The acceptance of electronic governors fitted on engines driving emergency generators will be considered by the Society on a case by case basis.

2.7.8 Summary tables

Diesel engines installed on units without automation notations are to be equipped with monitoring equipment as detailed in Tab 4 or Tab 5 for main propulsion, in Tab 6 for auxiliary services and in Tab 7 for emergency respectively.

For small units, units operating in restricted zones or platforms installed in sheltered coastal areas, the acceptance of a reduction in the monitoring equipment required in Tab 4, Tab 5 and Tab 6 may be considered.

The alarms are to be visual and audible.

The indicators are to be fitted at a normally attended position (on the engine or at the local control station).

Table 4 : Monitoring of main propulsion cross-head (slow speed) diesel engines

Symbol convention H = High, HH = High high, G = group alarm L = Low, LL = Low low, I = individual alarm X = function is required, R = remote	Monitoring		Automatic control				
			Main Engine			Auxiliary	
Identification of system parameter	Alarm	Indication	Slow-down	Shut-down	Control	Stand by Start	Stop
Fuel oil pressure after filter (engine inlet)		local					
Fuel oil viscosity before injection pumps or fuel oil temperature before injection pumps (for engine running on heavy fuel)		local					
Leakage from high pressure pipes where required	H						
Lubricating oil to main bearing and thrust bearing pressure	L	local					
	LL			X			
Lubricating oil to cross-head bearing pressure when separate	L	local					
	LL			X			
Lubricating oil to camshaft pressure when separate	L	local					
	LL			X			
Turbocharger lubricating oil inlet pressure		local					
Lubricating oil inlet temperature		local					
Thrust bearing pads or bearing outlet temperature	H	local					
Main, crank, cross-head bearing, oil outlet temp	H						
Oil mist concentration in crankcase (or engine bearing temperature monitors or equivalent devices) **(5)**	H		X				
Cylinder fresh cooling water system inlet pressure	L	local**(3)**					
Cylinder fresh cooling water outlet temperature or, when common cooling space without individual stop valves, the common cylinder water outlet temperature		local					
Piston coolant inlet pressure on each cylinder **(1)**	L	local					
Piston coolant outlet temperature on each cylinder**(1)**		local					
Piston coolant outlet flow on each cylinder **(1) (2)**	L						
Speed of turbocharger		local					
Scavenging air receiver pressure		local					
Scavenging air box temperature (detection of fire in receiver)		local					
Exhaust gas temperature		local**(4)**					
Engine speed / direction of speed (when reversible)		local					
	H			X			
Fault in the electronic governor system	X						

(1) Not required, if the coolant is oil taken from the main cooling system of the engine.
(2) Where outlet flow cannot be monitored due to engine design, alternative arrangement may be accepted.
(3) For engines of 220 KW and above.
(4) Indication is required after each cylinder, for engines of 500 kW/cylinder and above.
(5) For engine of 2250 KW and above or having cylinders of more than 300 mm bore.

Table 5 : Monitoring of main propulsion trunk-piston (medium or high speed) diesel engines

Symbol convention H = High, HH = High high, G = group alarm L = Low, LL = Low low, I = individual alarm X = function is required, R = remote	Monitoring		Automatic control				
			Main Engine			Auxiliary	
Identification of system parameter	Alarm	Indication	Slow-down	Shut-down	Control	Stand by Start	Stop
Fuel oil pressure after filter (engine inlet)		local					
Fuel oil viscosity before injection pumps or fuel oil temperature before injection pumps (for engine running on heavy fuel)		local					
Leakage from high pressure pipes where required	H						
Lubricating oil to main bearing and thrust bearing pressure	L	local					
	LL			X			
Lubricating oil filter differential pressure	H	local					
Turbocharger lubricating oil inlet pressure **(1)**		local					
Lubricating oil inlet temperature		local					
Oil mist concentration in crankcase (or engine bearing temperature monitors or equivalent devices) **(3)**	H			X			
Cylinder fresh cooling water outlet temperature or, when common cooling space without individual stop valves, the common cylinder water outlet temperature		local					
Scavenging air receiver pressure		local					
Scavenging air box temperature (detection of fire in receiver)		local					
Exhaust gas temperature		local **(2)**					
Engine speed / direction of speed (when reversible)		local					
	H			X			
Fault in the electronic governor system	X						

(1) If without integrated self-contained oil lubrication system.
(2) Indication is required after each cylinder, for engines of 500 kW/cylinder and above.
(3) For engine of 2250 KW and above or having cylinders of more than 300 mm bore.

Table 6 : Monitoring of trunk-piston diesel engines used for auxiliary services

Symbol convention H = High, HH = High high, G = group alarm L = Low, LL = Low low, I = individual alarm X = function is required, R = remote	Monitoring		Automatic control				
			Engine			Auxiliary	
Identification of system parameter	Alarm	Indication	Slow-down	Shut-down	Control	Stand by Start	Stop
Fuel oil viscosity or temperature before injection (for engine running on heavy fuel)		local					
Fuel oil pressure		local					
Fuel oil leakage from pressure pipes	H						
Lubricating oil pressure	L	local		X			
Oil mist concentration in crankcase (or engine bearing temperature monitors or equivalent devices) **(1)**	H			X			
Pressure or flow of cooling water, if not connected to main system	L	local					
Temperature of cooling water or cooling air		local					
Engine speed		local					
	H			X			
Fault in the electronic governor system	X						

(1) For engine of 2250 KW and above or having cylinders of more than 300 mm bore.

Table 7 : Monitoring of emergency diesel engines

Symbol convention H = High, HH = High high, G = group alarm L = Low, LL = Low low, I = individual alarm X = function is required, R = remote	Monitoring		Automatic control				
			Engine			Auxiliary	
Identification of system parameter	Alarm	Indication	Slow-down	Shut-down	Control	Stand by Start	Stop
Fuel oil leakage from pressure pipes	H	local					
Lubricating oil temperature **(1)**	H	local					
Lubricating oil pressure	L	local					
Oil mist concentration in crankcase **(2)**	H	local					
Pressure or flow of cooling water **(1)**	L	local					
Temperature of cooling water or cooling air		local					
Engine speed		local					
	H			X **(1)**			

(1) Not applicable to emergency generator of less than 220 kW.
(2) For engines having a power of more than 2250kW or a cylinder bore of more than 300 mm.
Note 1: The safety and alarm systems are to be designed to 'fail safe'. The characteristics of the 'fail safe' operation are to be evaluated on the basis not only of the system and its associated machinery, but also the complete installation, as well as the unit.
Note 2: Regardless of the engine output, if shutdowns additional to those above specified except for the overspeed shutdown, they are to be automatically overridden when the engine is in automatic or remote control mode during navigation.
Note 3: The alarm system is to function in accordance with AUT notation, with additional requirements that grouped alarms are to be arranged on the bridge.
Note 4: In addition to the fuel oil control from outside the space, a local means of engine shutdown is to be provided.
Note 5: The local indications are to be provided within the same space as the diesel engines and are to remain operational in the event of failure of the alarm and safety systems.

3 Arrangement and installation

3.1 Starting arrangements

3.1.1 Mechanical air starting

a) Air starting the main and auxiliary engines is to be arranged in compliance with Ch 1, Sec 7, [17.3.1].

b) The total capacity of air compressors and air receivers is to be in compliance with Ch 1, Sec 7, [17.3.2] and Ch 1, Sec 7, [17.3.3].

c) The main starting air arrangements for main propulsion or auxiliary diesel engines are to be adequately protected against the effects of backfiring and internal explosion in the starting air pipes. To this end, the following safety devices are to be fitted:

- an isolating non-return valve, or equivalent, at the starting air supply connection to each engine.
- a bursting disc or flame arrester:
  - in way of the starting valve of each cylinder, for direct reversing engines having a main starting air manifold
  - at least at the supply inlet to the starting air manifold, for non-reversing engines.

  The bursting disc or flame arrester above may be omitted for engines having a bore not exceeding 230 mm.

Other protective devices will be specially considered by the Society.

The requirements of this item c) do not apply to engines started by pneumatic motors.

d) Compressed air receivers are to comply with the requirements of Ch 1, Sec 3. Compressed air piping and associated air compressors are to comply with the requirements of Ch 1, Sec 7.

3.1.2 Electrical starting

a) Where main internal combustion engines are arranged for electrical starting, at least two separate batteries are to be fitted.

The arrangement is to be such that the batteries cannot be connected in parallel.

Each battery is to be capable of starting the main engine when in cold and ready to start condition.

The combined capacity of batteries is to be sufficient to provide within 30 min., without recharging, the number of starts required in [3.1.1] b) in the event of air starting.

b) Electrical starting arrangements for auxiliary engines are to have two separate storage batteries or may be supplied by two separate circuits from main engine storage batteries when these are provided. In the case of a single auxiliary engine, one battery is acceptable. The combined capacity of the batteries is to be sufficient for at least three starts for each engine.

c) The starting batteries are only to be used for starting and for the engine's alarm and monitoring. Provision is to be made to maintain the stored energy at all times.

d) Each charging device is to have at least sufficient rating for recharging the required capacity of batteries within 6 hours.

3.1.3 Special requirements for starting arrangements for emergency generating sets

a) Emergency generating sets are to be capable of being readily started in their cold condition at a temperature of 0°C. If this is impracticable, or if lower temperatures are likely to be encountered, provision acceptable to the Society shall be made for the maintenance of heating arrangements, to ensure ready starting of the generating sets.

b) Each emergency generating set arranged to be automatically started shall be equipped with starting devices approved by the Society with a stored energy capability of at least three consecutive starts.

The source of stored energy shall be protected to preclude critical depletion by the automatic starting system, unless a second independent means of starting is provided. In addition, a second source of energy shall be provided for an additional three starts within 30 minutes, unless manual starting can be demonstrated to be effective.

c) The stored energy is to be maintained at all times, as follows:

- *electrical and hydraulic starting systems shall be maintained from the emergency switchboard*
- *compressed air starting systems shall be provided in accordance with Ch 1, Sec 7, [17.3.4].*

d) Where automatic starting is not required, manual starting, such as manual cranking, inertia starters, manually charged hydraulic accumulators, or powder charge cartridges, is permissible where this can be demonstrated as being effective.

e) When manual starting is not practicable, the requirements of b) and c) are to be complied with, except that starting may be manually initiated.

3.2 Turning gear

3.2.1 Each engine is to be provided with hand-operated turning gear; where deemed necessary, the turning gear is to be both hand and mechanically-operated.

The turning gear engagement is to inhibit starting operations.

3.3 Trays

3.3.1 Trays fitted with means of drainage are to be provided in way of the lower part of the crankcase and, in general, in way of the parts of the engine, where oil is likely to spill in order to collect the fuel oil or lubricating oil dripping from the engine.

3.4 Exhaust gas system

3.4.1 In addition to the requirements given in Ch 1, Sec 7, the exhaust system is to be efficiently cooled or insulated in such a way that the surface temperature does not exceed 220°C (see also Ch 1, Sec 1, [3.4]).

3.5 Air intakes

3.5.1 Air intakes for internal combustion engines are to be led from a safe area. In addition, these internal combustion engines, where used in association with equipment processing flammable substances, are to be fitted with an automatic device to prevent overspeeding in the event of accidental ingestion of flammable gases and/or vapours.

Note 1: The present requirement is not applicable to gas turbines

3.5.2 Exhaust pipes from internal combustion engines are to be let well clear of hazardous areas and, where such engines are used in association with equipment processing flammable substances, are to be fitted with efficient spark arresters.

4 Type tests, material tests, workshop inspection and testing, certification

4.1 Type testing

4.1.1 Objectives

The type testing is to be arranged to represent typical foreseen service load profiles, as specified by the engine builder, as well as to cover for required margins due to fatigue scatter and reasonably foreseen in-service deterioration. This applies to:

- Parts subjected to high cycle fatigue (HCF) such as connecting rods, cams, rollers and spring tuned dampers where higher stresses may be provided by means of elevated injection pressure, cylinder maximum pressure, etc.
- Parts subjected to low cycle fatigue (LCF) such as "hot" parts when load profiles such as idle - full load - idle (with steep ramps) are frequently used.
- Operation of the engine at limits as defined by its specified alarm system, such as running at maximum permissible power with the lowest permissible oil pressure and/or highest permissible oil inlet temperature.

4.1.2 Validity

a) Type testing is required for every new engine type intended for installation onboard units subject to classification.

b) A type test carried out for a particular type of engine at any place of manufacture will be accepted for all engines of the same type built by licensees or the licensor, subject to each place of manufacture being found to be acceptable to the Society.

c) A type of engine is defined by:

- bore and stroke
- injection method (direct or indirect)
- valve and injection operation (by cams or electronically controlled)
- kind of fuel (liquid, dual-fuel, gaseous)
- working cycle (4-stroke, 2-stroke)
- turbo-charging system (pulsating or constant pressure)
- the charging air cooling system (e.g. with or without intercooler)
- cylinder arrangement (in-line or V) (see Note 1)
- cylinder power, speed and cylinder pressures (see Note 2).

Note 1: One type test will be considered adequate to cover a range of different numbers of cylinders. However, a type test of an in-line engine may not always cover the V-version. Subject to the individual Societies' discretion, separate type tests may be required for the V-version. On the other hand, a type test of a V-engine covers the in-line engines, unless the bmep is higher.

Items such as axial crankshaft vibration, torsional vibration in camshaft drives, and crankshafts, etc. may vary considerably with the number of cylinders and may influence the choice of engine to be selected for type testing.

Note 2: The engine is type approved up to the tested ratings and pressures (100% corresponding to MCR).

Provided documentary evidence of successful service experience with the classified rating of 100% is submitted, an increase (if design approved, only crankshaft calculation and crankshaft drawings, if modified) may be permitted without a new type test if the increase from the type tested engine is within:

- 5% of the maximum combustion pressure, or
- 5% of the mean effective pressure, or
- 5% of the rpm

Providing maximum power is not increased by more than 10%, an increase of maximum approved power may be permitted without a new type test provided engineering analysis and evidence of successful service experience in similar field applications (even if the application is not classified) or documentation of internal testing are submitted if the increase from the type tested engine is within:

- 10% of the maximum combustion pressure, or
- 10% of the mean effective pressure, or
- 10% of the rpm.

d) De-rated engine

If an engine has been design approved, and internal testing per Stage A (see [4.1.4]) is documented to a rating higher than the one type tested, the Type Approval may be extended to the increased power/mep/rpm upon submission of an Extended Delivery Test Report at:

- test at over speed (only if nominal speed has increased)
- rated power, i.e. 100% output at 100% torque and 100% speed corresponding to load point 1 (see Fig 2), 2 measurements with one running hour in between
- maximum permissible torque (normally 110%) at 100% speed corresponding to load point 3 (see Fig 2) or maximum permissible power (normally 110%) and speed according to nominal propeller curve corresponding to load point 3a (see Fig 2), 0,5 hour
- 100% power at maximum permissible speed corresponding to load point 2 (see Fig 2), 0,5 hour.

e) An integration test demonstrating that the response of the complete mechanical, hydraulic and electronic system is as predicted maybe carried out for acceptance of sub-systems (Turbo Charger, Engine Control System, Dual Fuel, Exhaust Gas treatment…) separately approved. The scope of these tests shall be proposed by the designer/licensor taking into account of impact on engine.

Figure 2 : Load points

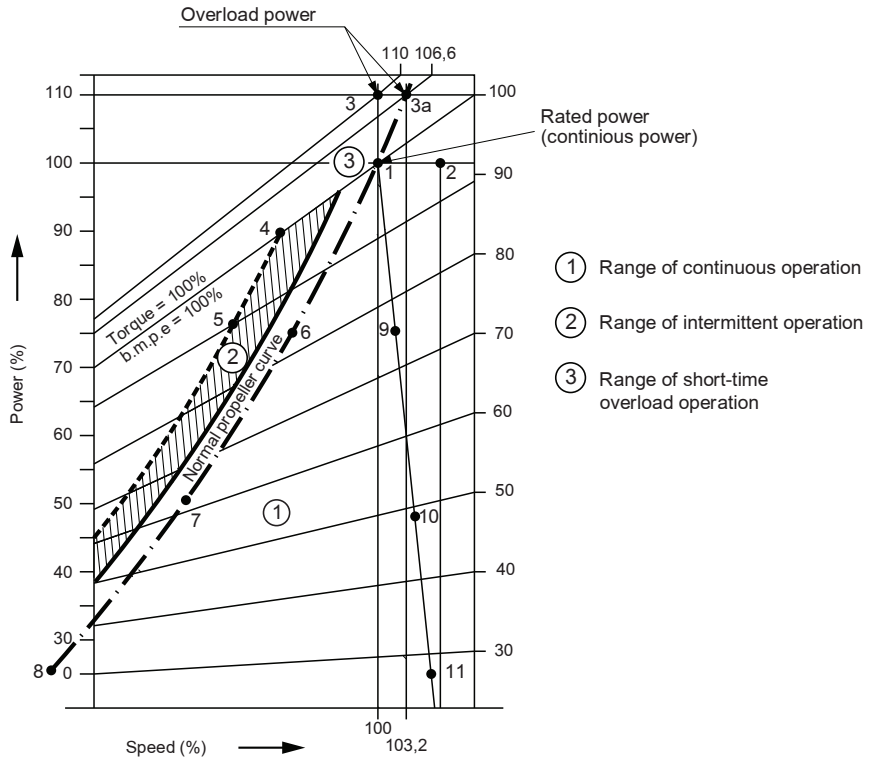

4.1.3 Safety precautions

a) Before any test run is carried out, all relevant equipment for the safety of attending personnel is to be made available by the manufacturer/shipyard and is to be operational, and its correct functioning is to be verified.

b) This applies especially to crankcase explosive conditions protection, but also over-speed protection and any other shut down function.

c) The inspection for jacketing of high-pressure fuel oil lines and proper screening of pipe connections (as required in [4.1.7], item i) is also to be carried out before the test runs.

d) Interlock test of turning gear is to be performed when installed.

4.1.4 Test programme

a) The type testing is divided into 3 stages:

- Stage A - internal tests.

  This includes some of the testing made during the engine development, function testing, and collection of measured parameters and records of testing hours. The results of testing required by the Society or stipulated by the designer are to be presented to the Society before starting stage B.

- Stage B - witnessed tests.

  This is the testing made in the presence of the Surveyor.

- Stage C - component inspection.

  This is the inspection of engine parts to the extent as required by the Society.

b) The complete type testing program is subject to approval by the Society. The extent the Surveyor's attendance is to be agreed in each case, but at least during stage B and C.

c) Testing prior to the witnessed type testing (stage B and C), is also considered as a part of the complete type testing program.

d) Upon completion of complete type testing (stage A through C), a type test report is to be submitted to the Society for review. The type test report is to contain:

- overall description of tests performed during stage A. Records are to be kept by the builders QA management for presentation to the Society
- detailed description of the load and functional tests conducted during stage B
- inspection results from stage C.

e) High speed engines for marine use are normally to be subjected to an endurance test of 100 hours at full load. Omission or simplification of the type test may be considered for the type approval of engines with long service experience from non-marine fields or for the extension of type approval of engines of a well-known type, in excess of the limits given in [4.1.2].

Propulsion engines for high speed vessels that may be used for frequent load changes from idle to full are normally to be tested with at least 500 cycles (idle - full load - idle) using the steepest load ramp that the control system (or operation manual if not automatically controlled) permits. The duration at each end is to be sufficient for reaching stable temperatures of the hot parts.

4.1.5 Measurements and recordings

a) During all testing the ambient conditions (air temperature, air pressure and humidity) are to be recorded.

b) As a minimum, the following engine data are to be measured and recorded:

- engine r.p.m.
- torque
- maximum combustion pressure for each cylinder (see Note 1)
- mean indicated pressure for each cylinder (see Note 1)
- charging air pressure and temperature
- exhaust gas temperature
- fuel rack position or similar parameter related to engine load
- turbocharger speed
- all engine parameters that are required for control and monitoring for the intended use (propulsion, auxiliary, emergency).

Note 1: For engines where the standard production cylinder heads are not designed for such measurements, a special cylinder head made for this purpose may be used. In such a case, the measurements may be carried out as part of Stage A and are to be properly documented. Where deemed necessary e.g. for dual fuel engines, the measurement of maximum combustion pressure and mean indicated pressure may be carried out by indirect means, provided the reliability of the method is documented.

Calibration records for the instrumentation used to collect data as listed above are to be presented to - and reviewed by the attending Surveyor.

Additional measurements may be required in connection with the design assessment.

4.1.6 Stage A - internal tests

a) During the internal tests, the engine is to be operated at the load points important for the engine designer and the pertaining operating values are to be recorded. The load conditions to be tested are also to include the testing specified in the applicable type approval programme.

b) At least the following conditions are to be tested:

- Normal case:

  The load points 25%, 50%, 75%, 100% and 110% of the maximum rated power for continuous operation, to be made along the normal (theoretical) propeller curve and at constant speed for propulsion engines (if applicable mode of operation i.e. driving controllable pitch propellers), and at constant speed for engines intended for generator sets including a test at no load and rated speed.
- The limit points of the permissible operating range. These limit points are to be defined by the engine manufacturer.
- For high speed engines, the 100 hr full load test and the low cycle fatigue test apply as required in connection with the design assessment.
- Specific tests of parts of the engine, required by the Society or stipulated by the designer.

4.1.7 Stage B - witnessed tests

a) The tests listed below are to be carried out in the presence of a Surveyor. The achieved results are to be recorded and signed by the attending Surveyor after the type test is completed.

b) The over-speed test is to be carried out and is to demonstrate that the engine is not damaged by an actual engine overspeed within the overspeed shutdown system set-point. This test may be carried out at the manufacturer's choice either with or without load during the speed overshoot.

c) The engine is to be operated according to the power and speed diagram (see Fig 2). The data to be measured and recorded when testing the engine at the various load points have to include all engine parameters listed in [4.1.5]. The operating time per load point depends on the engine size (achievement of steady state condition) and on the time for collection of the operating values. Normally, an operating time of 0,5 hour can be assumed per load point, however sufficient time should be allowed for visual inspection by the Surveyor.

d) The load points (see Fig 2) are:
- Rated power (MCR), i.e. 100% output at 100% torque and 100% speed corresponding to load point 1, normally for 2 hours with data collection with an interval of 1 hour. If operation of the engine at limits as defined by its specified alarm system (e.g. at alarm levels of lub oil pressure and inlet temperature) is required, the test should be made here.
- 100% power at maximum permissible speed corresponding to load point 2.
- Minimum permissible speed at 100% torque, corresponding to load point 4.
- Minimum permissible speed at 90% torque corresponding to load point 5 (Applicable to propulsion engines only).
- Part loads e.g. 75%, 50% and 25% of rated power and speed according to nominal propeller curve (i.e. 90.8%, 79.3% and 62.9% speed) corresponding to points 6, 7 and 8 or at constant rated speed setting corresponding to points 9, 10 and 11, depending on the intended application of the engine.
- Crosshead engines not restricted for use with C.P. propellers are to be tested with no load at the associated maximum permissible engine speed.

e) During all these load points, engine parameters are to be within the specified and approved values.

f) Operation with damaged turbocharger:

For 2-stroke propulsion engines, the achievable continuous output is to be determined in the case of turbocharger damage.

Engines intended for single propulsion with a fixed pitch propeller are to be able to run continuously at a speed (r.p.m.) of 40% of full speed along the theoretical propeller curve when one turbocharger is out of operation. (The test can be performed by either by-passing the turbocharger, fixing the turbocharger rotor shaft or removing the rotor).

g) Functional tests:
- Verification of the lowest specified propulsion engine speed according to the nominal propeller curve as specified by the engine designer (even though it works on a water- brake). During this operation, no alarm shall occur.
- Starting tests, for non-reversible engines and/or starting and reversing tests, for reversible engines, for the purpose of determining the minimum air pressure and the consumption for a start.
- Governor tests: tests for compliance with [2.7] are to be carried out.

h) Integration test:

For electronically controlled diesel engines, integration tests are to verify that the response of the complete mechanical, hydraulic and electronic system is as predicted for all intended operational modes. The scope of these tests is to be agreed with the Society for selected cases based on the FMEA required in Tab 2, item 18.

i) Fire protection measures:

Screening of pipe connections in piping containing flammable liquids and insulation of hot surfaces:
- The engine is to be inspected for jacketing of high-pressure fuel oil lines, including the system for the detection of leakage, and proper screening of pipe connections in piping containing flammable liquids.
- Proper insulation of hot surfaces is to be verified while running the engine at 100% load, alternatively at the overload approved for intermittent use. Readings of surface temperatures are to be done by use of Infrared Thermoscanning Equipment. Equivalent measurement equipment may be used when so approved by the Society. Readings obtained are to be randomly verified by use of contact thermometers.

4.1.8 Stage C - Opening up for Inspections

a) The crankshaft deflections are to be measured in the specified (by designer) condition (except for engines where no specification exists).

b) High speed engines for marine use are normally to be stripped down for a complete inspection after the type test.

c) For all the other engines, after the test run the components of one cylinder for in-line engines and two cylinders for V-engines are to be presented for inspection as follows (engines with long service experience from non-marine fields can have a reduced extent of opening):
- piston removed and dismantled
- crosshead bearing dismantled
- guide planes
- connecting rod bearings (big and small end) dismantled (special attention to serrations and fretting on contact surfaces with the bearing backsides)
- main bearing dismantled
- cylinder liner in the installed condition
- cylinder head, valves disassembled
- cam drive gear or chain, camshaft and crankcase with opened covers. (The engine must be turnable by turning gear for this inspection.)

d) For V-engines, the cylinder units are to be selected from both cylinder banks and different crank throws.

e) If deemed necessary by the surveyor, further dismantling of the engine may be required.

4.1.9 If an electronically controlled diesel engine has been type tested as a conventional engine the Society may waive tests required by this article provided the results of the individual tests would be similar.

4.1.10 If an electronically controlled diesel engine has been type tested as a conventional engine the Society may waive tests required by this article provided the results of the individual tests would be similar.

4.2 Material and non-destructive tests

4.2.1 List of components

Engine components are to be tested in accordance with Tab 8 and with the requirements of NR216.

Symbols used on Tab 8 are defined as below:

C : Chemical composition
CD : Crack detection by MPI (magnetic particul inspection) or DP (dye penetration inspection)
CH : Crosshead engines
D : Cylinder bore diameter (mm)
GJL : Gray cast iron
GJS : Spheroidal graphite cast iron
GS : Cast steel
M : Mechanical properties
SC : Society certificate
TR : Test report
UT : Ultrasonic testing
W : Work certificate
X : Visual examination of accessible surfaces by the Surveyor.

For components and materials not listed in Tab 8, consideration shall be given by the Society upon full details being submitted and reviewed.

Table 8 : Summary of required documentation for engine components

Part **(1) (2) (3) (4)**	Material properties **(5)**	Non-destructive examination **(6)**	Hydraulic testing **(7)**	Dimensional inspection, including surface condition	Visual inspection (Surveyor)	Applicable to engines:	Component certificate
Welded bedplate	W(C+M)	W(UT+CD)			fit-up + post-welding	All	
Bearing transverse girders GS	W(C+M)	W(UT+CD)			X	All	SC
Welded frame box	W(C+M)	W(UT+CD)			fit-up + post-welding	All	SC
Cylinder block GJL			W **(8)**			CH	
Cylinder block GJS			W **(8)**			CH	
Welded cylinder frames	W(C+M)	W(UT+CD)			fit-up + post-welding	CH	SC
Engine block GJL			W **(8)**			> 400 kW/cyl	
Engine block GJS	W(M)		W **(8)**			> 400 kW/cyl	
Cylinder liner	W(C+M)		W **(8)**			D > 300 mm	
Cylinder head GJL			W			D > 300 mm	
Cylinder head GJS			W			D > 300 mm	
Cylinder head GS	W(C+M)	W(UT+CD)	W		X	D > 300 mm	SC
Forged cylinder head	W(C+M)	W(UT+CD)	W		X	D > 300 mm	SC
Piston crown GS	W(C+M)	W(UT+CD)			X	D > 400 mm	SC
Forged piston crown	W(C+M)	W(UT+CD)			X	D > 400 mm	SC
Crankshaft: made in one piece	SC(C+M)	W(UT+CD)		W	Random, of fillets and oil bores	All	SC

Part **(1) (2) (3) (4)**	Material properties **(5)**	Non-destructive examination **(6)**	Hydraulic testing **(7)**	Dimensional inspection, including surface condition	Visual inspection (Surveyor)	Applicable to engines:	Component certificate
Semi-built crankshaft	See below	See below		See below	See below	All	SC
Crank throw	SC(C+M)	W(UT+CD)		W	Random, of fillets and shrink fittings	All	
Forged main journal and journals with flange	SC(C+M)	W(UT+CD)		W	Random, of shrink fittings	All	
Exhaust gas valve cage			W			CH	
Piston rod, if applicable	SC(C+M)	W(UT+CD) CD again after final machining (grinding)			Random	D > 400 mm	SC
Cross head	SC(C+M)	W(UT+CD) CD again after final machining (grinding)			Random	CH	SC
Connecting rod with cap	SC(C+M)	W(UT+CD)		W	Random, of all surfaces, in particular those shot peened	All	SC
Coupling bolts for crankshaft	SC(C+M)	W(UT+CD)		W	Random, of interference fit	All	SC
Bolts and studs for main bearings	W(C+M)	W(UT+CD)				D > 300 mm	
Bolts and studs for cylinder heads	W(C+M)	W(UT+CD)				D > 300 mm	
Bolts and studs for connecting rods	W(C+M)	W(UT+CD)		TR of thread making		D > 300 mm	
Tie rod	W(C+M)	W(UT+CD)		TR of thread making	Random	CH	SC
High pressure fuel injection pump body			W			D > 300 mm	
			TR			D ≤ 300 mm	
High pressure fuel injection valves (only for those not autofretted)			W			D > 300 mm	
			TR			D ≤ 300 mm	
High pressure fuel injection pipes including common fuel rail	W(C+M)		W for those that are not autofretted			D > 300 mm	
			TR for those that are not autofretted			D ≤ 300 mm	
High pressure common servo oil system	W(C+M)		W			D > 300 mm	
			TR			D ≤ 300 mm	
Cooler, both sides **(9)**	W(C+M)		W			D > 300 mm	

Part (1) (2) (3) (4)	Material properties (5)	Non-destructive examination (6)	Hydraulic testing (7)	Dimensional inspection, including surface condition	Visual inspection (Surveyor)	Applicable to engines:	Component certificate
Accumulator of common rail fuel or servo oil system	W(C+M)		W			All engines with accumulators with a capacity of > 0,5 l	
Piping, pumps, actuators, etc. for hydraulic drive of valves, if applicable	W(C+M)		W			> 800 kW/cyl	
Engine driven pumps (oil, water, fuel, bilge)			W			> 800 kW/cyl	
Bearings for main, crosshead, and crankpin	TR(C)	TR (UT for full contact between basic material and bearing metal)		W		> 800 kW/cyl	

Note 1: Symbols used in this Table are listed in [4.2.1].

(1) For turbochargers, see Ship Rules, Pt C, Ch 1, Sec 14.

(2) Crankcase safety valves are to be type tested in accordance with Ch 1, App 2 and documented according to [2.3.4].

(3) Oil mist detection systems are to be type tested in accordance with Ship Rules, Pt C, Ch 3, App 1 and documented according to [2.3.5].

(4) For Speed governor and overspeed protective devices, see [2.7].

(5) Material properties include chemical composition and mechanical properties, and also surface treatment such as surface hardening (hardness, depth and extent), peening and rolling (extent and applied force).

(6) Non-destructive examination means e.g. ultrasonic testing, crack detection by MPI or DP.

(7) Hydraulic testing is applied on the water/oil side of the component. Items are to be tested by hydraulic pressure at the pressure equal to 1,5 times the maximum working pressure. High pressure parts of the fuel injection system are to be tested by hydraulic pressure at the pressure equal to 1,5 maximum working pressure or maximum working pressure plus 300 bar, whichever is the less. Where design or testing features may require modification of these test requirements, special consideration may be given.

(8) Hydraulic testing is also required for those parts filled with cooling water and having the function of containing the water which is in contact with the cylinder or cylinder liner.

(9) Charge air coolers need only be tested on the water side.

4.3 Factory acceptance test

4.3.1 Safety precautions

a) Before any test run is carried out, all relevant equipment for the safety of attending personnel is to be made available by the manufacturer / shipyard and is to be operational.

b) his applies especially to crankcase explosive conditions protection, but also to over-speed protection and any other shut down function.

c) The overspeed protective device is to be set to a value, which is not higher than the overspeed value that was demonstrated during the type test for that engine. This set point shall be verified by the surveyor.

4.3.2 General

a) Before any official testing, the engines shall be run-in as prescribed by the engine manufacturer.

b) Adequate test bed facilities for loads as required in [4.3.3] shall be provided. All fluids used for testing purposes such as fuel, lubrication oil and cooling water are to be suitable for the purpose intended, e.g. they are to be clean, preheated if necessary and cause no harm to engine parts. This applies to all fluids used temporarily or repeatedly for testing purposes only.

c) Engines are to be inspected for:

- Jacketing of high-pressure fuel oil lines including the system used for the detection of leakage.
- Screening of pipe connections in piping containing flammable liquids.
- Insulation of hot surfaces by taking random temperature readings that are to be compared with corresponding readings obtained during the type test. This shall be done while running at the rated power of engine. Use of contact thermometers may be accepted at the discretion of the attending Surveyor. If the insulation is modified subsequently to the Type Approval Test, the Society may request temperature measurements as required by [4.1.7], item g).

d) These inspections are normally to be made during the works trials by the manufacturer and the attending surveyor, but at the discretion of the Society parts of these inspections may be postponed to the shipboard testing.

4.3.3 Works trials (Factory Acceptance Test)

a) Objectives

The purpose of the works trials is to verify design premises such as power, safety against fire, adherence to approved limits (e.g. maximum pressure), and functionality and to establish reference values or base lines for later reference in the operational phase.

b) Records

1) The following environmental test conditions are to be recorded:
   - ambient air temperature
   - ambient air pressure
   - atmospheric humidity.

2) For each required load point, the following parameters are normally to be recorded:
   - power and speed
   - fuel index (or equivalent reading)
   - maximum combustion pressures (only when the cylinder heads installed are designed for such measurement)
   - exhaust gas temperature before turbine and from each cylinder (to the extent that monitoring is required in Ch 1, Sec 14 of the Ship Rules and [2.7])
   - charge air temperature
   - charge air pressure
   - turbocharger speed (to the extent that monitoring is required in Ch 1, Sec 14 of the Ship Rules).

3) Calibration records for the instrumentation are, upon request, to be presented to the attending Surveyor.

4) For all stages at which the engine is to be tested, the pertaining operational values are to be measured and recorded by the engine manufacturer. All results are to be compiled in an acceptance protocol to be issued by the engine manufacturer. This also includes crankshaft deflections if considered necessary by the engine designer.

5) In each case, all measurements conducted at the various load points are to be carried out at steady state operating conditions. However, for all load points provision should be made for time needed by the Surveyor to carry out visual inspections. The readings for MCR, i.e. 100% power (rated maximum continuous power at corresponding rpm) are to be taken at least twice at an interval of normally 30 minutes.

c) Test loads

1) Test loads for various engine applications are given below. In addition, the scope of the trials may be expanded depending on the engine application, service experience, or other relevant reasons.

Note 1: Alternatives to the detailed tests may be agreed between the manufacturer and the Society when the overall scope of tests is found to be equivalent.

2) Propulsion engines driving propeller or impeller only:
   - 100% power (MCR) at corresponding speed n_0: at least 60 min.
   - 110% power at engine speed $1{,}032n_0$: Records to be taken after 15 minutes or after steady conditions have been reached, whichever is shorter.

Note 2: 110% test load is only required once for each different engine/turbocharger configuration.

   - Approved intermittent overload (if applicable): testing for duration as agreed with the manufacturer.
   - 90% (or normal continuous cruise power), 75%, 50% and 25% power in accordance with the nominal propeller curve, the sequence to be selected by the engine manufacturer.
   - Reversing manoeuvres (if applicable).

Note 3: After running on the test bed, the fuel delivery system is to be so adjusted that overload power cannot be given in service, unless intermittent overload power is approved by the Society. In that case, the fuel delivery system is to be blocked to that power.

3) Engines driving generators for electric propulsion:
   - 100% power (MCR) at corresponding speed n_0: at least 60 min.
   - 110% power at engine speed n_0: 15 min. - after having reached steady conditions.
   - Governor tests for compliance with [2.7] are to be carried out.
   - 75%, 50% and 25% power and idle, the sequence to be selected by the engine manufacturer.

Note 4: After running on the test bed, the fuel delivery system is to be adjusted so that full power plus a 10% margin for transient regulation can be given in service after installation onboard.

The transient overload capability is required so that the required transient governing characteristics are achieved also at 100% loading of the engine, and also so that the protection system utilised in the electric distribution system can be activated before the engine stalls.

4) Engines driving generators for auxiliary purposes:

Tests to be performed as in [4.3.3].

5) Propulsion engines also driving power take off (PTO) generator:
   - 100% power (MCR) at corresponding speed n_0: at least 60 min.
   - 110% power at engine speed n_0: 15 min. - after having reached steady conditions.
   - Approved intermittent overload (if applicable): testing for duration as agreed with the manufacturer.
   - 90% (or normal continuous cruise power), 75%, 50% and 25% power in accordance with the nominal propeller curve or at constant speed n_0, the sequence to be selected by the engine manufacturer.

Note 5: After running on the test bed, the fuel delivery system is to be adjusted so that full power plus a margin for transient regulation can be given in service after installation onboard. The transient overload capability is required so that the electrical protection of downstream system components is activated before the engine stalls. This margin may be 10% of the engine power but at least 10% of the PTO power.

6) Engines driving auxiliaries:
   - 100% power (MCR) at corresponding speed n_0: at least 30 min.
   - 110% power at engine speed n_0: 15 min. - after having reached steady conditions.
   - Approved intermittent overload (if applicable): testing for duration as agreed with the manufacturer.
   - For variable speed engines, 75%, 50% and 25% power in accordance with the nominal power consumption curve, the sequence to be selected by the engine manufacturer.

Note 6: After running on the test bed, the fuel delivery system is normally to be so adjusted that overload power cannot be delivered in service, unless intermittent overload power is approved. In that case, the fuel delivery system is to be blocked to that power.

d) Turbocharger matching with engine

1) Compressor chart

Turbochargers shall have a compressor characteristic that allows the engine, for which it is intended, to operate without surging during all operating conditions and also after extended periods in operation.

For abnormal, but permissible, operation conditions, such as misfiring and sudden load reduction, no continuous surging shall occur.

In this item, surging and continuous surging are defined as follows:
- surging means the phenomenon, which results in a high pitch vibration of an audible level or explosion-like noise from the scavenger area of the engine
- continuous surging means that surging happens repeatedly and not only once.

2) Surge margin verification

Category C turbochargers used on propulsion engines are to be checked for surge margins during the engine workshop testing as specified below. These tests may be waived if successfully tested earlier on an identical configuration of engine and turbocharger (including same nozzle rings).
- For 4-stroke engines:

  The following shall be performed without indication of surging:
  - with maximum continuous power and speed (=100%), the speed shall be reduced with constant torque (fuel index) down to 90% power
  - with 50% power at 80% speed (= propeller characteristic for fixed pitch), the speed shall be reduced to 72% while keeping constant torque (fuel index).
- For 2-stroke engines:

  The surge margin shall be demonstrated by at least one of the following methods:
  - The engine working characteristic established at workshop testing of the engine shall be plotted into the compressor chart of the turbocharger (established in a test rig). There shall be at least 10% surge margin in the full load range, i.e. working flow shall be 10% above the theoretical (mass) flow at surge limit (at no pressure fluctuations), or,
  - Sudden fuel cut-off to at least one cylinder shall not result in continuous surging and the turbocharger shall be stabilised at the new load within 20 seconds. For applications with more than one turbocharger the fuel shall be cut-off to the cylinders closest upstream to each turbocharger.

    This test shall be performed at two different engine loads:
    - the maximum power permitted for one cylinder misfiring
    - the engine load corresponding to a charge air pressure of about 0,6 bar (but without auxiliary blowers running).
  - No continuous surging and the turbocharger shall be stabilised at the new load within 20 seconds when the power is abruptly reduced from 100% to 50% of the maximum continuous power.

e) Integration tests

For electronically controlled engines, integration tests are to be made to verify that the response of the complete mechanical, hydraulic and electronic system is as predicted for all intended operational modes and the tests considered as a system are to be carried out at the works. If such tests are technically unfeasible at the works, however, these tests may be conducted during sea trial. The scope of these tests is to be agreed with the Society for selected cases based on the FMEA required in Tab 1.

f) Component inspections

Random checks of components to be presented for inspection after works trials are left to the discretion of each Society.

4.4 Certification

4.4.1 Type approval certificate

a) For each type of engine that is required to be approved, a type approval certificate is to be obtained by the engine designer. The process details for obtaining a type approval certificate are given below (see also [1.2]). This process consists of the engine designer obtaining from the Society:
   - drawing and specification approval
   - conformity of production
   - approval of type testing programme
   - type testing of engines
   - review of the obtained type testing results
   - evaluation of the manufacturing arrangements
   - issue of a type approval certificate.

   The manufacturing facility of the engine presented for the type approval test is to be assessed in accordance with NR320 Certification Scheme for the Classification of Marine Units.

b) Type approval certificate renewal

   A renewal of type approval certificates will be granted upon:
   - the submission of modified documents or new documents with substantial modifications replacing former documents compared to the previous submission(s), or alternatively,
   - a declaration that no substantial modifications have been applied since the last issuance of the type approval certificate.

c) Validity of type approval certificate

   The limit of the duration facility of the type approval certificate shall comply with requirements of NR320. The maximum period of validity of a type approval certificate is 5 years.

   The type approval certificate will be invalid if there are substantial modifications in the design, in the manufacturing or control processes or in the characteristics of the materials unless approved in advance by the Society.

4.4.2 Engine certificate

a) Each diesel engine manufactured for a shipboard application is to have an engine certificate. This process consists of the engine builder/licensee obtaining design approval of the engine application specific documents, submitting a comparison list of the production drawings to the previously approved engine design drawings referenced in [4.4.1] forwarding the relevant production drawings and comparison list for the use of the Surveyors at the manufacturing plant and shipyard if necessary, engine testing and upon satisfactorily meeting the Rule requirements, the issuance of an engine certificate.

   For those cases when a licensor – licensee agreement does NOT apply, an “engine designer” shall be understood as the entity that has the design rights for the engine type or is delegated by the entity having the design rights to modify the design.

b) Society’s requirements for production facilities comprising manufacturing facilities and processes, machining tools, quality assurance, testing facilities, etc. shall be assessed according to NR320 requirements.

4.4.3 Certification of engine components

a) The engine manufacturer is to have a quality control system that is suitable for the actual engine types to be certified by the Society. The quality control system is also to apply to any sub-suppliers. The Society reserves the right to review the system or parts thereof. Materials and components are to be produced in compliance with all the applicable production and quality instructions specified by the engine manufacturer. The Society requires that certain parts are verified and documented by means of Society Certificate (SC), Work Certificate (W) or Test Report (TR).

b) Society Certificate (SC)

   This is a document issued by the Society stating:
   - conformity with Rule requirements
   - that the tests and inspections have been carried out on the certified product itself, or on samples taken from the certified product itself
   - that the inspection and tests were performed in the presence of the Surveyor or in accordance with an Alternative Survey Scheme according to NR320.

c) Work’s Certificate (W)

   This is a document signed by the manufacturer stating:
   - conformity with requirements
   - that the tests and inspections have been carried out on the certified product itself, or on samples taken from the raw material, used for the product to be certified
   - that the tests were witnessed and signed by a qualified representative of the applicable department of the manufacturer.

A Work's Certificate may be considered equivalent to a Society Certificate and endorsed by the Society under the following cases:

- the test was witnessed by the Society Surveyor; or
- an Alternative Survey Scheme according to NR320 is in place between the Society and the manufacturer or material supplier; or
- the Work's certificate is supported by tests carried out by an accredited third party that is accepted by the Society and independent from the manufacturer and/or material supplier.

d) Test Report (TR)

This is a document signed by the manufacturer stating:

- conformity with requirements
- that the tests and inspections have been carried out on samples from the current production.

e) The documents above are used for product documentation as well as for documentation of single inspections such as crack detection, dimensional check, etc. If agreed to by the Society, the documentation of single tests and inspections may also be arranged by filling in results on a control sheet following the component through the production.

f) The Surveyor is to review the TR and W for compliance with the agreed or approved specifications. SC means that the Surveyor also witnesses the testing, batch or individual, unless an Alternative Survey Scheme, according to NR320, provides other arrangements.

g) The manufacturer is not exempted from responsibility for any relevant tests and inspections of those parts for which documentation is not explicitly requested by the Society.

Manufacturing works is to be equipped in such a way that all materials and components can be consistently produced to the required standard. This includes production and assembly lines, machining units, special tools and devices, assembly and testing rigs as well as all lifting and transportation devices.

5 Additional requirements for diesel engines in hazardous areas

5.1

5.1.1 General

Diesel engines may be fitted in zone 2 hazardous areas according to Ch 4, Sec 3, [6] provided they are designed, manufactured, tested and maintained according to a recognised standard, such as EN 1834-1 "Safety Requirements for Design and Construction of Engines for Use in Potentially Explosive Atmospheres", as amended.

5.1.2 Particular requirements

As a minimum, the following requirements are to be complied with:

- Exhaust manifold is to be water cooled.
- Maximum exposed surface and exhaust temperatures at full rated power of the engine are generally not to exceed 200°C (this may be lowered according to the gas processed).
- Efficient flame arrester is to be provided in air intake.
- Efficient flame trap and spark arresters are to be provided in exhaust system.
- Aluminium fittings are not acceptable unless suitably coated as a protection against igniting sparking.
- Pneumatic/hydraulic or hand starting arrangements are to be provided. Electrical starting arrangements will be subject to particular examination by the Society.
- Minimum flame path is not to be less than 13 mm.
- Provision is to be made to prevent overspeeding in the event of accidental ingestion of low flash vapours/gas.
- Air intake and exhaust are to be led from and to safe areas.
- All belts are to be of anti-static type.
- Cylinders and crankcases are to be provided with safety devices. Relief valves or breathers on engines are to be fitted with flame traps or alternatively discharge into the induction system downstream of the flame arrester and upstream of the shut off valve if fitted.
- Dipstick and/or filler caps are to be screwed or effectively secured by other means.

Section 3 Pressure Equipment

1 General

1.1 Principles

1.1.1 Scope of the Rules

The boilers and other pressure vessels, associated piping systems and fittings are to be of a design and construction adequate for the service for which they are intended and is to be so installed and protected as to reduce to a minimum any danger to persons on board, due regard being paid to moving parts, hot surfaces and other hazards. The design is to have regard to materials used in construction, the purpose for which the equipment is intended, the working conditions to which it will be subjected and the environmental conditions on board.

So these Rules apply to "pressure equipment" for the following requirements:

- be safe in sight of pressure risk
- be safe in sight of other risks, moving parts, hot surfaces
- ensure capability of propulsion and other essential services.

"Pressure equipment" means pressure vessels, piping (Ch 1, Sec 7), safety accessories and pressure accessories.

1.1.2 Overpressure risk

Where main or auxiliary boilers and other pressure vessels or any parts thereof may be subject to dangerous overpressure, means are to be provided where practicable to protect against such excessive pressure.

1.1.3 Propulsion capability

Means are to be provided whereby normal operation of main boilers can be sustained or restored even through one of the essential auxiliaries become inoperative. Special consideration is to be given to the malfunctioning of:

- the source of steam supply
- the boiler feed water systems
- the fuel oil supply system for boilers
- the mechanical air supply for boilers.

However the Society, having regard to overall safety considerations, may accept a partial reduction in propulsion capability from normal operation.

1.1.4 Tests

All boilers and other pressure vessels including their associated fittings which are under internal pressure are to be subjected to appropriate tests including a pressure test before being put into service for the first time (see also [7]).

1.2 Application

1.2.1 Pressure vessels covered by the Rules

The requirements of this Section apply to:

- all fired or unfired pressures vessels of metallic construction, including the associated fittings and mountings with maximum allowable pressure greater than 0,5 bar above atmospheric pressure with the exception of those indicated in [1.2.2]
- all boilers and other steam generators, including the associated fittings and mountings with maximum allowable pressure greater than 0,5 bar above atmospheric pressure with the exception of those indicated in [1.2.2].

1.2.2 Pressure vessels not covered by the Rules

Among others the following boilers and pressure vessels are not covered by the Rules and are to be considered on a case by case basis:

a) boilers with design pressure p > 10 MPa

b) pressure vessel intended for radioactive material

c) equipment comprising casings or machinery where the dimensioning, choice of material and manufacturing rules are based primarily on requirements for sufficient strength, rigidity and stability to meet the static and dynamic operational effects or other operational characteristics and for which pressure is not a significant design factor. Such equipment may include:
   - engines including turbines and internal combustion engines
   - steam engines, gas/steam turbines, turbo-generators, compressors, pumps and actuating devices

d) small pressure vessels included in self-contained domestic equipment.

1.3 Definitions

1.3.1 Pressure vessel

"Pressure vessel" means a housing designed and built to contain fluids under pressure including its direct attachments up to the coupling point connecting it to other equipment. A vessel may be composed of more than one chamber.

1.3.2 Fired pressure vessel

Fired pressure vessel is a pressure vessel which is completely or partially exposed to fire from burners or combustion gases or otherwise heated pressure vessel with a risk of overheating.

a) Boiler

Boiler is one or more fired pressure vessels and associated piping systems used for generating steam or hot water at a temperature above 120°C.

Any equipment directly connected to the boiler, such as economisers, superheaters and safety valves, is considered as part of the boiler, if it is not separated from the steam generator by means of any isolating valve. Piping connected to the boiler is considered as part of the boiler upstream of the isolating valve and as part of the associated piping system downstream of the isolating valve.

b) Thermal oil heater

Thermal oil heater is one or more fired pressure vessels and associated piping systems in which organic liquids (thermal oils) are heated. When heated by electricity thermal oil heater is considered as an unfired pressure vessel.

1.3.3 Unfired pressure vessel

Any pressure vessel which is not a fired pressure vessel is an unfired pressure vessel.

a) Heat exchanger

A heat exchanger is an unfired pressure vessel used to heat or cool a fluid with an another fluid. In general heat exchangers are composed of a number of adjacent chambers, the two fluids flowing separately in adjacent chambers. One or more chambers may consist of bundles of tubes.

b) Steam generator

A steam generator is a heat exchanger and associated piping used for generating steam. In general in these Rules, the requirements for boilers are also applicable for steam generators, unless otherwise indicated.

1.3.4 Safety accessories

"Safety accessories" means devices designed to protect pressure equipment against the allowable limits being exceeded. Such devices include:

- devices for direct pressure limitation, such as safety valves, bursting disc safety devices, buckling rods, controlled safety pressure relief systems, and
- limiting devices, which either activate the means for correction or provide for shutdown or shutdown and lockout, such as pressure switches or temperature switches or fluid level switches and safety related measurement control and regulation devices.

1.3.5 Design pressure

The design pressure is the pressure used by the manufacturer to determine the scantlings of the vessel. This pressure cannot be taken less than the maximum working pressure and is to be limited by the set pressure of the safety valve, as prescribed by the applicable Rules. Pressure is indicated as gauge pressure above atmospheric pressure, vacuum is indicated as negative pressure.

1.3.6 Design temperature

a) Design temperature is the actual metal temperature of the applicable part under the expected operating conditions, as modified in Tab 1. This temperature is to be stated by the manufacturer and is to take in account of the effect of any temperature fluctuations which may occur during the service.

b) The design temperature is not to be less than the temperatures stated in Tab 1, unless specially agreed between the manufacturer and the Society on a case by case basis.

1.3.7 Volume

Volume V means the internal volume of a chamber, including the volume of nozzles to the first connection or weld and excluding the volume of permanent internal parts.

1.3.8 Boiler heating surface

Heating surface is the area of the part of the boiler through which the heat is supplied to the medium, on the side exposed to fire or hot gases.

Table 1 : Minimum design temperature

Type of vessel	Minimum design temperature
Pressure parts of pressure vessels and boilers not heated by hot gases or adequately protected by insulation	Maximum temperature of the internal fluid
Pressure vessel heated by hot gases	25°C in excess of the temperature of the internal fluid
Water tubes of boilers mainly subjected to convection heat	25°C in excess of the temperature of the saturated steam
Water tubes of boilers mainly subjected to radiant heat	50°C in excess of the temperature of the saturated steam
Superheater tubes of boilers mainly subjected to convection heat	35°C in excess of the temperature of the saturated steam
Superheater tubes of boilers mainly subjected to radiant heat	50°C in excess of the temperature of the saturated steam
Economiser tubes	35°C in excess of the temperature of the internal fluid
For combustion chambers of the type used in wet-back boilers	50°C in excess of the temperature of the internal fluid
For furnaces, fire-boxes, rear tube plates of dry-back boilers and other pressure parts subjected to similar rate of heat transfer	90°C in excess of the temperature of the internal fluid

1.3.9 Maximum steam output

Maximum steam output is the maximum quantity of steam than can be produced continuously by the boiler or steam generator operating under the design steam conditions.

1.3.10 Toxic and corrosive substances

Toxic and corrosive substances are those which are listed in the IMO “International Maritime Dangerous Goods Code (IMDG Code)”, as amended.

1.3.11 Liquid and gaseous substances

a) Liquid substances are liquids having a vapour pressure at the maximum allowable temperature of not more than 0,5 bar above normal atmospheric pressure.

b) Gaseous substances are gases, liquefied gases, gases dissolved under pressure, vapours and also those liquids whose vapour pressure at the maximum allowable temperature is greater than 0,5 bar above normal atmospheric pressure.

1.3.12 Ductile material

For the purpose of this Section, ductile material is a material having an elongation over 12%.

1.3.13 Incinerator

Incinerator is a facility on board the unit for incinerating solid garbage approximating in composition to household garbage and liquid garbage deriving from the operation of the unit (e.g. domestic garbage, cargo-associated garbage, maintenance garbage, operational garbage, cargo residue, and fishing gear), as well as for burning sludge with a flash point above 60°C.

These facilities may be designed to use the heat energy produced.

Incinerators are not generally pressure vessels, however when their fittings are of the same type than those of boilers the requirements for these fittings apply.

1.4 Classes

1.4.1 Significant parameters

Pressure vessels are classed in three class in consideration of:

- the type of equipment: pressure vessel or steam generator
- the state (gaseous or liquid) of the intended fluid contents
- the substances listed or not in the IMDG Code
- the design pressure p, in MPa
- the design temperature T, in °C
- the actual thickness of the vessel t_A , in mm
- the volume V, in litres.

1.4.2 Pressure vessel classification

Pressure vessels are classed as indicated in Tab 2.

Table 2 : Pressure vessel classification

Equipment	Class 1	Class 2	Class 3
Steam generators or boilers	p > 3,2 and V > 2 or p V > 20 and V > 2	if not class 1 or class 3	p V ≤ 5 or V ≤ 2
Pressure vessels for toxic substances	all	–	–
Pressure vessels for corrosive substances	p > 20 or p V > 20 or T > 350	if not in class 1	–
Pressure vessels for gaseous substances	p > 100 or p V > 300	V > 1 and p V > 100 and not in class 1	all pressure vessels which are not class 1 or class 2
Pressure vessels for liquid substances	V > 10 and p V > 1000 and p > 50	V ≤ 10 and p > 100 or 1 < p ≤ 50 and p V > 1000	all pressure vessels and heat exchangers which are not class 1 or class 2
Pressure vessels for thermal oil	p > 1,6 or T > 300	if not class 1 or class 3	p ≤ 0,7 and T ≤ 150
Pressure vessels for fuel oil, lubricating oil or flammable hydraulic oil	p > 1,6 or T > 150	if not class 1 or class 3	p ≤ 0,7 and T ≤ 60
Whatever type of equipment	$t_A > 40$	$15 < t_A \leq 40$	–
Note 1: Whenever the class is defined by more than one characteristic, the equipment is to be considered belonging to the highest class of its characteristics, independently of the values of the other characteristics.			

1.4.3 Implication of class

The class of a pressure vessel has, among others, implication in:

- design
- material allowance
- welding design
- efficiency of joints
- examination and non-destructive tests
- thermal stress relieving.

See Tab 24.

1.5 Applicable Rules

1.5.1 Alternative standards

a) Boilers and pressure vessels are to be designed, constructed, installed and tested in accordance with the applicable requirements of this Section.

b) The acceptance of national and international standards as an alternative to the requirements of this Section may be considered by the Society on a case by case basis.

1.6 Documentation to be submitted

1.6.1 General

Documents mentioned in the present sub-article are to be submitted for class 1 and class 2 and not for class 3, unless the equipment is considered as critical.

1.6.2 Boilers and steam generators

The plans listed in Tab 3 are to be submitted.

The drawings listed in Tab 3 are to contain:

- the constructional details of all pressure parts, such as shells, headers, tubes, tube plates, nozzles
- strengthening members, such as stays, brackets, opening reinforcements and covers
- installation arrangements, such as saddles and anchoring system,

as well as the information and data indicated in Tab 4.

1.6.3 Pressure vessels

The plans listed in Tab 5 are to be submitted.

The drawings listed in Tab 5 are to contain the constructional details of:

- pressure parts, such as shells, headers, tubes, tube plates, nozzles, opening reinforcements and covers
- strengthening members, such as stays, brackets and reinforcements.

1.6.4 Incinerators

Incinerators are to be considered on a case by case basis, based on their actual arrangement, using the applicable requirements for boilers and pressure vessels.

Table 3 : Drawings to be submitted for boilers and steam generators

No.	A/I **(1)**	Item
1	I	General arrangement plan, including valves and fittings
2	A	Material specifications
3	A	Sectional assembly
4	A	Evaporating parts
5	A	Superheater
6	A	De-superheater
7	A	Economiser
8	A	Air heater
9	A	Tubes and tube plates
10	A	Nozzles and fittings
11	A	Safety valves and their arrangement
12	A	Boiler seating
13	I	Fuel oil burning arrangement
14	I	Forced draft system
15	I	Refractor or insulation arrangement
16	A	Boiler instrumentation, monitoring and control system
17	A	Type of safety valves and their lift, discharge rate and setting
18	A	Welding details, including at least: • typical weld joint design • welding procedure specifications • post-weld heat treatment
(1) A = To be submitted for approval ; I = To be submitted for information		

Table 4 : Information and data to be submitted for boilers and steam generators

No.	Item
1	Design pressure and temperature
2	Pressure and temperature of the superheated steam
3	Pressure and temperature of the saturated steam
4	Maximum steam production per hour
5	Evaporating surface of the tube bundles and water-walls
6	Heating surface of the economiser, superheater and air-heater
7	Surface of the furnace
8	Volume of the combustion chamber
9	Temperature and pressure of the feed water
10	Type of fuel to be used and fuel consumption at full steam production
11	Number and capacity of burners

Table 5 : Drawings, information and data to be submitted for pressure vessels and heat exchangers

No.	A/I (1)	Item
1	I	General arrangement plan, including nozzles and fittings
2	A	Sectional assembly
3	A	Safety valves (if any) and their arrangement
4	A	Material specifications
5	A	Welding details, including at least: • typical weld joint design • welding procedure specifications • post-weld heat treatments
6	I	Design data, including at least design pressure and design temperatures (as applicable)
7	A	For seamless (extruded) pressure vessels, the manufacturing process, including: • a description of the manufacturing process with indication of the production controls normally carried out in the manufacturer's works • details of the materials to be used (specification, yield point, tensile strength, impact strength, heat treatment) • details of the stamped marking to be applied
8	I	Type of fluid or fluids contained
(1) A = To be submitted for approval ; I = To be submitted for information		

2 Design and construction - Scantlings of pressure parts

2.1 General

2.1.1 Application

a) In general, the formulae in the present Article do not take into account additional stresses imposed by effects other than pressure, such as stresses deriving from the static and dynamic weight of the pressure vessel and its content, external loads from connecting equipment and foundations, etc. For the purpose of the Rules, these additional loads may be neglected, provided it can reasonably be presumed that the actual average stresses of the vessel, considering all these additional loads, would not increase more than 10% with respect to the stresses calculated by the formulae in this Article.

b) Where it is necessary to take into account additional stresses, such as dynamic loads, the Society reserves the right to ask for additional requirements on a case by case basis.

2.1.2 Alternative requirements

When pressure parts are of an irregular shape, such as to make it impossible to check the scantlings by applying the formulae of this Article, the approval is to be based on other means, such as burst and/or deformation tests on a prototype or by another method agreed upon between the manufacturer and the Society.

2.2 Materials

2.2.1 Materials for high temperatures

a) Materials for pressure parts having a design temperature exceeding the ambient temperature are to be selected by the Manufacturer and to have mechanical and metallurgical properties adequate for the design temperature. Their allowable stress limits are to be determined as a function of the temperature, as per [2.3.2].

b) When the design temperature of pressure parts exceeds 400°C, alloy steels are to be used. Other materials are subject of special consideration by the Society.

2.2.2 Materials for low temperatures

Materials for pressure parts having a design temperature below the ambient temperature are to have notch toughness properties suitable for the design temperature.

2.2.3 Cast iron

Cast iron is not to be used for:

a) class 1 and class 2 pressure vessels

b) class 3 pressure vessels with design pressure $p > 1,6$ MPa or product $p \cdot V > 1000$, where V is the internal volume of the pressure vessel in litres

c) bolted covers and closures of pressure vessels having a design pressure $p > 1$ MPa, except for covers intended for boiler shells, for which [3.2.4] applies.

Spheroidal cast iron may be used subject to the agreement of the Society following special consideration. However, it is not to be used for parts, having a design temperature exceeding 350°C.

2.2.4 Valves and fittings for boilers

a) Ductile materials are to be used for valves and fittings intended to be mounted on boilers. The material is to have mechanical and metallurgical characteristics suitable for the design temperature and for the thermal and other loads imposed during the operation.

b) Grey cast iron is not to be used for valves and fittings which are subject to dynamic loads, such as safety valves and blow-down valves, and in general for fittings and accessories having design pressure p exceeding 0,3 MPa and design temperature T exceeding 220°C.

c) Spheroidal cast iron is not to be used for parts having a design temperature T exceeding 350°C.

d) Bronze is not to be used for parts having design temperature T exceeding 220°C for normal bronzes and 260°C for bronzes suitable for high temperatures. Copper and aluminium brass are not to be used for fittings with design temperature T above 200°C and copper-nickel fittings with design temperature T exceeding 300°C.

2.2.5 Alternative materials

In the case of boilers or pressure vessels constructed in accordance with one of the standards considered acceptable by the Society as per [1.5], the material specifications are to be in compliance with the requirements of the standard used.

2.3 Permissible stresses

2.3.1 The permissible stresses K, in N/mm², for steels, to be used in the formulae of this Article, may be determined from Tab 6, Tab 7, Tab 8 and Tab 9, where R_m is the ultimate strength of the material, in N/mm². For intermediate values of the temperature, the value of K is to be obtained by linear interpolation.

Table 6 : Permissible stresses K for carbon steels intended for boilers and thermal oil heaters

Carbon steel	T (°C)	≤ 50	100	150	200	250	300	350	400
R_m = 360 N/mm² Grade HA	t ≤ 15 mm	133	109	107	105	94	77	73	72
	15 mm < t ≤ 40 mm	128	106	105	101	90	77	73	72
	40 mm < t ≤ 60 mm	122	101	99	95	88	77	73	72
R_m = 360 N/mm² Grades HB, HD	t ≤ 15 mm	133	127	116	103	79	79	72	69
	15 mm < t ≤ 40 mm	133	122	114	102	79	79	72	69
	40 mm < t ≤ 60 mm	133	112	107	99	79	79	72	69
R_m = 410 N/mm² Grade HA	t ≤ 15 mm	152	132	130	126	112	94	89	86
	15 mm < t ≤ 40 mm	147	131	124	119	107	94	89	86
	40 mm < t ≤ 60 mm	141	120	117	113	105	94	89	86
R_m = 410 N/mm² Grades HB, HD	t ≤ 15 mm	152	147	135	121	107	95	88	84
	15 mm < t ≤ 40 mm	152	142	133	120	107	95	88	84
	40 mm < t ≤ 60 mm	152	134	127	117	107	95	88	84
R_m = 460 N/mm² Grades HB, HD	t ≤ 15 mm	170	164	154	139	124	111	104	99
	15 mm < t ≤ 40 mm	169	162	151	137	124	111	104	99
	40 mm < t ≤ 60 mm	162	157	147	136	124	111	104	99
R_m = 510 N/mm² Grades HB, HD	t ≤ 60 mm	170	170	169	159	147	134	125	112

Table 7 : Permissible stresses K for carbon steels intended for other pressure vessels

Carbon steel	T (°C)	≤ 50	100	150	200	250	300	350	400
R_m = 360 N/mm² Grade HA	t ≤ 15 mm	133	117	115	112	100	83	78	77
	15 mm < t ≤ 40 mm	133	114	113	108	96	83	78	77
	40 mm < t ≤ 60 mm	130	108	105	101	94	83	78	77
R_m = 360 N/mm² Grades HB, HD	t ≤ 15 mm	133	133	123	110	97	85	77	73
	15 mm < t ≤ 40 mm	133	131	122	109	97	85	77	73
	40 mm < t ≤ 60 mm	133	119	115	106	97	85	77	73
R_m = 410 N/mm² Grade HA	t ≤ 15 mm	152	141	139	134	120	100	95	92
	15 mm < t ≤ 40 mm	152	134	132	127	114	100	95	92
	40 mm < t ≤ 60 mm	150	128	121	112	112	100	95	92
R_m = 410 N/mm² Grades HB, HD	t ≤ 15 mm	152	152	144	129	114	101	94	89
	15 mm < t ≤ 40 mm	152	152	142	128	114	101	94	89
	40 mm < t ≤ 60 mm	152	143	139	125	114	101	94	89
R_m = 460 N/mm² Grades HB, HD	t ≤ 15 mm	170	170	165	149	132	118	111	105
	15 mm < t ≤ 40 mm	170	170	161	147	132	118	111	105
	40 mm < t ≤ 60 mm	170	167	157	145	132	118	111	105
R_m = 510 N/mm² Grades HB, HD	t ≤ 60 mm	189	189	180	170	157	143	133	120

Table 8 : Permissible stresses K for alloy steels intended for boilers and thermal oil heaters

Alloy steel	T(°C)	≤ 50	100	150	200	250	300	350	400	450	475	500	525	550	575	600
0,3Mo	t ≤ 60 mm	159	153	143	134	125	106	100	94	91	89	87	36			
1Cr 0,5Mo	t ≤ 60 mm	167	167	157	144	137	128	119	112	106	104	103	55	31	19	
2,25Cr 1Mo **(1)**	t ≤ 60 mm	170	167	157	147	144	137	131	125	119	115	112	61	41	30	22
2,25Cr 1Mo **(2)**	t ≤ 60 mm	170	167	164	161	159	147	141	130	128	125	122	61	41	30	22

(1) Normalised and tempered
(2) Normalised and tempered or quenched and tempered

Table 9 : Permissible stresses K for alloy steels intended for other pressure vessels

Alloy steel	T(°C)	≤ 50	100	150	200	250	300	350	400	450	475	500	525	550	575	600
0,3Mo	t ≤ 60 mm	159	159	153	143	133	113	107	100	97	95	93	38			
1Cr 0,5Mo	t ≤ 60 mm	167	167	167	154	146	137	127	119	113	111	110	59	33	20	
2,25Cr 1Mo **(1)**	t ≤ 60 mm	183	174	167	157	154	146	140	133	127	123	119	65	44	32	23
2,25Cr 1Mo **(2)**	t ≤ 60 mm	174	174	174	172	170	157	150	139	137	133	130	65	44	32	23

(1) Normalised and tempered
(2) Normalised and tempered or quenched and tempered

2.3.2 Direct determination of permissible stress

The permissible stresses K, where not otherwise specified, may be taken as indicated below.

a) Steel:

The permissible stress is to be the minimum of the values obtained by the following formulae:

$$K = \frac{R_{m,20}}{2,7}$$

$$K = \frac{R_{S,MIN,T}}{A}$$

$$K = \frac{S_A}{A}$$

where:

$R_{m,20}$: Minimum tensile strength at ambient temperature (20°C), in N/mm²

$R_{S,MIN,T}$: Minimum between R_{eH} and $R_{p\,0,2}$ at the design temperature T, in N/mm²

S_A : Average stress to produce creep rupture in 100000 hours, in N/mm², at the design temperature T

A : Safety factor taken as follows, when reliability of $R_{S,MIN,T}$ and S_A values are proved to the Society's satisfaction:

- 1,6 for boilers and other steam generators
- 1,5 for other pressure vessels
- specially considered by the Society if average stress to produce creep rupture in more than 100000 hours is used instead of S_A

In the case of steel castings, the permissible stress K, calculated as above, is to be decreased by 20%. Where steel castings are subjected to non-destructive tests, a smaller reduction up to 10% may be taken into consideration by the Society.

b) Spheroidal cast iron:

The permissible stress is be to the minimum of the values obtained by the following formulae:

$$K = \frac{R_{m,20}}{4,8}$$

$$K = \frac{R_{S,MIN,T}}{3}$$

c) Grey cast iron:

The permissible stress is obtained by the following formula:

$$K = \frac{R_{m,20}}{10}$$

d) Copper alloys:

The permissible stress is obtained by the following formula:

$$K = \frac{R_{m,T}}{4}$$

where:

$R_{m,T}$: Minimum tensile strength at the design temperature T, in N/mm².

e) Aluminium and aluminium alloys:

The permissible stress is to be the minimum of the values obtained by the following formulae:

$$K = \frac{R_{m,T}}{4}$$

$$K = \frac{R_{e,H}}{1,5}$$

where:

$R_{e,H}$: Minimum yield stress, in N/mm².

f) Additional conditions:

- in special cases the Society reserves the right to apply values of permissible stress K lower than those specified above, in particular for lifting appliance devices and steering gear devices
- in the case of boilers or other steam generators, the permissible stress K is not to exceed 170 N/mm²
- for materials other than those listed above the permissible stress is to be agreed with the Society on a case by case basis.

2.4 Cylindrical, spherical and conical shells with circular cross-sections subject to internal pressure

2.4.1 Cylindrical shell thickness

a) The minimum thickness of cylindrical, spherical and conical shells with circular cross-sections is not to be less than the value t, in mm, calculated by one of the following formulae, as appropriate. Cylindrical tube plates pierced by a great number of tube holes are to have thickness calculated by the applicable formulae in [2.4.3], [2.4.4], [2.4.5] and [2.9.2].

b) The thicknesses obtained by the formulae in [2.4.3], [2.4.4] and [2.4.5] are "net" thicknesses, as they do not include any corrosion allowance. The thickness obtained by the above formulae is to be increased by 0,75 mm. See also [2.4.7].

2.4.2 Efficiency

a) The values of efficiency e to be used in the formulae in [2.4.3], [2.4.4] and [2.4.5] are indicated in Tab 10.

b) The manufacturer may propose a factor e lower than those indicated in Tab 10 where consistent with the factor used in the formulae of [2.4.3], [2.4.4] and [2.4.5] and with the provisions of specific requirements according to class as per [4.9], [4.10] or [4.11]. The proposed efficiency factor is to be agreed by the Society.

Table 10 : Efficiency of unpierced shells

Case	e
Seamless shells	1
Shells of class 1 vessels **(1)**	1
Shells of class 2 vessels (with partial radiographic examination of butt-joints)	0,85
Shells of class 2 vessels with actual thickness ≤ 15 mm (without radiographic examination of butt-joints)	0,75
(1) In special cases the Society reserves the right to take a factor e < 1, depending on the welding procedure adopted for the welded joint.	

2.4.3 Cylindrical shells

a) When the ratio external diameter/inside diameter is equal to or less than 1,5, the minimum thickness of cylindrical shells is given by the following formula:

$$t = \frac{pD}{(2K - p)e}$$

where:

p : Design pressure, in MPa

D : Inside diameter of vessel, in mm

K : Permissible stress, in N/mm², obtained as specified in [2.3]

e : Efficiency of welded joint, the value of which is given in [2.4.2].

b) The minimum thickness of shells having ratio external diameter/inside diameter exceeding 1,5 is subject of special consideration.

2.4.4 Spherical shells

a) When the ratio external diameter/inside diameter is equal to or less than 1,5, the minimum thickness of spherical shells is given by the following formula:

$$t = \frac{pD}{(4K - p)e}$$

For the meaning of the symbols, see [2.4.3].

b) The minimum thickness of shells having ratio external diameter/inside diameter exceeding 1,5 is subject of special consideration.

2.4.5 Conical shells

a) The following formula applies to conical shells of thickness not exceeding 1/6 of the external diameter in way of the large end of the cone:

$$t = \frac{pD}{(2K - p)e \cdot \cos\varphi}$$

For the meaning of the symbols, see [2.4.3].

D is measured in way of the large end of the cone and φ is the angle of slope of the conical section of the shell to the pressure vessel axis (see Fig 1). When φ exceeds 75°, the shell thickness is to be taken as required for flat heads, see [2.7].

b) The minimum thickness of shells having thickness exceeding 1/6 of the external diameter in way of the large end of the cone is subject of special consideration.

c) Conical shells may be made of several ring sections of decreasing thickness. The minimum thickness of each section is to be obtained by the formula in a) using for D the maximum diameter of the considered section.

d) In general, the junction with a sharp angle between the conical shell and the cylindrical or other conical shell, having different angle of slope, is not allowed if the angle of the generating line of the shells to be assembled exceeds 30°.

e) The shell thickness in way of knuckles is subject of special consideration by the Society.

Figure 1 : Conic shells

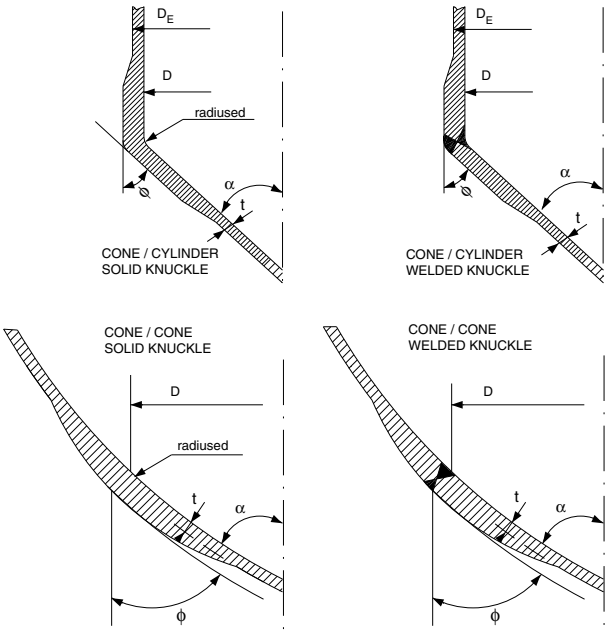

2.4.6 Minimum thickness of shells

Irrespective of the value calculated by the formulae in [2.4.3], [2.4.4] or [2.4.5], the thickness t of shells is not to be less than one of the following values, as applicable:

- for pressure vessels: t = 3 + D/1500 mm
- for unpierced plates of boilers: t = 6,0 mm
- for boiler cylindrical tube plates: t = 9,5 mm.

No corrosion allowance needs to be added to the above values.

2.4.7 Corrosion allowance

The Society reserves the right to increase the corrosion allowance value in the case of vessels exposed to particular accelerating corrosion conditions. The Society may also consider the reduction of this factor where particular measures are taken to effectively reduce the corrosion rate of the vessel.

2.5 Dished heads subject to pressure on the concave (internal) side

2.5.1 Dished head for boiler headers

Dished heads for boiler headers are to be seamless.

2.5.2 Dished head profile

The following requirements are to be complied with for the determination of the profile of dished heads (see Fig 2 (a) and (b)).

a) Ellipsoidal heads:

$H \geq 0{,}2\ D$

where:

H : External depth of head, in mm, measured from the start of curvature at the base.

b) Torispherical heads:

$R_{IN} \leq D$

$r_{IN} \geq 0{,}1\ D$

$r_{IN} \geq 3\ t$

$H \geq 0{,}18\ D$

where:

R_{IN} : Internal radius of the spherical part, in mm

r_{IN} : Internal knuckle radius, in mm

H : External depth of head calculated by the following formula (see Fig 2 (b)):

$H = R_E - [(R_E - 0{,}5\ D) \cdot (R_E + 0{,}5\ D - 2\ r_E)]^{0,5}$

where:

R_E : External radius of the spherical part, in mm

r_E : External knuckle radius, in mm.

2.5.3 Required thickness of solid dished heads

a) The minimum thickness of solid (not pierced) hemispherical, torispherical, or ellipsoidal unstayed dished heads, subject to pressure on the concave (internal) side, is to be not less than the value t, in mm, calculated by the following formula:

$$t = \frac{pDC}{2Ke}$$

where:

C : Shape factor, obtained from the graph in Fig 3, as a function of H/D and t/D.

For other symbols, see [2.4.3].

b) The thickness obtained by the formula in item a) is “net” thickness, as it does not include any corrosion allowance. The thickness obtained by the above formula is to be increased by 0,75 mm. See also [2.4.7].

2.5.4 Composed torispherical heads

a) Torispherical heads may be constructed with welded elements of different thicknesses (see Fig 4).

b) Where a torispherical head is built in two sections, the thickness of the torispherical part is to be obtained by the formula in [2.5.3], while the thickness of the spherical part may be obtained by the formula in [2.4.4].

c) The spherical part may commence at a distance from the knuckle not less than:

$0{,}5 \cdot (R_{IN} \cdot t)^{0,5}$

where:

R_{IN} : Internal radius of the spherical part, in mm

t : Knuckle thickness, in mm.

Figure 2 : Dished head profiles

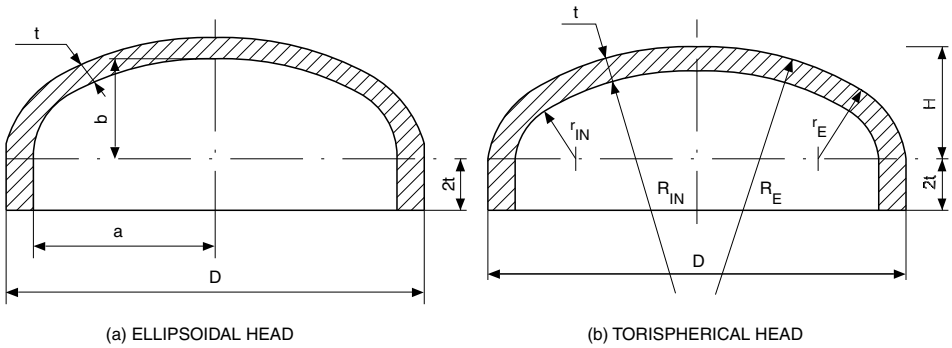

Figure 3 : Shape factor for dished heads

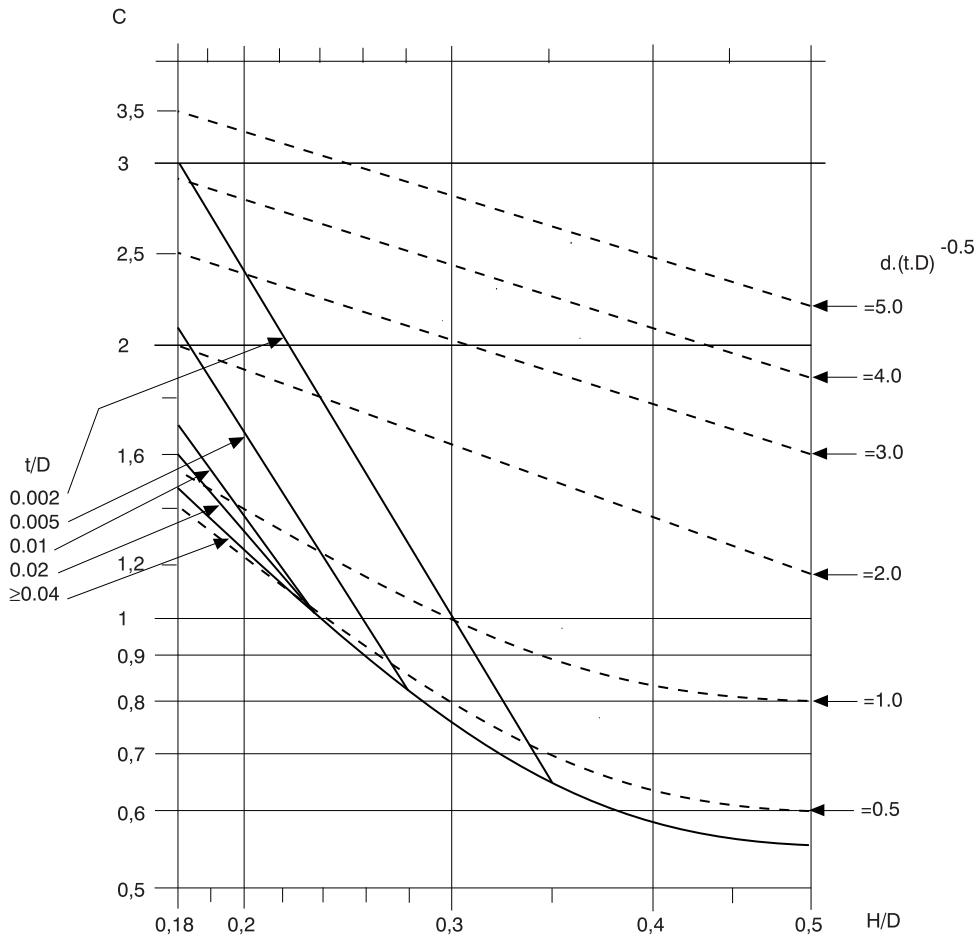

Figure 4 : Composed torispherical head

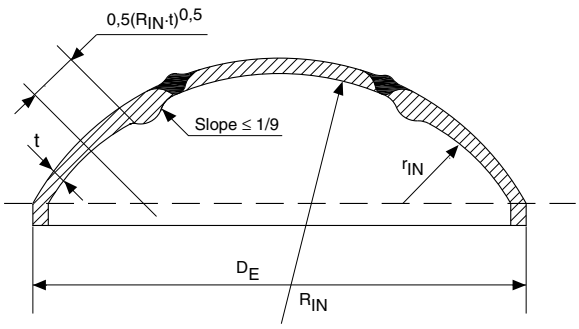

2.5.5 Minimum thickness of dished heads

Irrespective of the values calculated in [2.5.2] and [2.5.3], the thickness t of dished heads is not to be less than:

- $3 + D_E / 1500$ mm for normal pressure vessels
- 6 mm for boiler pressure vessels.

No corrosion allowance needs to be added to the above values.

2.5.6 Connection of heads to cylindrical shells

The heads are to be provided, at their base, with a cylindrical skirt not less than 2t in length and with a thickness in no case less than the Rule thickness of a cylindrical shell of the same diameter and the same material, calculated by the formula given in [2.4.3] using the same efficiency factor e adopted for calculation of the head thickness. Fig 5 and Fig 6 show typical admissible attachments of dished ends to cylindrical shells.

In particular, hemispherical heads not provided with the above skirt are to be connected to the cylindrical shell if the latter is thicker than the head, as shown in Fig 5.

Other types of connections are subject to special consideration by the Society.

Figure 5 : Typical attachment of dished heads to cylindrical shells

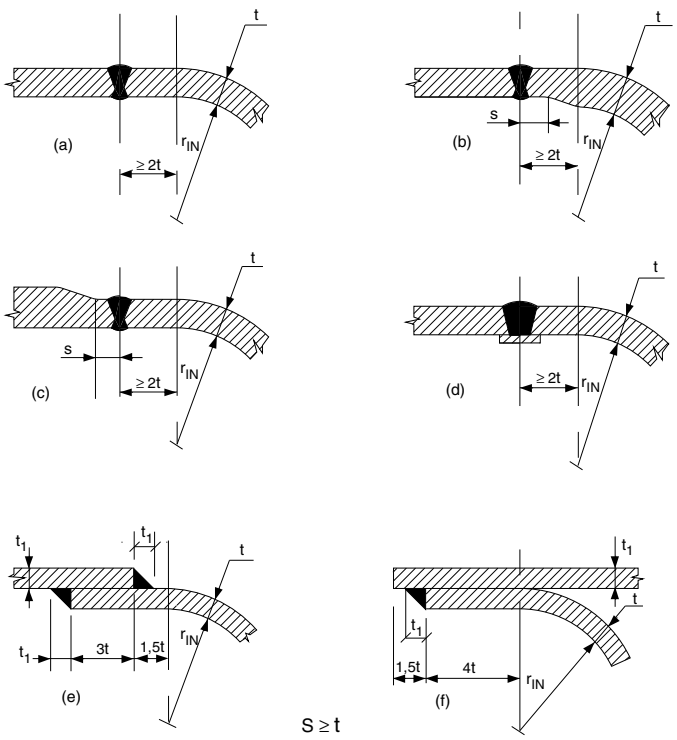

Types shown in (a), (b) and (c) are acceptable for all pressure vessels.

Type shown in (d) is acceptable for class 2 and class 3 pressure vessels.

Types shown in (e) and (f) are acceptable for class 3 pressure vessels only.

Figure 6 : Connection of hemispherical head to the cylindrical shell

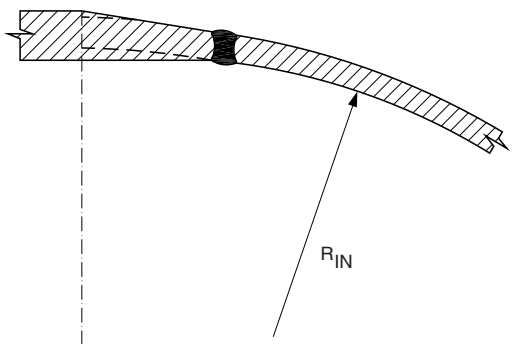

2.6 Dished heads subject to pressure on the convex (external) side

2.6.1 The calculation of the minimum thickness is to be performed according to a standard accepted by the Society.

In addition, the thickness of torispherical or ellipsoidal heads under external pressure is no to be less than 1,2 times the thickness required for a head of the same shape subject to internal pressure.

2.7 Flat heads

2.7.1 Unstayed flat head minimum thickness

a) The minimum thickness of unstayed flat heads is not to be less than the value t, in mm, calculated by the following formula:

$$t = D\left(\frac{100p}{CK}\right)^{0,5}$$

where:

p : Design pressure, in MPa

K : Permissible stress, in N/mm², obtained as specified in [2.3]

D : Diameter of the head, in mm. For circular section heads, the diameter D is to be measured as shown in Fig 7 and Fig 8 for various types of heads. For rectangular section heads, the equivalent value for D may be obtained from the following formula:

$$D = a\left[3{,}4 - 2{,}4\left(\frac{a}{b}\right)\right]^{0,5}$$

a and b being the smaller and larger side of the rectangle, respectively, in mm

C : The values given below, depending on the various types of heads shown in Fig 7 and Fig 8:

Fig 7(a) : C = 400 for circular heads

Fig 7(b) : C = 330 for circular heads

Fig 7(c) : C = 350 for circular heads

Fig 7(d) : C = 400 for circular heads and
C = 250 for rectangular heads

Fig 7(e) : C = 350 for circular heads and
C = 200 for rectangular heads

Fig 7(f) : C = 350 for circular heads

Fig 7(g) : C = 300 for circular heads

Fig 7(h) : C = 350 for circular heads and
C = 200 for rectangular heads

Fig 8(i) : C = 350 for circular heads and
C = 200 for rectangular heads

Fig 8(j) : C = 200 for circular heads

Fig 8(k) : C = 330 for circular heads

Fig 8(l) : C = 300 for circular heads

Fig 8(m) : C = 300 for circular heads

Fig 8(n) : C = 400 for circular heads

Fig 8(o) : C = value obtained from the following formula, for circular heads:

$$C = \frac{100}{0{,}3 + \frac{1{,}9Fh}{pD^3}}$$

where:

h : Radial distance, in mm, from the pitch centre diameter of bolts to the circumference of diameter D, as shown in Fig 8(o)

F : Total bolt load, in N, to be taken as the greater of the following values F_1 and F_2:

$F_1 = 0{,}785\ D\ p\ (D + m\ b)$

$F_2 = 9{,}81\ y\ D\ b$

with:

b : Effective half contact width of the gasket, in mm, calculated as follows:

$b = 0{,}5\ N$ for $N \leq 13$ mm, and

$b = 1{,}8\ N^{0,5}$ for $N > 13$ mm

where N is the geometric contact width of the gasket, in mm, as indicated in Fig 8 (o)

m, y : Adimensional coefficients, whose values are given in Tab 11, depending on the type of gasket.

The adoption of one of the above-mentioned heads is subject to the Society's approval depending upon its use. Types of heads not shown in Fig 7 and Fig 8 are to be the subject of special consideration by the Society.

b) The thickness obtained by the formulae in a) is "net" thickness, as it does not include any corrosion allowance. The thickness obtained by the above formula is to be increased by 1 mm. See also [2.4.7].

2.7.2 Stayed flat head minimum thickness

For the minimum thickness of stayed flat heads, see [2.12.3].

Figure 7 : Types of unstayed flat heads (1)

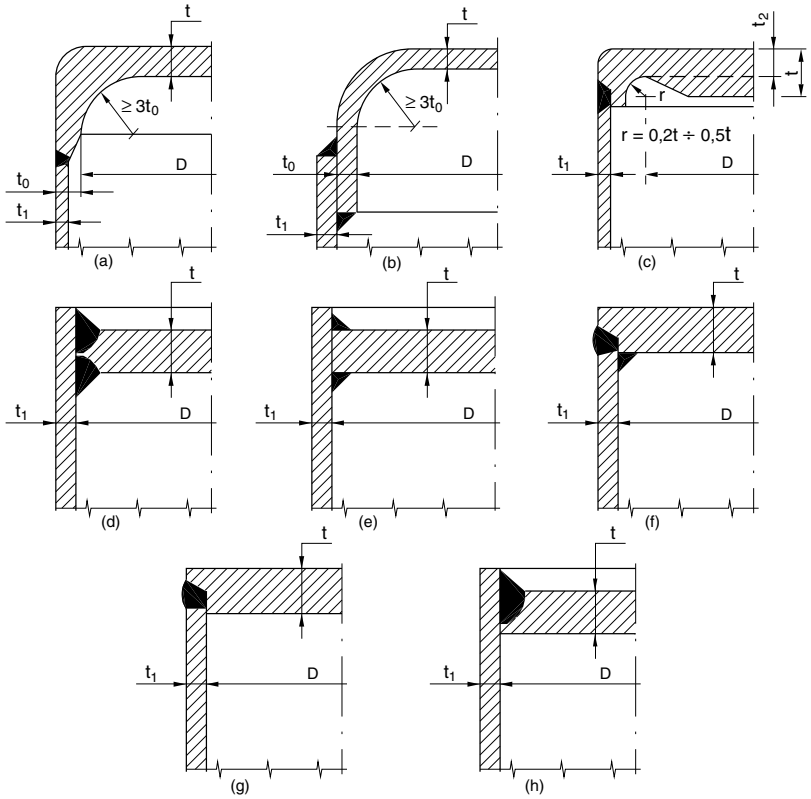

Figure 8 : Types of unstayed flat heads (2)

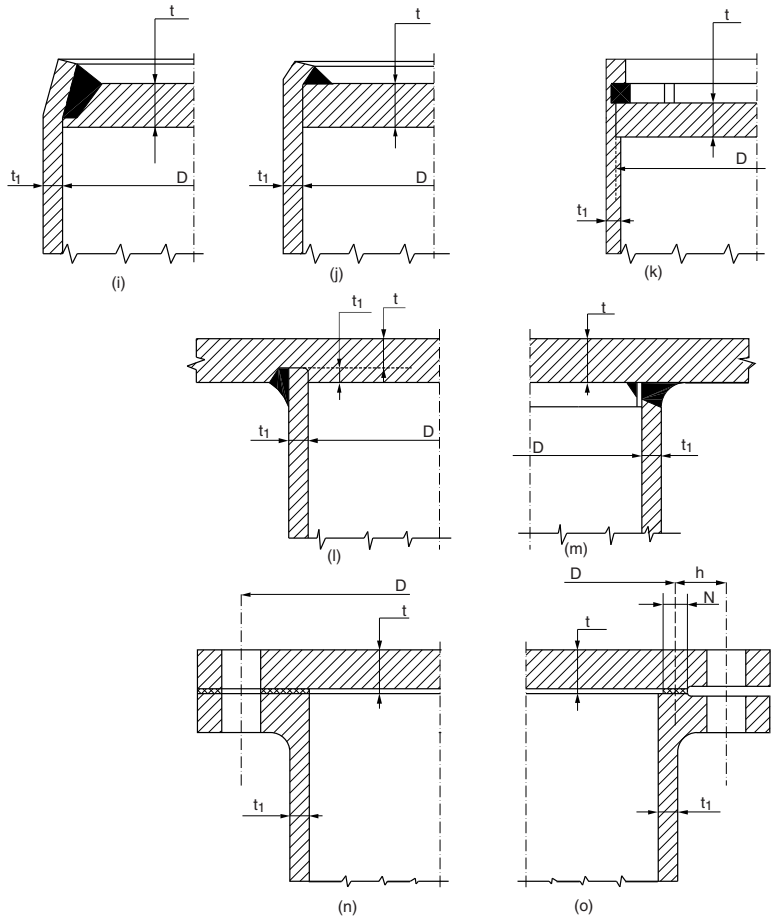

Table 11 : Coefficients m and y

Type of gasket	m	y
Self-sealing, metal or rubber (e.g. O-ring)	0	0
Rubber with cotton fabric	10	0,88
Rubber with reinforcing fabric with or without metal wire:		
- 3 layers	18	4,85
- 2 layers	20	6,4
- 1 layers	22	8,2
Synthetic fibre with suitable binders:		
- 3,0 mm thick	16	3,5
- 1,5 mm thick	22	8,2
Organic fibre	14	2,4
Metal spiral lined with synthetic fibre:		
- carbon steel	20	6,4
- stainless steel	24	9,9
Synthetic fibre with plain metal lining:		
- copper	28	14,0
- iron	30	16,8
- stainless steel	30	20,0
Solid metal:		
- copper	38	28,7
- iron	44	39,8
- stainless steel	52	57,5

2.8 Openings and branches (nozzles)

2.8.1 Nozzles thickness

a) The thickness e_b, in mm, of nozzles attached to shells and headers of boilers is not to be less than:

$$e_b = \frac{d_E}{25} + 2,5$$

where d_E is the outside diameter of nozzle, in mm.

The thickness of the nozzle is, however, to be not less than the thickness required for the piping system attached to the vessel shell calculated at the vessel design pressure, and need not to be greater than the thickness of the shell to which it is connected.

b) The thickness of the nozzle attached to shells and headers of other pressure vessels is not to be less than the thickness required for the piping system attached to the vessel shell calculated at the vessel design pressure, and need not be greater than the thickness of the shell to which it is connected.

c) Where a branch is connected by screwing, the thickness of the nozzle is to be measured at the root of the thread.

2.8.2 Nozzle connection to vessel shell

a) In general, the axis of the nozzle is not to form an angle greater than 15° with the normal to the shell.

b) Fig 30 to Fig 33 show some typical acceptable connections of nozzles to shells. Other types of connections are to be considered by the Society on a case by case basis.

2.8.3 Openings in shells

a) In general, the largest dimensions of the openings in shells are not to exceed:

- for shells up to 1500 mm in diameter D_E:

  1/2 D_E, but not more than 500 mm

- for shells over 1500 mm in diameter D_E:

  1/3 D_E, but not more than 1000 mm,

where D_E is the vessel external diameter, in mm.

Greater values may be considered by the Society on a case by case basis.

b) In general, in oval or elliptical openings the ratio major diameter/minor diameter is not to exceed 2.

2.8.4 Openings compensation in cylindrical shells

a) Compensation methods

For cylindrical shells with openings, the efficiency of the main body is to be satisfied by one of the following methods:

- by increasing the wall thickness of main body compared with that of the cylindrical shell without opening: see Fig 9
- by branches which have been provided with a wall thickness of that required on account of the internal pressure: see Fig 10 and Fig 11
- by reinforcing pads or rings analogous to increasing the wall thickness: see Fig 12 and Fig 13
- by a combination of previous reinforcement.

b) Definitions

Effective lengths ℓ_{rs} required for calculation of efficiency and of compensations is to be taken as:

$$\ell_{rs} = \min(\sqrt{Dt_a}, \ell_{s1})$$

where:

D : Outside diameter, in mm

t_a : Available thickness, in mm

ℓ_{s1} : Transition length, in mm, according to Fig 9 and Fig 10.

Figure 9 : Reinforcement by increasing the wall thickness of the main body with opening

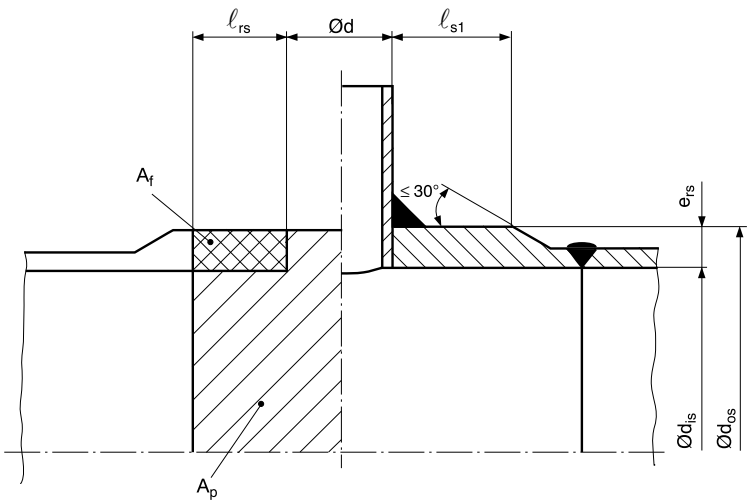

Figure 10 : Reinforcement by set-through and full penetration welded branch

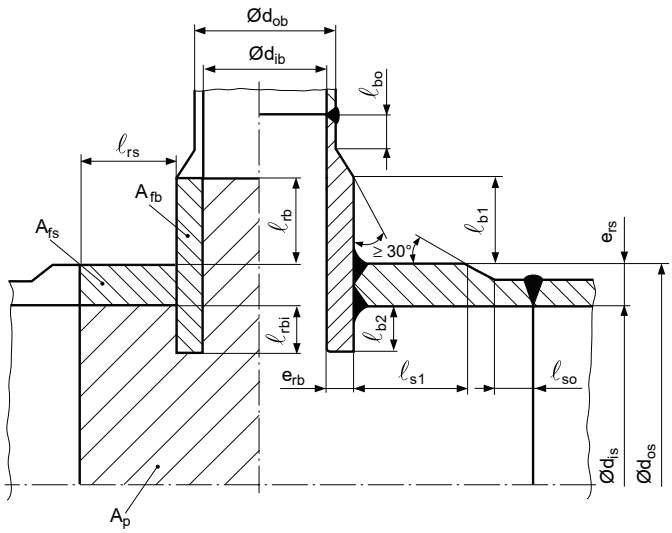

c) Basic calculation

The required wall thickness without allowance of a cylindrical shell is determined with the following formula (see [2.4.3]):

$$t = \frac{pD}{(2K - p)e}$$

With the available thickness t_a, we obtain the available efficiency e_a and the maximum diameter d_{obmax} of an unreinforced opening when the average stress of the main body is equal to the permissible stress K:

$$e_a = \frac{pD_i}{(2K - p)t_a}$$

$$d_{obmax} = 2\left[\frac{\ell_{rs}}{e_a} - \ell_{rs}\right]$$

where:

D_i : Internal diameter of the main body, in mm.

d) Isolated opening reinforcement

The reinforcement of isolated openings as indicated in Fig 9 to Fig 13 are to be in respect with:

$$\frac{A_p}{A_f} \le \frac{K}{p} - 0,5$$

where:

K : Permissible stress in the shell, in N/mm²

A_f : Total area of cross section (wall and branch and pad)

A_p : Total area under pressure p.

In Fig 9 to Fig 13, ℓ_{rs}, ℓ_{rb} and ℓ_{rbi} are effective lengths for calculation of efficiencies and compensation, equal to:

- for shell:

$$\ell_{rs} = \min(\sqrt{(D + e_{rs})e_{rs}}, \ell_{s1})$$

- for external branch projection:

$$\ell_{rb} = \min(\sqrt{(d_{ib} + e_{rb})e_{rb}}, \ell_{b1})$$

- for internal branch projection:

$$\ell_{rbi} = \min(0,5\sqrt{(d_{ib} + e_{rb})e_{rb}}, \ell_{b2})$$

Figure 11 : Reinforcement by welded on branch

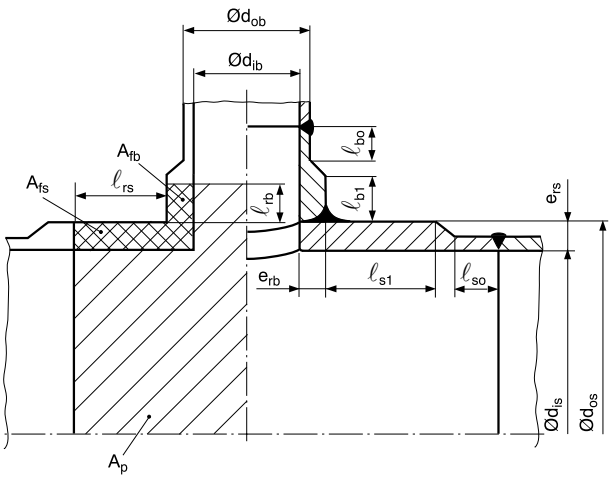

Figure 12 : Opening with reinforcing pad

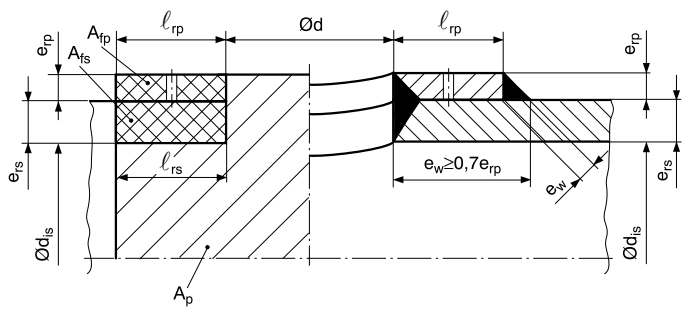

Figure 13 : Opening with reinforcing pad and full penetration branch

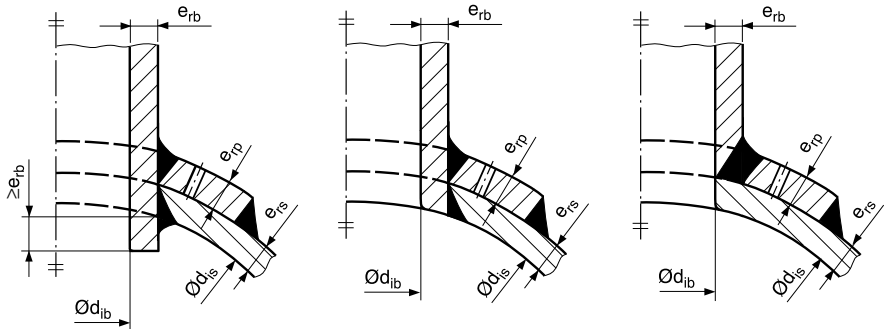

a) set through welded branch b) set in welded branch c) set on welded branch

e) Condition of isolated openings

- Full case

  Adjacent openings are to be treated as isolated openings if the centre distance P_ϕ, in accordance with Fig 16, is not less than:

$$\frac{\left(\frac{d_{ib1}}{2}+e_{rb1}\right)}{\cos\Psi_1}+\frac{\left(\frac{d_{ib2}}{2}+e_{rb2}\right)}{\cos\Psi_2}+2\sqrt{(d_{is}+e_{rs})e_{rs}}$$

  For variable definition see Fig 14 and Fig 15.

- Simplification
  - For openings without branch:

    $e_{rb} = 0$ and $\Psi = 0$
  - For openings with nozzles perpendicular to shell:

    The openings are to be treated as isolated openings if the centre distance P_ϕ in accordance with Fig 16 is not less than:

$$\left(\frac{d_{ib1}}{2}+e_{rb1}\right)+\left(\frac{d_{ib2}}{2}+e_{rb2}\right)+2\sqrt{(d_{is}+e_{rs})e_{rs}}$$

Figure 14 : Angle definition for cylindrical shell with oblique branch

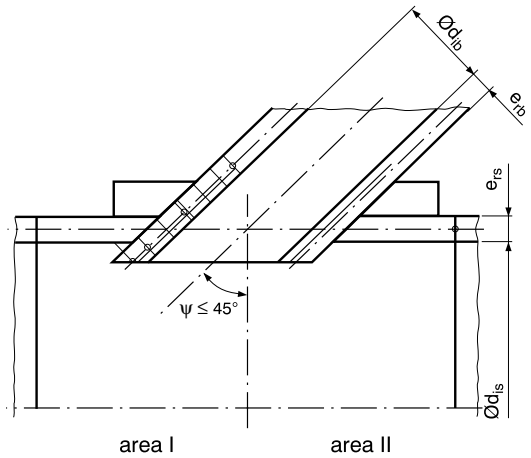

Figure 15 : Angle definition for cylindrical shell with non-radial branch

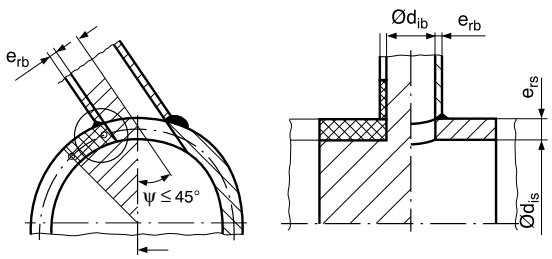

f) Adjacent openings

Where the condition of isolated openings is not fulfilled, the compensation is to be calculated, using Fig 16, as per the following formula:

$$\frac{A_p}{A_f} \leq \frac{K}{p} - 0,5$$

Figure 16 : Load diagram for cylindrical shell with adjacent branches

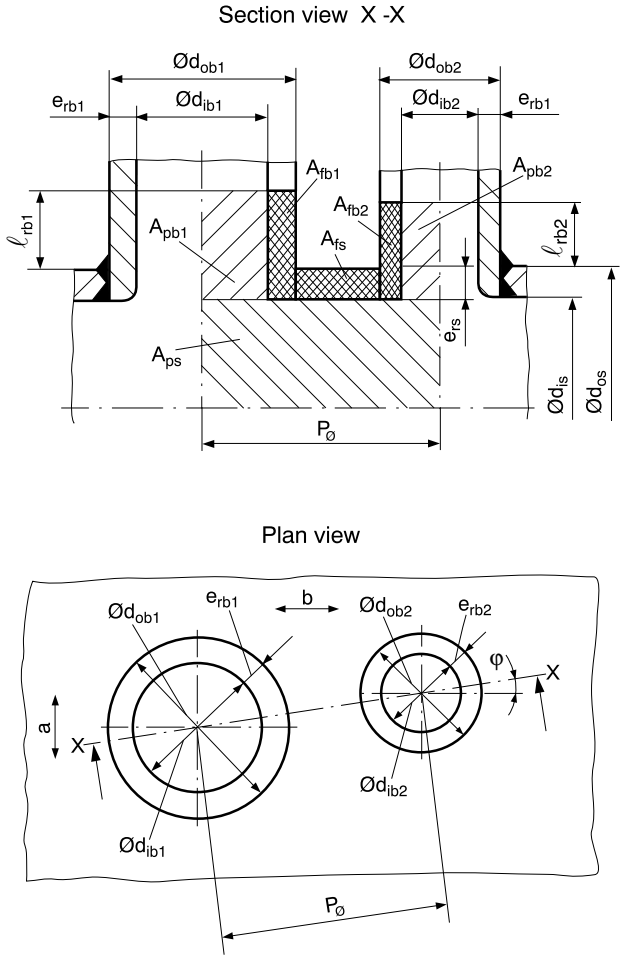

a : Circumferential direction

b : Longitudinal direction

2.8.5 Openings in dished heads

a) The openings in dished heads may be circular, elliptical or oval.

b) The largest diameter of the non-compensated opening is not to exceed one half of the external diameter of the head.

c) The opening is to be so situated that its projection, or its reinforcement projection in the case of compensated openings, is completely contained inside a circle having its centre at the centre of the head and a diameter of 0,8 D, D being the external diameter of the head (see Fig 17). However, a small reinforced opening for drainage may be accepted outside the indicated area.

d) In the case of non-compensated openings (for this purpose, flanged openings are also to be considered as non-compensated), the head thickness is not to be less than that calculated by the formula in [2.5.3] using the greatest of the shape factors C obtained from the graph in Fig 3 as a function of:

- H / D and t / D, or
- H / D and d $(t\,D)^{-0,5}$

where d is the diameter of the largest non-compensated opening in the head, in mm. For oval and elliptical openings, d is the width of the opening in way of its major axis.

e) In all cases the diameter D of the head base, the head thickness t and the diameter d of the largest non-compensated opening are to be such as to meet the following requirements:

- the position of non-compensated openings in the heads is to be as shown in Fig 17
- for flanged openings, the radius r of the flanging (see Fig 17) is not to be less than 25 mm
- the thickness of the flanged part may be less than the rule thickness.

Figure 17 : Openings on dished heads

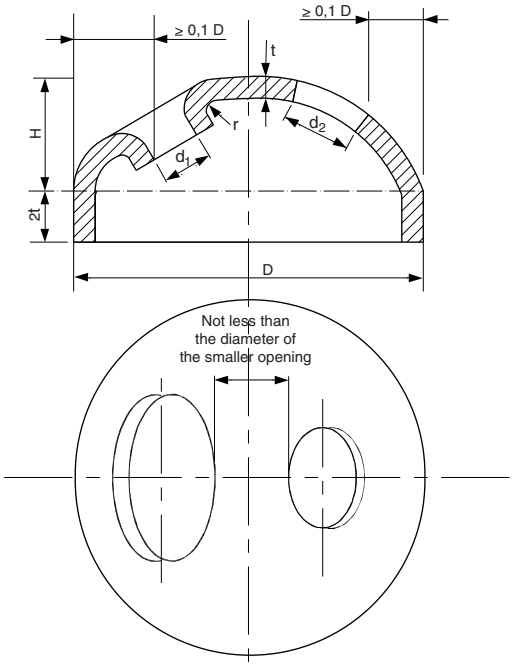

2.8.6 Opening compensation in dished heads

a) Where openings are cut in dished heads and the proposed thickness of the head is less than that calculated by the formula in [2.5.3] with the greatest of the shape factor C according to [2.5.3] the opening is to be compensated, the openings are to be compensated.

b) Fig 30, Fig 31, Fig 32 and Fig 33 show typical connections of nozzles and compensating rings.

c) The opening is considered sufficiently compensated when the head thickness t is not less than that calculated in accordance with [2.5.3] and using the shape-factor C obtained from the graph in Fig 3 using the value:

$$\left(d - \frac{A}{t}\right)(tD)^{-0,5}$$

instead of:

$d\,(t\,D)^{-0,5}$

where:

A : Area, in mm², of the total transverse section of the compensating parts

t : Actual thickness of the head, in mm, in the zone of the opening under consideration.

d) When A / t > d, the coefficient C is to be determined using the curve corresponding to the value:

$d\,(t\,D)^{-0,5} = 0$

e) If necessary, calculations are to be repeated.

2.8.7 Compensation criteria

In the evaluation of the area A, the following is also to be taken into consideration:

a) The material that may be considered for compensating an opening is that located around the opening up to a distance l from the edge of the opening. The distance l, in mm, is the lesser obtained from the following formulae:

$l = 0,5\,d$

$l = (2\,R_{IN}\,t)^{0,5}$

where:

d : Diameter of the opening, in mm

R_{IN} : Internal radius of the spherical part, in mm, in the case of hemispherical or torispherical heads

In the case of ellipsoidal heads, R_{IN} is to be calculated by the following formula (see Fig 2 (a):

$$R_{IN} = \frac{[a^4 - x^4(a^2 - b^2)]^{3/2}}{a^4 b}$$

where:

a : Half the major axis of the elliptical meridian section of the head, in mm

b : Half the minor axis of the above section, in mm

x : Distance between the centre of the hole and the rotation axis of the shell, in mm.

b) In the case of nozzles or pads welded in the hole, the section corresponding to the thickness in excess of that required is to be considered for the part which is subject to pressure and for a depth h, in mm, both on the external and internal sides of the head, not greater than:

$(d_B\ t_B)^{0,5}$

where d_B and t_B are the diameter of the opening and the thickness of the pad or nozzle, in mm, respectively.

c) The area of the welding connecting nozzle and pad reinforcements may be considered as a compensating section.

d) If the material of reinforcement pads, nozzles and collars has a permissible stress lower than that of the head material, the area A, to be taken for calculation of the coefficient C, is to be reduced proportionally.

2.8.8 Openings in flat end plates

The maximum diameter of an unreinforced opening in a flat end plate is to be determined from the equation:

$$d_{max} = 8e_{rh}\left[1,5\frac{e_{rh}^2}{e_{ch}^2} - 1\right]$$

where:

e_{rh} : Actual thickness of the flat end, in mm

e_{ch} : Required calculated thickness of the flat end, in mm.

2.8.9 Opening compensation in flat end plate

Reinforcement of branch openings is to be achieved by taking account of locally disposed material, including the attachment welds, in excess of the minimum requirements for end plate and branch thickness as shown in Fig 18. The branch thickness is to be increased where required. Compensation is to be considered adequate when the compensating area Y is equal to or greater than the area X requiring compensation.

Area X is to be obtained by multiplying 25% of the inside radius of the branch by the thickness of the flat end plate, calculated for the part of the end plate under consideration.

Area Y is to be measured in a plane through the axis of the branch parallel to the surface of the flat end plate, and is to be calculated as follows:

a) For that part of the branch which projects outside the boiler, calculate the full sectional area of the branch up to a distance ℓ_b from the actual outer surface of the flat end plate and deduct from it the sectional area that the branch would have within the same distance if its thickness were calculated in accordance with equation given in [2.4.3]

b) Add to it the full sectional area of that part of the branch that projects inside the boiler (if any) up to a distance ℓ_b from the inside surface of the flat end plate

c) Add to it the sectional area of the fillet welds

d) Add to it the area obtained by multiplying the difference between the actual flat end plate thickness and its thickness calculated for the part of the end plate under consideration by the length ℓ_s

e) Add to it the area of the compensating plate (if any) within the limits of reinforcement shown in Fig 18.

Where material having a lower allowable stress than that of the flat end plate is taken as compensation, its effective area is to be reduced in the ratio of the allowable stresses at the calculation temperature. No credit is to be taken for the additional strength of material having a higher allowable stress than that of the flat end plate

Welds attaching branches and compensating plates are to be capable of transmitting the full strength of the reinforcing area and all other loadings to which they may be subjected.

2.8.10 Covers

a) Circular, oval and elliptical inspection openings are to be provided with steel covers. Inspection openings with a diameter not exceeding 150 mm may be closed by blind flanges.

b) The thickness of the opening covers is not to be less than the value t, in mm, given by the following formula:

$$t = 1,22a\left(\frac{pC}{K}\right)^{0,5}$$

where:

a : The minor axis of the oval or elliptical opening, measured at half width of gasket, in mm

b : The major axis of the oval or elliptical opening, measured at half width of the gasket, in mm

C : Coefficient in Tab 12 as a function of the ratio b/a of the axes of the oval or elliptical opening, as defined above. For intermediate values of the ratio b/a, the value of C is to be obtained by linear interpolation.

For circular openings the diameter d, in mm, is to be used in the above formula instead of a.

c) The thickness obtained by the formula in item a) is “net” thickness, as it does not include any corrosion allowance. The thickness obtained by the above formula is to be increased by 1 mm for classification purpose. See also [2.4.7].

Table 12 : Coefficient C for oval or elliptical covers

b/a	1,00	1,05	1,10	1,15	1,20	1,25	1,30	1,40	1,50	1,60
C	0,206	0,220	0,235	0,247	0,259	0,271	0,282	0,302	0,321	0,333
b/a	1,70	1,80	1,90	2,00	2,50	3,00	3,50	4,00	4,50	5,00
C	0,344	0,356	0,368	0,379	0,406	0,433	0,449	0,465	0,473	0,480

Figure 18 : Compensation for branch in flat end plate

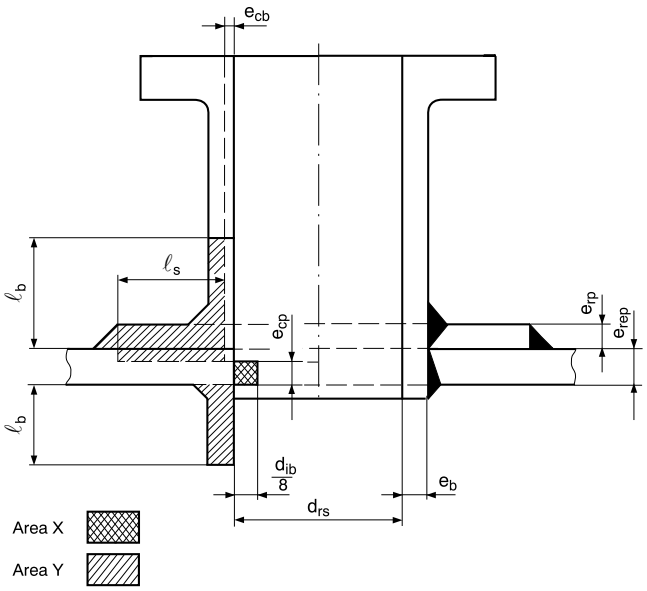

e_{cp} : Thickness calculated in accordance with equation in [2.8.1] for the part under consideration

e_{cb} : Thickness calculated taking efficiency = 1

ℓ_b : The smaller of the two values: 2,5 e_{rep} and (2,5 e_b + e_{rp})

ℓ_s : The greater of the two values: (e_{rep} + 75) and (d_{ib} / 4)

Area Y is not to be less than area X.

The compensating plate is required only in cases where area Y would otherwise be less than area X.

2.9 Regular pattern openings - Tube holes

2.9.1 Definition

Openings may be considered as regular pattern openings when not less than three non isolated openings are disposed in regularly staggered rows in longitudinal or circular direction of a shell.

In such a case, instead of a direct calculation of the compensation of openings, the thickness of the shell could be calculated by application of applicable formulae given in [2.4], [2.5] with a reduced efficiency e as indicated in [2.9.2] and [2.9.3].

This requirement apply for pressure vessels and for boiler.

2.9.2 Efficiency factor of tube holes in cylindrical tube plates

The efficiency factor e of pipe holes in cylindrical shells pierced by tube holes is to be determined by direct calculation or by another suitable method accepted by the Society. In the case of cylindrical holes of constant diameter and radial axis, the efficiency factor e may be determined by the following formula (see Fig 19):

$$e = \frac{1}{\frac{s}{s-d}[1-(0{,}5\sin^2\alpha)] + m\sin 2\alpha}$$

where:

s : Pitch of the hole row considered, in mm

d : Diameter of holes, in mm. The hole diameter d may be reduced by the amount Y/e_{cp} where Y is the compensating area, in mm², of nozzle and welds and e_{cp} the calculated unpierced shell thickness, see [2.8.9] and Fig 18

α : Angle between the axis of hole row considered and the axis of the cylinder (α = 0° if the hole row is parallel to the cylinder generating line; α = 90° for circumferential hole row)

m : Coefficient depending upon the ratio d/s, as obtained from Tab 13. For intermediate values of d/s, the value of m is to be obtained by linear interpolation.

The value of e actually used is to be the smallest calculated value for either longitudinal, diagonal or circumferential rows of holes.

Table 13 : Coefficient m

d/s	0,30	0,35	0,40	0,45	0,50	0,55	0,60	0,65	0,70	0,75	0,80
m	0,137	0,175	0,220	0,274	0,342	0,438	0,560	0,740	1,010	1,420	2,060

Figure 19 : Hole pattern in cylindrical shells

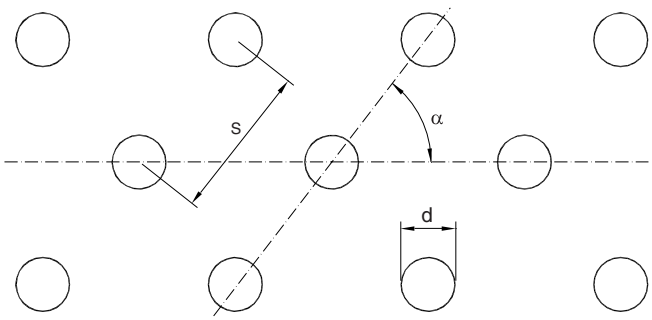

2.9.3 Welded shells with tube holes and efficiency factor of different hole patterns

Where shells have welding butts and/or different groups of hole patterns, the value to be assumed for the efficiency e in the formulae is the minimum of the values calculated separately for each type of welding (as per [2.4.2]) and for each configuration of holes (as per [2.9.1]).

2.9.4 Rectangular section headers

a) For seamless type headers of rectangular section design, the wall thickness t, in mm, in way of corner fillets and the thickness t_1, in mm, of any drilled wall is not to be less than those given by the following formulae, as appropriate (see Fig 20):

$$t = \left(\frac{100pM_1}{K}\right)^{0,5}$$

$$t_1 = \left(\frac{100pM_2}{eK}\right)^{0,5}$$

where (see also Fig 20):

t : Wall thickness at the corners, in mm

t_1 : Thickness of drilled wall, in mm

p : Design pressure, in MPa

K : Permissible stress, in N/mm², obtained as specified in [2.3]

a : Internal half width of the header, in a direction parallel to the wall under consideration, in mm

b : Internal half width of the header, in a direction normal to the wall under consideration, in mm

c : Distance between the axis of the hole row considered and the centreline of the header wall, in mm

e : Efficiency factor of holes in the wall, determined by the following formulae:

$$e = \frac{s-d}{s} \quad \text{for } d < a$$

$$e = \frac{s-0,67d}{s} \quad \text{for } a \le d < 1,3a$$

$$e = \frac{s-0,33d}{s} \quad \text{for } d \ge 1,3a$$

where:

s : Pitch of the holes, in mm, of the longitudinal or diagonal row under consideration. For a staggered pattern of holes the pitch of the diagonal row is to be considered

d : Diameter of the holes, in mm

M_1 : Coefficient to be calculated by the following formula:

$$M_1 = \frac{a^2+b^2-ab}{50}$$

M_2 : Coefficient (to be taken always positive) to be calculated by one of the following formulae, as appropriate:

- for a non-staggered pattern of holes:

$$M_2 = \frac{b^2-\frac{1}{2}a^2-ab+\frac{3}{2}c^2}{50}$$

- for a staggered pattern of holes:

$$M_2 = \frac{b^2 - \frac{1}{2}a^2 - ab}{50}\cos\alpha$$

where α is the angle between the axis of the diagonal row of the holes under consideration and the axis of the header, in the case of a staggered pattern of holes.

b) The thickness obtained by the formulae in a) is "net" thickness, as it does not include any corrosion allowance. The thickness obtained by the above formula is to be increased by 1,5 mm. See also [2.4.7].

Figure 20 : Rectangular section headers

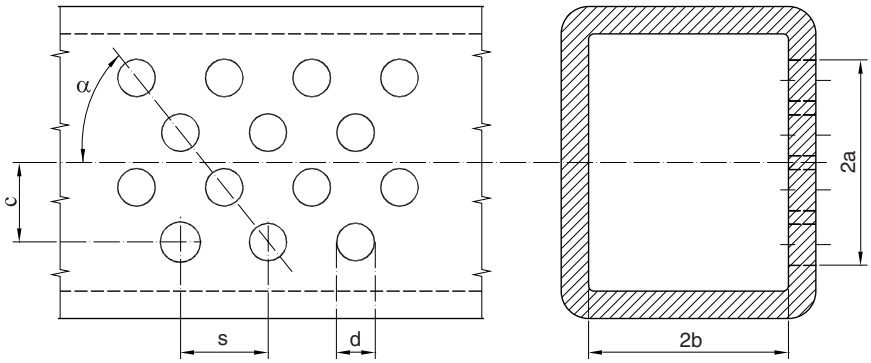

2.10 Water tubes, superheaters and economiser tubes of boilers

2.10.1

a) The thickness of tubes of evaporating parts, economisers and superheaters exposed to gases which are subject to internal pressure is not to be less than the value t given by the following formula:

$$t = \frac{pd}{2K + p} + 0{,}3$$

where:

p : Design pressure, in MPa

K : Permissible stress, in N/mm², obtained as specified in [2.3]

d : Outside diameter of tube, in mm.

However, irrespective of the value calculated by the formulae in item a), the thickness t of tubes is not to be less than the values given in Tab 14.

b) The values of t determined by the above-mentioned formula are to be considered as theoretical values for straight tubes, not taking account of the manufacturing tolerance. Where the tubes are not sized precision tubes, the thickness calculated by the formula in item a) is to be increased by 12,5% to take into account the manufacturing tolerance. For bent tubes, the thickness of the thinner part in way of the bend is not to be less than that given by the formula.

c) Whenever abnormal corrosion and erosion may occur during service, the corrosion constant of 0,3 in the formula may be increased to the satisfaction of the Society.

d) The thickness of tubes which form an integral part of the boiler and which are not exposed to combustion gases is to comply with the requirements for steam pipes (see Ch 1, Sec 7, [15]).

Table 14 : Minimum thickness of water tubes

Outside diameter, in mm	Minimum thickness, in mm, of tubes subject to internal pressure of cylindrical boilers and water tube boilers having the feed water system	
	Closed type, if equipped with suitable devices for reducing the oxygen concentration in the water	Open type, not equipped with suitable devices for reducing the oxygen concentration in the water
< 38	1,8	2,9
38 - 48,3	2,0	2,9
51 - 63,5	2,4	2,9
70	2,6	3,2
76,1 - 88,9	2,9	3,2
101,6 - 127	3,6	–

2.11 Additional requirements for fired pressure vessels

2.11.1 Insulation for headers and combustion chambers

Those parts of headers and/or combustion chambers which are not protected by tubes and are exposed to radiant heat or to high temperature gases are to be covered by suitable insulating material.

2.11.2 Connections of tubes to drums and tube plates

Tubes are to be adequately secured to drums and/or tube plates by expansion, welding or other appropriate procedure.

a) Where the tubes are secured by expanding or equivalent process, the height of the shoulder bearing the tube, measured parallel to the tube axis, is to be at least 1/5 of the hole diameter, but not less than 9 mm for tubes normal to the tube plate or 13 mm for tubes angled to the tube plate. The tubes ends are not to project over the other face of the tube plate more than 6 mm.

b) The tube ends intended to be expanded are to be partially annealed when the tubes have not been annealed by the manufacturer.

2.12 Additional requirements for vertical boilers and fire tube boilers

2.12.1 General

The scantlings of the shells of vertical boilers and fire tube boilers are to be determined in accordance with [2.4].

2.12.2 Ends of vertical boilers

a) The minimum thickness of the dished ends forming the upper part of vertical boilers and subject to pressure on their concave face is to be determined in accordance with [2.5].

b) When the end is supported in its centre by an uptake, the minimum thickness t, in mm, is to be calculated with the following formula:

$$t = 0{,}77\frac{pR_I}{K}$$

where:

p : Design pressure, in MPa

K : Permissible stress, in N/mm², obtained as specified in [2.3]

R_I : Radius of curvature at the centre of the end measured internally. R_I is not to exceed the external diameter of the shell.

c) The thickness obtained by the formula in item b) is “net” thickness, as it does not include any corrosion allowance. The thickness obtained by the above formula is to be increased by 0,7 mm. See also [2.4.7].

d) For ends supported by an uptake at their centre, the corner radius measured internally is not to be less than 4 times the end thickness or 65 mm, whichever is the lesser and the inside radius of curvature on the flange to uptake is not to be less than twice the end thickness or 25 mm, whichever is the lesser.

2.12.3 Supported flat head

a) Breathing space

- Stays are to give breathing space around the furnace tube connections and tube nests and equally divide the unstayed areas. Breathing space between furnace tube and tube nests are to be a minimum of 50 mm or 5% of the shell outside diameter, whichever is the larger, but need not be more than 100 mm.
- Breathing space between furnace tube and shell depends on the thickness of the plate of the type of end and of the dimensions of the boiler but is to be not less than 50 mm or, for bowling hoop furnaces tubes, not less than 75 mm.

b) The thickness of stayed flat heads, or of heads supported by flanges, is not to be less than the value t, in mm, given by the following formula:

$$t = D\left[\frac{100p}{CC_1K(1 + C_2B^2)}\right]^{0.5}$$

where:

B : Ratio of the thickness of the large washer or doubler, where fitted, to the thickness of the plate:

$B = t_1 / t$

The value of B is to be taken between 0,67 and 1

K : Permissible stress, in N/mm², obtained as specified in [2.3]

C :
- C = 1,00 when the plate is not exposed to flame
- C = 0,88 when the plate is exposed to flame

C_1 :
- C_1 = 462 when the plate is supported by welded stay
- C_1 = 704 for plates supported by flanges or equivalent

C_2 : • C_2 = 0 when no doublers are fitted

• C_2 = 0,85 when a complete doubling plate is fitted, adequately joined to the base plate.

The value of D is to be in accordance with the following provisions:

- In the parts of the flat heads between the stays:

  D : Diameter, in mm, of the largest circle which can be drawn through the centre of at least three stays without enclosing any other stay, where the stays are not evenly spaced (see Fig 21); or

  $D = (a^2 + b^2)^{0,5}$ where the stays are evenly spaced, considering the most unfavourable condition

  where:

  a : Distance between two adjacent rows of stays, in mm

  b : Pitch of stays in the same row, in mm.

- In the parts of the flat heads between the stays and the boundaries, where flat heads are generally supported by flanges or shapes, or connected to other parts of the boiler:

  D : Diameter, in mm, of the largest circle which can be drawn through not less than three points of support (stay centres or points of tangency of the circle with the contour line). To this end, the contour of the part under consideration is to be drawn at the beginning of the flanging or connection curve if its inside radius does not exceed 2,5 times the thickness of the plate, or, where such radius is greater, at the above-mentioned distance (of 2,5 times the thickness of the plate) from the ideal intersection with other surfaces (see Fig 21).

c) When applying the formulae for calculation of thickness of heads covered by this sub-article, the position of plates in the most unfavourable condition is to be considered.

d) Where various types of supports are provided, the value of C_1 should be the arithmetic mean of the values of C_1 appropriate to each type of support.

e) The thickness obtained by the formulae in a), is "net" thickness, as it does not include any corrosion allowance. The thickness obtained by the above formula is to be increased by 1 mm. See also [2.4.7].

Figure 21 : Flat heads

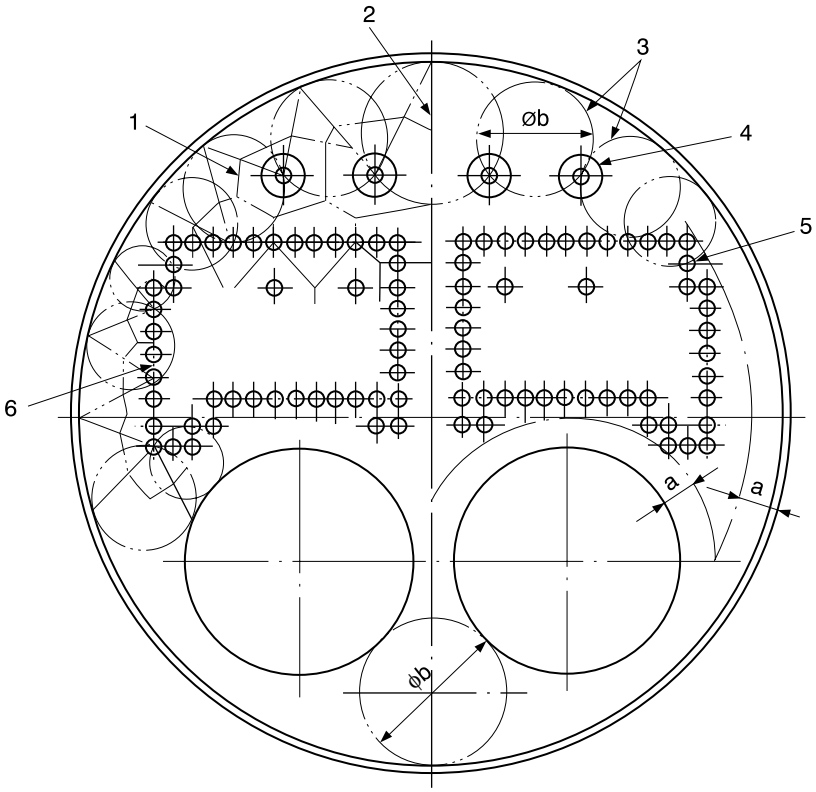

Key:

1 : Boundaries of areas supported by individual stays

2 : To establish the area supported by bar stays or stay tubes in boundary rows, the boundary of the loaded area is to terminate at the centre of the associated main circle

3 : Main circles, diameter b

4 : Bar stays

5 : Stay tubes

6 : Termination of boundary areas where stay tubes are situated in the boundary rows only.

2.12.4 Flat tube plates

a) Flat tube plates in tube bundles

The thickness of the parts of flat tube plates contained in the tube bundle and supported by stay tubes is not to be less than the value t, in mm, given by the following formula:

$$t = s\left(\frac{p}{2{,}8K}\right)^{0{,}5}$$

where:

p : Design pressure, in MPa

K : Permissible stress, in N/mm², obtained as specified in [2.3]

s : Pitch of stay tubes, taken as the greatest mean pitch of the stay tubes supporting a quadrilateral portion of the plate, in mm.

Moreover the spacing of tube holes (diameter d) is to be such that the minimum width, in mm, of any ligament between the tube holes is to be not less than:

- for expanded tubes: (0,125 d + 12,5) mm
- for welded tubes:
  - for gas entry temperatures greater than 800°C: (0,125 d + 9) mm, but need not exceed 15 mm
  - for gas entry temperatures less than or equal to 800°C: 0,125 d + 7) mm, but need not exceed 15 mm.

Moreover the calculated thickness of tube plates is to be not less than the following:

- 12 mm where the tubes are expanded into the tube plate when the diameter of the tube hole does not exceed 50 mm, or 14 mm when the diameter of the tube hole is greater than 50 mm, or
- 6 mm where the tubes are attached to the tube plate by welding only.

b) Flat tube plates of combustion chamber in vertical boilers

Where tube plates contained in the tube bundle are simultaneously subject to compression due to the pressure in the combustion chamber, their thickness, as well as complying with the requirements in item a) is not to be less than the value t, in mm, given by the following formula:

$$t = \frac{pls_1}{1{,}78(s_1 - d)K}$$

where:

l : Depth of the combustion chamber, in mm

s_1 : Horizontal pitch of tubes, in mm

d : Inside diameter of plain tubes, in mm.

For the meaning of other symbols, see item a).

c) Tube plates outside tube bundles

For those parts of tube plates which are outside the tube bundle, the formula in [2.13.3] is to be applied, using the following coefficients C_1 and C_2:

$C_1 = 390$

$C_2 = 0{,}55$

Doublers are only permitted where the tube plate does not form part of a combustion chamber.

d) Tube plates not supported by stays

Flat tube plates which are not supported by stay tubes (e.g. in heat exchangers), are subject of special consideration by the Society (see also [2.14]).

e) Stay and stay tube scantling

- The diameter of solid stays of circular cross-section is not to be less than the value d calculated by the following formula:

$$d = \left(\frac{pA}{K}\right)^{0{,}5}$$

where:

d : Minimum diameter, in mm, of the stay throughout its length

A : Area supported by the stay, in mm²

K : $K = R_m / 7$

R_m : Minimum ultimate tensile strength of the stay material, in N/mm².

The cross section of tube stays is to be equivalent to that of a solid stay supporting the same area, whose diameter is calculated by the above formula.

Stays which are not perpendicular to the supported surface are to be of an adequately increased diameter depending on the component of the force normal to the plate.

- Where articulated stays are used, articulation details are to be designed assuming a safety factor for articulated elements not less than 5 with respect to the value of R_m and a wear allowance of 2 mm.

  The articulation is to be of the fork type and the clearance of the pin in respect of the holes is not to exceed 1,5 mm. The pin is to bear against the jaws of the fork and its cross-sectional area is not to be less than 80% of the cross-sectional area of the stay. The width of material around the holes is not to be less than 13 mm.
- Where stays are flanged for joining to the plate, the thickness of the flange is not to be less than one half the diameter of the stay.
- For welded connections of stays to tube plates, see Fig 37.

f) Stay and stay tubes construction
- In general, doublers are not to be fitted in plates exposed to flame.
- As far as possible, stays are to be fitted perpendicularly to the supported surface.
- Long stays in double front boilers and, in general, stays exceeding 5 m in length, are to be supported at mid-length.
- Where the ends of stay tubes are of increased thickness, the excess material is to be obtained by forging and not by depositing material by means of welding.
- After forging, the ends of stay tubes are to be stress relieved.

g) Gusset stays

Tube plate may be supported by gussets stays with full penetration welds to plate and shell.

The general shape and the scantling are to be in accordance with a standard accepted by the Society.

h) Girders

Where tops of combustion chambers, or similar structures, are supported by girders of rectangular section associated with stays, the thickness of the single girder or the aggregate thickness of all girders, at mid-length, is not to be less than the value t determined by the appropriate formula below, depending upon the number of stays.

- In case of an odd number of stays:

$$t = \frac{pL(L-s)l}{0{,}25 R_m a^2} \cdot \frac{n+1}{n}$$

- In case of an even number of stays:

$$t = \frac{pL(L-s)l}{0{,}25 R_m a^2} \cdot \frac{n+2}{n+1}$$

where:

p	:	Design pressure, in MPa
a	:	Depth of the girder plate at mid-length, in mm
L	:	Length of girder between supports, in mm
s	:	Pitch of stays, in mm
n	:	Number of stays on the girder
l	:	Distance between centres of girders, in mm
R_m	:	Minimum ultimate tensile strength of the material used for the plates, in N/mm^2.

The above formulae refer to the normal arrangement where:
- The stays are regularly distributed over the length L.
- The distance from the supports of the outer stays does not exceed the uniform pitch s.
- When the tops of the combustion chambers are connected to the sides with curved parts with an external radius less than 0,5 l, the distance of end girders from the inner part of the side surface does not exceed l.
- When the curvature radius mentioned under item just above exceeds 0,5 l, the distance of the end girders from the beginning of the connection does not exceed 0,5 l.

In other cases a direct calculation is to be made using a safety factor not less than 5, with respect to the minimum value of the tensile strength R_m.

i) Ogee rings

The thickness of ogee rings connecting the furnaces to the shell in vertical auxiliary boilers (see Fig 22), where the latter support the weight of the water above the furnace, is not to be less than the value t, in mm, given by the following formula:

$$t = [1{,}02 \cdot 10^{-3}\, p\, D_A\, (D_A - d_A)]^{0{,}5} + 1$$

where:

p	:	Design pressure, in MPa
D_A	:	Inside diameter of boiler shell, in mm
d_A	:	Inside diameter of the lower part of the furnace where it joins the ogee ring, in mm.

Figure 22 : Ogee ring

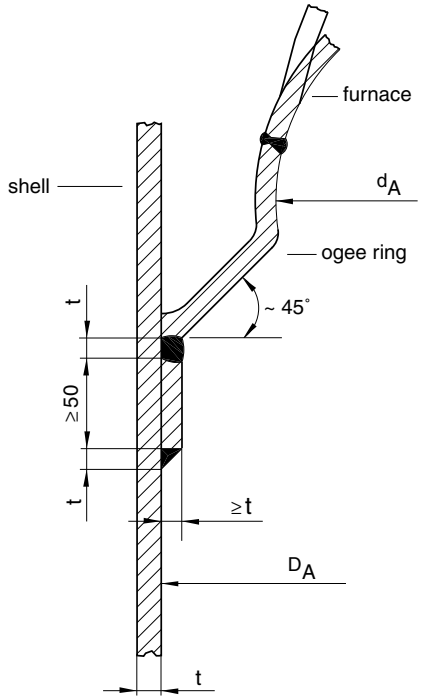

2.12.5 Fire tubes

a) The thickness of fire tubes subject to external pressure in cylindrical boilers is not to be less than the value t, in mm, calculated by the following formula:

$$t = \frac{pd}{0{,}15R_m} + 1{,}8$$

where:

p : Design pressure, in MPa

d : Outside diameter of tube, in mm

R_m : Minimum ultimate tensile strength of the tube material, in N/mm².

The minimum acceptable thickness is given in Tab 15.

b) The values of t determined by the above-mentioned formula are to be considered as theoretical values for straight tubes, not taking account of the manufacturing tolerance. Where the tubes are not sized precision tubes, the thickness calculated by the formula in a) is to be increased by 12,5% to take into account the manufacturing tolerance. In the case of bent tubes, the thickness of the thinner part in way of the bend is not to be less than that given by the above formula.

c) Whenever abnormal corrosion and erosion may occur during service the corrosion constant of 1,8 in the formula may be increased to the satisfaction of the Society.

Table 15 : Minimum thickness of fire tubes

Nominal outside diameter	Lowest nominal thickness t
d ≤ 88,9	3,00
88,9 < d ≤ 114,3	3,15
114,3 < d ≤139,7	3,50
139,7 < d ≤168,3	3,99

2.12.6 Furnaces general points

a) Thermal design of furnace tubes.

The heat input for a given furnace tube inside diameter is not to exceed a value compatible with the chosen design temperature. Burners with a fixed firing rate are not to be used for heat inputs exceeding 1 MW per furnace tube.

b) The minimum thickness of furnaces is to be calculated for elastic buckling and plastic deformation in accordance with the requirements of a Standard for pressure vessels subject to external pressure accepted by the Society.

c) However, the minimum thicknesses of furnaces and cylindrical ends of combustion chambers of fire tube boilers are to be not less than the value t given by the appropriate formulae in [2.12.7], [2.12.8] and [2.12.9].

d) The thickness of furnaces is not to be less than 8 mm for plain furnace and 10 mm for corrugated furnace and the stays are to be spaced such that the thickness does not exceed 22 mm.

e) All the thicknesses obtained for furnaces by the formulae in [2.12.7], [2.12.8], [2.12.9] and [2.12.4] are "net" thicknesses, as they do not include any corrosion allowance. The thicknesses obtained by the above formulae are to be increased by 1 mm. See also [2.4.7].

2.12.7 Plain furnace tubes

a) Plain furnace tube

The minimum thickness t of plain cylindrical furnaces is to be not less than the greater value, in mm, obtained from the following formulae:

$$t = \frac{B}{2}\left[1 + \sqrt{1 + \frac{0,12Du}{(1+5D/L)B}}\right]$$

$$t = D^{0,6}\left[\frac{LS_2p}{2,6E}\right]^{0,4}$$

where:

$$B = \frac{pDS_1}{2R_{S,MIN,T}(1+5D/L)}$$

S_1 : Safety factor, equal to 2,5

L : Unstayed length of furnace, in mm

u : Departure from circularity, in %, equal to:

$$u = \frac{2(D_{max} - D_{min})}{D_{max} + D_{min}} \cdot 100$$

u is to be taken as 1,5% for plain furnace tubes

S_2 : Safety factor for buckling, equal to:

- 3 for u ≤1,5%
- 4 for 1,5% < u ≤ 2%

E : Elastic modulus, in MPa, at design temperature T, in °C, and equal to:

E = 208800 – 93,4 T

b) Stiffeners

Stiffeners welded to furnaces tubes according to a standard accepted by the Society may be considered as providing effective stiffening (reduction of L in upper formulae).

2.12.8 Corrugated furnace tubes

The minimum thickness of corrugated furnace tubes, in mm, is to be determined by:

$$t = \frac{pD_E}{0,26R_m}$$

where:

D_E : External diameter of the furnace, in mm, measured at the bottom of the corrugation.

This formula apply for Fox and Morisson type furnaces tubes. The scantling of furnaces of other types and the use of stiffeners are to be especially considered by the Society.

2.12.9 Hemispherical furnaces

The minimum thickness t, in mm, of hemispherical furnaces is not to be less than the value given by the following equation:

$$t = \frac{pD_E}{120}$$

2.13 Bottles containing pressurised gases

2.13.1 General

a) The following requirements apply to bottles intended to contain pressurised and/or liquefied gases at ambient temperature, made by seamless manufacturing processes.

b) In general, such bottles are to have an outside diameter not exceeding 420 mm, a length not exceeding 2000 mm and a capacity not exceeding 150 litres (see also [3.4.1]).

c) For bottles exceeding the above capacity and dimensions, the following requirements may be applied at the discretion of the Society.

2.13.2 Cylindrical shell

The wall thickness of the cylindrical shell is not to be less than the value t, in mm, determined by the following formula:

$$t = \frac{p_H D_E}{2K + p_H}$$

where:

p_H : Hydrostatic test pressure, in MPa. This pressure is to be taken as 1,5 times the setting pressure of the safety valves with the following exceptions:

- in addition, for CO_2 bottles, this pressure is not to be less than 25 MPa
- for refrigerants, the value of hydrostatic test pressure is given in Part F, Chapter 7 of the Ship Rules

D_E : Outside diameter of tube, in mm

$K = R_{S,MIN} / 1,3$

$R_{S,MIN}$: Value of the minimum yield strength (R_{eH}), or 0,2% proof stress ($R_{p\,0,2}$), at the ambient temperature, in N/mm². In no case is the value $R_{S,MIN}$ to exceed:

- 0,75 R_m for normalised steels
- 0,90 R_m for quenched and tempered steels.

2.13.3 Dished heads

Dished ends are to comply with the following requirements:

a) Hemispherical ends: the thickness of the ends is to be not less than the thickness calculated for spherical shells in accordance with [2.4.4]

b) Convex ends: see Fig 23

c) Concave base ends: see Fig 24

d) Ends with openings: see Fig 25

e) Other types of ends are to be specially considered by the Society.

Figure 23 : Dished convex ends

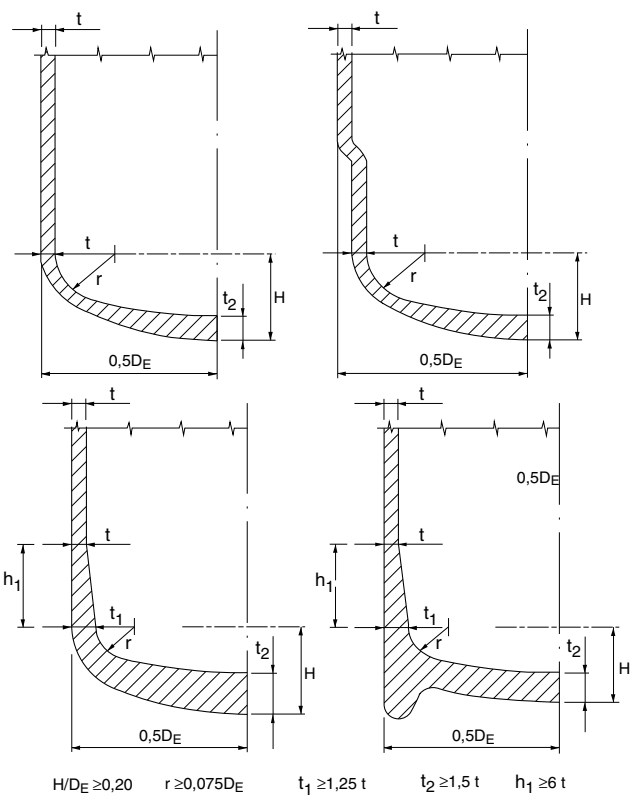

Figure 24 : Dished concave ends

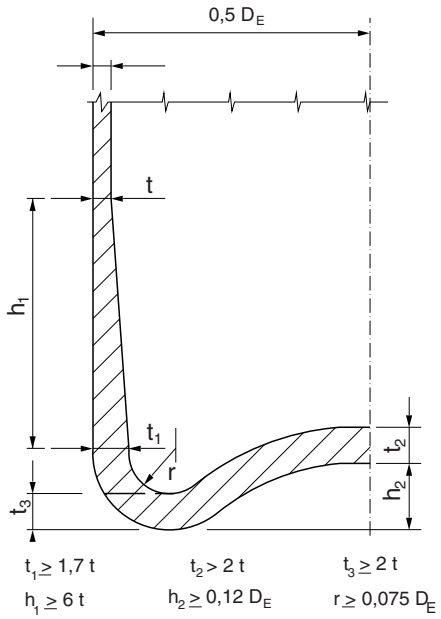

Figure 25 : Heads with openings

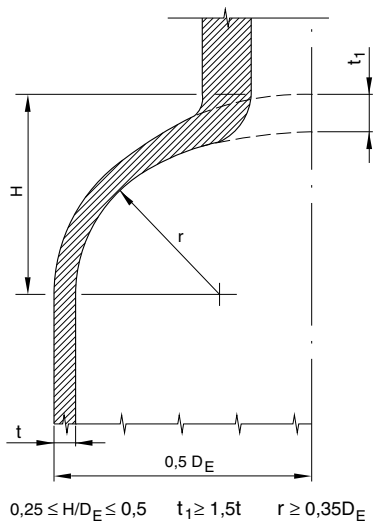

2.14 Heat exchangers

2.14.1 Scantlings

a) Vessels are to be designed in accordance with the applicable requirements stated in [2.4] and [2.5].

b) Tubes are to be designed in accordance with [2.10.1].

c) Tube plates are to be designed in accordance with a standard accepted by the Society.

2.14.2 Thermal oil heat exchangers

The provisions of [2.14.1] apply also to thermal oil heat exchangers. However, irrespective of the thickness obtained by the formula in [2.10.1], the tube thickness of oil fired and exhaust fired thermal oil heaters is to be not less than the values indicated in Tab 16.

Table 16 : Minimum thickness of thermal oil heat exchanger tubes

Outside diameter, in mm	Minimum thickness, in mm, of tubes subject to internal pressure of oil fired and exhaust fired thermal oil heaters
< 63,5	2,4
70 - 89	2,9
> 89	3,6

3 Design and construction - Equipment

3.1 All pressure vessels

3.1.1 Drainage

a) Each air pressure vessel is to be fitted with a drainage device allowing the evacuation of any oil or water accumulated in the vessel.

b) Drainage devices are also to be fitted on other vessels, in particular steam vessels, in which condensation water is likely to accumulate.

3.2 Boilers and steam generators

3.2.1 Safety valve arrangement

a) Every steam boiler and every steam generator with a total heating surface of 50 m² and above is to be provided with not less than two spring loaded safety valves of adequate capacity. For steam boilers and steam generators having heating surface less than 50 m², only one safety valve need be fitted.

b) Where a superheater is an integral part of the boiler, at least one safety valve is to be located on the steam drum and at least one at the superheater outlet. The valves fitted at the superheater outlet may be considered as part of the boiler safety valves required in item a), provided that their capacity does not account for more than 25% of the total capacity required in [3.2.2], unless specially considered by the Society.

c) Where fitted, superheaters which may be shut-off from the boiler are to be provided with at least one safety valve; such valve(s) cannot be considered as part of the boiler safety valves required in item a).

d) In the case of boilers fitted with a separate steam accumulator, safety valves may be fitted on the accumulator if no shut-off is provided between it and the boiler and if the connecting pipe is of a size sufficient to allow the whole steam production to pass through, without increasing the boiler pressure more than 10% above the design pressure.

3.2.2 Relieving capacity of safety valves

a) The relieving capacity of each safety valve Q, in kg/h, is to be determined by the appropriate formula below in order that:

$Q \geq W$

- saturated steam:

$$Q = \frac{CA(10P + 1,05)}{100}$$

- superheated steam:

$$Q = \frac{CA(10P + 1,05)}{100}\sqrt{\frac{v}{v_s}}$$

where:

W : Maximum steam production, in kg/h, as defined by the maximum power of the heating equipment; otherwise the value of W is to be based on evaporating capacities (referring to evaporating surfaces of the boiler concerned) less than the following:

- 14 kg/(m²·h) for exhaust gas heated boilers
- 29 kg/(m²·h) for oil fired boilers
- 60 kg/(m²·h) for water walls of oil fired boilers

A : Aggregate area, in mm², of the orifices in way of the seat of the valve, deducting the obstructions corresponding to the guides and the conformation of the valve in full lift position

p : Maximum working pressure of the boiler or other steam generator, in MPa. For superheated steam safety valves, P is to be the pressure at the superheater outlet

C : Coefficient with the following values:

- 4,8 for ordinary safety valves, i.e. where the valve lift is at least 1/24 of the internal diameter of the seat
- 10 for high lift safety valves, i.e. where the valve lift is at least 1/12 of the internal diameter of the seat
- 20 for full lift safety valves, i.e. where the valve lift is at least 1/4 of the internal diameter of the valve

Higher values of coefficient C may be admitted for safety valves of approved type and having undergone, in the presence of the Surveyor or according to a procedure considered as equivalent by the Society, capacity tests with conditions of pressure and temperature comparable to those of the plant considered. In such a case, coefficient C is to be, as a rule, taken as 90% of the resulting value from the capacity test.

v : Specific volume of saturated steam at the pressure corresponding to the superheater outlet

v_S : Specific volume of superheated steam at the temperature corresponding to the superheater outlet.

b) When the safety valves are fitted at the superheater outlet. Their relieving capacity is to be such that, during the discharge of safety valves, a sufficient quantity of steam is circulated through the superheater to avoid damage.

c) The orifice diameter in way of the safety valves seat is not to be less than 40 mm. Where only one safety valve need be fitted, the orifice minimum diameter is not to be less than 50 mm. Valves of large relieving capacity with 15 mm minimum diameter may be accepted for boilers with steam production not exceeding 2000 kg/h.

d) Independently of the above requirements, the aggregate capacity of the safety valves is to be such as to discharge all the steam that can be generated without causing a transient pressure rise of more than 10% over the design pressure.

3.2.3 Miscellaneous safety valve requirements

a) Safety valves operated by pilot valves

The arrangement on the superheater of large relieving capacity safety valves, operated by pilot valves fitted in the saturated steam drum, is to be specially considered by the Society.

b) Safety valve setting

- Safety valves are to be set under steam in the presence of the Surveyor to a pressure not higher than 1,03 times the design pressure.
- Safety valves are to be so constructed that their setting may not be increased in service and their spring may not be expelled in the event of failure. In addition, safety valves are to be provided with simple means of lifting the plug from its seat from a safe position in the boiler or engine room.
- Where safety valves are provided with means for regulating their relieving capacity, they are to be so fitted that their setting cannot be modified when the valves are removed for surveys.

c) Safety valve fitting on boiler

- The safety valves of a boiler are to be directly connected to the boiler and separated from other valve bodies.
- Where it is not possible to fit the safety valves directly on the superheater headers, they are to be mounted on a strong nozzle fitted as close as practicable to the superheater outlet. The cross-sectional area for passage of steam through restricted orifices of the nozzles is not to be less than 1/2 the aggregate area of the valves, calculated with the formulae of [2.3.2] when $C \leq 10$, and not less than the aggregate area of the valves when $C > 10$.
- Safety valve bodies are to be fitted with drain pipes of a diameter not less than 20 mm for double valves, and not less than 12 mm for single valves, leading to the bilge or to the hot well. Valves or cocks are not to be fitted on drain pipes.

d) Exhaust pipes

- the minimum cross-sectional area of the exhaust pipes of safety valves which have not been experimentally tested is not to be less than C times the aggregate area A
- the cross-sectional area of the exhaust manifold of safety valves is to be not less than the sum of the areas of the individual exhaust pipes connected to it
- silencers fitted on exhaust manifolds are to have a free passage area not less than that of the manifolds
- the strength of exhaust manifolds and pipes and associated silencers is to be such that they can withstand the maximum pressure to which they may be subjected, which is to be assumed not less than 1/4 of the safety valve setting pressure
- in the case that the discharges from two or more valves are led to the same exhaust manifold, provision is to be made to avoid the back pressure from the valve which is discharging influencing the other valves
- exhaust manifolds are to be led to the open and are to be adequately supported and fitted with suitable expansion joints or other means so that their weight does not place an unacceptable load on the safety valve bodies.

e) Steam generator heated by steam

Steam heated steam generators are also to be protected against possible damage resulting from failure of the heating coils. In this case, the area of safety valves calculated as stated in [3.2.2] may need to be increased to the satisfaction of the Society, unless suitable devices limiting the flow of steam in the heating coils are provided.

3.2.4 Other requirements

Access arrangement

a) Boilers are to be provided with openings in sufficient number and size to permit internal examination, cleaning and maintenance operations. In general, all pressure vessels which are part of a boiler with inside diameter exceeding 1200 mm, and those with inside diameter exceeding 800 mm and length exceeding 2000 mm, are to be provided with access manholes.

b) Manholes are to be provided in suitable locations in the shells, headers, domes, and steam and water drums, as applicable. The “net” (actual hole) dimension of elliptical or similar manholes is to be not less than 300mm x 400mm. The “net” diameter of circular manholes (actual hole) cannot be less than 400 mm. The edges of manholes are to be adequately strengthened to provide compensation for vessel openings in accordance with [2.8.4], [2.8.6] and [2.8.9], as applicable.

c) In pressure vessels which are part of a boiler and are not covered by the requirement in item a) above, or where an access manhole cannot be fitted, at least the following openings are to be provided, as far as practicable:

- head holes: minimum dimensions:

  220mm x 320mm (320 mm diameter if circular)
- handholes: minimum dimensions:

  87mm x 103mm
- sight holes: minimum diameter:

  50 mm.

d) Sight holes may only be provided when the arrangement of manholes, head holes, or handholes is impracticable.

e) Covers for manholes and other openings are to be made of ductile steel, dished or welded steel plates or other approved design. Grey cast iron may be used only for small openings, such as handholes and sight holes, provided the design pressure p does not exceed 1 MPa and the design temperature T does not exceed 220°C.

f) Covers are to be of self-closing internal type. Small opening covers of other type may be accepted by the Society on a case by case basis.

g) Covers of the internal type are to have a spigot passing through the opening. The clearance between the spigot and the edge of the opening is to be uniform for the whole periphery of the opening and is not to exceed 1,5 mm.

h) Closing devices of internal type covers, having dimensions not exceeding 180mm x 230mm, may be fitted with a single fastening bolt or stud. Larger closing devices are to be fitted with at least two bolts or studs.

i) Covers are to be designed so as to prevent the dislocation of the required gasket by the internal pressure. Only continuous ring gaskets may be used for packing.

Fittings

a) In general, cocks and valves are to be designed in accordance with the requirements in Ch 1, Sec 7, [2.8.2].

b) Cocks, valves and other fittings are to be connected directly or as close as possible to the boiler shell.

c) Cocks and valves for boilers are to be arranged in such a way that it can be easily seen when they are open or closed and so that their closing is obtained by a clockwise rotation of the actuating mechanism.

Boiler burners

Burners are to be arranged so that they cannot be withdrawn unless the fuel supply to the burners is cut off.

Allowable water levels

a) In general, for water tube boilers the lowest permissible water level is just above the top row of tubes when the water is cold. Where the boiler is designed not to have fully submerged tubes, when the water is cold, the lowest allowable level indicated by the manufacturer is to be indicated on the drawings and submitted to the Society for consideration.

b) For fire tube boilers with combustion chamber integral with the boiler, the minimum allowable level is to be at least 50 mm above the highest part of the combustion chamber.

c) For vertical fire tube boilers the minimum allowable level is 1/2 of the length of the tubes above the lower tube sheet.

Steam outlets

a) Each boiler steam outlet, if not serving safety valves, integral superheaters and other appliances which are to have permanent steam supply during boiler operation, is to be fitted with an isolating valve secured either directly to the boiler shell or to a standpipe of substantial thickness, as short as possible, and secured directly to the boiler shell.

b) The number of auxiliary steam outlets is to be reduced to a minimum for each boiler.

c) Where several boilers supply steam to common mains, the arrangement of valves is to be such that it is possible to positively isolate each boiler for inspection and maintenance. In addition, for water tube boilers, non-return devices are to be fitted on the steam outlets of each boiler.

d) Where steam is used for essential auxiliaries (such as whistles, steam operated steering gears, steam operated electric generators, etc.) and when several boilers are fitted on board, it is to be possible to supply steam to these auxiliaries with any one of these boilers out of operation.

e) Each steam stop valve exceeding 150 mm nominal diameter is to be fitted with a bypass valve.

Feed check valves

a) Each fired boiler supplying steam to essential services is to be fitted with at least two feed check valves connected to two separate feed lines. For unfired steam generators a single feed check valve may be allowed.

b) Feed check valves are to be secured directly to the boiler or to an integral economiser. Water inlets are to be separated. Where, however, feed check valves are secured to an economiser, a single water inlet may be allowed provided that each feed line can be isolated without stopping the supply of feed water to the boiler.

c) Where the economisers may be bypassed and cut off from the boiler, they are to be fitted with pressure-limiting type valves, unless the arrangement is such that excessive pressure cannot occur in the economiser when cut off.

d) Feed check valves are to be fitted with control devices operable from the stokehold floor or from another appropriate location. In addition, for water tube boilers, at least one of the feed check valves is to be arranged so as to permit automatic control of the water level in the boiler.

e) Provision is to be made to prevent the feed water from getting in direct contact with the heated surfaces inside the boiler and to reduce, as far as possible and necessary, the thermal stresses in the walls.

Drains

Each superheater, whether or not integral with the boiler, is to be fitted with cocks or valves so arranged that it is possible to drain it completely.

Water sample

a) Every boiler is to be provided with means to supervise and control the quality of the feed water. Suitable arrangements are to be provided to preclude, as far as practicable, the entry of oil or other contaminants which may adversely affect the boiler.

b) For this purpose, boilers are to be fitted with at least one water sample cock or valve. This device is not to be connected to the water level standpipes.

c) Suitable inlets for water additives are to be provided in each boiler.

Marking of boilers

a) Each boiler is to be fitted with a permanently attached plate made of non-corrosive metal, with indication of the following information, in addition to the identification marks (name of manufacturer, year and serial number):
   - the design pressure
   - the design temperature
   - the test pressure and the date of the test.

b) Markings may be directly stamped on the vessel if this does not produce notches having an adverse influence on its behaviour in service.

c) For lagged vessels, these markings are also to appear on a similar plate fitted above the lagging.

3.3 Thermal oil heaters and thermal oil installation

3.3.1 General

a) The following requirements apply to thermal oil heaters in which organic liquids (thermal oils) are heated by oil fired burners, exhaust gases or electricity to temperatures below their initial boiling point at atmospheric pressure.

b) Thermal oils are only to be used within the limits set by the manufacturer.

c) Means are to be provided for manual operation. However, at least the temperature control device on the oil side and flow monitoring are to remain operative even in manual operation.

d) Means are to be provided for manual operation. During manual operation the automated functioning of at least the temperature control device on the thermal oil side as well as the flow monitoring is to be maintained.

3.3.2 Thermal oil heater design

a) Heaters are to be so constructed that neither the surfaces nor the thermal oil becomes excessively heated at any point. The flow of the thermal oil is to be ensured by forced circulation.

b) The surfaces which come into contact with the thermal oil are to be designed for the design pressure, subject to the minimum pressure of 1 MPa.

c) Copper and copper alloys are not permitted.

d) Heaters heated by exhaust gas are to be provided with inspection openings at the exhaust gas intake and outlet.

e) Oil fired heaters are to be provided with inspection openings for examination of the combustion chamber. The opening for the burner may be considered as an inspection opening, provided its size is sufficient for this purpose.

f) Heaters are to be fitted with means enabling them to be completely drained.

g) Thermal oil heaters heated by exhaust gas are to be fitted with a permanent system for extinguishing and cooling in the event of fire, for instance a pressure water spraying system.

3.3.3 Safety valves of thermal oil heaters

Each heater is to be equipped with at least one safety valve having a discharge capacity at least equal to the increase in volume of the thermal oil at the maximum heating power. During discharge the pressure may not increase above 10% over the design pressure.

3.3.4 Pressure vessels of thermal oil heaters

The design pressure of all vessels which are part of a thermal oil system, including those open to the atmosphere, is to be taken not less than 0,2 MPa.

3.3.5 Equipment of the expansion, storage and drain tanks

For the equipment to be installed on expansion, storage and drain tanks, see Ch 1, Sec 7, [13].

3.3.6 Marking

Each thermal oil heater and other pressure vessels which are part of a thermal oil installation are to be fitted with a permanently attached plate made of non-corrosive metal, with indication of the following information, in addition to the identification marks (name of manufacturer, year and serial number):

- Heaters
  - maximum allowable heating power
  - design pressure
  - maximum allowable discharge temperature
  - minimum flow rate
  - liquid capacity
- Vessels
  - design pressure
  - design temperature
  - capacity.

3.4 Special types of pressure vessels

3.4.1 Seamless pressure vessels (bottles)

Each bottle is to be marked with the following information:

- name or trade name of the manufacturer
- serial number
- type of gas
- capacity
- test pressure
- empty weight
- test stamp.

3.4.2 Steam condensers

a) The water chambers and steam spaces are to be fitted with doors for inspection and cleaning.

b) Where necessary, suitable diaphragms are to be fitted for supporting tubes.

c) Condenser tubes are to be removable.

d) High speed steam flow, where present, is to be prevented from directly striking the tubes by means of suitable baffles.

e) Suitable precautions are to be taken in order to avoid corrosion on the circulating water side and to provide an efficient grounding.

3.5 Other pressure vessels

3.5.1 Safety valves arrangement

a) General
   - Pressure vessels which are part of a system are to be provided with safety valves, or equivalent devices, if they are liable to be isolated from the system safety devices. This provision is also to be made in all cases in which the vessel pressure can rise, for any reason, above the design pressure.
   - In particular, air pressure vessels which can be isolated from the safety valves ensuring their protection in normal service are to be fitted with another safety device, such as a rupture disc or a fusible plug, in order to ensure their discharge in case of fire. This device is to discharge to the open.
   - Safety devices ensuring protection of pressure vessels in normal service are to be rated to operate before the pressure exceeds the maximum working pressure by more than 5%
   - where two or more pressure vessels are interconnected by a piping system of adequate size so that no branch of piping may be shut off, it is sufficient to provide them with one safety valve and one pressure gauge only.

b) Heat exchangers

   Special attention is to be paid to the protection against overpressure of vessels, such as heat exchangers, which have parts that are designed for a pressure which is below that to which they might be subjected in the case of rupture of the tubular bundles or coils contained therein and that have been designed for a higher pressure.

3.5.2 Other requirements

a) Access arrangement

   The access requirements for boilers stated in [3.2.4] are also applicable for other pressure vessels.

b) Corrosion protection

Vessels and equipment containing media that might lead to accelerated corrosion are to be suitably protected.

c) Marking

- Each pressure vessel is to be fitted with a permanently attached plate made of non-corrosive metal, with indication of the following information, in addition to the identification marks (name of manufacturer, year and serial number):
  - the design pressure
  - the design temperature
  - the test pressure and the date of the test.
- Markings may be directly stamped on the vessel if this does not produce notches having an adverse influence on its behaviour in service.
- For smaller pressure vessels the indication of the design pressure only may be sufficient.

4 Design and construction - Fabrication and welding

4.1 General

4.1.1 Base materials

a) These requirements apply to boilers and pressure vessels made of steel of weldable quality.

b) Fabrication and welding of vessels made of other materials are to be the subject of special consideration.

4.1.2 Welding

a) Weldings are to be performed in accordance with welding procedures approved by the Society.

b) Manual and semi-automatic welding is to be performed by welders qualified by the Society.

c) The conditions under which the welding procedures, welding equipment and welders operate are to correspond to those specified in the relevant approvals or qualifications.

d) Both ordinary and special electric arc welding processes are covered in the following requirements.

4.1.3 Cutting of plates

a) Plates are to be cut by flame cutting, mechanical machining or a combination of both processes. For plates having a thickness less than 25 mm, cold shearing is admitted provided that the sheared edge is removed by machining or grinding for a distance of at least one quarter of the plate thickness with a minimum of 3 mm.

b) For flame cutting of alloy steel plates, preheating is to be carried out if necessary.

c) The edges of cut plates are to be examined for laminations, cracks or any other defect detrimental to their use.

4.1.4 Forming of plates

a) The forming processes are to be such as not to impair the quality of the material. The Society reserves the right to require the execution of tests to demonstrate the suitability of the processes adopted. Forming by hammering is not allowed.

b) Unless otherwise justified, cold formed shells are to undergo an appropriate heat treatment if the ratio of internal diameter after forming to plate thickness is less than 20. This heat treatment may be carried out after welding.

c) Before or after welding, hot formed plates are to be normalised or subjected to another treatment suitable for their steel grade, if hot forming has not been carried out within an adequate temperature range.

d) Plates which have been previously butt-welded may be formed under the following conditions:

- Hot forming

  After forming, the welded joints are to be subjected to X-ray examination or equivalent. In addition, mechanical tests of a sample weld subjected to the same heat treatment are to be carried out.
- Cold forming

  Cold forming is only allowed for plates having a thickness not exceeding:
  - 20 mm for steels having minimum ultimate tensile strength R_m between 360 N/mm^2 and 410 N/mm^2
  - 15 mm for steels having R_m between 460 N/mm^2 and 510 N/mm^2 as well as for steels 0,3Mo, 1Mn0,5Mo, 1Mn0,5MoV and 0,5Cr0,5Mo.

  Cold forming is not allowed for steels 1Cr0,5Mo and 2,25Cr1Mo.
- Weld reinforcements are to be carefully ground smooth prior to forming.
- A proper heat treatment is to be carried out after forming, if the ratio of internal diameter to thickness is less than 36, for steels: 460 N/mm^2, 510 N/mm^2, 0,3Mo, 1Mn0,5Mo, 1Mn0,5MoV and 0,5Cr0,5Mo.
- After forming, the joints are to be subjected to X-ray examination or equivalent and to a magnetic particle or liquid penetrant test.
- Refer to Fig 26 for definition of thickness to be taken in account.

4.2 Welding design

4.2.1 Main welded joints

a) All joints of class 1 and 2 pressure parts of boilers and pressure vessels are to be butt-welded, with the exception of welding connecting flat heads or tube sheets to shells, for which partial penetration welds or fillet welds may be accepted.

Fig 26 show examples of acceptable welding for class 1 and 2 pressure vessels.

Figure 26 : Example of acceptable joints and thickness to be considered for forming and post-weld heat treatment

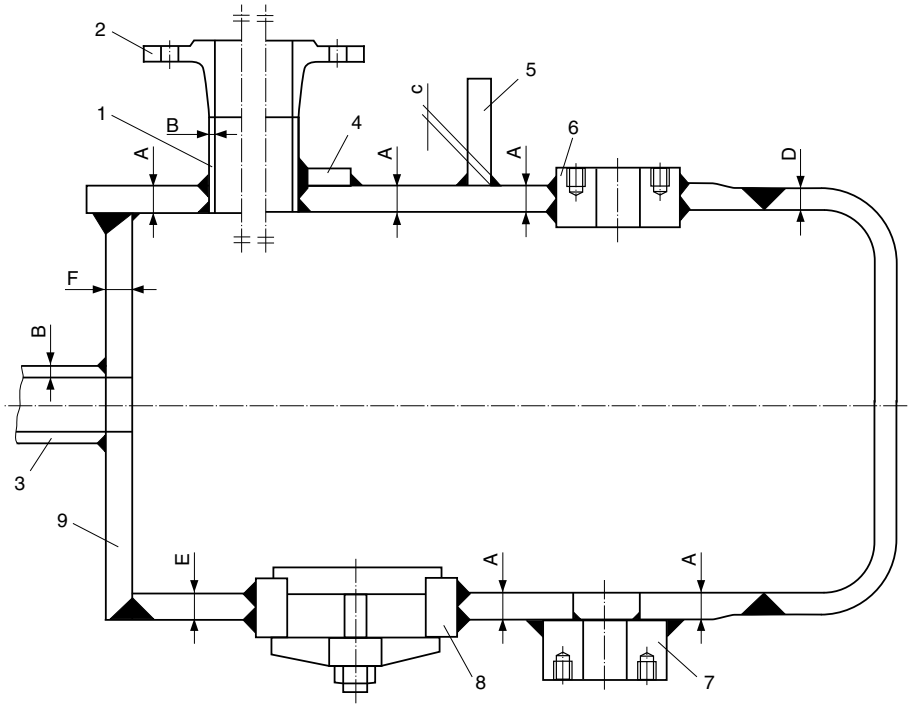

Key

1: Nozzle (set in); **2**: Flange; **3**: Nozzle (set on); **4**: Reinforcing plate; **5**: Non-pressure part;

6: Pad (set in); **7**: Pad (set on); **8**: Manhole frame; **9**: Flat plate.

b) Joints of class 3 pressure vessels are also subject to the requirement in a), however connection of dished heads to shells by lap welds may be accepted. Fig 27 shows some acceptable details of circumferential lap welds for class 3 pressure vessels.

Figure 27 : Example of acceptable lap-joints

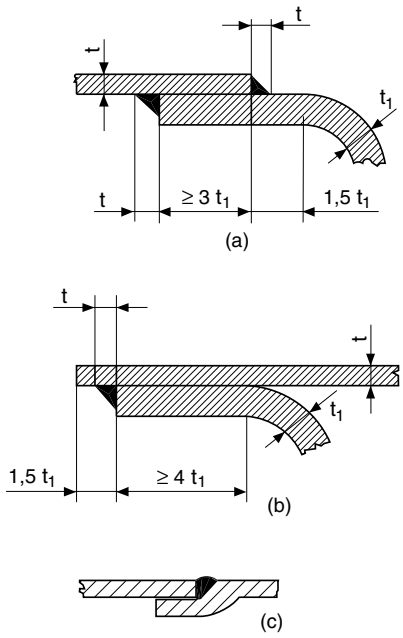

Details (b) and (c) may be used only for pressure vessels having internal diameter less than 600mm.

4.2.2 Shell longitudinal and circumferential welds

Longitudinal and circumferential joints are to be welded from both sides of the plate. Welding from one side may be allowed only when there is evidence that the welding process permits a complete penetration and a sound weld root. If a backing strip is used, it is to be removed after welding and prior to any non-destructive examination. However, the backing strip may be retained in circumferential joints of class 2 vessels, having a thickness not exceeding 15 mm, and of class 3 vessels, provided that the material of the backing strip is such as not to adversely affect the weld.

4.2.3 Plates of unequal thickness

a) If plates of unequal thickness are butt-welded and the difference between thicknesses is more than 3 mm, the thicker plate is to be smoothly tapered for a length equal to at least four times the offset, including the width of the weld. For longitudinal joints the tapering is to be made symmetrically on both sides of the plate in order to obtain alignment of middle lines.

b) If the joint is to undergo radiographic examination, the thickness of the thicker plate is to be reduced to that of the thinner plate next to the joint and for a length of at least 30 mm.

4.2.4 Dished heads

a) For connection of a hemispherical end with a cylindrical shell, the joint is to be arranged in a plane parallel to that of the largest circle perpendicular to the axis of the shell and at such a distance from this plane that the tapering of the shell made as indicated in [2.5.6] is wholly in the hemisphere.

b) For torispherical ends made of parts assembled by welding, no welded joint is normally admitted along a parallel in the knuckle nor at a distance less than 50 mm from the beginning of the knuckle.

4.2.5 Welding location

The location of main welded joints is to be chosen so that these joints are not submitted to appreciable bending stresses.

4.2.6 Accessories and nozzles

a) Attachment of accessories by welds crossing main welds or located near such welds is to be avoided; where this is impracticable, welds for attachment of accessories are to completely cross the main welds rather than stop abruptly on or near them.

b) Openings crossing main joints or located near main joints are also to be avoided as far as possible.

c) Doubling plates for attachment of accessories such as fixing lugs or supports are to be of sufficient size to ensure an adequate distribution of loads on pressure parts; such doubling plates are to have well rounded corners. Attachment of accessories such as ladders and platforms directly on the walls of vessels such that they restrain their free contraction or expansion is to be avoided.

d) Welded connections of nozzles and other fittings, either with or without local compensation, are to be of a suitable type, size and preparation in accordance with the approved plans.

4.2.7 Connections of stays to tube plates

a) Where stays are welded, the cross-sectional area of the weld is to be at least 1,25 times the cross-section of the stay.

b) The cross-sectional area of the end welding of welded stay tubes is to be not less than 1,25 times the cross-sectional area of the stay tube.

4.2.8 Type of weldings

Fig 28 to Fig 37 indicate the type and size of weldings of typical pressure vessel connections. Any alternative type of welding or size is to be the subject of special consideration by the Society.

4.3 Miscellaneous requirements for fabrication and welding

4.3.1 Welding position

a) As far as possible, welding is to be carried out in the downhand horizontal position and arrangements are to be foreseen so that this can be applied in the case of circumferential joints.

b) When welding cannot be performed in this position, tests for qualification of the welding process and the welders are to take account thereof.

4.3.2 Cleaning of parts to be welded

a) Parts to be welded are, for a distance of at least 25 mm from the welding edges, to be carefully cleaned in order to remove any foreign matter such as rust, scale, oil, grease and paint.

b) If the weld metal is to be deposited on a previously welded surface, all slag or oxide is to be removed to prevent inclusions.

Figure 28 : Types of joints for unstayed flat heads (1)

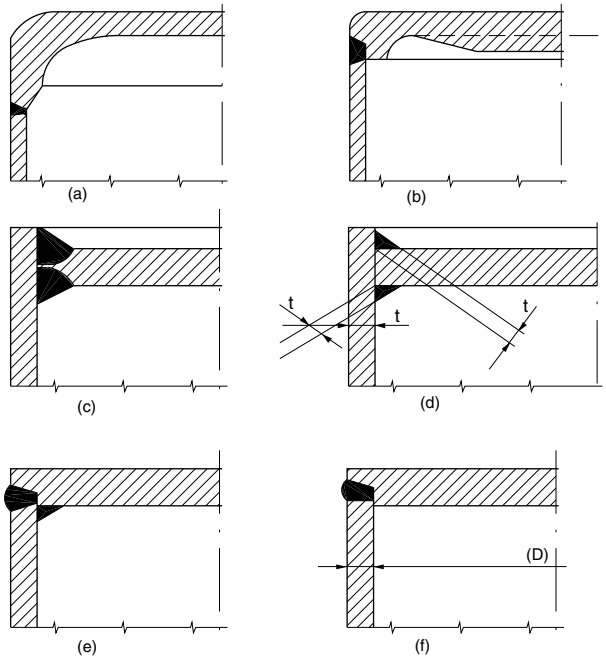

Figure 29 : Types of joints for unstayed flat heads (2)

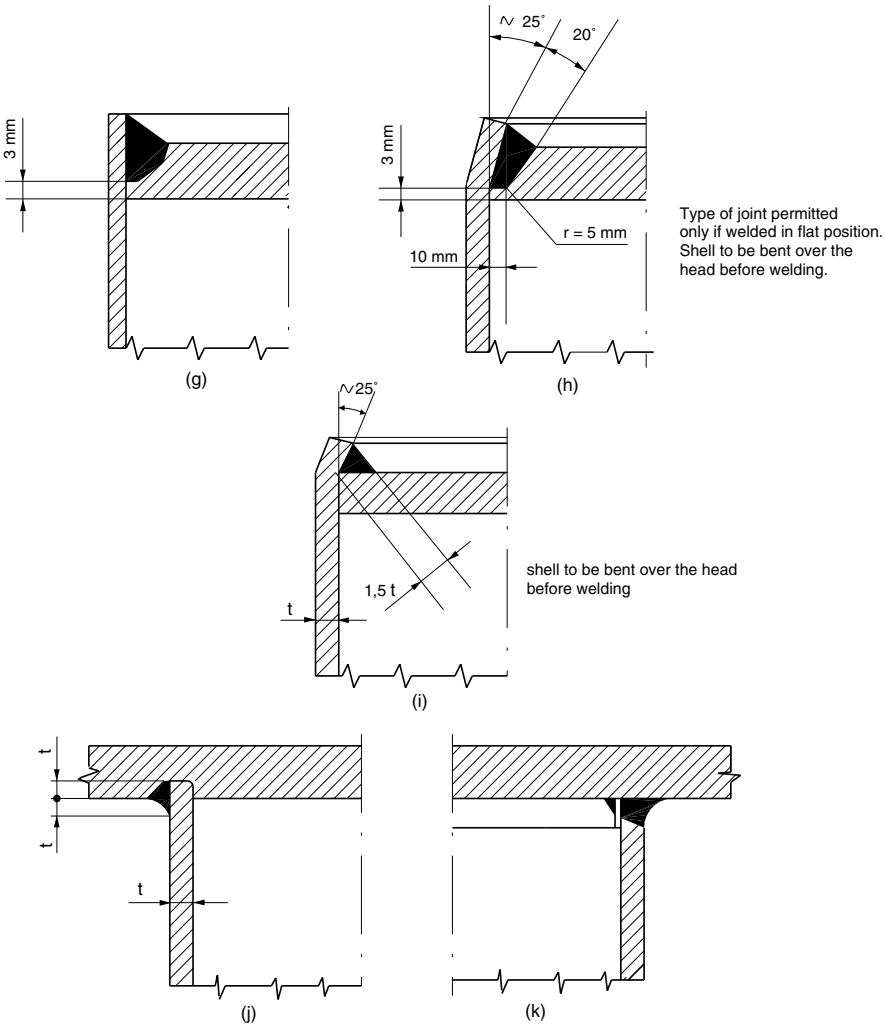

Figure 30 : Types of joints for nozzles and reinforced rings (1)

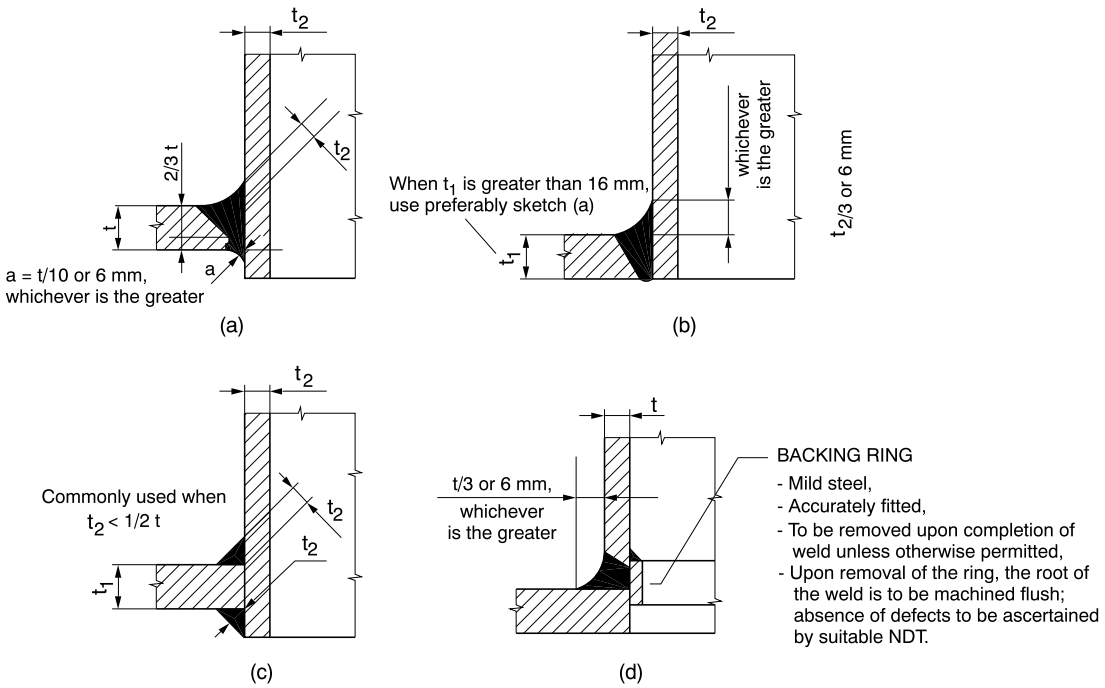

Figure 31 : Types of joints for nozzles and reinforcing rings (2)

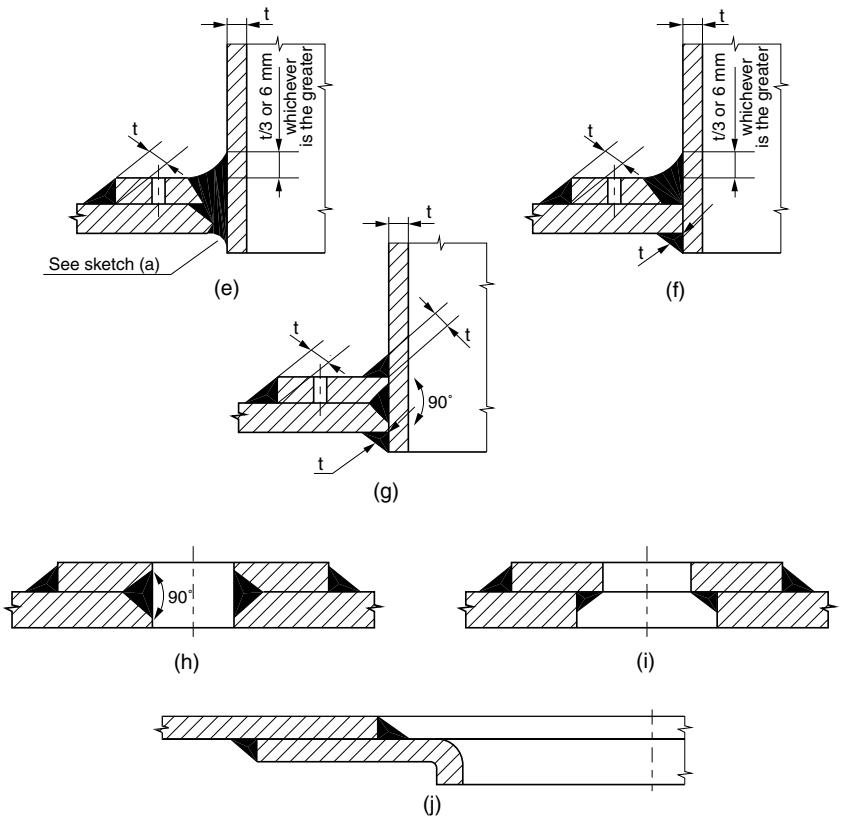

Figure 32 : Types of joints for nozzles and reinforcing rings (3)

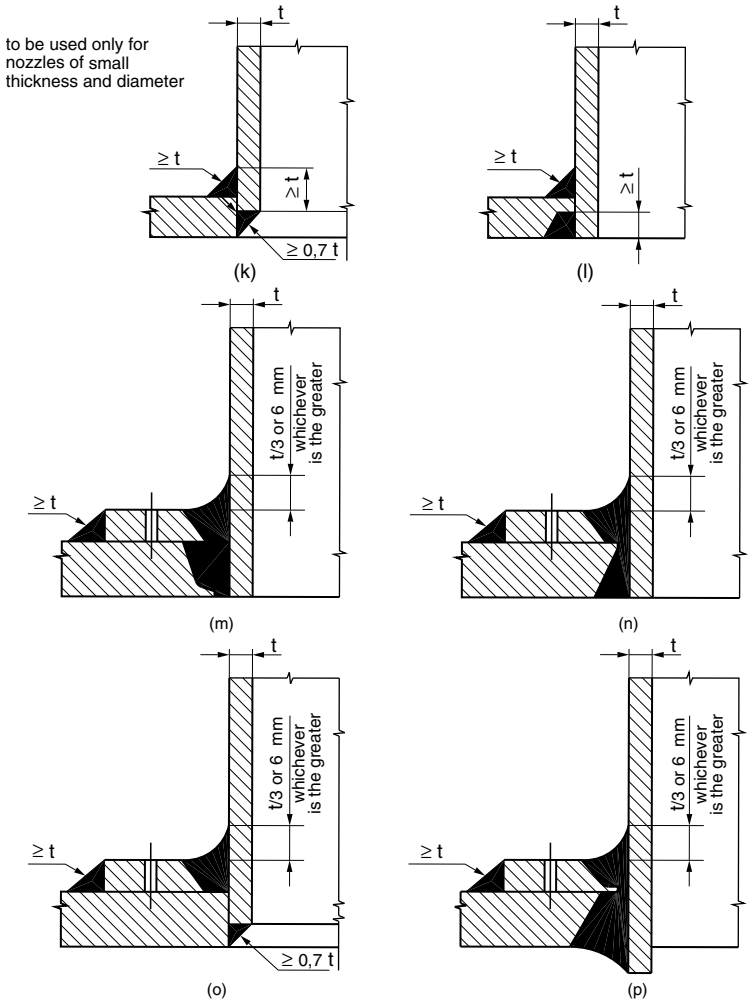

Figure 33 : Types of joints for nozzles (4)

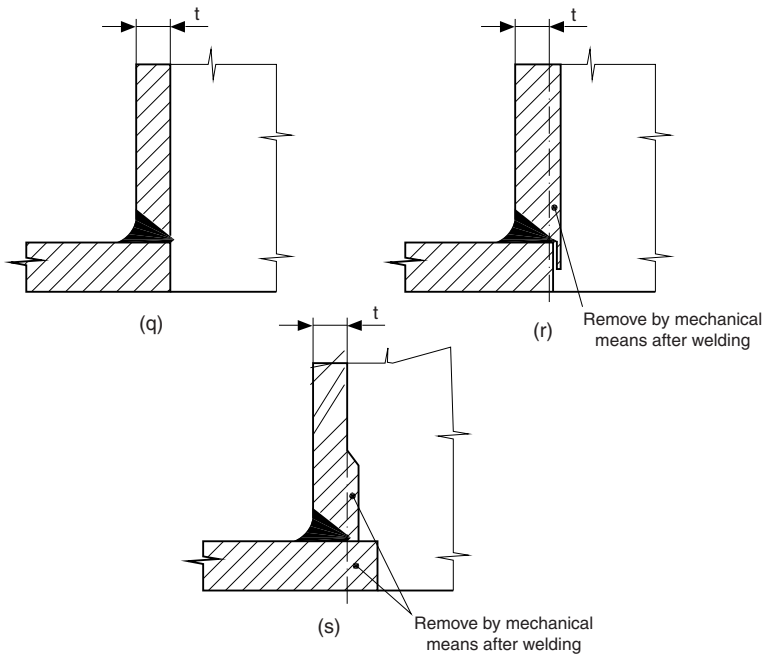

Note: Where preparations of Fig 33 are carried out, the shell is to be carefully inspected to ascertain the absence of lamination.

Figure 34 : Types of joints for flanges to nozzles

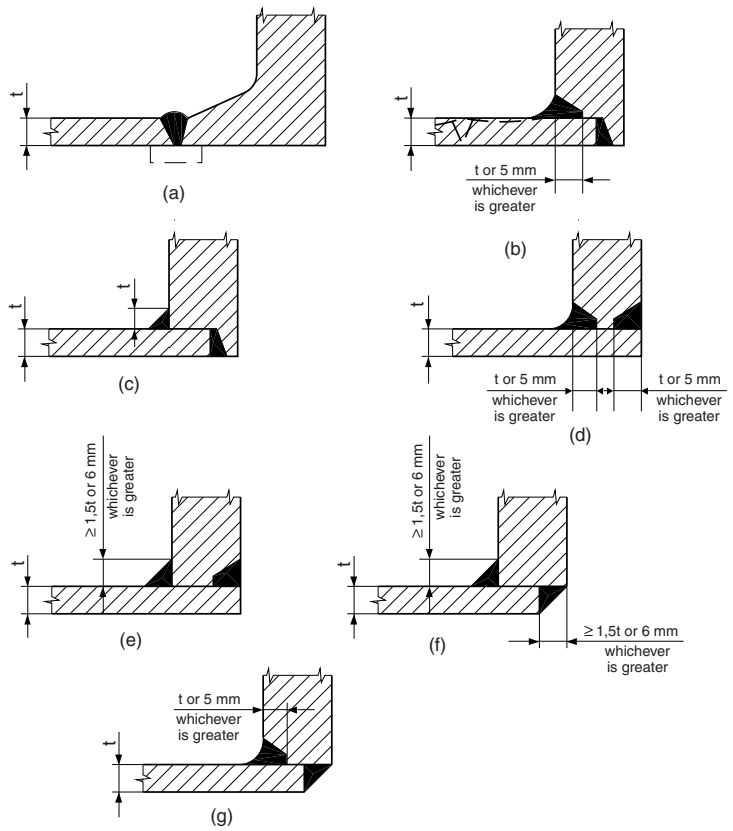

Figure 35 : Types of joints for tubesheets to shell (1)

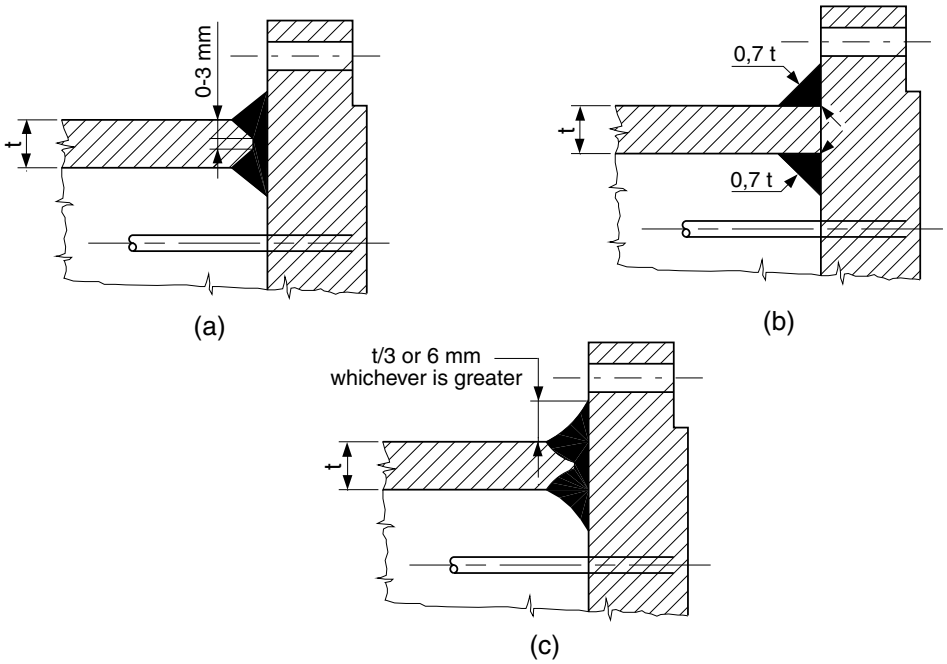

Figure 36 : Types of joints for tubesheets to shells (2)

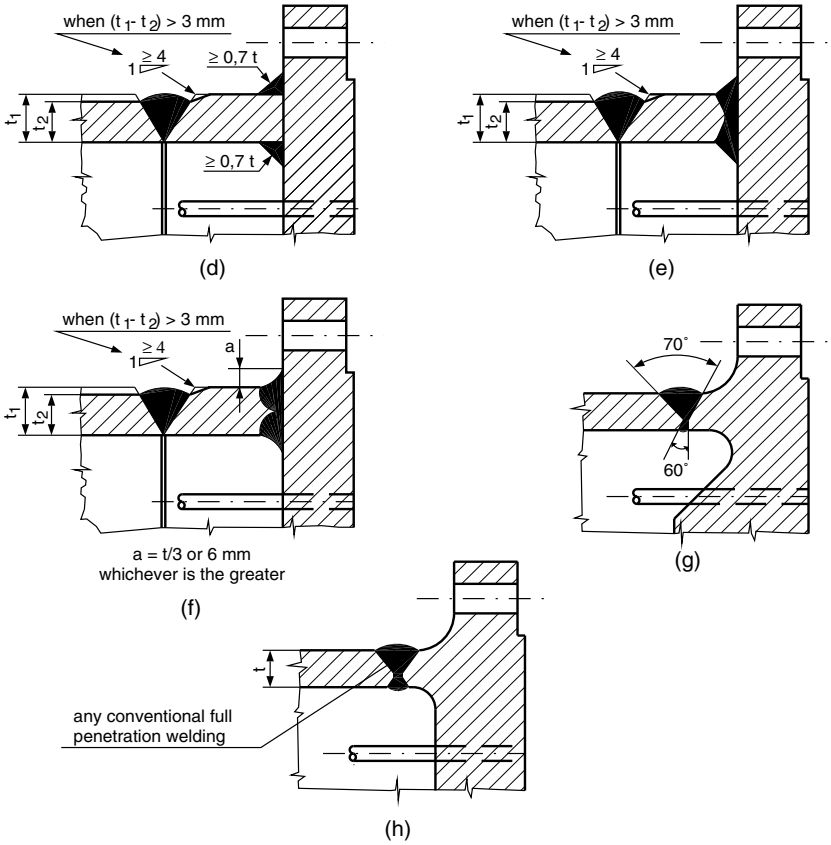

Preparation shown on sketches (d), (e) and (f) are to be used when the joint is accessible from outside only.

Figure 37 : Type of joints for stays and stay tubes

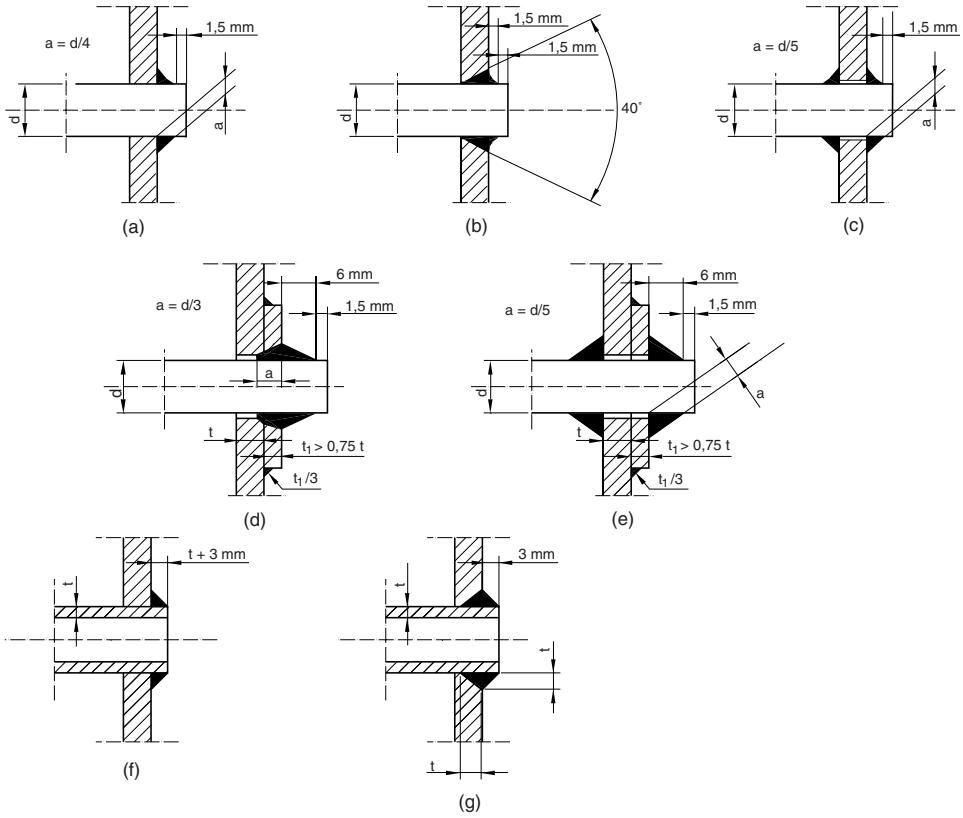

4.3.3 Protection against adverse weather conditions

a) Welding of pressure vessels is to be done in a sheltered position free from draughts and protected from cold and rain.

b) Unless special justification is provided, no welding is to be performed if the temperature of the base metal is less than 0°C.

4.3.4 Interruption in welding

If, for any reason, welding is stopped, care is to be taken on restarting to obtain a complete fusion.

4.3.5 Backing weld

When a backing weld is foreseen, it is to be carried out after suitable chiseling or chipping at the root of the first weld, unless the welding process applied does not call for such an operation.

4.3.6 Appearance of welded joints

a) Welded joints are to have a smooth surface without under-thickness; their connection with the plate surface is to be gradual without undercutting or similar defects.

b) The weld reinforcement of butt welds, on each side of the plate, is not to exceed the following thickness:
   - 2,5 mm for plates having a thickness not exceeding 12 mm
   - 3 mm for plates having a thickness greater than 12 mm but less than 25 mm
   - 5 mm for plates having a thickness at least equal to 25 mm.

4.4 Preparation of parts to be welded

4.4.1 Preparation of edges for welding

a) Grooves and other preparations of edges for welding are to be made by machining, chipping or grinding. Flame cutting may also be used provided that the zones damaged by this operation are removed by machining, chipping or grinding. For alloy steel plates, preheating is to be provided, if needed, for flame cutting.

b) Edges prepared are to be carefully examined to check that there are no defects detrimental to welding.

4.4.2 Abutting of parts to be welded

a) Abutting of parts to be welded is to be such that surface misalignment of plates does not exceed:
   - 10% of the thickness of the plate with a maximum of 3 mm for longitudinal joints
   - 10% of the thickness of the plate plus 1 mm with a maximum of 4 mm for circumferential joints.

b) For longitudinal joints, middle lines are to be in alignment within 10% of the thickness of the thinner plate with a maximum of 3 mm.

c) Plates to be welded are to be suitably retained in position in order to limit deformation during welding. The arrangements are to be such as to avoid modification of the relative position of parts to be welded and misalignment, after welding, exceeding the limits indicated above.

d) Temporary welds for abutting are to be carried out so that there is no risk of damage to vessel shells. Such welds are to be carefully removed after welding of the vessel and before any heat treatment. Non-destructive testing of the corresponding zones of the shell may be required by the Surveyor if considered necessary.

e) Accessories such as doubling plates, brackets and stiffeners are to be suitable for the surface to which they are to be attached.

4.5 Tolerances after construction

4.5.1 General

The sizes and shape of vessels are to be checked after welding for compliance with the design taking into account the tolerances given below. The Society reserves the right to stipulate smaller values for these tolerances for vessels subjected to special loads.

Any defect in shape is to be gradual and there is to be no flat area in way of welded joints.

Measurements are to be taken on the surface of the parent plate and not on the weld or other raised part.

4.5.2 Straightness

The straightness of cylindrical shells is to be such that their deviation from the straight line does not exceed 0,6% of their length, with a maximum of 15 mm for each 5 m of length.

4.5.3 Out-of-roundness

a) Out-of-roundness of cylindrical shells is to be measured either when set up on end or when laid flat on their sides; in the second case, measures of diameters are to be repeated after turning the shell through 90° about its axis and out-of-roundness is to be calculated from the average of the two measures of each diameter.

b) For any transverse section, the difference between the maximum and minimum diameters is not to exceed 1% of the nominal diameter D with a maximum of:

(D + 1250) / 200, D being expressed in mm.

For large pressure vessels, this limit may be increased by a maximum of 0,2% of the internal diameter of the vessel. Any possible out-of-roundness within the above limit is to be gradual and there are to be no localised deformations in way of the welded joints.

4.5.4 Irregularities

Irregularities in profile of cylindrical shells, checked by a 20° gauge, are not to exceed 5% of the thickness of the plate plus 3 mm. This value may be increased by 25% if the length of the irregularity does not exceed one quarter of the distance between two circumferential seams, with a maximum of 1 mm.

4.6 Preheating

4.6.1

a) Preheating, to be effectively maintained during the welding operation, may be required by the Society when deemed necessary in relation to a number of circumstances, such as the type of steel, thickness of the base material, welding procedure and technique, type of restraint, and heat treatment after welding, if any.

b) The preheating temperature is to be determined accordingly. However, a preheating temperature of approximately 150°C is required for 0,5Mo or 1Cr0,5Mo type steel, and approximately 250°C for 2,25Cr1Mo type steel.

c) These requirements also apply to welding of nozzles, fittings, steam pipes and other pipes subject to severe conditions.

4.7 Post-weld heat treatment

4.7.1 General

a) When post-weld heat treatment of a vessel is to be carried out, such treatment is to consist of:
- heating the vessel slowly and uniformly up to a temperature suitable for the grade of steel
- maintaining this temperature for a duration determined in relation to the actual thickness t_A of the vessel and the grade of steel
- slowly cooling the vessel in the furnace down to a temperature not exceeding 400°C, with subsequent cooling allowed out of the furnace in still air.

b) As far as possible, vessels are to be heat treated in a single operation. However, when the sizes of the vessels are such that heat treatment requires several operations, care is to be taken such that all the parts of the vessels undergo heat treatment in a satisfactory manner. In particular, a cylindrical vessel of great length may be treated in sections in a furnace if the overlap of the heated sections is at least 1500 mm and if parts outside the furnace are lagged to limit the temperature gradient to an acceptable value.

4.7.2 Thermal stress relieving

Upon completion of all welding, including connections of nozzles, doublers and fittings, pressure vessels of classes 1 and 2, boilers and associated parts are to be subjected to an effective stress relieving heat treatment in the following cases:

- Pressure vessels of classes 1 and 2 containing fluids at a temperature not less than the ambient temperature, where the thickness exceeds that indicated in Tab 17
- Boilers and steam generators for thicknesses higher than 20 mm or, depending upon the type of steel, for lower thicknesses as required for class 1 pressure vessels.

Applications at temperatures less than the ambient temperature and/or steels other than those indicated above are to be the subject of special consideration by the Society.

Stress relieving heat treatment is not to be required when the minimum temperature of the fluid is at least 30°C higher than the KV-notch impact test temperature specified for the steel; this difference in temperature is also to be complied with for welded joints (both in heat-affected zones and in weld metal).

Pressure vessels and pipes of class 3 and associated parts are not required to be stress relieved, except in specific cases.

4.7.3 Heat treatment procedure

The temperature of the furnace at the time of introduction of the vessel is not to exceed 400°C.

a) The heating rate above 400°C is not to exceed:
- 220°C per hour if the maximum thickness is not more than 25 mm, or
- $(5500 / t_A)$°C per hour, with a minimum of 55°C per hour, if the maximum thickness t_A, in mm, is more than 25 mm

b) The cooling rate in the furnace is not to exceed:
- –280°C per hour if the maximum thickness is not more than 25 mm, or
- $-(7000 / t_A)$°C per hour, with a minimum of –55°C per hour, if the maximum thickness t_A, in mm, is more than 25 mm.

Unless specially justified, heat treatment temperatures and duration for maintaining these temperatures are to comply with the values in Tab 18.

Table 17 : Thermal stress relieving

Grade	Thickness (mm) above which post-weld heat treatment is required	
	Boilers	Unfired pressure vessels
R_m = 360 N/mm² Grade HA R_m = 410 N/mm² Grade HA	14,5	14,5
R_m = 360 N/mm² Grade HB R_m = 410 N/mm² Grade HB	20	30
R_m = 360 N/mm² Grade HD R_m = 410 N/mm² Grade HD	20	38
R_m = 460 N/mm² Grade HB R_m = 510 N/mm² Grade HB	20	25
R_m = 460 N/mm² Grade HD R_m = 510 N/mm² Grade HD	20	35
0,3Mo 1Mn 0,5Mo 1Mn 0,5MoV 0,5Cr 0,5Mo	20	20
1Cr 0,5Mo 2,25Cr 1Mo	ALL	ALL

Table 18 : Heat treatment procedure

Grade	Temperatures	Time per 25 mm of maximum thickness	Minimum time
Carbon steels	580-620°C	1 hour	1 hour
0,3Mo 1Mn 0,5Mo 1Mn 0,5MoV 0,5Cr 0,5Mo	620-660°C	1 hour	1 hour
1Cr 0,5Mo	620-660°C	1hour	2 hours
2,25Cr 1Mo	600-750°C **(1)**	2 hours	2 hours
(1) The temperature is to be chosen, with a tolerance of ± 20°C, in this temperature range in order to obtain the required mechanical characteristics			

4.7.4 Alternatives

When, for special reasons, heat treatment is carried out in conditions other than those given in [4.7.2], all details regarding the proposed treatment are to be submitted to the Society, which reserves the right to require tests or further investigations in order to verify the efficiency of such treatment.

4.7.5 Execution of heat treatment

Furnaces for heat treatments are to be fitted with adequate means for controlling and recording temperature; temperatures are to be measured on the vessel itself. The atmosphere in the furnaces is to be controlled in order to avoid abnormal oxidation of the vessel.

4.7.6 Treatment of test plates

Test plates are normally to be heated at the same time and in the same furnace as the vessel.

When separate heat treatment of test plates cannot be avoided, all precautions are to be taken such that this treatment is carried out in the same way as for the vessel, specifically with regard to the heating rate, the maximum temperature, the duration for maintaining this temperature and the cooling conditions.

4.7.7 Welding after heat treatment

a) Normally, welding after heat treatment is only allowed if:
   - the throat of welding fillets does not exceed 10 mm
   - the largest dimension of openings in the vessel for the accessories concerned does not exceed 50 mm.

b) Any welding of branches, doubling plates and other accessories on boilers and pressure vessels after heat treatment is to be submitted for special examination by the Society.

4.8 Welding samples

4.8.1 Test plates for welded joints

a) Test plates of sufficient size, made of the same grade of steel as the shell plates, are to be fitted at each end of the longitudinal joints of each vessel so that the weld in the test plates is the continuation of these welded joints. There is to be no gap when passing from the deposited metal of the joint to the deposited metal of the test plate.

b) No test plate is required for circumferential joints if these joints are made with the same process as longitudinal joints. Where this is not the case, or if there are only circumferential joints, at least one test plate is to be welded separately using the same welding process as for the circumferential joints, at the same time and with the same welding materials.

c) Test plates are to be stiffened in order to reduce as far as possible warping during welding. The plates are to be straightened prior to their heat treatment which is to be carried out in the same conditions as for the corresponding vessel (see also [4.7.6]).

d) After radiographic examination, the following test pieces are to be taken from the test plates:

- one test piece for tensile test on welded joint
- two test pieces for bend test, one direct and one reverse
- three test pieces for impact test
- one test piece for macrographic examination.

4.8.2 Mechanical tests of test plates

a) The tensile strength on welded joint is not to be less than the minimum specified tensile strength of the plate.

b) The bend test pieces are to be bent through an angle of 180° over a former of 4 times the thickness of the test piece. There is to be no crack or defect on the outer surface of the test piece exceeding in length 1,5 mm transversely or 3 mm longitudinally. Premature failure at the edges of the test piece is not to lead to rejection. As an alternative, the test pieces may be bent through an angle of 120° over a former of 3 times the thickness of the test piece.

c) The impact energy measured at 0°C is not to be less than the values given in NR216 for the steel grade concerned.

d) The test piece for macrographic examination is to permit the examination of a complete transverse section of the weld. This examination is to demonstrate good penetration without lack of fusion, large inclusions and similar defects. In case of doubt, a micrographic examination of the doubtful zone may be required.

4.8.3 Re-tests

a) If one of the test pieces yields unsatisfactory results, two similar test pieces are to be taken from another test plate.

b) If the results for these new test pieces are satisfactory and if it is proved that the previous results were due to local or accidental defects, the results of the re-tests may be accepted.

4.9 Specific requirements for class 1 vessels

4.9.1 General

The following requirements apply to class 1 pressure vessels, as well as to pressure vessels of other classes, whose scantlings have been determined using an efficiency of welded joint e greater than 0,90.

4.9.2 Non-destructive tests

a) All longitudinal and circumferential joints of class 1 vessels are to be subject of 100% radiographic or equivalent examination with the following exceptions:

- for pressure vessels or parts designed to withstand external pressures only, at the Society's discretion, the extent may be reduced up to approximately 30% of the length of the joints. In general, the positions included in the examinations are to include all welding crossings.
- for vessels not intended to contain toxic or dangerous matters, made of carbon steels having thickness below 20 mm when the joints are welded by approved automatic processes at the Society's discretion, the extent may be reduced up to approximately 10% of the length of the joints. In general, the positions included in the examinations are to include all welding crossings.
- for circumferential joints having an external diameter not exceeding 175 mm, at the Society's discretion, the extent may be reduced up to approximately 10% of the total length of the joints.

b) Fillet welds for parts such as doubling plates, branches or stiffeners are to undergo a spot magnetic particle test for at least 10% of their length. If magnetic particle tests cannot be used, it is to be replaced by liquid penetrant test.

c) Welds for which non destructive tests reveal unacceptable defects, such as cracks or areas of incomplete fusion, are to be rewelded and are then to undergo a new non destructive examination.

4.9.3 Number of test samples

a) During production, at least one test plate for each 20 m of length (or fraction) of longitudinal weldings is to be tested as per [4.8.2].

b) During production, at least one test plate for each 30 m of length (or fraction) of circumferential welding is to be tested as per [4.8.2].

c) When several vessels made of plates of the same grade of steel, with thicknesses varying by not more than 5 mm, are welded successively, only one test plate may be accepted per each 20 m of length of longitudinal joints (or fraction) and per each 30 m of circumferential welding (or fraction) provided that the welders and the welding process are the same. The thickness of the test plates is to be the greatest thickness used for these vessels.

4.10 Specific requirements for class 2 vessels

4.10.1 General

For vessels whose scantlings have been determined using an efficiency of welded joint e greater than 0,90, see [4.9.1].

4.10.2 Non-destructive tests

All longitudinal and circumferential joints of class 2 vessels are to be subjected to radiographic or equivalent examination to an extent of 10% of each weld length. This examination is to cover all the junctions between welds.

This extension may be increased at the Society's discretion depending on the actual thickness of the welded plates.

For actual thickness ≤ 15 mm, this examination can be omitted. In this case, the value of the efficiency should be as indicated in Tab 10.

4.10.3 Number of test samples

In general, the same requirements of [4.9.3] apply also to class 2 pressure vessels. However, test plates are required for each 50 m of longitudinal and circumferential weldings (or fraction).

4.11 Specific requirements for class 3 vessels

4.11.1 For vessels whose scantlings have been determined using an efficiency of welded joint e greater than 0,90, see [4.9.1].

Heat treatment, mechanical tests and non-destructive tests are not required for welded joints of other class 3 vessels.

5 Design and construction - Control and monitoring

5.1 Boiler control and monitoring system

5.1.1 Local control and monitoring

Means to effectively operate, control and monitor the operation of oil fired boilers and their associated auxiliaries are to be provided locally. The functional condition of the fuel, feed water and steam systems and the boiler operational status are to be indicated by pressure gauges, temperature indicators, flow-meter, lights or other similar devices.

5.1.2 Emergency shut-off

Means are to be provided to shut down boiler forced draft or induced draft fans and fuel oil service pumps from outside the space where they are located, in the event that a fire in that space makes their local shut-off impossible.

5.1.3 Water level indicators

a) Each boiler is to be fitted with at least two separate means for indicating the water level. One of these means is to be a level indicator with transparent element. The other may be either an additional level indicator with transparent element or an equivalent device. Level indicators are to be of an approved type.

b) The transparent element of level indicators is to be made of glass, mica or other appropriate material.

c) Level indicators are to be located so that the water level is readily visible at all times. The lower part of the transparent element is not to be below the safety water level defined by the builder.

d) Level indicators are to be fitted either with normally closed isolating cocks, operable from a position free from any danger in case of rupture of the transparent element or with self-closing valves restricting the steam release in case of rupture of this element.

5.1.4 Water level indicators - Special requirements for water tube boilers

a) For water tube boilers having an athwarships steam drum more than 4 m in length, a level indicator is to be fitted at each end of the drum.

b) *Water tube boilers serving turbine propulsion machinery are to be fitted with a high-water-level audible and visual alarm* (see also Tab 20).

5.1.5 Water level indicators - Special requirements for fire tube boilers (vertical and cylindrical boilers)

a) For cylindrical boilers, the two water level indicators mentioned in [5.1.3] are to be distributed at each end of the boiler; i.e. double front cylindrical boilers are to have two level indicators on each front.

b) A system of at least two suitably located and remote controlled gauge-cocks may be considered as the equivalent device mentioned in [5.1.3] for cylindrical boilers having a design pressure lower than 1 MPa, for cylindrical boilers having a diameter lower than 2 m and for vertical boilers having height lower than 2,3 m. Gauge-cocks are to be fixed directly on the boiler shell.

c) Where level indicators are not fixed directly on the boiler shell, but on level pillars, the internal diameter of such pillars is not to be less than the value d_N given in Tab 19. Level pillars are to be either fixed directly on the boiler shell or connected to the boiler by pipes fitted with cocks secured directly to the boiler shell. The internal diameter of these pipes d_C is not to be less than the values given in Tab 19. The upper part of these pipes is to be arranged so that there is no bend where condense water can accumulate. These pipes are not to pass through smoke boxes or uptakes unless they are located inside metallic ducts having internal diameter exceeding by not less than 100 mm the external diameter of the pipes. Fig 38 shows the sketch of a level pillar arrangement.

Table 19 : Minimum internal diameters d_N and d_C

Internal diameter of the boiler	d_N (mm)	d_C (mm)
D > 3 m	60	38
2,30 m ≤ D ≤ 3 m	50	32
D < 2,30 m	45	26

Figure 38 : Level pillar arrangement

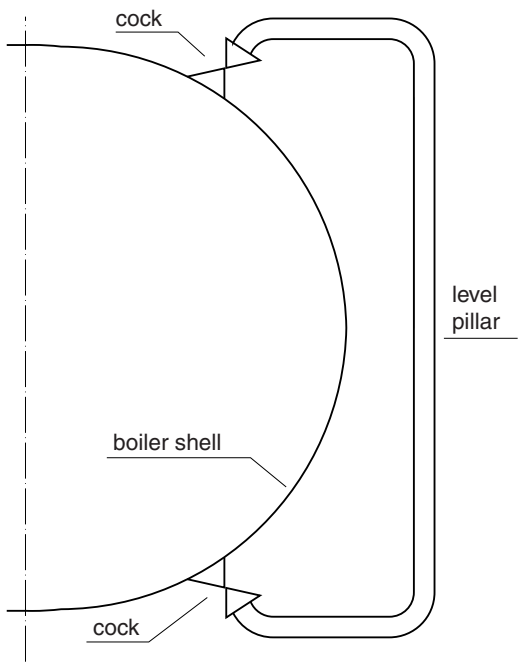

5.1.6 Pressure control devices

a) Each boiler is to be fitted with a steam pressure gauge so arranged that its indications are easily visible from the stokehold floor. A steam pressure gauge is also to be provided for superheaters which can be shut off from the boiler they serve.

b) Pressure gauges are to be graduated in units of effective pressure and are to include a prominent legible mark for the pressure that is not to be exceeded in normal service.

c) Each pressure gauge is to be fitted with an isolating cock.

d) Double front boilers are to have a steam pressure gauge arranged in each front.

5.1.7 Temperature control devices

Each boiler fitted with a superheater is to have an indicator or recorder for the steam temperature at the superheater outlet.

5.1.8 Automatic shut-off of oil fired propulsion and auxiliary boilers

a) Each burner is to be fitted with a flame scanner designed to automatically shut off the fuel supply to the burner in the event of flame failure. In the case of failure of the flame scanner, the fuel to the burner is to be shut off automatically.

b) A low water condition is to automatically shut off the fuel supply to the burners. The shut-off is to operate before the water level reaches a level so low as to affect the safety of the boiler and no longer be visible in the gauge glass. Means are to be provided to minimise the risk of shut-off provoked by the effect of roll and pitch and/or transients. This shut-off system need not be installed in auxiliary boilers which are under local supervision and are not intended for automatic operation.

c) Forced draft failure is to automatically shut off the fuel supply to the burners.

d) Loss of boiler control power is to automatically shut off the fuel supply to the burners.

5.1.9 Alarms

Any actuation of the fuel-oil shut-off listed in [5.1.8] is to operate a visual and audible alarm.

5.1.10 Additional requirements for boilers fitted with automatic control systems

a) The flame scanner required in [5.1.8], item a) is to operate within 6 seconds from the flame failure.

b) A timed boiler purge with all air registers open is to be initiated manually or automatically when boilers are fitted with an automatic ignition system. The purge time is based on a minimum of 4 air changes of the combustion chamber and furnace passes. Forced draft fans are to be operating and air registers and dampers are to be open before the purge time commences.

c) Means are to be provided to bypass the flame scanner control system temporarily during a trial-for-ignition for a period of 15 seconds from the time the fuel reaches the burners. Except for this trial-for-ignition period, no means are to be provided to bypass one or more of the burner flame scanner systems unless the boiler is locally controlled.

d) Where boilers are fitted with an automatic ignition system, and where residual fuel oil is used, means are to be provided for lighting of burners with igniters lighting properly heated residual fuel oil. In the case of flame failure, the burner is to be brought back into automatic service only in the low-firing position.

e) An alarm is to be activated whenever a burner operates outside the limit conditions stated by the manufacturer.

f) Immediately after normal shutdown, an automatic purge of the boiler equal to the volume and duration of the pre-purge is to occur. Following automatic fuel valve shut-off, the air flow to the boiler is not to automatically increase; post-purge in such cases is to be carried out under manual control.

g) Propulsion and auxiliary boilers associated with propulsion machinery intended for centralised, unattended operations are to comply with the requirements of Part C, Chapter 3.

5.2 Pressure vessel instrumentation

5.2.1

a) Pressure vessels are to be fitted with the necessary devices for checking pressure, temperature and level, where it is deemed necessary.

b) In particular, each air pressure vessel is to be fitted with a local manometer.

5.3 Thermal oil heater control and monitoring

5.3.1 Local control and monitoring

Suitable means to effectively operate, control and monitor the operation of oil fired thermal oil heaters and their associated auxiliaries are to be provided locally. The functional condition of the fuel, thermal oil circulation, forced draft and flue gas systems is to be indicated by pressure gauges, temperature indicators, flow-meter, lights or other similar devices.

5.3.2 Flow control and monitoring

a) A flow indicator of the thermal oil is to be provided.

b) The flow detection is to be representative of the flow in each heated element.

c) The flow detection is not to be based on a measurement of the pressure-drop through the heating element.

d) Oil fired or exhaust gas heaters are to be provided with a flow monitor limit-switch. If the flow rate falls below a minimum value the firing system is to be switched off and interlocked.

5.3.3 Manual control

During manual operation the automated functioning of at least the temperature control device on the thermal oil side as well as the flow monitoring is to be maintained.

5.3.4 Leakage monitoring

Oil tanks are to be equipped with a leakage detector which, when actuated, shuts down and interlocks the thermal oil firing system. If the oil fired heater is on stand-by, the starting of the burner is to be blocked if the leakage detector is actuated.

5.4 Control and monitoring requirements

5.4.1 Tab 20, Tab 21, Tab 22 and Tab 23 summarise the control and monitoring requirements for main propulsion boilers, auxiliary boilers, oil fired thermal oil heaters and exhaust gas thermal oil heaters and incinerators, respectively.

Table 20 : Main propulsion boilers

Symbol convention H = High, HH = High high, G = group alarm L = Low, LL = Low low, I = individual alarm X = function is required, R = remote	Monitoring		Automatic control				
			Boiler			Auxiliary	
Identification of system parameter	Alarm	Indication	Slow-down	Shut-down	Control	Stand by Start	Stop
Fuel oil							
• Fuel oil delivery pressure or flow	L						
• Fuel oil temperature after heater or viscosity fault	L+H	local					
• Master fuel oil valve position (open / close)		local					
• Fuel oil input burner valve position (open / close)		local					
Combustion							
• Flame failure of each burner	X						
• Failure of atomizing fluid	X					5	
• Boiler casing and economizer outlet smoke temperature (in order to detect possible fire out-break)	H						
	HH			X			
Air							
• Air register position		local					
General steam							
• Superheated steam pressure	L+H	local					
					X		
• Superheated steam temperature	H	local					
• Lifting of safety valve (or equivalent: high pressure alarm for instance)	X						
• Water level inside the drum of each boiler	L+H	local**(1)**					
	LL			X			
					X		
(1) Duplication of level indicator is required							

Table 21 : Auxiliary boilers

Symbol convention H = High, HH = High high, G = group alarm L = Low, LL = Low low, I = individual alarm X = function is required, R = remote	Monitoring		Automatic control				
			Boiler			Auxiliary	
Identification of system parameter	Alarm	Indication	Slow-down	Shut-down	Control	Stand by Start	Stop
Water level	L+H	local					
	LL			X			
Circulation stopped (when forced circulation boiler)	X			X			
Fuel oil temperature or viscosity **(2)**	L+H	local					
Flame failure	X			X			
Temperature in boiler casing (Fire)	H						
Steam pressure	H**(1)**	local		X			
(1) When the automatic control does not cover the entire load range from zero load **(2)** Where heavy fuel is used							

Table 22 : Thermal oil system

Symbol convention H = High, HH = High high, G = group alarm L = Low, LL = Low low, I = individual alarm X = function is required, R = remote	Monitoring		Automatic control				
			System			Auxiliary	
Identification of system parameter	Alarm	Indication	Slow-down	Shut-down	Control	Stand by Start	Stop
Thermal fluid temperature heater outlet	H	local		X(**1**)			
Thermal fluid pressure pump discharge	H	local		X			
Thermal fluid flow through heating element	L LL	local		X(**1**)			
Expansion tank level	L LL	local		X(**2**)			
Expansion tank temperature	H						
Forced draft fan stopped	X			X			
Heavy fuel oil temperature or viscosity	H+L	local					
Burner flame failure	X			X			
Flue gas temperature heater outlet	H HH			X(**2**)			
(1) Shut-off of heat input only **(2)** Stop of fluid flow and shut-off of heat input							

Table 23 : Incinerators

Symbol convention H = High, HH = High high, G = group alarm L = Low, LL = Low low, I = individual alarm X = function is required, R = remote	Monitoring		Automatic control				
			Incinerator			Auxiliary	
Identification of system parameter	Alarm	Indication	Slow-down	Shut-down	Control	Stand by Start	Stop
Flame failure	X			X			
Furnace temperature	H			X			
Exhaust gas temperature	H						
Fuel oil pressure		local					
Fuel oil temperature or viscosity **(1)**	H+L	local					
(1) Where heavy fuel is used							

Table 24 : Pressure vessel certification

Class	Drawing / Calculation		Material testing		Hydraulic test	
	Manufacturer	The Society	Manufacturer	The Society	Manufacturer	The Society
1	X	review	X	witness + workshop inspection	X	witness
2	X	review	X	review	X	witness
3	X	–	X	review	X	witness
Note 1: Certificates of the Manufacturer and the Society to be issued for all cases for pressure vessels covered by the Rules of the Society.						

6 Arrangement and installation

6.1 Foundations

6.1.1 For boilers and pressure vessels bolting down to their foundations, see Ch 1, Sec 1, [3.7.1]. Where necessary, they are also to be secured to the adjacent hull structures by suitable ties.

Where chocks are required to be fitted between the boilers and their foundations, they are to be of cast iron or steel.

6.2 Boilers

6.2.1 Thermal expansion

Means are to be provided to compensate thermal expansion of boilers.

6.2.2 Minimum distance of boilers from vertical bulkheads and fuel tanks

a) The distance between boilers and vertical bulkheads is to be not less than the minimum distance necessary to provide access for inspection and maintenance of the structure adjacent to the boiler.

b) In addition to the requirement in a), the distance of boilers from fuel oil tanks is to be such as to prevent the possibility that the temperature of the tank bulkhead may approach the flash point of the oil.

c) In any event, the distance between a boiler and a vertical bulkhead is not to be less than 450 mm.

6.2.3 Minimum distance of boilers from double bottom

a) Where double bottoms in way of boilers may be used to carry fuel oil, the distance between the top of the double bottom and the lower metal parts of the boilers is not to be less than:
   - 600 mm, for cylindrical boilers
   - 750 mm, for water tube boilers.

b) The minimum distance of vertical tube boilers from double bottoms not intended to carry oil may be 200 mm.

6.2.4 Minimum distance of boilers from ceilings

a) A space sufficient for adequate heat dissipation is to be provided on the top of boilers.

b) Oil tanks are not permitted to be installed in spaces above boilers.

6.2.5 Installation of boilers on engine room flats

Where boilers are installed on an engine room flat and are not separated from the remaining space by means of a watertight bulkhead, a coaming of at least 200 mm in height is to be provided on the flat. The area surrounded by the coaming may be drained into the bilge.

6.2.6 Drip trays and gutterways

Boilers are to be fitted with drip trays and gutterways in way of burners so arranged as to prevent spilling of oil into the bilge.

6.2.7 Hot surfaces

Hot surfaces with which the crew are likely to come into contact during operation are to be suitably guarded or insulated. See Ch 1, Sec 1, [3.4.1].

6.2.8 Registers fitted in the smoke stacks of oil fired boilers

Where registers are fitted in smoke stacks, they are not to obstruct more than two thirds of the cross-sectional area of gas passage when closed. In addition, they are to be provided with means for locking them in open position when the boiler is in operation and for indicating their position and degree of opening.

6.3 Pressure vessels

6.3.1 Safety devices on multiple pressure vessels

Where two or more pressure vessels are interconnected by a piping system of adequate size so that no branch of piping may be shut off, it is sufficient to provide them with one safety valve and one pressure gauge only.

6.4 Thermal oil heaters

6.4.1 In general, the requirements of [6.2] for boilers are also applicable to thermal oil heaters.

7 Material test, workshop inspection and testing, certification

7.1 Material testing

7.1.1 General

Materials, including welding consumables, for the constructions of boilers and pressure vessels are to be certified by the material manufacturer in accordance with the appropriate material specification.

7.1.2 Boilers, other steam generators, and oil fired and exhaust gas thermal oil heaters

In addition to the requirement in [7.1.1], testing of materials intended for the construction of pressure parts of boilers, other steam generators, oil fired thermal oil heaters and exhaust gas thermal oil heaters is to be witnessed by the Surveyor.

7.1.3 Class 1 pressure vessels and heat exchangers

In addition to the requirement in [7.1.1], testing of materials intended for the construction of class 1 pressure parts of pressure vessels and heat exchangers is to be witnessed by the Surveyor.

This requirement may be waived at the Society's discretion for mass produced small pressure vessels (such as accumulators for valve controls, gas bottles, etc.).

7.2 Workshop inspections

7.2.1 Boilers and individually produced class 1 and 2 pressure vessels

The construction, fitting and testing of boilers and individually produced class 1 and 2 pressure vessels are to be attended by the Surveyor, at the builder's facility.

7.2.2 Mass produced pressure vessels

Construction of mass produced pressure vessels which are type approved by the Society need not be attended by the Surveyor.

7.3 Hydrostatic tests

7.3.1 General

Hydrostatic tests of all class 1, 2 and 3 pressure vessels are to be witnessed by the Surveyor with the exception of mass produced pressure vessels which are built under the conditions stated in [7.2.2].

7.3.2 Testing pressure

a) Upon completion, pressure parts of boilers and pressure vessels are to be subjected to a hydraulic test under a pressure p_t defined below as a function of the design pressure p:
   - $p_t = 1,5\ p$ where $p \leq 4$ MPa
   - $p_t = 1,4\ p + 0,4$ where $4\ \text{MPa} < p \leq 25$ Mpa
   - $P_t = p + 10,4$ where $p > 25$ MPa

b) The test pressure may be determined as a function of a pressure lower than p; however, in such case, the setting and characteristics of the safety valves and other overpressure protective devices are also to be determined and blocked as a function of this lower pressure.

c) If the design temperature exceeds 300°C, the test pressure p_t is to be as determined by the following formula:

$$p_t = 1,5\frac{K_{100}}{K}p$$

where:

p : Design pressure, in MPa

K_{100} : Permissible stress at 100°C, in N/mm²

K : Permissible stress at the design temperature, in N/mm².

d) Consideration is to be given to the reduction of the test pressure below the values stated above where it is necessary to avoid excessive stress. In any event, the general membrane stress is not to exceed 90% of the yield stress at the test temperature.

e) Economisers which cannot be shut off from the boiler in any working condition are to be submitted to a hydraulic test under the same conditions as the boilers.

f) Economisers which can be shut off from the boiler are to be submitted to a hydraulic test at a pressure determined as a function of their actual design pressure p.

7.3.3 Hydraulic test of boiler and pressure vessel accessories

a) Boilers and pressure vessel accessories are to be tested at a pressure p_t which is not less than 1,5 times the design pressure p of the vessels to which they are attached.

b) The test pressure may be determined as a function of a pressure lower than p; however, in such case, the setting and characteristics of the safety valves and other overpressure protective devices are also to be determined and blocked as a function of this lower pressure.

7.3.4 Hydraulic test procedure

a) The hydraulic test specified in [7.3.1] is to be carried out after all openings have been cut out and after execution of all welding work and of the heat treatment, if any. The vessel to be tested is to be presented without lagging, paint or any other lining and the pressure is to be maintained long enough for the Surveyor to proceed with a complete examination.

b) Hydraulic tests of boilers are to be carried out either after installation on board, or at the manufacturer's plant. Where a boiler is hydrotested before installation on board, the Surveyor may, if deemed necessary, request to proceed with a second hydraulic test on board under a pressure at least equal to 1,1 p. For this test, the boiler may be fitted with its lagging. However, the Surveyor may require this lagging to be partially or entirely removed as necessary.

c) For water tube boilers, the hydraulic test may also be carried out separately for different parts of the boiler upon their completion and after heat treatment. For drums and headers, this test may be carried out before drilling the tube holes, but after welding of all appendices and heat treatment. When all parts of the boiler have been separately tested and following assembly the boiler is to undergo a hydraulic test under a pressure of 1,25 p.

7.3.5 Hydraulic tests of condensers

Condensers are to be subjected to a hydrostatic test at the following test pressures:

- steam space: 0,1 MPa
- water space: maximum pressure which may be developed by the pump with closed discharge valve increased by 0,07 MPa. However, the test pressure is not to be less than 0,2 MPa. When the characteristics of the pump are not known, the hydrostatic test is to be carried out at a pressure not less than 0,35 MPa.

7.4 Certification

7.4.1 Certification of boilers and individually produced pressure vessels

Boilers and individually produced pressure vessels of classes 1, 2 and 3 are to be certified by the Society in accordance with the procedures stated in Part A.

7.4.2 Mass produced pressure vessels

Small mass produced pressure vessels of classes 1, 2 and 3 may be accepted provided they are type approved by the Society in accordance with the procedures stated in Part A.

Section 4 Steam Turbines

1 General

1.1 Application

1.1.1 Propulsion turbines and turbines for essential services

The requirements of this Section apply to:

a) all propulsion turbines

b) turbines intended for essential services.

1.1.2 Auxiliary turbines driving generators

In addition to the requirements contained in this Section, auxiliary turbines driving electric generators are to comply with those of Ch 3, Sec 3.

1.2 Documentation to be submitted

1.2.1 For propulsion turbines and turbines driving machinery intended for essential services, the plans and data listed in Tab 1 are to be submitted.

All listed plans are to be constructional plans complete with all dimensions and are to contain full indication of the types of materials employed.

Table 1 : Documents to be submitted

No	A/I **(1)**	Item
1	I	Sectional assembly
2	A	Rotors and discs, revolving and stationary blades for each turbine
3	A	Fastening details of revolving and stationary blades
4	A	Casings
5	A	Schematic diagram of control and safety devices
6	I	General specification of the turbine, including an operation and instruction manual
7	I	Maximum power and corresponding maximum rotational speed, and the values of pressure and temperature at each stage
8	A	Material specifications of the major parts, including their physical, chemical and mechanical properties, the data relevant to rupture and creep at elevated temperatures, when the service temperature exceeds 400°C, the fatigue strength, the corrosion resistance and the heat treatments
9	I	Distribution box
10	A	Strength calculations of rotors, discs and blades and blade vibration calculations
11	A	Where the rotors, stators or other components of turbines are of welded construction, all particulars on the design of welded joints, welding conditions, heat treatments and non-destructive examinations after welding
(1) A = To be submitted for approval ; I = To be submitted for information		

2 Design and construction

2.1 Materials

2.1.1 Rotating components

a) Rotors, shafts and discs of turbines are to be of forged steel. In general, the forgings are to have minimum tensile strength R_m within the limits in Tab 2.

b) Rotors of small turbines may be built of special cast steels.

c) Turbine blades are to be built of corrosion-resistant materials.

Table 2 : Limits of R_m

Steel	R_m limits (N/mm²)
Carbon and carbon-manganese steel	$400 < R_m < 600$
Alloy steels for rotors	$500 < R_m < 800$
Alloy steels for discs and other forgings	$500 < R_m < 1000$

2.1.2 Static components

The casings and diaphragms of turbines are to be built of forged or cast steels capable of withstanding the pressures and temperatures to which they are subjected. Cast iron may be used for temperatures up to 300°C.

2.2 Design and constructional details

2.2.1 Rotors and stators

a) All components of turbines are to be free from defects and are to be built and installed with tolerances and clearances such as to allow thermal expansion and to minimise the distortions of casings and rotors in all expected service conditions.

b) Particular care is to be devoted to preventing condensation water from accumulating in the blade spaces of the casings. Adequate drain tubes and cocks are to be arranged in a suitable position, in the lower parts of the casings. Cocks are to be easy to operate.

c) When labyrinth packings are used, the steam supply pipes to the sealing system are to be so arranged that condensed steam may not enter the turbine.

d) Particular attention is to be paid to the connection of pipes to the turbine stators in order to avoid abnormal loads in service.

e) Smooth fillets are to be provided at changes of section of rotors, discs and blade roots. The holes in discs are to be well rounded and polished.

2.2.2 Bearings

a) Turbine bearings are to be so located that their lubrication is not impaired by overheating from adjacent hot parts.

b) Lubricating oil is to be prevented from dripping on high temperature parts.

c) Suitable arrangements for cooling the bearings after the turbines have been stopped may also be required, at the discretion of the Society.

2.2.3 Turning gear

a) Main propulsion turbines are to be equipped with turning gear for both directions of rotation. The rotors of auxiliary turbines are to be capable of being turned by hand.

b) The engagement of turning gear is to be visually indicated at the control platform.

c) An interlock is to be provided to ensure that the turbine cannot be started up when the turning gear is engaged.

2.2.4 Interlock

The simultaneous admission of steam to the ahead and astern turbines is to be prevented by interlocks. Brief overlapping of the ahead and astern valves during manoeuvring may be permitted.

2.2.5 Turbine exhaust

a) Sentinel valves or other equivalent means are to be provided at the exhaust end of all turbines. The valve discharge outlets are to be clearly visible and suitably guarded, as necessary.

b) Where, in auxiliary steam turbines, the inlet steam pressure exceeds the pressure for which the exhaust casing and associated piping up to the exhaust valve are designed, means to relieve the excess pressure are to be provided.

2.2.6 Water accumulation prevention

a) Non-return valves or other approved means are to be fitted in bled steam connections to prevent steam and water returning into the turbines.

b) Bends are to be avoided in steam piping in which water may accumulate.

2.2.7 Steam strainers

Efficient steam strainers are to be provided close to the inlets to ahead and astern high pressure turbines or alternatively at the inlets to manoeuvring valves.

2.2.8 Emergency arrangements

a) In single screw ships fitted with compound main turbine installations the arrangements are to be such as to enable safe navigation when the steam led to any one of the turbines is cut off. For this purpose the steam may be led direct to the low pressure (L.P.) turbine and either the high pressure (H.P.) or medium pressure (M.P.) turbine can exhaust direct to the condenser.

Adequate arrangements and controls are to be provided for these operating conditions so that the pressure and temperature of the steam will not exceed those which the turbines and condenser can safely withstand.

The necessary pipes and valves for these arrangements are to be readily available and properly marked. A fit up test of all combinations of pipes and valves is to be performed prior to the first sea trials.

The permissible power/speeds when operating without one of the turbines (all combinations) is to be specified and information provided on board.

The operation of the turbines under emergency conditions is to be assessed for the potential influence on shaft alignment and gear teeth loading conditions.

b) Units classed for unrestricted service and fitted with a steam turbine propulsion plant and only one main boiler are to be provided with means to ensure emergency propulsion in the event of failure of the main boiler.

2.3 Welded fabrication

2.3.1 The manufacturer's requirements relative to the welding of turbine rotors or major forged or cast pieces, where permitted, are to be readily identifiable when the plans are submitted to the Society for approval. Requirements relative to fabrication, welding, heat treatments, examinations, testing and acceptance will be stipulated on a case by case basis.

In general, all weldings are to be carried out by qualified welders in accordance with qualified welding procedures and using approved consumables.

2.4 Control, monitoring and shut-off devices

2.4.1 Governors

a) Turbines for main propulsion machinery equipped with controllable pitch propellers, disengaging couplings or electrical transmission systems are to be fitted with an additional speed governor which, in the event of a sudden loss of load, prevents the revolutions from increasing to the trip speed.

b) The speed increase of turbines driving electric generators -except those for electrical propeller drive- resulting from a change from full load to no-load may not exceed 5% on the resumption of steady running conditions. The transient speed increase resulting from a sudden change from full load to no-load conditions is not to exceed 10% and is to be separated by a sufficient margin from the trip speed.

2.4.2 Overspeed devices

a) Each main and auxiliary turbine is to be provided with an overspeed protective device to prevent the rotational speed from exceeding the maximum rotational by more than 15%. The device is to be actuated by the turbine shaft.

b) Where two or more steam turbines are coupled to the same gear wheel, the Society may accept the fitting of only one overspeed device for all the coupled turbines.

c) For turbines driving electric generators, the overspeed protective device mentioned in a) is also to be fitted with a means for manual tripping.

d) Where exhaust steam from auxiliary systems is led to the main turbine, provision is to be made to cut off the steam automatically when the overspeed protective device is activated.

2.4.3 Rotor axial displacement

A quick-closing valve is to be provided which automatically shuts off the steam supply in the event of axial displacement of the rotor beyond the permissible limits stated by the manufacturer. The device controlling the valve is to be actuated by the turbine shaft.

2.4.4 Emergency oil supply

For the emergency lubricating oil supply, see Ch 1, Sec 7, [12.5].

2.4.5 Bearing lubrication failure

a) Main ahead turbines are to be provided with a quick-closing valve which automatically shuts off the steam supply in the event of a dangerous reduction in oil pressure in the bearing lubricating system.

b) This arrangement is to be such as to ensure the admission of steam to the astern turbine for braking purposes.

2.4.6 Shut-off arrangement

a) Arrangements are to be provided for shutting off the steam to the main turbines by a suitable hand trip device controlling the steam admission valve situated at the control platform and at the turbine itself.

b) Hand tripping for auxiliary turbines is to be arranged in the proximity of the turbine overspeed protective device.

c) The hand trip device is any device which is operated manually irrespective of the way the action is performed, i.e. mechanically or by means of external power.

d) The quick-closing valves are also to be manually operable at the turbine and from the control platform.

e) Re-setting of the quick-closing valve device may be effected only at the turbine or from the control platform with the control valves in the closed position.

f) Where the valves are operated by hydraulic oil systems fitted for automatic operation, they are to be fed by two pumps: one main pump and one standby pump. In any event, the standby pump is to be independent. In special cases, at the Society's discretion, a hand-operated pump may be accepted as a standby pump.

g) The starting up of any turbine is to be possible only when the quick-closing devices are ready for operation.

h) A quick-closing device is to be provided which automatically shuts off the steam supply in the event of an increase in pressure or water level in the condenser beyond the permissible limits.

2.4.7 Summary Tables

Tab 3 and Tab 4 summarise the minimum control and monitoring requirements for main propulsion and auxiliary turbines, respectively.

Table 3 : Main propulsion turbine

Symbol convention H = High, HH = High high, G = group alarm L = Low, LL = Low low, I = individual alarm X = function is required, R = remote	Monitoring		Automatic control				
			Turbine			Auxiliary	
Identification of system parameter	Alarm	Indication	Slow-down	Shut-down	Control	Stand by Start	Stop
• Main turbine speed		local					
	H			X			
					X		
• Main turbine axial displacement	X	local		X			
• Main turbine vibration	H	local					
Lubricating oil							
• Supply pressure		local					
	L			X(**2**)			
• Level of gravity tank	L(**1**)	local					
(1) Sensor to be located near the normal level **(2)** This is not to prevent astern operation for braking							

Table 4 : Auxiliary turbine

Symbol convention H = High, HH = High high, G = group alarm L = Low, LL = Low low, I = individual alarm X = function is required, R = remote	Monitoring		Automatic control				
			Turbine			Auxiliary	
Identification of system parameter	Alarm	Indication	Slow-down	Shut-down	Control	Stand by Start	Stop
Overspeed	H	local		X			
Rotor displacement	X	local		X			
Vibration	H	local					
Lubricating oil supply pressure	L			X			
Lubricating oil level in gravity tank	L						

3 Arrangement and installation

3.1 Foundations

3.1.1 Shipyards and Manufacturers are to take care that foundations of turbines and connected reduction gears are to be designed and built so that hull movements do not give rise to significant movements between reduction gears and turbines. In any event, such movements are to be absorbed by suitable couplings.

3.2 Jointing of mating surfaces

3.2.1 The mating flanges of casings are to form a tight joint without the use of any interposed material.

3.3 Piping installation

3.3.1 Pipes and mains connected to turbine casings are to be fitted in such a way as to minimise the thrust loads and moments.

3.4 Hot surfaces

3.4.1 Hot surfaces with which the crew are likely to come into contact during operation are to be suitably guarded or insulated. See Ch 1, Sec 1, [3.4].

3.5 Alignment

3.5.1 The Shipyard and the Manufacturer are to take particular care in the alignment of turbine-reduction gearing, taking account of all causes which may alter the alignment from cold conditions to normal service conditions.

When a structural tank is fitted in way of the turbine or gearing foundations, the expected tank temperature variations are to be taken into account during alignment operations.

Propulsion turbines are to be fitted with indicators showing the axial movements of rotors with respect to casings and the sliding movements of casings on the sliding feet.

3.6 Circulating water system

3.6.1 The circulating water system with vacuum ejectors is to be so arranged that water may not enter the low pressure turbines.

3.7 Gratings

3.7.1 Gratings and any other structures in way of the sliding feet or flexible supports are to be so arranged that turbine casing expansion is not restricted.

3.8 Drains

3.8.1 Turbines and the associated piping systems are to be equipped with adequate means of drainage.

3.9 Instruments

3.9.1 Main and auxiliary turbines are to be fitted with callipers and micrometers of a suitable type for verifying the alignment of rotors and pinion and gear-wheel shafts.

This check is to be performed to the Surveyor's satisfaction at the time of installation.

4 Material tests, workshop inspection and testing, certification

4.1 Material tests

4.1.1 Parts to be tested

The materials for the construction of the parts listed in Tab 5 are to be tested in compliance with the requirements of NR216.

Magnetic particle or liquid penetrant tests are required for the parts listed in Tab 5 and are to be effected by the Manufacturer in positions agreed upon by the Surveyor, where Manufacturer's experience shows defects are most likely to occur.

For important structural parts of the turbine, in addition to the above-mentioned non-destructive tests, examination of welded seams by approved methods of inspection may be required.

Where there are grounds to doubt the soundness of any turbine component, non-destructive tests using approved detecting methods may be required.

Table 5 : Material and non-destructive tests

Turbine component	Material tests (mechanical properties and chemical composition)	Non-destructive tests	
		Magnetic particle or liquid penetrant	Ultrasonic or X Ray examination
Rotating parts (turbine rotors, shafts, stiff and flexible couplings, bolts for couplings and other dynamically stressed parts, integral pinions and gears)	all	all	sample
Stationary parts (castings and plates for casings)	all	spot as agreed between the Manufacturer and the Surveyor	–
Blades	sample	sample	sample
Piping and associated fittings	as required in the appropriate Section of the Rules	as required in the appropriate Section of the Rules	as required in the appropriate Section of the Rules

4.1.2 Special auxiliary turbines

In the case of auxiliary turbines with a steam inlet temperature of up to 250°C, the extent of the tests stated in Tab 5 may be limited to the disc and shaft materials.

4.2 Inspections and testing during construction

4.2.1 Inspections during construction

The following inspections and tests are to be carried out in the presence of the Surveyor during the construction of all turbines which are indicated in [1.1.1]. For shipboard tests, see Ch 1, Sec 11, [3.3].

- material tests, as required (see [4.1])
- welded fabrication (see [4.2.2])
- non-destructive examination of turbine blades (see [4.2.3])
- hydrostatic tests (see [4.2.4])
- safety valves (see [4.2.5])
- thermal stability test of rotor (see [4.2.6])
- rotor balancing and overspeed test (see [4.2.7] and [4.2.8])
- shop trials (see [4.2.9]).

4.2.2 Welded fabrication

Welded fabrication and testing is to be attended by the Surveyor, as may be deemed necessary by the Society.

4.2.3 Turbine blades

When turbine blades are calculated using a permissible stress $K > R_m/4$, all turbine rotor blades are to be checked by dye penetrants or other equivalent method.

4.2.4 Hydrostatic tests

a) Turbine and nozzle casings are to be subjected to a hydrostatic test at the greater of the following test pressures:
   - 1,5 times the working pressure
   - 1,5 times the starting pressure
   - the test pressure is not to be less than 0,2 N/mm^2.

b) The turbine casings may be temporarily subdivided by diaphragms in order to obtain different pressure values for the various stages, if necessary.

c) Where it is not possible to perform hydrostatic tests, the manufacturer may submit to the Society, for consideration, alternative proposals for testing the integrity of turbine casings and the absence of defects therein.

d) For the bodies of quick-closing, safety, manoeuvring and control valves, the test pressure is to be 1,5 times the maximum allowable working pressure of the boiler (approval pressure). The sealing efficiency of these valves when closed is to be tested at 1,1 times the working pressure.

e) Intermediate coolers and heat exchangers are to be subjected to a hydrostatic test at 1,5 times the working pressure.

f) Pressure piping, valves and other fittings are to be subjected to hydrostatic tests in compliance with the normal requirements for these items.

4.2.5 Safety valves

All valves required in [2.4] are to be tested at their setting pressure in the presence of the Surveyor, as specified by the turbine manufacturer.

4.2.6 Thermal stability test of rotors

Solid forged and welded rotors of propulsion turbines are to be subjected to a thermal stability test where the service temperature exceeds 400°C. This test is to be carried out after heat treatment and rough machining or at a later stage of fabrication, in accordance with a procedure approved by the Society.

4.2.7 Balancing of rotors

Finished rotors, complete with all fittings and blades, are to be dynamically balanced in a balancing machine of appropriate sensitivity in relation to the size of the rotor. Normally this test is to be carried out with the primary part of the flexible coupling, if any.

4.2.8 Overspeed test of rotors

Finished rotors, complete with all fittings and blades, are to be subjected for at least 3 minutes to an overspeed test at the greater of the following values:

- 5% above the setting speed of the overspeed tripping device
- 15% above the maximum design speed.

The Society may waive this requirement provided that it can be demonstrated by the manufacturer, using an acceptable direct calculation procedure, that the rotor is able to safely withstand the above values of overspeed and that rotors are free from defects, as verified by means of non-destructive tests.

4.2.9 Shop trials

Where turbines are subjected to a trial run at the factory, the satisfactory functioning of the control, safety and monitoring equipment is to be verified by the Manufacturer during the trial run. Such verification is in any event to take place not later than the commissioning of the plant aboard ship.

In general, propulsion steam turbines are to be subjected to a works trial under steam but without load, up to the service rotational speed, as far as possible. In the course of the works trials, the overspeed devices for both main and auxiliary turbines are to be set.

4.3 Certification

4.3.1 Turbines required to be certified

For turbines required to be certified as per [1.1.1], Society's certificates (C) (see NR216, Ch 1, Sec 1, [4.2.1]) are required for material tests of rotating components and blades listed in Tab 5 and for works trials as per [4.2.1]. Provided the manufacturer has a quality assurance system accepted by the Society, a reduced number of inspections in the presence of the Surveyor may be agreed.

4.3.2 Turbines not required to be certified

For turbines not required to be certified as per [1.1.1], manufacturer's certificates including details of tests and inspections carried out at the shop are to be submitted. The acceptance of these turbines is, however, subject to their satisfactory performance during dock and sea trials.

4.3.3 Type approved turbines

For mass produced turbines which are requested to be type approved by the Society, the tests and trials on a prototype are to be carried out in the presence of the Surveyor as stated in [4.3.1]. The minimum required attendance of the Surveyor at the production tests and trials will be agreed between the manufacturer and the Society on a case by case basis.

Section 5 Gas Turbines

1 General

1.1 Application

1.1.1 Propulsion turbines and turbines for essential services

The requirements of this Section apply to:

a) all propulsion turbines

b) turbines intended for essential services and for the safety of the unit.

1.1.2 Turbines for auxiliary generators

In addition to the requirements contained in this Section, auxiliary turbines driving electric generators are to comply with the applicable requirements of Ch 3, Sec 3.

1.1.3 Type approval

Turbines intended for propulsion and essential services are to be type approved by the Society.

1.2 Definition of rated power

1.2.1 Rated power is the maximum constant power that the turbine can develop at constant speed in the range of air inlet temperature between 0°C and 35°C. This power is to be considered with 0 intake and exhaust losses and with an air relative humidity of 60%.

1.3 Documentation to be submitted

1.3.1 For propulsion turbines and turbines intended for driving machinery for essential services, the plans listed in Tab 1 are to be submitted.

The listed constructional plans are to be complete with all dimensions and are to contain full indication of the types of materials used.

Table 1 : Documents to be submitted

No.	A/I **(1)**	Item
1	I	Sectional assembly
2	A	Detailed drawings of rotors, casings, blades, combustion chambers and heat exchangers **(2)**
3	A	Material specifications of the major parts, including their physical, chemical and mechanical properties, the data relevant to rupture and creep at elevated temperatures, the fatigue strength, the corrosion resistance and the heat treatments **(2)**
4	A	Where the rotors, stators or other components of turbines are of welded construction, all particulars on the design of welded joints, welding procedures and sequences, heat treatments and non-destructive examinations after welding **(2)**
5	I	General specification of the turbine, including instruction manual, description of structures and specification of the properties of fuel and lubricating oil to be used
6	I	Details of operating conditions, including the pressure and temperature curves in the turbine and compressor at the rated power and corresponding rotational speeds, and details of permissible temporary operation beyond the values for the rated power
7	A	Diagrammatic layout of the fuel system, including control and safety devices, and of the lubricating oil system
8	A	Cooling system layout, if applicable
9	I	Where applicable, background information on previous operating experience in similar applications
10	I	Maintenance and overhaul procedures
11	A	Stress and temperature analysis in blades, rotors and combustion chamber **(2)**
12	A	Life time calculation of hot and high stress parts **(2)**
13	A	Blade and rotor vibration analysis **(2)**
14	A	Details of automatic safety devices together with failure mode and effect analysis **(2)**

(1) A = To be submitted for approval ; I = To be submitted for information

(2) As an alternative, the Society may, on a case by case basis, consider reviewing a number of selected packages relative to important and critical parts of the turbine, where all the design, construction, inspection, testing and acceptance criteria used by the manufacturer are clearly described, provided the Quality Assurance system of the manufacturer is approved and certified by the Society.

2 Design and construction

2.1 Materials

2.1.1 Approved materials

a) Gas turbine materials are to fulfil the requirements imposed by the operating conditions of the individual components. In the choice of materials, account is to be taken of effects such as creep, thermal fatigue, oxidation and corrosion to which individual components are subject when in service. Evidence of the suitability of the materials is to be supplied to the Society in the form of details of their chemical and mechanical properties and of the heat treatment applied. Where composite materials are used, their method of manufacture is to be described.

b) Turbine blades are to be built of corrosion and heat-resistant materials.

2.2 Stress analyses

2.2.1 Calculation

a) The manufacturer is to submit the results of calculation of the stresses on each rotor under the most severe service conditions.

b) Fatigue analysis on each rotor, taking into account the stress concentrations, is also to be submitted.

c) The results of previous in-service experience on similar applications may be considered by the Society as an alternative to items a) and b) above.

The calculations and analyses (see also [1.3.1]) are to be carried out in accordance with criteria agreed by the Society. Data on the design service life and test results used to substantiate calculation assumptions are also to be provided.

2.2.2 Vibrations

The range of service speeds is not to give rise to unacceptable bending vibrations or to vibrations affecting the entire installation. Calculations of the critical speeds including details of their basic assumptions are to be submitted.

2.3 Design and constructional details

2.3.1 Rotors and stators

a) All components of turbines and compressors are to be free from defects and are to be built and installed with tolerances and clearances in order to allow thermal expansion and to minimise the distortions of casings and rotors in all expected service conditions.

b) Adequate drain tubes and cocks are to be arranged in a suitable position, in the lower parts of the casings. Cocks are to be easily operated.

c) Suitable protective devices are to be provided in order to prevent heat, noise or possible failure of rotating parts from causing injury to personnel. If, to this end, the whole gas turbine is enclosed in a protective covering, the covering is to be adequately ventilated inside.

d) Particular attention is to be paid to the connection in the casings of pipes to the turbine stators in order to avoid abnormal loads in service.

e) Smooth fillets are to be provided at changes of sections of rotors, discs and blade roots. The holes in discs are to be well rounded and polished.

2.3.2 Access and inspection openings

a) Access to the combustion chambers is to be ensured. Means are to be provided to inspect the burner cans or combustion chamber without having to remove the gas generator.

b) Inspection openings are to be provided to allow the gas turbine flow path air to be inspected with special equipment, e.g. a bore-scope or similar, without the need for dismantling.

2.3.3 Bearings

a) Turbine bearings are to be so located that their lubrication is not impaired by overheating from hot gases or adjacent hot parts.

b) Lubricating oil or fuel oil is to be prevented from dripping on high temperature parts.

c) Suitable arrangements for cooling the bearings after the turbines have been stopped are to be provided, if necessary to prevent bearing cooking.

d) Roller bearings are to be identifiable and are to have a life adequate for their intended purpose. In any event, their life cannot be less than 40000 hours.

2.3.4 Turning gear

a) Main propulsion turbines are to be equipped with turning gear or a starter for cranking. The rotors of auxiliary turbines are to be capable of being turned by hand.

b) The engagement of the turning gear or starter is to be visually indicated at the control platform.

c) An interlock is to be provided to ensure that the main turbine cannot be started up when the turning gear is engaged.

2.3.5 Cooling

The turbines and their external exhaust system are to be suitably insulated or cooled to avoid excessive outside temperature.

2.3.6 Air supply

a) The air intake ducting is to be equipped to prevent extraneous substances from entering the compressor and turbine.

b) Measures are to be taken to control the salinity of the combustion air, to meet the manufacturer's specification.

c) Cleaning equipment is to be provided to remove deposits from compressors and turbines.

d) Means are to be provided to prevent the formation of ice in the air intake.

2.3.7 Turbine exhaust arrangement

a) The gas exhaust arrangement is to be designed in such a way as to prevent the entrance of gases into the compressor.

b) Silencers or other equivalent arrangements are to be provided in the gas exhaust, to limit the airborne noise at one metre distance from the turbine to not more than 110 dB (A) in unmanned machinery spaces and not more than 90 dB (A) in manned spaces.

2.3.8 Multi-turbine installations

Multi-turbine installations are to have separate air inlets and exhaust systems to prevent recirculation through the idle turbine.

2.3.9 Fuel

a) Where the turbine is designed to burn non-distillate fuels, a fuel treatment system is to be provided to remove, as far as practicable, the corrosive constituents of the fuel or to inhibit their action in accordance with the manufacturer's specification.

b) Suitable means are to be provided to remove the deposits resulting from the burning of the fuel while avoiding abrasive or corrosive action, if applicable.

c) Gas turbines burning boil-off gases of liquefied gas cargo tanks will be specially considered by the Society taking into account the requirements of Pt D, Ch 9, Sec 16 of the Ship Rules.

2.3.10 Start-up equipment

a) Gas turbines are to be fitted with start-up equipment enabling them to be started up from the "shutdown" condition.

b) Provisions are to be made so that any dangerous accumulation of liquid or gaseous fuel inside the turbines is thoroughly removed before any attempt at starting or restarting.

c) Starting devices are to be so arranged that firing operation is discontinued and the main fuel valve is closed within a pre-determined time when ignition is failed.

d) The starting system is to be so designed as to satisfy the requirements dealing with diesel engine starting insofar as they apply.

2.3.11 Astern power

For main propulsion machinery with reverse gearing, controllable pitch propellers or an electrical transmission system, astern running is not to cause any overloading of the propulsion machinery.

2.3.12 Emergency operation

a) In installations with more than one propeller and connected shafting and more than one turbine, the failure of any gas turbine unit connected to a shafting line is not to affect the continued, independent operation of the remaining units.

b) In installations with only one propeller and connected shafting, driven by two or more main turbines, care is to be taken to ensure that, in the event of one of the turbines failing, the others are able to continue operation independently.

c) Units classed for unrestricted service and fitted with only one propeller and connected shafting driven by a gas turbine are to be provided with means to ensure emergency propulsion in the event of failure of the main turbine.

2.4 Welded fabrication

2.4.1 The manufacturer's requirements relative to the welding of turbine rotors or major forged or cast pieces, where permitted, are to be readily identifiable by the Society in the plans submitted for approval.

In general, all weldings are to be carried out by qualified welders in accordance with qualified welding procedures using approved consumables.

2.5 Control, monitoring and shut-off devices

2.5.1 Control and monitoring arrangement

For each main propulsion system, the associated control and monitoring equipment is to be grouped together at each location from which the turbine may be controlled.

2.5.2 Governors and speed control system

a) Propulsion turbines which may be operated in no-load conditions are to be fitted with a control system capable of limiting the speed to a value not exceeding 10% of the maximum continuous speed.

b) Turbines for main propulsion machinery equipped with controllable pitch propellers, disengaging couplings or an electrical transmission system are to be fitted with a speed governor which, in the event of a sudden loss of load, prevents the revolutions from increasing to the trip speed.

c) In addition to the speed governor, turbines driving electric generators are to be fitted with a separate overspeed protective device, with a means for manual tripping, adjusted so as to prevent the rated speed from being exceeded by more than 15%.

d) The speed increase of turbines driving electric generators - except those for electrical propeller drive - resulting from a change from full load to no-load is not to exceed 5% on the resumption of steady running conditions. The transient speed increase resulting from a sudden change from full load to no-load conditions is not to exceed 10% and is to be separated by a sufficient margin from the trip speed. Alternative requirements may be considered by the Society on a case by case basis based on the actual turbine design and arrangement.

2.5.3 Monitoring system

The main operating parameters (pressure, temperature, rpm, etc.) are to be adequately monitored and displayed at the control console.

Table 2 : Main propulsion and auxiliary turbines

Symbol convention H = High, HH = High high, G = group alarm L = Low, LL = Low low, I = individual alarm X = function is required, R = remote	Monitoring		Automatic control				
			Turbine			Auxiliary	
Identification of system parameter	Alarm	Indication	Slow-down	Shut-down	Control	Stand by Start	Stop
• Control system failure	X						
• Automatic starting failure	X						
Mechanical monitoring of gas turbine							
• Speed		local					
					X		
	H			X			
• Rotor axial displacement (Not applicable to roller bearing)		local					
	H			X			
• Vibration	H	local					
• Performed number of cycle of rotating part	H						
Gas generator monitoring							
• Flame and ignition failure	X			X			
• Fuel oil supply pressure	L	local					
• Fuel oil supply temperature	H	local					
• Cooling medium temperature	H	local					
• Exhaust gas temperature or gas temperature in specific locations of flow gas path (Alarm before shutdown)		local					
	H			X			
• Pressure at compressor inlet (alarm before shutdown)		local					
	L			X			
Lubricating oil							
• Turbine supply pressure		local					
	L			X			
• Differential pressure across lubricating oil filter	H	local					
• Bearing or lubricating oil (discharge) temperature	H	local					

2.5.4 Emergency shut-off

a) An emergency push-button shut-off device is to be provided at the control console.

b) Any shut-off device provided in pursuance of the above is to shut off the fuel supply as near the burners as possible.

2.5.5 Quick-closing devices

a) Re-setting of the quick-closing device may be effected only at the turbine or from the control platform with the fuel supply control valve in the closed position.

b) When the devices are operated by hydraulic oil systems fitted for automatic operation, they are to be fed by two pumps: one main pump and one standby pump. In any event, the standby pump is to be independent. In special cases, a hand-operated pump may be accepted as a standby pump.

c) The starting up of any turbine is to be possible only when the quick-closing devices are ready for operation.

2.5.6 Automatic temperature controls

The following turbine services are to be fitted with automatic temperature controls so as to maintain steady state conditions within the normal operating range of the main gas turbine:

a) lubricating oil supply and discharge

b) fuel oil supply (or, alternatively, automatic control of fuel oil viscosity)

c) exhaust gas in specific locations of the flow gas path as determined by the manufacturer.

2.5.7 Indicators, alarm and shutdown

Tab 2 indicates the minimum control and monitoring requirements for main propulsion and auxiliary turbines.

3 Arrangement and installation

3.1 Foundations

3.1.1 Manufacturers and Shipyards are to arrange foundations of turbines and connected reduction gears to be so designed and built that hull movements do not give rise to significant movements between reduction gears and turbines. In any event, such movements are to be absorbed by suitable couplings.

3.2 Joints of mating surfaces

3.2.1 The mating flanges of casings are to form a tight joint without the use of any interposed material.

3.3 Piping installation

3.3.1 Pipes and mains connected to turbine and compressor casings are to be fitted in such a way as to minimise the thrust loads and moments. If flexible hoses are used for this purpose, they are to comply with the requirements in Ch 1, Sec 7, [2.6].

3.4 Hot surfaces

3.4.1 Hot surfaces with which the crew are likely to come into contact during operation are to be suitably guarded or insulated. See Ch 1, Sec 1, [3.4].

3.5 Alignment

3.5.1

a) The Manufacturer is to take particular care in the alignment of turbine-reduction gearing, taking account of all causes which may alter the alignment from cold conditions to normal service conditions.

b) When a structural tank is fitted in way of the turbine or gearing foundations, the expected tank temperature variations are to be taken into account during alignment operations.

c) Propulsion turbines are to be fitted with indicators showing the axial movements of rotors with respect to casings and the sliding movements of casings on the sliding feet. Such indicators are to be fitted in an easily visible position. This requirement does not apply to turbines fitted with roller bearings.

3.6 Gratings

3.6.1 Gratings and any other structures in way of the sliding feet or flexible supports are to be so arranged that turbine casing expansion is not restricted.

3.7 Drains

3.7.1 Turbines and the associated piping systems are to be equipped with adequate means of drainage.

3.8 Instruments

3.8.1 Main and auxiliary turbines are to be fitted with callipers and micrometers of a suitable type for verifying the alignment of rotors and pinion and gear-wheel shafts, when necessary.

At the time of installation on board, this check is to be performed in the presence and to the satisfaction of the Surveyor.

4 Material tests, workshop inspection and testing, certification

4.1 Type tests - General

4.1.1 Upon finalisation of the design for production of every new turbine type intended for installation on board ships, one turbine is to be presented for type testing as required below.

A type test carried out for a particular type of turbine at any manufacturer's works will be accepted for all turbines of the same type built by licensees and licensors.

Turbines which are subjected to type testing are to be tested in accordance with the scope specified below, it being taken for granted that:

- the turbine is optimised as required for the conditions of the type test
- the investigations and measurements required for reliable turbine operation have been carried out during preliminary internal tests by the turbine manufacturer
- the documentation to be submitted as required in [1.3.1] has been examined and, when necessary, approved by the Society and the latter has been informed regarding the nature and extent of investigations carried out during pre-production stages.

4.2 Type tests of turbines not admitted to an alternative inspection scheme

4.2.1 General

Turbines for which the Manufacturer is not admitted to testing and inspections according to an alternative inspection scheme (see NR320 Certification Scheme of Materials and Equipment for the Classification of Marine Units, Sec 1, [3.2]), are to be type tested in the presence of the Surveyor in accordance with the following requirements.

The type test is subdivided into three stages:

a) Stage A - Preliminary internal tests carried out by the manufacturer

Stage A includes functional tests and collection of operating values including testing hours during the internal tests, the relevant results of which are to be presented to the Surveyor during the type test. Testing hours of components which are inspected are to be stated by the manufacturer.

b) Stage B - Type approval test

The type approval test is to be carried out in the presence of the Surveyor.

c) Stage C - Inspection of main turbine components.

After completion of the test programme, the main turbine components are to be inspected.

The turbine manufacturer is to compile all results and measurements for the turbine tested during the type test in a type test report, which is to be submitted to the Society.

4.2.2 Stage A - Internal tests (functional tests and collection of operating data)

a) During the internal tests the turbine is to be operated at the load points considered important by the turbine manufacturer and the relevant operating values are to be recorded.

b) The load points may be selected according to the range of application.

c) Functional tests under normal operating conditions include:

1) The load points 25%, 50%, 75%, 100% of the rated power for which type approval is requested, to be carried out:
   - along the nominal (theoretical) propeller curve and at constant speed, for propulsion turbines
   - at constant speed, for turbines intended for generating sets.

2) The limit points of the permissible operating range.

These limit points are to be defined by the turbine manufacturer.

d) An alternative testing program may be agreed between the manufacturer and the Society on a case by case basis.

4.2.3 Stage B - Type approval tests in the presence of the Surveyor

During the type test, the tests listed below are to be carried out in the presence of the Surveyor and the results are to be recorded in a report signed by both the turbine manufacturer and the Surveyor.

Any departures from this programme are to be agreed upon by the manufacturer and the Society.

a) Load points

The load points at which the turbine is to be operated according to the power/speed diagram are those listed below. The data to be measured and recorded when testing the turbine at various load points are to include all necessary parameters for turbine operation.

The operating time per load point depends on the turbine characteristics (achievement of steady-state condition) and the time for collection of the operating values.

Normally, an operating time of 0,5 hour per load point can be assumed.

At the maximum continuous power as per the following item (1) an operating time of two hours is required. Two sets of readings are to be taken at a minimum interval of one hour.

1) test at maximum continuous power P: i.e. 100% output at 100% torque and 100% speed.
2) test at maximum permissible torque (normally 110% of nominal torque T) at 100% speed; or test at maximum permissible power and speed according to the nominal propeller curve.
3) tests at partial loads, e.g. 75%, 50%, 25% of maximum continuous power P and speed according to the nominal propeller curve.

b) Additional tests
- test at lowest turbine speed according to the nominal propeller curve
- starting tests
- governor tests
- testing and rating of the safety systems.

4.2.4 Evaluation of test results

The results of the tests and checks required by [4.2.3] will be evaluated by the attending Surveyor. Normally the main operating data to be recorded during the tests are those listed in [4.3.4].

The values of temperatures and pressures of media, such as cooling media, lubricating oil, exhaust gases, etc., are to be within limits which, in the opinion of the Surveyor, are appropriate for the characteristics of the turbine tested.

4.2.5 Stage C - Inspection of turbine components

Immediately after the test run as per [4.2.3], a selected number of components agreed between the manufacturer and the Society are to be presented for inspection to the Surveyor.

4.3 Type tests of turbines admitted to an alternative inspection scheme

4.3.1 General

Turbines admitted to testing and inspections according to an alternative inspection scheme (see NR320, Sec 1, [3.2]) are to be type tested in the presence of the Surveyor in accordance with the following requirements.

The selection of the turbine to be tested from the production line is to be agreed upon with the Surveyor.

4.3.2 Type test

The programme of the type test is to be in general as specified below, P being the rated power and n the corresponding speed.

Any departures from this programme are to be agreed upon by the manufacturer and the Society.

a) 6 hours at full power

b) 10 hours shared at different partial loads (25%, 50%, 75% and 90% of power P);

c) 2 hours at intermittent loads

d) starting tests

e) testing of speed governor, overspeed device and lubricating oil system failure alarm device

f) testing of the minimum speed along the nominal (theoretical) propeller curve, for main propulsion turbines driving fixed pitch propellers, and of the minimum speed with no brake load, for main propulsion turbines driving controllable pitch propellers or for auxiliary turbines.

The tests at the above-mentioned outputs are to be combined together in working cycles which are to be repeated in succession for the entire duration within the limits indicated.

In particular, the full power test is to be carried out at the end of each cycle.

The partial load tests specified in (b) are to be carried out:
- along the nominal (theoretical) propeller curve and at constant speed, for propulsion turbines
- at constant speed, for turbines intended for generating sets.

In the case of prototype turbines, the duration and programme of the type test will be specially considered by the Society.

4.3.3 Alternatives

In cases of turbines for which the manufacturer submits documentary evidence proving successful service experience or results of previous bench tests, the Society may, at its discretion, allow a type test to be carried out, in the presence of the Surveyor according to a programme to be agreed upon in each instance.

4.3.4 Data to be recorded

During the type test, at least the following particulars are to be recorded:

a) ambient air temperature, pressure and atmospheric humidity in the test room

b) cooling medium temperature at the inlet of the turbine

c) characteristics of the fuel and lubricating oil used during the test

d) turbine speed

e) brake power

f) brake torque

g) intake and exhaust losses

h) lubricating oil pressure and temperature

i) exhaust gas temperature in locations of the flow gas path selected by the manufacturer

j) minimum starting air pressure and flow rate necessary to purge and start the turbine in cold condition, if applicable.

4.3.5 Inspection of main turbine components and evaluation of test results

The provisions of [4.2.4] and [4.2.5] are to be complied with, as far as applicable.

4.4 Material tests

4.4.1 The materials for the construction of the parts listed in Tab 3 are to be tested in compliance with the requirements of NR216.

Magnetic particle or liquid penetrant tests are required for the parts listed in Tab 3 and are to be effected by the Manufacturer in positions agreed upon by the Surveyor, where Manufacturer's experience shows defects are most likely to occur.

For important structural parts of the turbine, in addition to the above-mentioned non-destructive tests, examination of welded seams by approved methods of inspection may be required.

Where there are grounds to doubt the soundness of any turbine component, non-destructive tests using approved detecting methods may be required.

Table 3 : Material and non-destructive tests

Turbine component	Material tests (Mechanical properties and chemical composition)	Non-destructive tests	
		Magnetic particle or liquid penetrant	Ultrasonic or X Ray examination
Rotating parts (compressors and turbine rotors, shafts, stiff and flexible couplings, bolts for couplings and other dynamically stressed parts, integral pinions and gears)	all	all	all
Stationary parts (castings for casings intended for a temperature exceeding 230°C and plates for casings intended for a temperature exceeding 370°C or pressure exceeding 4 Mpa)	all	spot as agreed between the Manufacturer and the Surveyor	–
Blades	sample	sample	sample
Piping and associated fittings	as required in the appropriate Section of the Rules	as required in the appropriate Section of the Rules	as required in the appropriate Section of the Rules

4.5 Inspections and testing during construction

4.5.1 Inspections during construction

The following inspections and tests are to be carried out in the presence of a Surveyor during the construction of all turbines which are indicated in [1.1.1]. For on-board trials see Ch 1, Sec 11, [3.4].

- Material tests as required (see Ch 1, Sec 4, [4.1])
- Welding fabrication (see [4.5.2])
- Hydrostatic tests (see [4.5.3])
- Rotor balancing and overspeed test (see [4.5.4] and [4.5.5])
- Shop trials (See [4.5.6]).

4.5.2 Welding fabrication

Welding fabrication and testing is to be attended by the Surveyor, as may be deemed necessary by the Society.

4.5.3 Hydrostatic tests

Finished casing parts and heat exchangers are to be subjected to hydrostatic testing at 1,5 times the maximum permissible working pressure. If it is demonstrated by other means that the strength of casing parts is sufficient, a tightness test at 1,1 times the maximum permissible working pressure may be accepted by the Society. Where the hydrostatic test cannot be performed, alternative methods for verifying the integrity of the casings may be agreed between the manufacturer and the Society on a case by case basis.

4.5.4 Balancing of rotors

Finished rotors, complete with all fittings and blades, are to be dynamically balanced in a balancing machine of appropriate sensitivity in relation to the size of the rotor. Normally this test is to be carried out with the primary part of the flexible coupling, if any.

4.5.5 Overspeed test of rotors

Finished rotors, complete with all fittings and blades, are to be subjected for at least 3 minutes to an overspeed test at the greater of the following values:

- 5% above the setting speed of the overspeed tripping device
- 15% above the maximum design speed.

The Society may waive this requirement provided that it can be demonstrated by the manufacturer, using an acceptable direct calculation procedure, that the rotor is able to safely withstand the above overspeed values and that rotors are free from defects, as verified by means of non-destructive tests.

4.5.6 Shop trials

For shop trials, see [4.2.3] and [4.3.2].

4.6 Certification

4.6.1 Type approval certificate and its validity

Subject to the satisfactory outcome of the type tests and inspections specified in [4.2] or [4.3], the Society will issue to the engine manufacturer a “Type Approval Certificate” valid for all turbines of the same type.

4.6.2 Testing certification

a) Turbines admitted to an alternative inspection scheme

Works’ certificates (W) (see NR216, Ch 1, Sec 1, [4.2.3]) are required for components and tests indicated in Tab 3 and tests and trials listed in [4.5.1]. However, the Society reserves the right to request that the shop trials be witnessed by a Surveyor on a case by case basis.

b) Engines not admitted to an alternative inspection scheme

Society’s certificates (C) (see NR216, Ch 1, Sec 1, [4.2.1]) are required for material tests of rotating components and blades listed in Tab 3 and for works trials as per [4.5.3] and [4.5.4].

Works’ certificates (W) (see NR216, Ch 1, Sec 1, [4.2.3]) are required for the other items listed in Tab 3 and for trials described in [4.5.2], [4.5.5] and [4.5.6].

Section 6 Gearing

1 General

1.1 Application

1.1.1 Gearing systems installed onboard offshore units covered by the present Rules are to comply with relevant requirements of the Ship Rules related to design, construction, installation, certification, inspection and testing (see [1.1.2]).

1.1.2 References to the Ship Rules

The list of references to the applicable requirements of the Ship Rules is given in Tab 1.

Table 1 : Applicable requirements for gearing

Item No.	Requirement	Reference in the Ship Rules
1	Application	Pt C, Ch 1, Sec 6, [1.1]
2	Documentation to be submitted	Pt C, Ch 1, Sec 6, [1.2]
3	Design of gears, load capacity, tooth bending capacity	Pt C, Ch 1, Sec 6, [2] and Pt C, Ch 1, Sec 6, [3]
4	Design and construction	Pt C, Ch 1, Sec 6, [4]
5	Installation	Pt C, Ch 1, Sec 6, [5]
6	Certification, inspection and testing	Pt C, Ch 1, Sec 6, [6]

Section 7 Piping Systems

1 General

1.1 Application

1.1.1

a) General requirements applying to all piping systems are contained in Articles:
- Article [2] for their design and construction
- Article [3] for the welding of steel pipes
- Article [4] for the bending of pipes
- Article [5] for their arrangement and installation
- Article [20] for their certification, inspection and testing.

b) Specific requirements for unit piping systems and machinery piping systems are given in Articles [6] to [19].

c) For cooling systems, fuel oil systems, lubricating oil system and starting air systems serving propulsion plants of self-propelled units, refer to the applicable requirements of the Ship Rules.

d) In particular cases, such as units operating in restricted zones, the Society may accept attenuations to the provisions of this Section, on a case by case basis.

1.2 Documentation to be submitted

1.2.1 Documents

The documents listed in Tab 1 are to be submitted.

Table 1 : Documents to be submitted

No.	I/A **(1)**	Document **(2)**
1	A	Drawing showing the arrangement of the sea chests and valves located on the shell
2	A	Diagram of the bilge and ballast systems (in and outside machinery spaces)
3	A	Specification of the central priming system intended for bilge pumps, when provided
4	A	Diagram of the scuppers and sanitary discharge systems
5	A	Diagram of the air, sounding and overflow systems
6	A	Diagram of cooling systems (sea water and fresh water)
7	A	Diagram of fuel oil system
8	A	Drawings of the fuel oil tanks not forming part of the unit's structure
9	A	Diagram of the lubricating oil system
10	A	Diagram of the thermal oil system
11	A	Diagram of the hydraulic systems intended for essential services or located in machinery spaces
12	A	Diagram of steam system, including safety valve exhaust and drain pipes
13	A I	For high temperature steam pipes: • stress calculation note • drawing showing the actual arrangement of the piping in three dimensions
14	A	Diagram of the boiler feed water and condensate system
15	A	Diagram of the compressed air system
16	A	Diagram of the hydraulic and pneumatic remote control systems
17	A	Diagram of the remote level gauging system
18	A	Diagram of the exhaust gas system
19	A	Diagram of drip trays and gutterway draining system
20	A	Arrangement of the ventilation system
21	A	Diagram of the oxyacetylene welding system
22	A	Drawings and specification of valves and accessories, where required in [2.8]

(1) A = To be submitted for approval ; I = To be submitted for information
(2) Diagrams are also to include, where applicable, the (local and remote) control and monitoring systems and automation systems.

1.2.2 Additional information

The information listed in Tab 2 are also to be submitted.

Table 2 : Information to be submitted

No.	I/A (1)	Document
1	I	Nature, service temperature and pressure of the fluids
2	A	Material, external diameter and wall thickness of the pipes
3	A	Type of the connections between pipe lengths, including details of the weldings, where provided
4	A	Material, type and size of the accessories
5	A	Capacity, prime mover and, when requested, location of the pumps
6	A	For plastic pipes: • the chemical composition • the physical and mechanical characteristics in function of temperature • the characteristics of inflammability and fire resistance • the resistance to the products intended to be conveyed
(1) A = To be submitted for approval ; I = To be submitted for information		

1.3 Definitions

1.3.1 Piping and piping systems

a) Piping includes pipes and their connections, flexible hoses and expansion joints, valves and their actuating systems, other accessories (filters, level gauges, etc.) and pump casings.

b) Piping systems include piping and all the interfacing equipment such as tanks, pressure vessels, heat exchangers, pumps and centrifugal purifiers, but do not include boilers, turbines, internal combustion engines and reduction gears.

Note 1: The equipment other than piping is to be designed in accordance with the relevant Sections of Part C, Chapter 1.

1.3.2 Design pressure

a) The design pressure of a piping system is the pressure considered by the manufacturer to determine the scantling of the system components. It is not to be taken less than the maximum working pressure expected in this system or the highest setting pressure of any safety valve or relief device, whichever is the greater.

b) The design pressure of a boiler feed system is not to be less than 1,25 times the design pressure of the boiler or the maximum pressure expected in the feed piping, whichever is the greater.

c) The design pressure of steam piping located upstream of pressure reducing valves (high pressure side) is not to be less than the setting pressure of the boiler or superheater safety valves.

d) The design pressure of a piping system located on the low pressure side of a pressure reducing valve where no safety valve is provided is not to be less than the maximum pressure on the high pressure side of the pressure reducing valve.

e) The design pressure of a piping system located on the delivery side of a pump or a compressor is not to be less than the setting pressure of the safety valve for displacement pumps or the maximum pressure resulting from the operating (head-capacity) curve for centrifugal pumps, whichever is the greater.

1.3.3 Design temperature

The design temperature of a piping system is the maximum temperature of the medium inside the system.

1.3.4 Flammable oils

Flammable oils include fuel oils, lubricating oils, thermal oils and hydraulic oils.

1.4 Symbols and units

1.4.1 The following symbols and related units are commonly used in this Section. Additional symbols, related to some formulae indicated in this Section, are listed wherever it is necessary.

p : Design pressure, in MPa

T : Design temperature, in °C

t : Rule required minimum thickness, in mm

D : Pipe external diameter, in mm.

1.5 Class of piping systems

1.5.1 Purpose of the classes of piping systems

Piping systems are subdivided into three classes, denoted as class I, class II and class III, for the purpose of acceptance of materials, selection of joints, heat treatment, welding, pressure testing and the certification of fittings.

1.5.2 Definitions of the classes of piping systems

a) Classes I, II and III are defined in Tab 3.

b) The following systems are not covered by Tab 3:

- cargo piping for oil products, chemical products and liquefied gas
- fluids for refrigerating plants.

Table 3 : Class of piping systems

Media conveyed by the piping system	Class I	Class II **(1)** **(4)**	Class III **(7)**
Toxic media	without special safeguards **(3)**	not applicable	not applicable
Corrosive media	without special safeguards **(3)**	with special safeguards **(3)**	not applicable
Flammable media: • heated above flashpoint, or • having flashpoint < 60°C Hydrocarbon gas Liquefied gas	without special safeguards **(3)**	with special safeguards **(3)**	not applicable
Oxyacetylene	irrespective of p	not applicable	not applicable
Steam	p > 1,6 or T > 300	other **(2)**	p ≤ 0,7 and T ≤ 170
Thermal oil	p > 1,6 or T > 300	other **(2)**	p ≤ 0,7 and T ≤ 150
Fuel oil **(8)** Lubricating oil Flammable hydraulic oil **(5)**	p > 1,6 or T > 150	other **(2)**	p ≤ 0,7 and T ≤ 60
Other media **(5)** **(6)**	p > 4 or T > 300	other **(2)**	p ≤ 1,6 and T ≤ 200

(1) Valves under static pressure on oil fuel tanks or lubricating oil tanks belong to class II.
(2) Pressure and temperature conditions other than those required for class I and class III.
(3) Safeguards for reducing leakage possibility and limiting its consequences:
e.g. pipes led in positions where leakage of internal fluids will not cause a potential hazard or damage to surrounding areas which may include the use of pipe ducts, shielding, screening etc.
(4) Valves and fittings fitted on the unit's side and collision bulkhead belong to class II. See also [20.5.3], item b).
(5) Steering gear hydraulic piping system belongs to class I irrespective of p and T.
(6) Including water, air, gases, non-flammable hydraulic oil.
(7) The open ended pipes, irrespective of T, generally belong to class III (as drains, overflows, vents, exhaust gas lines, boiler escape pipes, etc.).
(8) Design pressure for fuel oil systems is to be determined in accordance with Tab 4.
Note 1: p : Design pressure, as defined in [1.3.2], in MPa.
Note 2: T : Design temperature, as defined in [1.3.3], in °C.
Note 3: Flammable media generally include the flammable liquids as oil fuel, lubricating oil, thermal oil and flammable hydraulic oil.

Table 4 : Definition of the design pressure for fuel oil systems

Working pressure P, in bar	Working temperature T, in °C	
	T ≤ 60	T > 60
P ≤ 7	3 bar or max. working pressure, whichever is the greater	3 bar or max. working pressure, whichever is the greater
P > 7	max. working pressure	14 bar or max. working pressure, whichever is the greater

2 General requirements for design and construction

2.1 Materials

2.1.1 General

Materials to be used in piping systems are to be suitable for the medium and the service for which the piping is intended.

2.1.2 Use of metallic materials

a) Metallic materials are to be used in accordance with Tab 5.

b) Materials for class I and class II piping systems are to be manufactured and tested in accordance with the appropriate requirements of NR216.

c) Materials for class III piping systems are to be manufactured and tested in accordance with the requirements of acceptable national or international standards or specifications.

d) Mechanical characteristics required for metallic materials are specified in NR216.

Table 5 : Conditions of use of metallic materials in piping systems

Material	Allowable classes	Maximum design temperature(**1**)	Particular conditions of use
Carbon and carbon-manganese steels	III, II, I	400 **(2)**	Class I and II pipes are to be seamless drawn pipes **(3)**
Copper and aluminium brass	III, II, I	200	• Not to be used in fuel oil systems, except for class III pipes of a diameter not exceeding 25 mm not passing through fuel oil tanks • Not to be used for boiler blow-down valves and pieces for connection to the shell plating **(4)**
Copper-nickel	III, II, I	300	
Special high temperature resistant bronze	III, II, I	260	
Stainless steel	III, II, I	300	Austenitic stainless steel is not to be used for sea water systems
Spheroidal graphite cast iron	III, II**(5)**	350	• Minimum elongation is not to be less than 12% on a gauge length of 5,65 $S^{0,5}$, where S is the actual cross-sectional area of the test piece • Not to be used for boiler blow-down valves and pieces for connection to the shell plating
Grey cast iron	III II **(6)**	220	Grey cast iron is not to be used for the following systems: • boiler blow-down systems and other piping systems subject to shocks, high stresses and vibrations • bilge lines in tanks • parts of scuppers and sanitary discharge systems located next to the hull below the freeboard deck • sea inlet and discharge valves and fittings • valves fitted on the collision bulkhead • valves fitted to fuel oil and lubricating oil tanks under static pressure head • class II fuel oil systems
Aluminium and aluminium alloys	III, II	200	Aluminium and aluminium alloys are not to be used on the following systems: • flammable oil systems • sounding and air pipes of fuel oil tanks • fire-extinguishing systems • bilge system in boiler or machinery spaces or in spaces containing fuel oil tanks or pumping units • scuppers and overboard discharges except for pipes led to the bottoms or to the shell above the freeboard deck or fitted at their upper end with closing means operated from a position above the freeboard deck • boiler blow-down valves and pieces for connection to the shell plating

(1) Maximum design temperature is not to exceed that assigned to the class of piping.

(2) Higher temperatures may be accepted if metallurgical behaviour and time dependent strength (ultimate tensile strength after 100 000 hours) are in accordance with national or international standards or specifications and if such values are guaranteed by the steel manufacturer.

(3) Pipes fabricated by a welding procedure approved by the Society may also be used.
Pipes having flash welded longitudinal seams are not to be used for oil fuel systems, for heating coils in oil tanks, nor for pressures exceeding 4 bar.
Where rimmed steel is used for pipes manufactured by electric resistance or induction welding processes, the design temperature is limited to 400°C.

(4) Pipes made of copper and copper alloys are to be seamless.

(5) Use of spheroidal cast iron for class I piping systems will be given special consideration by the Society.

(6) Use of grey cast iron is not allowed when the design pressure exceeds 1,3 MPa.

2.1.3 Use of plastics

a) Plastics may be used for piping systems belonging to class III in accordance with Ch 1, App 1. The use of plastics for other systems or in other conditions will be given special consideration.

b) Plastics intended for piping systems dealt with in this Section are to be of a type approved by the Society.

2.2 Thickness of pressure piping

2.2.1 Calculation of the thickness of pressure pipes

a) The thickness t, in mm, of pressure pipes is to be determined by the following formula but, in any case, is not to be less than the minimum thickness given in Tab 6 to Tab 9.

$$t = \frac{t_0 + b + c}{1 - \frac{a}{100}}$$

where:

t_0 : Coefficient, in mm, equal to:

$$t_0 = \frac{pD}{2Ke + p}$$

with:

p and D : As defined in [1.4.1]

K : Permissible stress defined in [2.2.2]

e : Weld efficiency factor to be:

- equal to 1 for seamless pipes and pipes fabricated according to a welding procedure approved by the Society
- specially considered by the Society for other welded pipes, depending on the service and the manufacture procedure.

b : Thickness reduction due to bending defined in [2.2.3], in mm

c : Corrosion allowance defined in [2.2.4], in mm

a : Negative manufacturing tolerance percentage:

- equal to 10 for copper and copper alloy pipes, cold drawn seamless steel pipes and steel pipes fabricated according to a welding procedure approved by the Society
- equal to 12,5 for hot laminated seamless steel pipes
- subject to special consideration by the Society in other cases.

b) The thickness thus determined does not take into account the particular loads to which pipes may be subjected. Attention is to be drawn in particular to the case of high temperature and low temperature pipes.

2.2.2 Permissible stress

a) The permissible stress K is given:

- in Tab 10 for carbon and carbon-manganese steel pipes
- in Tab 11 for alloy steel pipes, and
- in Tab 12 for copper and copper alloy pipes,

as a function of the temperature. Intermediate values may be obtained by interpolation.

b) Where, for carbon steel and alloy steel pipes, the value of the permissible stress K is not given in Tab 10 or Tab 11, it is to be taken equal to the lowest of the following values:

$$\frac{R_{m,20}}{2,7} \qquad \frac{R_e}{A} \qquad \frac{S_R}{A} \qquad S$$

where:

$R_{m,20}$: Minimum tensile strength of the material at ambient temperature (20°C), in N/mm²

R_e : Minimum yield strength or 0,2% proof stress at the design temperature, in N/mm²

S_R : Average stress to produce rupture in 100000 h at design temperature, in N/mm²

S : Average stress to produce 1% creep in 100000 h at design temperature, in N/mm²

A : Safety factor to be taken equal to:

- 1,6 when R_e and S_R values result from tests attended by the Society
- 1,8 otherwise.

c) The permissible stress values adopted for materials other than carbon steel, alloy steel, copper and copper alloy will be specially considered by the Society.

Table 6 : Minimum wall thickness for steel pipes

External diameter (mm)	Minimum nominal wall thickness (mm)			Minimum reinforced wall thickness (mm) **(2)**	Minimum extra-reinforced wall thickness (mm) **(3)**
	Pipes in general **(1)**	Vent, overflow and sounding pipes for integral tanks **(1) (5)**	Sea water pipes, bilge and ballast systems **(1) (4)**		
10,2 - 12,0	1,6	–	–	–	–
13,5 - 19,3	1,8	–	–	–	–
20,0	2,0	–	–	–	–
21,3 - 25,0	2,0	–	3,2	–	–
26,9 - 33,7	2,0	–	3,2	–	–
38,0 - 44,5	2,0	4,5	3,6	6,3	7,6
48,3	2,3	4,5	3,6	6,3	7,6
51,0 - 63,5	2,3	4,5	4,0	6,3	7,6
70,0	2,6	4,5	4,0	6,3	7,6
76,1 - 82,5	2,6	4,5	4,5	6,3	7,6
88,9 - 108,0	2,9	4,5	4,5	7,1	7,8
114,3 - 127,0	3,2	4,5	4,5	8,0	8,8
133,0 - 139,7	3,6	4,5	4,5	8,0	9,5
152,4 - 168,3	4,0	4,5	4,5	8,8	11,0
177,8	4,5	5,0	5,0	8,8	12,7
193,7	4,5	5,4	5,4	8,8	12,7
219,1	4,5	5,9	5,9	8,8	12,7
244,5 - 273,0	5,0	6,3	6,3	8,8	12,7
298,5 - 368,0	5,6	6,3	6,3	8,8	12,7
406,4 - 457,2	6,3	6,3	6,3	8,8	12,7

(1) Attention is drawn to the special requirements regarding:
- bilge and ballast systems
- scupper and discharge pipes
- sounding, air and overflow pipes
- ventilation systems
- oxyacetylene welding systems
- CO_2 fire-extinguishing systems (see Ch 4, Sec 11)
- cargo lines (see Pt D, Ch 10, Sec 3 of the Ship Rules). The wall thickness is to be subject to special consideration by the Society.

(2) Reinforced wall thickness applies to pipes passing through tanks containing a fluid distinct from that conveyed by the pipe.

(3) Extra-reinforced wall thickness applies to pipes connected to the shell below the freeboard deck.

(4) The minimum wall thickness for bilge lines and ballast lines through deep tanks is to be subject to special consideration by the Society. The ballast lines within oil cargo tanks (where permitted) is to be subject to special consideration by the Society (see Pt D, Ch 1, Sec 18, [2.1.2]).

(5) For sounding pipes, except those for flammable cargoes, the minimum wall thickness is intended to apply only to the part outside the tank.

Note 1: A different thickness may be considered by the Society on a case by case basis, provided that it complies with recognised standards.

Note 2: For pipes efficiently protected against corrosion, the thickness may be reduced by an amount up to 1 mm.

Note 3: The thickness of threaded pipes is to be measured at the bottom of the thread.

Note 4: The minimum thickness listed in this table is the nominal wall thickness and no allowance is required for negative tolerance and reduction in thickness due to bending.

Note 5: For nominal diameters ND > 450 mm, the minimum wall thickness is to be in accordance with a national or an international standard, but is not to be less than the minimum wall thickness of the appropriate column indicated for 450 mm pipe size.

Note 6: Exhaust gas pipe minimum wall thickness is to be subject to special consideration by the Society.

Table 7 : Minimum wall thickness for copper and copper alloy pipes

External diameter (mm)	Minimum wall thickness (mm)	
	Copper	Copper alloy
8 - 10	1,0	0,8
12 - 20	1,2	1,0
25 - 44,5	1,5	1,2
50 - 76,1	2,0	1,5
88,9 - 108	2,5	2,0
133 - 159	3,0	2,5
193,7 - 267	3,5	3,0
273 - 457,2	4,0	3,5
470	4,0	3,5
508	4,5	4,0
Note 1: A different thickness may be considered by the Society on a case by case basis, provided that it complies with recognised standards.		

Table 8 : Minimum wall thickness for austenitic stainless steel pipes

External diameter (mm)	Minimum wall thickness (mm)
10,2 to 17,2	1,0
21,3 to 48,3	1,6
60,3 to 88,9	2,0
114,3 to 168,3	2,3
219,1	2,6
273,0	2,9
323,9 to 406,4	3,6
over 406,4	4,0
Note 1: Diameters and thicknesses according to national or international standards may be accepted.	

Table 9 : Minimum wall thickness for aluminium and aluminium alloy pipes

External diameter (mm)	Minimum wall thickness (mm)
0 - 10	1,5
12 - 38	2,0
43 - 57	2,5
76 - 89	3,0
108 - 133	4,0
159 - 194	4,5
219 - 273	5,0
above 273	5,5
Note 1: A different thickness may be considered by the Society on a case by case basis, provided that it complies with recognised standards. **Note 2:** For sea water pipes, the minimum thickness is not to be less than 5 mm.	

Table 10 : Permissible stresses for carbon and carbon-manganese steel pipes

Specified minimum tensile strength (N/mm²)	Design temperature (°C)												
	≤50	100	150	200	250	300	350	400	410	420	430	440	450
320	107	105	99	92	78	62	57	55	55	54	54	54	49
360	120	117	110	103	91	76	69	68	68	68	64	56	49
410	136	131	124	117	106	93	86	84	79	71	64	56	49
460	151	146	139	132	122	111	101	99	98	85	73	62	53
490	160	156	148	141	131	121	111	109	98	85	73	62	53

Table 11 : Permissible stresses for alloy steel pipes

Type of steel	Specified minimum tensile strength (N/mm²)	Design temperature (°C)									
		≤50	100	200	300	350	400	440	450	460	470
1Cr1/2Mo	440	159	150	137	114	106	102	101	101	100	99
2 1/4Cr1Mo annealed	410	76	67	57	50	47	45	44	43	43	44
2 1/4Cr1Mo normalised and tempered below 750°C	490	167	163	153	144	140	136	130	128	127	116
2 1/4Cr1Mo normalised and tempered above 750°C	490	167	163	153	144	140	136	130	122	114	105
1/2Cr 1/2Mo 1/4V	460	166	162	147	120	115	111	106	105	103	102

Type of steel	Specified minimum tensile strength (N/mm²)	Design temperature (°C)									
		480	490	500	510	520	530	540	550	560	570
1Cr1/2Mo	440	98	97	91	76	62	51	42	34	27	22
2 1/4Cr1Mo annealed	410	42	42	41	41	41	40	40	40	37	32
2 1/4Cr1Mo normalised and tempered below 750°C	490	106	96	86	79	67	58	49	43	37	32
2 1/4Cr1Mo normalised and tempered above 750°C	490	96	88	79	72	64	56	49	43	37	32
1/2Cr 1/2Mo 1/4V	460	101	99	97	94	82	72	62	53	45	37

Table 12 : Permissible stresses for copper and copper alloy pipes

Material (annealed)	Specified minimum tensile strength (N/mm²)	Design temperature (°C)										
		≤50	75	100	125	150	175	200	225	250	275	300
Copper	215	41	41	40	40	34	27,5	18,5				
Aluminium brass	325	78	78	78	78	78	51	24,5				
Copper-nickel 95/5 and 90/10	275	68	68	67	65,5	64	62	59	56	52	48	44
Copper-nickel 70/30	365	81	79	77	75	73	71	69	67	65,5	64	62

2.2.3 Thickness reduction due to bending

a) Unless otherwise justified, the thickness reduction b due to bending is to be determined by the following formula:

$$b = \frac{Dt_0}{2,5\rho}$$

where:

ρ : Bending radius measured on the centre line of the pipe, in mm

D : As defined in [1.4.1]

t_0 : As defined in [2.2.1].

b) When the bending radius is not given, the thickness reduction is to be taken equal to:

$$\frac{t_0}{10}$$

c) For straight pipes, the thickness reduction is to be taken equal to 0.

2.2.4 Corrosion allowance

The values of corrosion allowance c are given for steel pipes in Tab 13 and for non-ferrous metallic pipes in Tab 14.

Table 13 : Corrosion allowance for steel pipes

Piping system	Corrosion allowance (mm)
Superheated steam	0,3
Saturated steam	0,8
Steam coils in cargo tanks and liquid fuel tanks	2,0
Feed water for boilers in open circuit systems	1,5
Feed water for boilers in closed circuit systems	0,5
Blow-down systems for boilers	1,5
Compressed air	1,0
Hydraulic oil	0,3
Lubricating oil	0,3
Fuel oil	1,0
Thermal oil	1,0
Fresh water	0,8
Sea water	3,0
Refrigerants referred to in Ch 1, Sec 9	0,3
Cargo systems for floating production storage and offloading units	2,0
Note 1: For pipes passing through tanks, an additional corrosion allowance is to be considered in order to account for the external corrosion. **Note 2:** The corrosion allowance of pipes efficiently protected against corrosion may be reduced by no more than 50%. **Note 3:** When the corrosion resistance of alloy steels is adequately demonstrated, the corrosion allowance may be disregarded.	

Table 14 : Corrosion allowance for non-ferrous metal pipes

Piping material **(1)**	Corrosion allowance (mm) **(2)**
Copper	0,8
Brass	0,8
Copper-tin alloys	0,8
Copper-nickel alloys with less than 10% of Ni	0,8
Copper-nickel alloys with at least 10% of Ni	0,5
Aluminium and aluminium alloys	0,5
(1) The corrosion allowance for other materials will be specially considered by the Society. Where their resistance to corrosion is adequately demonstrated, the corrosion allowance may be disregarded. **(2)** In cases of media with high corrosive action, a higher corrosion allowance may be required by the Society.	

2.2.5 Tees

As well as complying with the provisions of [2.2.1] to [2.2.4], the thickness t_T of pipes on which a branch is welded to form a Tee is not to be less than that given by the following formula:

$$t_T = \left(1 + \frac{D_1}{D}\right) t_0$$

where:

D_1 : External diameter of the branch pipe

D : As defined in [1.4.1]

t_0 : As defined in [2.2.1].

Note 1: This requirement may be dispensed with for Tees provided with a reinforcement or extruded.

2.3 Toughness of carbon steels

2.3.1 Whichever the standard used, the carbon steel toughness is to comply with Tab 15.

Table 15 : Toughness test temperatures for carbon steels, in °C

Minimum service temperature T (°C)	Wall thickness e (mm)					
	e ≤ 6,2	6,2 < e ≤ 12,6	12,6 < e ≤ 25,4	25,4 < e ≤ 38	38 < e ≤ 50,8	50,8 < e
30 < T	NR	NR	NR	NR	NR	Special study to be performed
20 < T ≤ 30	NR	NR	20	20	20	
10 < T ≤ 20	NR	NR	0	0	0	
0 < T ≤ 10	NR	NR	0	–10	–10	
–10 < T ≤ 0	NR	20	0	–20	–20	
–20 < T ≤ –10	NR	0	–10	–20	–20	
–30 < T ≤ –20	NR	0	–20	–30	–30	
T ≤ –30	Special study to be performed					

Note 1: NR = not required.
Note 2: The Table is valid for:
- Charpy V-notch test (longitudinal direction) on piping materials and welds with minimum impact energy 34 J average and 22 J minimum on samples 10 mm x 10 mm
- carbon steels with yield strength not more than 420 MPa.

Note 3: The test temperatures may be 10°C higher for post weld heat treated welds.
Note 4: The service temperature T is the lowest temperature to which the pipe may be submitted in service, depending upon the ambient temperature (water or air) and upon the fluid temperature.

2.4 Calculation of high temperature pipes

2.4.1 General

For steam piping having a design temperature exceeding 400°C, calculations are to be submitted to the Society concerning the stresses due to internal pressure, piping weight and any other external load, and to thermal expansion, for all cases of actual operation and for all lengths of piping.

The calculations are to include, in particular:

- the components, along the three principal axes, of the forces and moments acting on each branch of piping
- the components of the displacements and rotations causing the above forces and moments
- all parameters necessary for the computation of forces, moments and stresses
- an isometric sketch of the pipes showing the main geometrical characteristics of the various pipes lines (diameter, thickness, curvature, etc.), the identification and type of the support, and the coordinates of the typical points considered.

In way of bends, the calculations are to be carried out taking into account, where necessary, the pipe ovalisation and its effects on flexibility and stress increase.

A certain amount of cold springing, calculated on the basis of expected thermal expansion, is to be applied to the piping during installation. Such springing is to be neglected in stress calculations; it may, however, be taken into account in terms of its effect on thrusts on turbines and other parts.

2.4.2 Thermal stress

The combined stress σ_{ID}, in N/mm², due to thermal expansion, calculated by the following formula:

$$\sigma_{ID} = (\sigma^2 + 4\ \tau^2)^{0,5}$$

is to be such as to satisfy the following equation:

$$\sigma_{ID} \leq 0,75\ K_{20} + 0,25\ K_T$$

where:

σ : Value of the longitudinal stress due to bending moments caused by thermal expansion, increased, if necessary, by adequate factors for bends, in N/mm²; in general it is not necessary to take account of the effect of axial force

τ : Value of the tangential stress due to torque caused by thermal expansion, in N/mm²; in general it is not necessary to take account of the effect of shear force

K_{20} : Value of the permissible stress for the material employed, calculated according to [2.2.2], for a temperature of 20°C, in N/mm²

K_T : Value of the permissible stress for the material employed, calculated according to [2.2.2], for the design temperature T, in N/mm².

2.4.3 Longitudinal stresses

The sum of longitudinal stresses σ_L, in N/mm², due to pressure, piping weight and any other external loads is to be such as to satisfy the following equation:

$\sigma_L \leq K_T$

where K_T is defined in [2.4.2].

2.4.4 Alternative limits for permissible stresses

Alternative limits for permissible stresses may be considered by the Society in special cases or when calculations have been carried out following a procedure based on hypotheses other than those considered above.

2.5 Junction of pipes

2.5.1 General

a) The junctions between metallic pipe lengths or between metallic pipe lengths and fittings are to be made by:

- direct welding (butt-weld, socket-weld)
- bolted flanges (welded-on or screwed-on)
- threaded sleeve joints, or
- mechanical joints (see [2.5.5]).

The joints are to comply with a recognised standard or to be of a design proven to be suitable for the intended purpose and acceptable to the Society. See also [2.1.2].

The expression "mechanical joints" means devices intended for direct connection of pipe lengths other than by welding, flanges or threaded joints described in [2.4.2], [2.4.3] and [2.4.4].

b) The number of joints in flammable oil piping systems is to be kept to the minimum necessary for mounting and dismantling purposes.

c) The gaskets and packings used for the joints are to suit the design pressure, the design temperature and the nature of the fluids conveyed.

d) The junction between plastic pipes is to comply with Ch 1, App 1.

2.5.2 Welded metallic joints

a) Welded joints are to be used in accordance with Tab 16. Welding and non-destructive testing of welds are to be carried out in accordance with Article [3].

b) Butt-welded joints are to be of full penetration type, with or without special provision for a high quality of root side.

The expression "special provision for a high quality of root side" means that butt welds were accomplished as double welded or by use of a backing ring or inert gas back-up on first pass, or other similar methods accepted by the Society.

c) Slip-on sleeve and socket welded joints are to have sleeves, sockets and weldments of adequate dimensions in compliance with a standard recognised by the Society.

2.5.3 Metallic flange connections

a) In general, the metallic flange connections used for piping systems are to be in compliance with a standard recognised by the Society.

b) The material used for flanges and gaskets is to be suitable for the nature and temperature of the fluid, as well as pipes on which the flanges are to be fitted.

c) The dimensions and configuration of flanges and bolts are to be chosen in accordance with recognised standard intended for design pressure and design temperature of the piping system. Otherwise, the flange connections are subject to special consideration.

d) Flanges are to be attached to the pipes by welding or screwing. Examples of acceptable metallic flange connections are shown in Fig 1. However, other types of flange connections may be also considered by the Society in each particular case, provided that they are in accordance with national or international standards applicable to the piping system and recognise the boundary fluids, design pressure and temperature conditions, external or cyclic loading and location.

e) Permitted applications are indicated in Tab 17.

Table 16 : Use of welded and threaded metallic joints in piping systems

Joints	Permitted classes of piping	Restrictions of use
Butt-welded, with special provision for a high quality of root side **(1)**	III, II, I	no restrictions
Butt-welded, without special provision for a high quality of root side **(1)**	III, II	no restrictions
Slip-on sleeve and socket welded **(2)**	III	no restrictions
Threaded sleeve joints with tapered thread **(3)**	I	not allowed for: • pipes with outside diameter of more than 33,7 mm • pipes inside tanks • piping systems conveying toxic or flammable media or services where fatigue, severe erosion or crevice corrosion is expected to occur **(4)**
	III, II	not allowed for: • pipes with outside diameter of more than 60,3 mm • pipes inside tanks • piping systems conveying toxic or flammable media or services where fatigue, severe erosion or crevice corrosion is expected to occur **(4)**
Threaded sleeve joints with parallel thread and tightening suitable for intended design conditions **(3)**	III	not allowed for: • pipes with outside diameter of more than 60,3 mm • pipes inside tanks • piping systems conveying toxic or flammable media or services where fatigue, severe erosion or crevice corrosion is expected to occur **(4)**

(1) For expression "special provision for a high quality of root side" see [2.5.2] b).
(2) Particular cases may be allowed by the Society for piping systems of Class I and II having outside diameter ≤ 88,9 mm except for piping systems conveying toxic media or services where fatigue, severe erosion or crevice corrosion is expected to occur.
(3) In particular cases, sizes in excess of those mentioned above may be accepted by the Society if found in compliance with a recognised national and/or international standard.
(4) May be accepted for accessory lines and instrumentation lines with external diameters up to 25 mm.
Note 1: Other applications will be specially considered by the Society.

Table 17 : Use of metallic flange connections in piping systems (types as shown in Fig 1)

Type of media conveyed	Class of piping (see Tab 3)		
	I	II	III
Toxic or corrosive media Flammable media (where heated above flashpoint or having flashpoint < 60°C) Liquefied gases	A1, A2, B1, B2, B3 **(1) (2) (4)**	A1, A2, B1, B2, B3, C1, C2, C3 **(1) (4)**	not applicable
Fuel oil Lubricating oil	A1, A2, B1, B2, B3	A1, A2, B1, B2, B3, C1, C2, C3	A1, A2, B1, B2, B3, C1, C2, C3, E2
Steam Thermal oil	A1, A2, B1, B2, B3 **(2) (3)**	A1, A2, B1, B2, B3, C1, C2, C3, D, E2 **(6)**	A1, A2, B1, B2, B3, C1, C2, C3, D, E2
Other media as water, air, gases (refrigerants), non-flammable hydraulic oil, etc.	A1, A2, B1, B2, B3 **(3)**	A1, A2, B1, B2, B3, C1, C2, C3, D, E2 **(6)**	A1, A2, B1, B2, B3, C1, C2, C3, D, E1, E2 **(5) (6) (7)**

(1) When design pressure p (see [1.3.2]) exceeds 1 MPa, types A1 and A2 only.
(2) For nominal diameter ND ≥ 150 mm, types A1 and A2 only.
(3) When design temperature T (see [1.3.3] exceeds 400°C, types A1 and A2 only.
(4) For cargo piping of chemical products, IBC Code Ch. 5, 5.3 is to be applied. For cargo piping of gas products, IGC Code Ch. 5, 5.4 is to be applied.
(5) Type E2 only, for design pressure p ≤ 1,6 Mpa and design temperature T ≤ 150°C.
(6) Types D and E1 only, for design temperature T ≤ 250°C.
(7) Type E1 only, for water pipelines and for open ended lines (e.g. drain, overflow, air vent piping, etc.).

Figure 1 : Examples of metallic flange connections

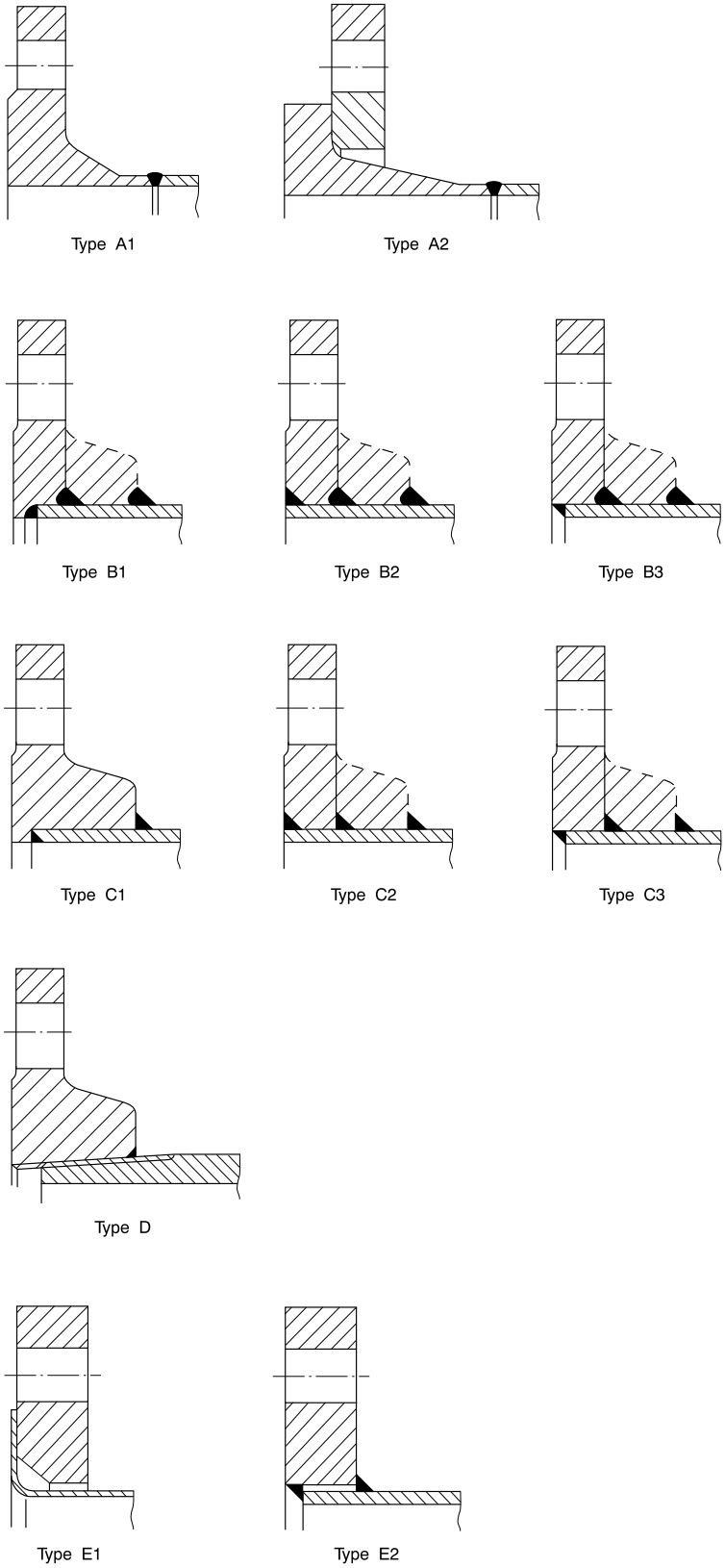

Note 1: For type D, the pipe and flange are to be screwed with a tapered thread and the diameter of the screw portion of the pipe over the thread is not to be appreciably less than the outside diameter of the unthreaded pipe. For certain types of thread, after the flange has been screwed hard home, the pipe is to be expanded into the flange.

Note 2: The leg length of the fillet weld, as well as the dimension of the groove penetration in the flange, is to be in general equal to 1,5 times the pipe thickness but not less than 5 mm.

2.5.4 Slip-on threaded joints

a) Slip-on threaded joints having pipe threads where pressure-tight joints are made on the threads with parallel or tapered threads are to comply with requirements of a recognised national or international standard and are to be acceptable to the Society.

b) Slip-on threaded joints may be used for piping systems in accordance with Tab 16.

c) Threaded joints may be accepted also in CO_2 piping systems, provided that they are used only inside protected spaces and in CO_2 cylinder rooms.

2.5.5 Mechanical joints

Due to the great variations in design and configuration of mechanical joints, specific recommendation regarding calculation method for theoretical strength calculations is not specified. The Type Approval is to be based on the results of testing of the actual joints.

Below specified requirements are applicable to pipe unions, compression couplings, slip-on joints as shown in Fig 2. Similar joints complying with these requirements may be acceptable.

a) The application and pressure ratings of different mechanical joints are to be approved by the Society. The approval is to be based on the Type Approval procedure given in Ch 1, App 3 including pipe unions, compression couplings, slip-on joints and similar joints are to be of approved type for the service conditions and the intended application.

b) Where the application of mechanical joints results in reduction in pipe wall thickness due to the use of bite type rings or other structural elements, this is to be taken into account in determining the minimum wall thickness of the pipe to withstand the design pressure.

c) Construction of mechanical joints is to prevent the possibility of tightness failure affected by pressure pulsation, piping vibration, temperature variation and other similar adverse effects occurring during operation on board.

d) Material of mechanical joints is to be compatible with the piping material and internal and external media.

e) As far as applicable, the mechanical joints are to be tested to a burst pressure of 4 times the design pressure. For design pressures above 200 bar the required burst pressure is to be specially considered by the Society.

f) In general, mechanical joints are to be of fire resistant type as required by Tab 18.

g) Mechanical joints, which in the event of damage could cause fire or flooding, are not to be used in piping sections directly connected to the shell openings or tanks containing flammable fluids.

h) The mechanical joints are to be designed to withstand internal and external pressure as applicable and, where used in suction lines, are to be capable of operating under vacuum.

i) The number of mechanical joints in flammable liquid systems is to be kept to a minimum. In general, flanged joints conforming to recognised standards are to be used.

j) Piping in which a mechanical joint is fitted is to be adequately adjusted, aligned and supported. Supports or hangers are not to be used to force alignment of piping at the point of connection.

k) Slip-on joints are not to be used in pipelines in cargo holds, tanks, and other spaces which are not easily accessible, unless approved by the Society. Application of these joints inside tanks may be permitted only for the same media that is in the tanks. Unrestrained slip-on joints are to be used only in cases where compensation of lateral pipe deformation is necessary. Usage of these joints as the main means of pipe connection is not permitted.

l) Application of mechanical joints and their acceptable use for each service is indicated in Tab 18; dependence upon the class of piping, pipe dimensions, working pressure and temperature is indicated in Tab 19.

m) In some particular cases, sizes in excess of those mentioned above may be accepted by the Society if they are in compliance with a recognised national and/or international standard.

n) Application of various mechanical joints may be accepted as indicated by Tab 18. However, in all cases, acceptance of the joint type is to be subject to approval for the intended application, and subject to conditions of the approval and applicable Rules.

o) Mechanical joints are to be tested in accordance with a program approved by the Society, which is to include at least the following:

   1) leakage test
   2) vacuum test (where necessary)
   3) vibration (fatigue) test
   4) fire endurance test (where necessary)
   5) burst pressure test
   6) pressure pulsation test (where necessary)
   7) assembly test (where necessary)
   8) pull out test (where necessary).

p) The installation of mechanical joints is to be in accordance with the manufacturer's assembly instructions. Where special tools and gauges are required for installation of the joints, these are to be supplied by the manufacturer.

Figure 2 : Examples of mechanical joints

Pipe Unions

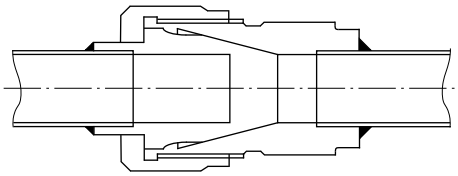

Welded and brazed types

Compression Couplings

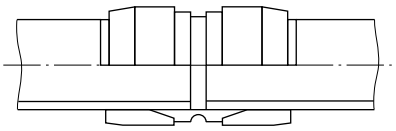

Swage type

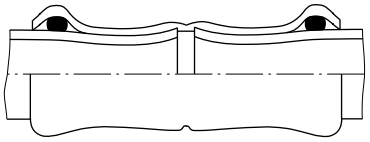

Press type

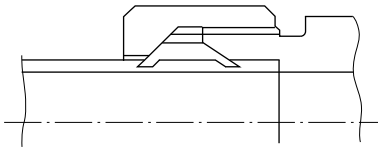

Bite type

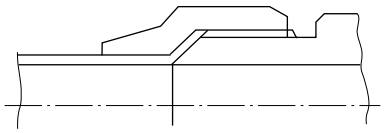

Flared type

Slip-on Joints

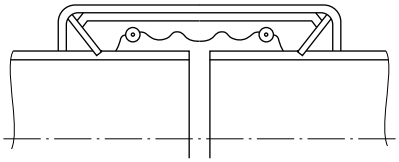

Grip type

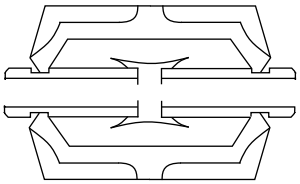

Machine grooved type

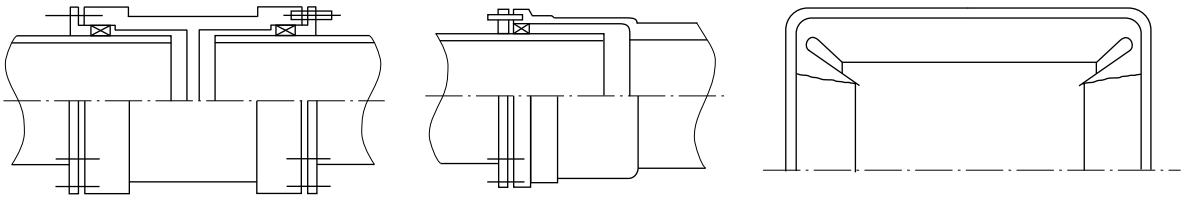

Slip types

Table 18 : Application of mechanical joints

Systems		Kind of connections		
		Pipe unions	Compression couplings**(6)**	Slip-on joints
Flammable fluids (flash point ≤ 60°C)				
1	Cargo oil lines	+	+	+ **(5)**
2	Crude oil washing lines	+	+	+ **(5)**
3	Vent lines	+	+	+ **(3)**
Inert gas				
4	Water seal effluent lines	+	+	+
5	Scrubber effluent lines	+	+	+
6	Main lines	+	+	+ **(2)(5)**
7	Distribution lines	+	+	+ **(5)**
Flammable fluids (flash point > 60°C)				
8	Cargo oil lines	+	+	+ **(5)**
9	Fuel oil lines	+	+	+ **(2)(3)**
10	Lubricating oil lines	+	+	+ **(2)(3)**
11	Hydraulic oil	+	+	+ **(2)(3)**
12	Thermal oil	+	+	+ **(2)(3)**
Sea water				
13	Bilge lines	+	+	+ **(1)**
14	Fire main and water spray	+	+	+ **(3)**
15	Foam system	+	+	+ **(3)**
16	Sprinkler system	+	+	+ **(3)**
17	Ballast system	+	+	+ **(1)**
18	Cooling water system	+	+	+ **(1)**
19	Tank cleaning services	+	+	+
20	Non-essential systems	+	+	+
Fresh water				
21	Cooling water system	+	+	+ **(1)**
22	Condensate return	+	+	+ **(1)**
23	Non-essential systems	+	+	+
Sanitary/Drains/Scuppers				
24	Deck drains (internal)	+	+	+ **(4)**
25	Sanitary drains	+	+	+
26	Scuppers and discharge (overboard)	+	+	–
Sounding/Vent				
27	Water tanks/Dry spaces	+	+	+
28	Oil tanks (flash point > 60°C)	+	+	+ **(2)(3)**
Miscellaneous				
29	Starting/Control air **(1)**	+	+	–
30	Service air (non-essential)	+	+	+
31	Brine	+	+	+
32	CO_2 system **(1)**	+	+	–
33	Steam	+	+	+ **(7)**

Note 1:

+ : Application is allowed

– : Application is not allowed.

(1) Inside machinery spaces of category A - only approved fire resistant types.

(2) Not inside machinery spaces of category A or accommodation spaces. May be accepted in other machinery spaces provided the joints are located in easily visible and accessible positions.

(3) Approved fire resistant types.

(4) Above free board deck only.

(5) In pump rooms and open decks - only approved fire resistant types.

(6) If compression couplings include any components which readily deteriorate in case of fire, they are to be of approved fire resistant type as required for Slip-on joints.

(7) Restrained slip-on joints (which are provided with stopping bolts for axially restraining the coupling from pull-out) may be accepted in steam lines on open decks with a design pressure of 10 bar or less, provided that the associated pipes are suitably supported and anchored.

Table 19 : Application of mechanical joints depending upon the class of piping

Types of joints	Classes of piping systems		
	Class I	Class II	Class III
Pipe Unions			
Welded and brazed types	+ (OD ≤ 60,3 mm)	+ (OD ≤ 60,3 mm)	+
Compression Couplings			
Swage type	+	+	+
Bite type Flared type	+ (OD ≤ 60,3 mm) + (OD ≤ 60,3 mm)	+ (OD ≤ 60,3 mm) + (OD ≤ 60,3 mm)	+ +
Press type	–	–	+
Slip-on Joints			
Machine grooved type	+	+	+
Grip type	–	+	+
Slip type	–	+	+
Note 1: (+) Application is allowed, (–) Application is not allowed.			

2.6 Protection against overpressure

2.6.1 General

a) These requirements deal with the protection of piping systems against overpressure, with the exception of heat exchangers and pressure vessels, which are dealt with in Ch 1, Sec 3, [2.4].

b) Safety valves are to be sealed after setting.

2.6.2 Protection of flammable oil systems

Provisions shall be made to prevent overpressure in any flammable oil tank or in any part of the flammable oil systems, including the filling lines served by pumps on board.

2.6.3 Protection of pump and compressor discharges

a) Provisions are to be made so that the discharge pressure of pumps and compressors cannot exceed the pressure for which the pipes located on the discharge of these pumps and compressors are designed.

b) When provided on the pump discharge for this purpose, safety valves are to lead back to the pump suction or to any other suitable place.

c) The discharge capacity of the safety valves installed on pumps and compressors is to be such that the pressure at the discharge side cannot exceed by more than 10% the design pressure of the discharge pipe in the event of operation with closed discharge.

2.6.4 Protection of pipes

a) Pipes likely to be subjected to a pressure exceeding their normal working pressure are to be provided with safety valves or equivalent overpressure protecting devices.

b) In particular, pipes located on the low pressure side of pressure reducing valves are to be provided with safety valves unless they are designed for the maximum pressure on the high pressure side of the pressure reducing valve. See also [1.3.2] and [2.10.1].

c) The discharge capacity of the devices fitted on pipes for preventing overpressure is to be such that the pressure in these pipes cannot exceed the design pressure by more than 10%.

2.7 Flexible hoses and expansion joints

2.7.1 General

a) Definitions:

- Flexible hose assembly: short length of metallic or non-metallic hose normally with prefabricated end fittings ready for installation
- Expansion joint: an assembly designed to safely absorb the heat-induced expansion and contraction, to allow relative movement between pipes and the ship's structure as required in [5.7].

b) Flexible hoses and expansion joints are to be of a type approved by the Society. Unless otherwise specified, they are to comply with the requirements of this sub-article.

c) The requirements of this sub-article apply to flexible hoses and expansion joints of metallic or non-metallic material intended for a permanent connection between a fixed piping system and items of machinery. The requirements may also be applied to temporarily connected flexible hoses or hoses of portable equipment.

d) Unless otherwise specified, the requirements of this sub-article do not apply for flexible hose assemblies and expansion joints intended to be used in fire extinguishing systems.

e) Flexible hose assemblies and expansion joints intended for piping systems with a design temperature below the ambient temperature are subject to special consideration by the Society.

f) Specific requirements for flexible hoses and expansion joints intended for cargo pipe lines are given in:
- Pt D, Ch 1, Sec 18 for flexible hoses and expansion joints fitted in produced oil and process piping
- NR542 for flexible hoses and expansion joints intended for liquefied gas
- IMO IBC Code for flexible hoses and expansion joints intended for chemical products.

2.7.2 General conditions of use applicable to flexible hoses and expansion joints

a) Unless otherwise specified, the Society may permit the use of flexible hoses and expansion joints, made of both metallic and non-metallic materials, provided they are approved for the intended service. They may be accepted for use in oil fuel, lubricating, hydraulic and thermal oil systems, fresh water and sea water cooling systems, compressed air systems, bilge and ballast systems, Class III steam systems and exhaust gas systems where they comply with the requirements of this sub-article.

b) For steam systems, the flexible hose assemblies and expansion joints are to be of metallic construction.

c) The position of flexible hose assemblies and expansion joints is to be clearly shown on the drawings listed in [1.2.1] and [1.2.2] when submitted to the Society.

d) A flexible hose assembly or an expansion joint is to be selected for the intended location and application taking into consideration ambient conditions, compatibility with fluids under working pressure and temperature conditions consistent with the manufacturer's instructions and any requirements of the Society.

e) The arrangement and installation of the flexible hose assemblies and expansion joints are also to comply with [5.10.3].

2.7.3 Specific conditions of use applicable to flexible hoses

a) Flexible hose assembly is not accepted in high pressure fuel oil injection systems.

b) Flexible hose assemblies for essential services or containing either flammable or toxic media are not to exceed 1,5 m in length.

2.7.4 General requirements for the design of flexible hoses and expansion joints

a) Flexible hoses and expansion joints are to be designed and constructed in accordance with recognised National or International standards acceptable to the Society.

b) Acceptance of a flexible hose assembly or an expansion joint is subject to satisfactory prototype testing in accordance with the provisions of [20.2].

c) The material, design and construction are to be at least suitable for:
- marine environment and external contact with hydrocarbons
- internal contact and resistance to the fluid they are to convey
- maximal pressure and temperature of fluid they are to convey
- maximum expected forces due to vibrations
- maximum expected impulse peak pressure.

The metallic materials are to comply with [2.1.2].

d) Where rubber materials are intended for use in bilge, ballast, compressed air, oil fuel, lubricating, hydraulic and thermal oil systems, the construction is to incorporate a single, double or more, closely woven integral wire braid or other suitable material reinforcement acceptable to the Society.

Flexible hoses and expansion joints of plastic materials for the same purposes, such as Teflon or Nylon, which are unable to be reinforced by incorporating closely woven integral wire braid, are to have suitable material reinforcement, as far as practicable.

Rubber or plastic material hoses and expansion joints used in oil supply lines to burners are to have external wire braid protection in addition to the reinforcement mentioned above.

e) Flexible hose assemblies and expansion joints constructed of non-metallic materials, which are intended for installation in piping systems for flammable media or in sea water systems where failure may result in flooding, are to be of fire-resistant type except in cases where such hoses are installed on open decks as defined in NR467, Pt C, Ch 4, Sec 5, [1.4.3], item b) (10) and not used for fuel oil lines.

Fire resistance is to be demonstrated by testing in accordance with the standards specified in Tab 37 and Tab 39.

f) Flexible hoses and expansion joints are to be complete with approved end fittings in accordance with manufacturer's specification. The end connections that do not have a flange are to comply with [2.5.5] as applicable and each type of hose/fitting combination is to be subject to prototype testing to the same standard as that required by the hose or expansion joint with particular reference to pressure and impulse tests.

2.7.5 Specific requirements for the design of flexible hoses

The hose clamps and similar types of end attachments are not acceptable for use in piping systems for steam, flammable media, starting air systems or for sea water systems where failure may result in flooding. In other piping systems, the use of hose clamps may be accepted where the working pressure is less than 0,5 MPa and provided that there are double clamps at each end connection.

2.7.6 Marking

Flexible hoses or expansion joints are to be permanently marked by the manufacturer with the following details:

- manufacturer's name or trademark
- date of manufacture (month/year)
- designation type reference
- nominal diameter
- pressure rating
- temperature rating.

Where a flexible hose assembly or an expansion joint is made up of items from different manufacturers, the components are to be clearly identified and traceable to evidence of prototype testing.

2.8 Valves and accessories

2.8.1 General

a) Valves and accessories are normally to be built in accordance with a recognised standard. Otherwise, they are subject to special consideration for approval by the Society.

Valves and fittings in piping systems are to be compatible with the pipes to which they are attached in respect of their strength (see [1.3.2] for design pressure) and are to be suitable for effective operation at the maximum working pressure they will experience in service.

Valves and accessories which are fitted:

- in a class I piping system, or
- in a class II piping system, or
- on the unit shell, on the collision bulkhead, on fuel oil tanks or on lubricating oil tanks under static pressure,

are to be subject to the applicable testing and inspection required by the Rules. See [20.7.1].

b) Shut-off valves are to be provided where necessary to isolate pumps, heat exchangers, pressure vessels, etc., from the rest of the piping system when necessary, and in particular:

- to allow the isolation of duplicate components without interrupting the fluid circulation
- for survey or repair purposes.

2.8.2 Design of valves and accessories

a) Materials of valve and accessory bodies are to comply with the provisions of [2.1].

b) Connections of valves and accessories with pipes are to comply with the provisions of [2.5].

c) All valves and accessories are to be so designed as to prevent the loosening of covers and glands when they are operated.

d) Valves are to be so designed as to shut with a right-hand (clockwise) motion of the wheels.

e) Valves are to be provided with local indicators showing whether they are open or shut, unless this is readily apparent.

2.8.3 Valves with remote control

a) Unless otherwise specified, the valves and cocks which can not be fitted in places where they are at all times readily accessible are to be provided with remote control.

b) The remote control system and means of local operation are to be independent. For shipside valves and valves on the collision bulkhead, the means for local manual operation are to be permanently attached.

c) For submerged valves in ballast, cargo, or other tanks where accepted by the Society, local manual operation may be by extended spindle or portable hand pump.

The manual operation by hand pump is to have the control lines to each submerged valve provided with the quick coupling connections, as close to the valve actuator as practicable, to allow easy connection of the hand pump. For shipside valves and valves on the collision bulkhead, the hand pump is to be permanently attached and fitted to the quick coupling connection. For other valves, not less than two portable hand pumps are to be provided.

d) In the case of valves which are to be provided with remote control in accordance with the Rules, opening and/or closing of the valves by local manual means is not to render the remote control system inoperable.

e) Power failure of the remote control system is not to cause an undesired change of the valve position.

f) Unless otherwise specified, indicators are to be provided on the remote controls to show whether the valves are open or closed.

The indicators for local manual control are to comply with [2.8.2], item e).

g) Where valves of piping systems are arranged for remote control and are power operated, a secondary means of operating the valves, which may be manual control, is to be provided.

2.9 Sea inlets and overboard discharges

2.9.1 General

Except where expressly stated in Article [8], the requirements of this sub-article do not apply to scuppers and sanitary discharges.

2.9.2 Design of sea inlets and overboard discharges

a) All sea inlets and discharges in the shell plating are to be fitted with efficient and accessible arrangements for preventing the accidental admission of water into the unit.

b) Sea inlets and overboard discharges are to be fitted with valves complying with [2.8] and [2.9.3].

c) Inlet and discharge valves in compartments situated below the assigned load line (normally unattended compartments) are to be provided with remote controlled valves.

Where remote operation is provided by power actuated valves for sea-water inlets and discharges for operation of essential systems, the failure of which may affect the safety of the unit, power supply failure of the control system is not to result in:

- closing of open valves
- opening of closed valves

Note 1: For surface and self-elevating units, and subject to special consideration, the remote operation of the valves may be omitted, when the space containing the valve is normally attended and provided with a high bilge water level detection.

d) Sea inlets are to be so designed and arranged as to limit turbulence and to avoid the admission of air due to motion of the unit.

e) Sea inlets are to be fitted with gratings complying with [2.9.4].

f) Provisions are to be made for clearing sea inlet gratings.

g) Sea chests are to be suitably protected against corrosion.

h) Sea water suction lines are to be fitted with strainers having a free passage area of at least twice that of the sea suction valve.

2.9.3 Valves

a) Sea inlet and overboard discharge valves are to be secured:

- directly on the shell plating, or
- on sea chests built on the shell plating, with scantlings in compliance with Part B or Part D of the Rules, or
- on extra-reinforced and short distance pieces attached to the shell (see Tab 6).

b) The bodies of the valves and distance pieces are to have a spigot passing through the plating without projecting beyond the external surface of such plating or of the doubling plates and stiffening rings, if any.

c) Valves are to be secured by means of:

- bolts screwed through the plating with a countersunk head, or
- studs screwed in heavy pads themselves secured to the hull or chest plating, without penetration of the plating by the stud holes.

d) The use of butterfly valves will be specially considered by the Society. In any event, butterfly valves not fitted with flanges are not to be used for water inlets or overboard discharges unless provisions are made to allow disassembling at sea of the pipes served by these valves without any risk of flooding.

e) The valves are to be provided with indicators showing whether they are open or closed.

f) The materials of the valve bodies and connecting pieces are to comply with Tab 5.

g) Valves located on the unit shell and serving piping systems made of plastics are to comply with Ch 1, App 1, [3.7.1].

2.9.4 Gratings

a) Gratings are to have a free flow area not less than twice the total section of the pipes connected to the inlet.

b) When gratings are secured by means of screws with a countersunk head, the tapped holes provided for such screws are not to pass through the plating or doubling plates outside distance pieces or chests.

c) Screws used for fixing gratings are not to be located in the corners of openings in the hull or of doubling plates.

d) In the case of large sea inlets, the screws used for fixing the gratings are to be locked and protected from corrosion.

e) When gratings are cleared by use of compressed air or steam devices, the chests, distance pieces and valves of sea inlets and outlets thus arranged are to be so constructed as to withstand the maximum pressure to which they may be subjected when such devices are operating.

2.9.5 Connections for blow-down of boilers

a) Blow-down pipes of boilers are to be provided with cocks or valves placed as near the end of the pipes as possible, while remaining readily accessible and located above the engine room floor.

b) Blow-down valves are to be so designed that it is easy to ascertain whether they are open or shut. Where cocks are used, the control keys are to be such that they cannot be taken off unless the cocks are shut. Where valves are used, the control-wheels are to be permanently fixed to the spindle.

c) A protection ring is to be fitted on the shell plating, outside, at the end of the blow-down pipes. The spigot of the valve referred to in [2.9.3], item b), is to pass through this ring.

2.10 Control and monitoring

2.10.1 General

a) Local indicators are to be provided for at least the following parameters:
   - pressure, in pressure vessels, at pump or compressor discharge, at the inlet of the equipment served, on the low pressure side of pressure reducing valves
   - temperatures, in tanks and vessels, at heat exchanger inlet and outlet
   - levels, in tanks and vessels containing liquids.

b) Safeguards are to be provided where an automatic action is necessary to restore acceptable values for a faulty parameter.

c) Automatic controls are to be provided where it is necessary to maintain parameters related to piping systems at a pre-set value.

2.10.2 Level gauges

Level gauges used in flammable oil systems are to be of a type approved by the Society and are subject to the following conditions:

- Their failure or overfilling of the tank is not to permit release of fuel into the space. The use of cylindrical gauges is prohibited. The Society may permit the use of oil-level gauges with flat glasses and self-closing valves between the gauges and fuel tanks.
- Their glasses are to be made of heat-resistant material and efficiently protected against shocks.

3 Welding of steel piping

3.1 Application

3.1.1

a) The following requirements apply to welded joints belonging to class I or II piping systems.
   They may also be applied to class III piping systems, at the discretion of the Society.

b) This article does not apply to refrigerated cargo installation piping systems operating at temperatures lower than minus 40°C.

c) The requirements for qualification of welding procedures are given in NR216.

3.2 General

3.2.1 Welding processes

a) Welded joints of pipes are to be made by means of electric arc or oxyacetylene welding, or any other previously approved process.

b) When the design pressure exceeds 0,7 MPa, oxyacetylene welding is not permitted for pipes with an external diameter greater than 100 mm or a thickness exceeding 6 mm.

3.2.2 Location of joints

The location of welded joints is to be such that as many as possible can be made in a workshop. The location of welded joints to be made on board is to be so determined as to permit their joining and inspection in satisfactory conditions.

3.3 Design of welded joints

3.3.1 Types of joints

a) Except for the fixing of flanges on pipes in the cases mentioned in Fig 1 and for the fixing of branch pipes, joints between pipes and between pipes and fittings are to be of the butt-welded type. However, for class I pipes with an internal diameter not exceeding 50 mm and for class II pipes, socket welded connections of approved types may be used.

b) For butt-welded joints between pipes or between pipes and flanges or other fittings, correctly adjusted backing rings may be used; such rings are to be either of the same grade of steel as the elements to be welded or of such a grade as not to adversely influence the weld; if the backing ring cannot be removed after welding, it is to be correctly profiled.

3.3.2 Assembly of pipes of unequal thickness

If the difference of thickness between pipes to be butt-welded exceeds 10% of the thickness of the thinner pipe plus 1 mm, subject to a maximum of 4 mm, the thicker pipe is to be thinned down to the thickness of the thinner pipe on a length at least equal to 4 times the offset, including the width of the weld if so desired.

3.3.3 Accessories

a) When accessories such as valves are connected by welding to pipes, they are to be provided with necks of sufficient length to prevent abnormal deformations during the execution of welding or heat treatment.

b) For the fixing by welding of branch pipes on pipes, it is necessary to provide either a thickness increase as indicated in [2.2.5] or a reinforcement by doubling plate or equivalent.

3.4 Preparation of elements to be welded and execution of welding

3.4.1 General

Attention is drawn to the provisions of Ch 1, Sec 3, which apply to the welding of pressure pipes.

3.4.2 Edge preparation for welded joints

The preparation of the edges is preferably to be carried out by mechanical means. When flame cutting is used, care is to be taken to remove the oxide scales and any notch due to irregular cutting by matching, grinding or chipping back to sound metal.

3.4.3 Abutting of parts to be welded

a) The elements to be welded are to be so abutted that surface misalignments are as small as possible.

b) As a general rule, for elements which are butt-welded without a backing ring the misalignment between internal walls is not to exceed the lesser of:

- the value given in Tab 20 as a function of thickness t and internal diameter d of these elements, and
- t/4.

Where necessary, the pipe ends are to be bored or slightly expanded so as to comply with these values; the thickness obtained is not to be less than the rule thickness.

c) In the case of welding with a backing ring, smaller values of misalignment are to be obtained so that the space between the backing ring and the internal walls of the two elements to be assembled is as small as possible; normally this space is not to exceed 0,5 mm.

d) The elements to be welded are to be adequately secured so as to prevent modifications of their relative position and deformations during welding.

3.4.4 Protection against adverse weather conditions

a) Pressure pipes are to be welded, both on board and in the shop, away from draughts and sudden temperature variations.

b) Unless special justification is given, no welding is to be performed if the temperature of the base metal is lower than 0°C.

3.4.5 Preheating

a) Preheating is to be performed as indicated in Tab 21, depending on the type of steel, the chemical composition and the pipe thickness.

b) The temperatures given in Tab 21 are based on the use of low hydrogen processes. Where low hydrogen processes are not used, the Society reserves the right to require higher preheating temperatures.

Table 20 : Maximum value of misalignment

d (mm)	t (mm)		
	t ≤ 6	6 < t ≤ 10	10 < t
d < 150	1,0	1,0	1,0
150 ≤ d < 300	1,0	1,5	1,5
300 ≤ d	1,0	1,5	2,0

Table 21 : Preheating temperature

Type of steel		Thickness of thicker part, in mm	Minimum preheating temperature (°C)
C and C-Mn steels	$C + \frac{Mn}{6} \le 0,40$	t ≥ 20 **(2)**	50
	$C + \frac{Mn}{6} > 0,40$	t ≥ 20 **(2)**	100
0,3 Mo		t ≥ 13 **(2)**	100
1 Cr 0,5 Mo		t < 13	100
		t ≥ 13	150
2,25 Cr 1 Mo **(1)**		t < 13	150
		t ≥ 13	200
0,5 Cr 0,5 Mo V **(1)**		t < 13	150
		t ≥ 13	200

(1) For 2,25 Cr 1 Mo and 0,5 Cr 0,5 Mo V grades with thicknesses up to 6 mm, preheating may be omitted if the results of hardness tests carried out on welding procedure qualification are considered acceptable by the Society.

(2) For welding in ambient temperature below 0°C, the minimum preheating temperature is required independent of the thickness unless specially approved by the Society.

3.5 Post-weld heat treatment

3.5.1 General

a) As far as practicable, the heat treatment is to be carried out in a furnace. Where this is impracticable, and more particularly in the case of welding on board, the treatment is to be performed locally by heating uniformly a circular strip, extending on at least 75 mm on both sides of the welded joint; all precautions are to be taken to permit accurate checking of the temperature and slow cooling after treatment.

b) For austenitic and austenitic ferritic steels, post-weld head treatment is generally not required.

3.5.2 Heat treatment after welding other than oxyacetylene welding

a) Stress relieving heat treatment after welding other than oxyacetylene welding is to be performed as indicated in Tab 22, depending on the type of steel and thickness of the pipes.

b) The stress relieving heat treatment is to consist in heating slowly and uniformly to a temperature within the range indicated in Tab 22, soaking at this temperature for a suitable period, normally one hour per 25 mm of thickness with a minimum of half an hour, cooling slowly and uniformly in the furnace to a temperature not exceeding 400°C and subsequently cooling in still atmosphere.

c) In any event, the heat treatment temperature is not to be higher than $(T_T - 20)$°C, where T_T is the temperature of the final tempering treatment of the material.

3.5.3 Heat treatment after oxyacetylene welding

Stress relieving heat treatment after oxyacetylene welding is to be performed as indicated in Tab 23, depending on the type of steel.

Table 22 : Heat treatment temperature

Type of steel	Thickness of thicker part, in mm	Stress relief treatment temperature (°C)
C and C-Mn steels	t ≥ 15 **(1)** **(3)**	550 to 620
0,3 Mo	t ≥ 15 **(1)**	580 to 640
1 Cr 0,5 Mo	t ≥ 8	620 to 680
2,25 Cr 1 Mo 0,5 Cr 0,5 Mo V	any **(2)**	650 to 720

(1) Where steels with specified Charpy V notch impact properties at low temperature are used, the thickness above which post-weld heat treatment is to be applied may be increased, subject to the special agreement of the Society.

(2) For 2,25Cr 1Mo and 0,5Cr 0,5Mo V grade steels, heat treatment may be omitted for pipes having thickness lower than 8 mm, diameter not exceeding 100 mm and service temperature not exceeding 450°C.

(3) For C and C-Mn steels, stress relieving heat treatment may be omitted up to 30 mm thickness, subject to the special agreement of the Society.

Table 23 : Heat treatment after oxyacetylene welding

Type of steel	Heat treatment and temperature (°C)
C and C-Mn	Normalising 880 to 940
0,3 Mo	Normalising 900 to 940
1Cr-0,5Mo	Normalising 900 to 960 Tempering 640 to 720
2,25Cr-1Mo	Normalising 900 to 960 Tempering 650 to 780
0,5Cr-0,5Mo-0,25V	Normalising 930 to 980 Tempering 670 to 720

3.6 Inspection of welded joints

3.6.1 General

a) The inspection of pressure pipe welded joints is to be performed at the various stages of the fabrication further to the qualifications defined in [3.1.1], item c).

b) The examination mainly concerns those parts to be welded further to their preparation, the welded joints once they have been made and the conditions for carrying out possible heat treatments.

c) The required examinations are to be carried out by qualified operators in accordance with procedures and techniques to the Surveyor's satisfaction.

3.6.2 Visual examination

Welded joints, including the inside wherever possible, are to be visually examined.

3.6.3 Non-destructive examinations

Non-destructive tests required are given in:

- Tab 24 for class I pipes
- Tab 25 for class II pipes.

Table 24 : Class I pipe - Type of welded joints

Class I pipe outer diameter D	Butt welded joint	Fillet weld for flange connection	Other welded joint which cannot be radiographed
Frequency of testing	• for D > 75 mm: every weld • for D ≤ 75 mm: minimum 10% of welds selected in agreement with the Surveyor	• for D > 75 mm: every weld • for D ≤ 75 mm: minimum 10% of welds selected in agreement with the Surveyor	• for D > 75 mm: every weld • for D ≤ 75 mm: minimum 10% of welds selected in agreement with the Surveyor
Extent of testing	full length	full length	full length
Type of testing	radiographic or equivalent accepted by the Society	magnetic particle or liquid penetrant	magnetic particle or liquid penetrant

Table 25 : Class II pipe - Type of welded joints

Class II pipe outer diameter D	Butt welded joint	Fillet weld for flange connection	Other welded joint which cannot be radiographed
Frequency of testing	for D > 100 mm: minimum 10% of welds selected in agreement with the Surveyor	for D > 100 mm: minimum 10% of welds selected in agreement with the Surveyor	for D > 100 mm: minimum 10% of welds selected in agreement with the Surveyor
Extent of testing	full length	full length	full length
Type of testing	radiographic or equivalent accepted by the Society	magnetic particle or liquid penetrant	magnetic particle or liquid penetrant

3.6.4 Defects and acceptance criteria

a) Joints for which non-destructive examinations reveal unacceptable defects are to be re-welded and subsequently to undergo a new non-destructive examination. The Surveyor may require that the number of joints to be subjected to non-destructive examination is larger than that resulting from the provisions of [3.6.3].

b) Acceptance criteria and repairs

- Indications evaluated to be crack, lack of fusion or lack of penetration for class I pipes are not acceptable. Indications evaluated to be crack or lack of fusion in welds for class II pipes are not acceptable. Other types of imperfection are to be assessed in accordance with a recognised standard accepted by the Society.
- Unacceptable indications are to be eliminated and repaired where necessary. The repair welds are to be examined on their full length using magnetic particle or liquid penetrant test and ultrasonic or radiographic testing.

  When unacceptable indications are found, additional area of the same weld length are to be examined unless the indication is judged isolated without any doubt. In case of automatic welded joints, additional NDE is to be extended to all areas of the same weld length.

  The extent of examination can be increased at the surveyor's discretion when repeated non-acceptable indications are found.

4 Bending of pipes

4.1 Application

4.1.1 This Article applies to pipes made of:

- alloy or non-alloy steels
- copper and copper alloys.

4.2 Bending process

4.2.1 General

The bending process is to be such as not to have a detrimental influence on the characteristics of the materials or on the strength of the pipes.

4.2.2 Bending radius

Unless otherwise justified, the bending radius measured on the centreline of the pipe is not to be less than:

- twice the external diameter for copper and copper alloy pipes
- 3 times the external diameter for cold bent steel pipes.

4.2.3 Acceptance criteria

a) The pipes are to be bent in such a way that, in each transverse section, the difference between the maximum and minimum diameters after bending does not exceed 10% of the mean diameter; higher values, but not exceeding 15%, may be allowed in the case of pipes which are not subjected in service to appreciable bending stresses due to thermal expansion or contraction.

b) The bending is to be such that the depth of the corrugations is as small as possible and does not exceed 5% of their length.

4.2.4 Hot bending

a) In the case of hot bending, all arrangements are to be made to permit careful checking of the metal temperature and to prevent rapid cooling, especially for alloy steels.

b) Hot bending is to be generally carried out in the temperature range 850°C-1000°C for all steel grades; however, a decreased temperature down to 750°C may be accepted during the forming process.

4.3 Heat treatment after bending

4.3.1 Copper and copper alloy

Copper and copper alloy pipes are to be suitably annealed after cold bending if their external diameter exceeds 50 mm.

4.3.2 Steel

a) After hot bending carried out within the temperature range specified in [4.2.4], the following applies:

- for C, C-Mn and C-Mo steels, no subsequent heat treatment is required
- for Cr-Mo and C-Mo-V steels, a subsequent stress relieving heat treatment in accordance with Tab 22 is required.

b) After hot bending performed outside the temperature range specified in [4.2.4], a subsequent new heat treatment in accordance with Tab 23 is required for all grades.

c) After cold bending at a radius lower than 4 times the external diameter of the pipe, a heat treatment in accordance with Tab 23 is required.

5 Arrangement and installation of piping systems

5.1 General

5.1.1 Unless otherwise specified, piping and pumping systems covered by the Rules are to be permanently fixed on board the unit.

5.2 Piping systems serving hazardous areas

5.2.1 Piping systems are to be designed and arranged to preclude direct communication between:

- hazardous areas of different classifications
- hazardous and non-hazardous areas.

5.3 Location of tanks and piping system components

5.3.1 Flammable oil systems

Location of tanks and piping system components conveying flammable fluids under pressure is to comply with [5.11].

5.3.2 Piping systems with open ends

Attention is to be paid to the requirements for the location of open-ended pipes on board units having to comply with the provisions of [5.6].

5.3.3 Pipe lines located inside tanks

a) The passage of pipes through tanks, when permitted, normally requires special arrangements such as reinforced thickness or tunnels, in particular for:
   - bilge pipes
   - ballast pipes
   - scuppers and sanitary discharges
   - air, sounding and overflow pipes
   - fuel oil pipes.

b) Junctions of pipes inside tanks are to be made by welding or flange connections. See also [2.5.3].

5.3.4 Overboard discharges

a) All discharges in the shell plating below the freeboard deck shall be fitted with efficient and accessible arrangements for preventing the accidental admission of water into the ship.

b) In manned machinery spaces, the valves may be controlled locally and shall be provided with indicators showing whether they are open or closed.

c) Overboard discharges are to be so located as to prevent any discharge of water into the lifeboats while they are being lowered.

5.3.5 Piping and electrical apparatus

As far as possible, pipes are not to pass near switchboards or other electrical apparatus. If this requirement is impossible to satisfy, gutterways or masks are to be provided wherever deemed necessary to prevent projections of liquid or steam on live parts.

5.4 Passage through watertight bulkheads or decks

5.4.1 General

Where penetrations of watertight bulkheads and internal decks are necessary for piping and ventilation, arrangements are to be made to maintain the watertight integrity.

For penetrations of watertight bulkheads or decks by plastic pipes, refer to Ch 1, App 1, [3.6.2].

5.4.2 Materials

Lead or other heat sensitive materials are not to be used in piping systems which penetrate watertight subdivision bulkheads or decks, where deterioration of such systems in the event of fire would impair the watertight integrity of the bulkhead or decks.

This applies in particular to the following systems:

- bilge system
- ballast system
- scuppers and sanitary discharge systems.

5.4.3 Passing-through arrangements

Where bolted connections are used when passing through watertight bulkheads or decks, the bolts are not to be screwed through the plating.

Where welded connections are used, they are to be welded on both sides of the bulkhead or deck.

Penetrations of watertight bulkheads or decks and fire divisions by plastic pipes are to comply with Ch 1, App 1, [3.6.2].

5.4.4 Passage through the collision bulkhead

a) Except as provided in b) the collision bulkhead may be pierced below the bulkhead deck by not more than one pipe for dealing with fluid in the forepeak tank, provided that the pipe is fitted with a screw-down valve capable of being operated from above the bulkhead deck, the valve chest being secured inside the forepeak to the collision bulkhead. the Society may, however, authorize the fitting of this valve on the after side of the collision bulkhead provided that the valve is readily accessible under all service conditions and the space in which it is located is not a cargo space. All valves shall be of steel, bronze or other approved ductile material. Valves of ordinary cast iron or similar material are not acceptable.

b) If the forepeak is divided to hold two different kinds of liquids the Society may allow the collision bulkhead to be pierced below the bulkhead by two pipes, each of which is fitted as required by a), provided the Society is satisfied that there is no practical alternative to the fitting of such a second pipe and that, having regard to the additional subdivision provided in the forepeak, the safety of the unit is maintained

c) The remote operation device of the valve referred to in a) is to include an indicator to show whether the valve is open or shut.

5.5 Independence of lines

5.5.1 Piping systems carrying non-hazardous fluids are generally to be separate from piping systems which may contain hazardous fluids. Cross connection of the piping systems may be permitted where means for avoiding possible contamination of the non-hazardous fluid system by the hazardous medium are provided.

5.5.2 As a general rule, bilge and ballast lines are to be entirely independent and distinct from lines conveying produced oil, lubricating oil and fuel oil, with the exception of:

- pipes located between collecting boxes and pump suctions
- pipes located between pumps and overboard discharges
- pipes supplying compartments likely to be used alternatively for ballast, fuel oil or liquid or dry cargoes, provided such pipes are fitted with blind flanges or other appropriate change-over devices, in order to avoid any mishandling.

5.6 Prevention of progressive flooding

5.6.1 Principle

a) In order to comply with the subdivision and damage stability requirements of Pt B, Ch 1, Sec 3, provision is to be made to prevent any progressive flooding of a dry compartment served by any open-ended pipe, in the event that such pipe is damaged or broken in any other compartment by collision or grounding.

b) For this purpose, if pipes are situated within assumed flooded compartments, arrangements are to be made to ensure that progressive flooding cannot thereby extend to compartments other than those assumed to be flooded for each case of damage. However, the Society may permit minor progressive flooding if it is demonstrated that its effects can be easily controlled and the safety of the unit is not impaired. Refer to Pt B, Ch 1, Sec 3.

5.6.2 Extent of damage

For the definition of the assumed transverse extent of damage, reference is to be made to Pt B, Ch 1, Sec 3.

5.6.3 Piping arrangement

a) The assumed transverse extent of damage is not to contain any pipe with an open end in a compartment located outside this extent, except where the section of such pipe does not exceed 710 mm^2.

Note 1: Where several pipes are considered, the limit of 710 mm^2 applies to their total section.

b) Where the provisions of a) cannot be fulfilled, and after special examination by the Society, pipes may be situated within the assumed transverse extent of damage penetration provided that:

- either a closable valve operable from above the bulkhead deck is fitted at each penetration of a watertight subdivision and secured directly on the bulkhead, or
- a closable valve operable from above the bulkhead deck is fitted at each end of the pipe concerned, the valves and their control system being inboard of the assumed extent of damage, or
- the tanks to which the pipe concerned leads are regarded in the damage stability calculations as being flooded when damage occurs in a compartment through which the pipe passes.

c) Valves required to be operable from above the bulkhead deck are to be fitted with an indicator to show whether the valve is open or shut.

Where the valve is remote controlled by other than mechanical means, and where the remote control system is located, even partly, within the assumed extent of damage penetration, this system is to be such that the valve is automatically closed by loss of power.

d) Air and overflow pipes are to be so arranged as to prevent the possibility of flooding of other tanks in other watertight compartments in the event of any one tank being flooded.

This arrangement is to be such that in the range of positive residual righting levers beyond the angle of equilibrium stage of flooding, the progressive flooding of tanks or watertight compartments other than that flooded does not occur.

5.7 Provision for expansion

5.7.1 General

Piping systems are to be so designed and pipes so fixed as to allow for relative movement between pipes and the unit's structure, having due regard to the:

- temperature of the fluid conveyed
- coefficient of thermal expansion of the pipes material
- deformation of the unit's structure.

5.7.2 Fitting of expansion devices

All pipes subject to thermal expansion and those which, due to their length, may be affected by deformation of the hull, are to be fitted with expansion pieces or loops.

5.8 Supporting of the pipes

5.8.1 General

Unless otherwise specified, the fluid lines referred to in this Section are to consist of pipes connected to the unit's structure by means of collars or similar devices.

5.8.2 Arrangement of supports

Builders are to take care that:

a) The arrangement of supports and collars is to be such that pipes and flanges are not subjected to abnormal bending stresses, taking into account their own mass, the metal they are made of, and the nature and characteristics of the fluid they convey, as well as the contractions and expansions to which they are subjected.

b) Heavy components in the piping system, such as valves, are to be independently supported.

5.9 Protection of pipes

5.9.1 Protection of sea water pipes from mechanical damage

Seawater pipes in storage compartments other than those containing liquid are to be protected from impact of stored goods where they are liable to be damaged.

5.9.2 Protection against corrosion and erosion

a) Pipes are to be efficiently protected against corrosion, particularly in their most exposed parts, either by selection of their constituent materials, or by an appropriate coating or treatment.

b) The layout and arrangement of sea water pipes are to be such as to prevent sharp bends and abrupt changes in section as well as zones where water may stagnate. The inner surface of pipes is to be as smooth as possible, especially in way of joints. Where pipes are protected against corrosion by means of galvanising or other inner coating, arrangements are to be made so that this coating is continuous, as far as possible, in particular in way of joints.

c) If galvanised steel pipes are used for sea water systems, the water velocity is not to exceed 3 m/s.

d) If copper pipes are used for sea water systems, the water velocity is not to exceed 2 m/s.

e) Arrangements are to be made to avoid galvanic corrosion.

f) If aluminium bras pipes are used for sea water systems, the water velocity is not to exceed 3 m/s

g) If 90/10 copper-nickel-iron pipes are used for sea water systems, the water velocity is not to exceed 3,5 m/s

h) If 70/30 copper-nickel pipes are used for sea water systems, the water velocity is not to exceed 5 m/s

i) If GRP pipes are used for sea water systems, the water velocity is not to exceed 5 m/s.

5.9.3 Protection against frosting

Pipes are to be adequately insulated against cold wherever deemed necessary to prevent frost.

This applies specifically to pipes passing through refrigerated spaces and which are not intended to ensure the refrigeration of such spaces.

5.9.4 Protection of high temperature pipes and components

a) All pipes and other components where the temperature may exceed 220°C are to be efficiently insulated. Where necessary, precautions are to be taken to protect the insulation from being impregnated with flammable oils.

b) Particular attention is to be paid to lagging in way of flanges.

5.10 Valves, accessories and fittings

5.10.1 General

Cocks, valves and other accessories are generally to be arranged so that they are easily visible and accessible for manoeuvring, control and maintenance. They are to be installed in such a way as to operate properly.

5.10.2 Valves and accessories

a) In machinery spaces and tunnels, the cocks, valves and other accessories of the fluid lines referred to in this Section are to be placed:
   - above the floor, or
   - when this is not possible, immediately under the floor, provided provision is made for their easy access and control in service.

b) Control-wheels of low inlet valves are to rise at least 0,45 m above the lowest floor.

5.10.3 Flexible hoses and expansion joints

a) Flexible hoses and expansion joints are to be in compliance with [2.7]. They are to be installed in clearly visible and readily accessible locations.

b) The number of flexible hoses and expansion joints is to be limited and kept to minimum.

c) In general, flexible hoses and expansion joints are to be limited to a length necessary to provide for relative movement between fixed and flexibly mounted items of machinery/equipment or systems.

d) The installation of a flexible hose assembly or an expansion joint is to be in accordance with the manufacturer's instructions and use limitations, with particular attention to the following:
   - orientation
   - end connection support (where necessary)
   - avoidance of hose contact that could cause rubbing and abrasion
   - minimum bend radii.

e) Flexible hose assemblies or expansion joints are not to be installed where they may be subjected to torsion deformation (twisting) under normal operating conditions.

f) Where flexible hoses or an expansion joint are intended to be used in piping systems conveying flammable fluids that are in close proximity of heated surfaces, the risk of ignition due to failure of the hose assembly and subsequent release of fluids is to be mitigated, as far as practicable, by the use of screens or other similar protection, to the satisfaction of the Society.

g) The adjoining pipes are to be suitably aligned, supported, guided and anchored.

h) Isolating valves are to be provided permitting the isolation of flexible hoses intended to convey flammable oil or compressed air.

i) Expansion joints are to be protected against over extension or over compression.

j) Where they are likely to suffer external damage, flexible hoses and expansion joints of the bellows type are to be provided with adequate protection.

5.10.4 Thermometers

Thermometers and other temperature-detecting elements in fluid systems under pressure are to be provided with pockets built and secured so that the thermometers and detecting elements can be removed while keeping the piping under pressure.

5.10.5 Pressure gauges

Pressure gauges and other similar instruments are to be fitted with an isolating valve or cock at the connection with the main pipe.

5.10.6 Name plates

a) Accessories such as cocks and valves on the fluid lines referred to in this Section are to be provided with nameplates indicating the apparatus and lines they serve except where, due to their location on board, there is no doubt as to their purpose.

b) Nameplates are to be fitted at the upper part of air and sounding pipes.

5.11 Additional arrangements for flammable fluids

5.11.1 General

All necessary precautions are to be taken to reduce fire risks from flammable liquids, such as:

- drips
- leaks under pressure
- overflow
- hydrocarbon accumulation in particular under lower floors
- discharges of oil vapours during heating
- soot or unburnt residue in smoke stacks or exhaust pipes.

Unless otherwise specified, the requirements in [5.11.3] apply to:

- fuel oil systems, in all spaces
- lubricating oil systems, in machinery spaces
- other flammable oil systems, in locations where means of ignition are present.

5.11.2 Prohibition of carriage of flammable oils in forepeak tanks of surface units

In surface units, fuel oil, lubricating oil and other flammable oils are not to be carried in forepeak tanks or tanks forward of the collision bulkhead.

5.11.3 Prevention of flammable oil leakage ignition

a) As far as practicable, the piping arrangement in the flammable oil systems shall comply generally with the following:
   - The conveying of flammable oils through accommodation and service spaces is to be avoided. Where it is not possible, the arrangement may be subject to special consideration by the Society, provided that the pipes are of a material approved having regard to the fire risk.
   - The pipes are not to be located immediately above or close to the hot surfaces (exhaust manifolds, silencers, steam pipelines, boilers, etc.), electrical installations or other sources of ignition. Otherwise, suitably protection (screening and effective drainage to the safe position) is to be provided to prevent of spraying or leakage onto the sources of ignition.
   - Parts of the piping systems conveying heated flammable oils under pressure exceeding 0,18 MPa are to be placed above the platform or in any other position where defects and leakage can readily be observed. The machinery spaces in way of such parts are to be adequately illuminated.

b) No flammable oil tanks are to be situated where spillage or leakage therefrom can constitute a hazard by falling on:
   - hot surfaces, including those of boilers, heaters, steam pipes, exhaust manifolds and silencers
   - electrical equipment
   - air intakes
   - other sources of ignition.

c) Parts of flammable oil systems under pressure exceeding 0,18 MPa such as pumps, filters and heaters are to comply with the provisions of item b) above.

d) Mechanical joints, expansion joints and flexible parts of flammable oil lines are to be screened or otherwise suitably protected to avoid as far as practicable oil spray or oil leakages onto hot surfaces, into machinery air intakes, or on other sources of ignition.

e) Any relief valve of fuel oil and lubricating oil systems is to discharge to a safe position, such as an appropriate tank.

f) Appropriate means are to be provided to prevent undue opening (due to vibrations) of air venting cocks fitted on equipment or piping containing flammable liquid under pressure.

5.11.4 Provisions for flammable oil leakage containment

a) Tanks used for the storage of flammable oils together with their fittings are to be so arranged as to prevent spillages due to leakage or overfilling.

b) Drip trays with adequate drainage to contain possible leakage from flammable fluid systems are to be fitted:
   - under independent tanks
   - under burners
   - under purifiers and any other oil processing equipment
   - under pumps, heat exchangers and filters
   - under valves and all accessories subject to oil leakage
   - surrounding internal combustion engines.

c) The coaming height of drip trays is to be appropriate for the service and not less than 75 mm.

d) Where boilers are located in machinery spaces on ‘tweendecks and the boiler rooms are not separated from the machinery spaces by watertight bulkheads, the ‘tweendecks are to be provided with oil-tight coamings at least 200 mm in height.

e) Where drain pipes are provided for collecting leakages, they are to be led to an appropriate drain tank.

f) The draining system of the room where thermal fluid heaters are fitted, as well as the save all of the latter, are not to allow any fire extension outside this room. See also [13.3.2].

5.11.5 Drain tank

The drain tank is not to form part of an overflow system and is to be fitted with an overflow alarm device.

5.11.6 Valves

All valves and cocks forming part of flammable oil systems are to be capable of being operated from readily accessible positions and, in machinery spaces, from above the working platform.

5.11.7 Level switches

Level switches fitted to flammable oil tanks are to be contained in a steel or other fire-resisting enclosure.

6 Bilge systems

6.1 Principle

6.1.1 General

An efficient bilge pumping system shall be provided, capable of pumping from and draining any watertight compartment other than a space permanently appropriated for the carriage of fresh water, water ballast, fuel oil or liquid cargo and for which other efficient means of pumping are provided, under all practical conditions, whether the unit is upright or inclined as specified in Ch 1, Sec 1, Tab 1, Ch 1, Sec 1, Tab 2 and Ch 1, Sec 1, Tab 3.

Note 1: Bilge pumping system is not intended at coping with water ingress resulting from structural or main sea water piping damage.

6.1.2 Availability of the bilge system

The bilge system is to be able to work while the other essential installations of the unit, especially the fire-fighting installations, are in service.

6.1.3 Prevention of pollution by oil

The discharge of oily effluents associated with the normal operation of machinery systems is subject to MARPOL 73/78, Annex I.

The discharge of oily effluents associated with offshore processing and the discharge of production water and displacement water are subject to national or regional regulations, as applicable.

Piping systems intended for machinery oily effluents are to be completely independent from any piping system intended for other oily effluents.

6.2 Design of bilge systems

6.2.1 General

a) The bilge pumping system is to consist of pumps connected to a bilge main line so arranged as to allow the draining of all spaces mentioned in [6.1.1] through bilge branches, distribution boxes and bilge suctions, except for some small spaces where individual suctions by means of hand pumps may be accepted.

b) The bilge pumping system is to be so arranged that any accumulated water can be drained even when the unit has an inclination up to 5° in any direction.

c) Automatic means are to be provided to detect the presence of water in the compartments which are adjacent to the sea or adjacent to tanks containing liquids and in void compartments through which pipes conveying liquids pass.

   In the event of water detection, an alarm is to be given in a manned control room.

d) If the Society is satisfied that the safety of the unit is not impaired, the bilge pumping arrangements and the means to detect the presence of water may be dispensed with in particular compartments.

6.2.2 Prevention of inadvertent flooding Independence of the lines

a) The arrangement of the bilge and ballast pumping system shall be such as to prevent the possibility of water passing from the sea and from water ballast spaces into dry compartments and machinery spaces, or from one compartment to another.

b) Provisions are to be made to prevent any deep tank having bilge and ballast connections being inadvertently flooded from the sea when containing products other than sea water, or being discharged through a bilge pump when containing water ballast.

c) Bilge lines are to be entirely independent and distinct from other lines except where permitted in [5.5].

d) Hazardous and non-hazardous areas are to be provided with separate drainage or pumping arrangement.

e) On floating production storage and offloading units, the arrangements for the draining of:
- cofferdams located at the fore and aft ends of the cargo area
- other cofferdams and void spaces located within the cargo area
- cargo pump rooms and other pump rooms
- pipe tunnels,

are to comply with the provisions of Pt D, Ch 1, Sec 12, [2.2].

6.3 Arrangement of bilge suctions

6.3.1 General

In all cases, arrangements are to be made such as to allow a free and easy flow of water to bilge suctions.

6.3.2 Number and distribution of bilge suctions

The bilge suctions in spaces below the bulkhead deck are to be so located that it is possible to drain the accumulated liquid in those spaces by:

a) Where the bottom of the space, bottom plating or top of the double bottom slopes down to the centreline by more than 5°:
- in machinery spaces containing essential machinery such as engines, bilge pumps or ballast pumps, at least one branch centreline suction, one direct centreline suction and one emergency bilge suction
- in machinery spaces other than those containing essential machinery, at least one centreline branch suction and one direct centreline suction
- in dry compartments other than machinery spaces, at least one branch centreline suction.

b) Where the bottom of the space is horizontal or slopes down to the sides:
- in machinery spaces containing essential machinery such as engines, bilge pumps or ballast pumps, at least one branch suction on each side, one direct suction on each side and one emergency bilge suction
- in machinery spaces other than those containing essential machinery, at least one branch suction and one direct suction on each side
- in dry compartments other than machinery spaces, at least one branch suction on each side.

c) Dry compartments other than those containing essential machinery can be drained to other spaces provided with bilge pumping capability.

6.3.3 Branch bilge suctions

Branch bilge suctions are to be arranged as required in [6.3.2].

Additional branch bilge suctions may be required if the tank top is of particular design or shows discontinuity.

6.3.4 Direct bilge suctions

The direct bilge suction is to be led direct to an independent power bilge pump and so arranged that it can be used independently of the main bilge line.

The use of ejectors for pumping through the direct suction will be given special consideration.

6.3.5 Emergency bilge suction

a) The emergency bilge suction required in [6.3.2] is to be led directly from the drainage level of the concerned space to the largest available independent power driven pump other than a bilge pump.

b) The emergency bilge suction is to be located at the lowest possible level.

6.4 Draining of particular spaces

6.4.1 Draining of cofferdams

Cofferdams adjacent to the sea or to tanks containing liquids and cofferdams through which piping conveying liquid passes are to be drained by permanently installed bilge or drainage systems.

Note 1: Portable pumping means may be accepted only where:
- the wetted surface of the compartment, as defined in [6.6.2], is less than 130 m²
- the height of the compartment does not exceed 7,3 m
- the pump is located above the cofferdam top
- the pump has suitable NPSH.

Note 2: Cofferdams which are not provided with bilge or drainage systems in compliance with the above are to be accounted for in the unit stability analysis.

6.4.2 Draining of chain lockers

Chain lockers are to be capable of being drained by a permanently installed bilge or drainage system or by portable means. Means are to be provided for removal of mud and debris from the bilge or drainage system.

6.4.3 Draining of tunnels

a) Tunnels are to be drained by means of suctions connected to the main bilge system. Such suctions are generally to be located in wells at the aft end of the tunnels.

b) Where the top of the double bottom, in the tunnel, slopes down from aft to forward, an additional suction is to be provided at the forward end of this space.

6.4.4 Draining of refrigerated spaces

Provision is to be made for the continuous drainage of condensate in refrigerated and air cooler spaces. To this end, valves capable of blanking off the water draining lines of such spaces are not to be fitted, unless they are operable from an easily accessible place located above the load waterline.

6.5 Bilge pumps

6.5.1 Number and arrangement of pumps

a) At least two power pumps connected to the main bilge system are to be provided. One of the pump is to be dedicated to bilge pumping.

b) Each pump may be replaced by a group of pumps connected to the bilge main, provided their total capacity meets the requirements specified in [6.5.4].

c) Where portable means of pumping are permitted, at least two pumps are to be available on board.

6.5.2 Use of ejectors

One of the pumps may be replaced by a hydraulic ejector connected to a high pressure water pump and capable of ensuring the drainage under similar conditions to those obtained with the other pump.

6.5.3 Use of other pumps for bilge duties

Other pumps, such as fire, general service, sanitary service or ballast pumps, may be used for bilge duties provided that:

- they meet the capacity requirements
- suitable piping arrangements are made, complying with the provisions of [6.5.6]
- pumps are available for bilge duty when necessary.

6.5.4 Capacity of the pumps

a) Each power bilge pump is to be capable of pumping water through the required main bilge pipe at a speed of not less than 2 m/s.

b) The capacity of each pump or group of pumps is not to be less than:

$Q = 0{,}00565\ d^2$

where:

Q : Minimum capacity of each pump or group of pumps, in m^3/h

d : Internal diameter, in mm, of the bilge main as defined in [6.6.4].

c) If the capacity of one of the pumps or one of the groups of pumps is less than the Rule capacity, the deficiency may be compensated by an excess capacity of the other pump or group of pumps; as a rule, such deficiency is not permitted to exceed 30% of the Rule capacity.

d) The capacity of hand pumps is to be based on one movement once a second.

e) Where an ejector is used in lieu of a driven pump, its suction capacity is not to be less than the required capacity of the pump it replaces.

6.5.5 Other characteristics of the pumps

a) Bilge pumps are to be of the self-priming type. Centrifugal pumps are to be fitted with efficient priming means, unless an approved priming system is provided to ensure the priming of pumps under normal operating conditions.

b) Circulating or cooling water pumps connected to an emergency bilge suction need not be of the self-priming type.

c) Hand pumps are to have a maximum suction height not exceeding 7,30 m and to be operable from a position located above the load waterline.

6.5.6 Connection of power pumps

a) Bilge pumps and other power pumps serving essential services which have common suction or discharge are to be connected to the pipes in such a way that:
   - compartments and piping lines remain segregated in order to prevent possible intercommunication
   - the operation of any pump is not affected by the simultaneous operation of other pumps.

b) The isolation of any bilge pump for examination, repair or maintenance is to be made possible without impeding the operation of the remaining bilge pumps.

6.5.7 Electrical supply of submersible pump motors

a) Where submersible bilge pumps are provided, arrangements are to be made to start their motors from a convenient position above the bulkhead deck.

b) Where an additional local-starting device is provided at the motor of a permanently installed submersible bilge pump, the circuit is to be arranged to provide for the disconnection of all control wires therefrom at a position adjacent to the starter installed on the deck.

6.6 Size of bilge pipes

6.6.1 General

The diameter of the bilge pipes fitted to surface units is to comply with the relevant requirements of Pt C, Ch 1, Sec 10 of the Ship Rules.

The following requirements apply to units other than surface units.

6.6.2 Branch bilge suction pipes

The internal diameter, in mm, of branch suctions from each compartment is not to be less than the diameter given by the following formula, to the nearest 5 mm:

$$d_1 = 2,15\sqrt{A} + 25$$

where:

A : Wetted surface, in m^2, of the compartment, excluding stiffening members, when the compartment is half filled with water.

d_1 is not to be less than 50 mm.

6.6.3 Distribution box branch pipes

The cross-section of any branch pipe connecting the bilge main to a bilge distribution box is not to be less than the sum of the cross-sections required for the two largest branch suctions pipes connected to this box. However, this cross-section need not exceed that of the main bilge line.

6.6.4 Main bilge line

The internal diameter, in mm, of the main bilge line is not to be less than the diameter given by the following formula:

$$d = 3,36\sqrt[3]{\Delta} + 25$$

where:

Δ : Maximum unit displacement when fully loaded, in metric tons.

d is not to be less than the combined areas of the two largest branch suctions.

6.6.5 Direct suctions

The internal diameter of direct suctions pipes is not to be less than that required for the main bilge line.

6.6.6 Emergency suctions

The internal diameter of emergency bilge suction pipes is not to be less than that of the pump inlet.

6.6.7 Scuppers in aft spaces

Any scupper provided for draining aft spaces and discharging to the tunnel is to have an internal diameter not less than 35 mm.

6.7 Bilge accessories

6.7.1 Drain valves on watertight bulkheads

a) The fitting of drain valves or similar devices is not allowed on the collision bulkhead.

b) On other watertight bulkheads, the fitting of drain valves or similar devices is allowed unless practical alternative draining means exist. Such valves are to be easily accessible at all times and operable from above the freeboard deck. Means indicating whether the valves are open or closed are to be provided.

6.7.2 Screw-down non-return valves

a) Accessories are to be provided to prevent intercommunication of compartments or lines which are to remain segregated from one another. For this purpose, screw-down non-return devices or similar devices are to be fitted:
   - on the pipe connections to bilge distribution boxes or to the alternative valves, if any
   - on direct and emergency suctions in machinery spaces
   - on the suctions of pumps which also have connections from the sea or from compartments normally intended to contain liquid
   - on flexible bilge hose connections
   - on the suctions of water bilge ejectors
   - at the open end of bilge pipes passing through deep tanks
   - in compliance with the provisions for the prevention of progressive flooding, if applicable.

b) Screw-down and other non-return valves are to be of a recognised type which does not offer undue obstruction to the flow of water.

6.7.3 Mud boxes

In machinery spaces and shaft tunnels, termination pipes of bilge suctions are to be straight and vertical and are to be led to mud boxes so arranged as to be easily inspected and cleaned.

The lower end of the termination pipe is not to be fitted with a strum box.

6.7.4 Strum boxes

a) In compartments other than machinery spaces and shaft tunnels, the open ends of bilge suction pipes are to be fitted with strum boxes or strainers having holes not more than 10 mm in diameter. The total area of such holes is to be not less than twice the required cross-sectional area of the suction pipe.

b) Strum boxes are to be so designed that they can be cleaned without having to remove any joint of the suction pipe.

6.7.5 Bilge wells

a) The wells provided for draining the various compartments are to be of a capacity not less than 0,15 m^3. In small compartments, smaller cylindrical wells may be fitted.

b) For surface units, bilge wells are to comply with the provisions of Pt B, Ch 4, Sec 4 of the Ship Rules.

6.7.6 Liquid sealed traps

a) The bilge line of refrigerated spaces is to be provided with liquid sealed traps of adequate size arranged for easy cleaning and refilling with brine. These traps are to be fitted with removable grids intended to hold back waste products when defrosting.

b) Where drain pipes from separate refrigerated rooms join a common main, each of these pipes is to be provided with a liquid sealed trap.

c) As a general rule, liquid sealed traps are to be fitted with non-return valves. However, for refrigerated spaces not situated in the unit bottom, non-return valves may be omitted, provided this arrangement does not impair the integrity of the watertight subdivision.

6.8 Materials

6.8.1 *All bilge pipes used in or under coal bunkers or fuel storage tanks or in boiler or machinery spaces, including spaces in which oil-settling tanks or fuel oil pumping units are situated, shall be of steel or other suitable material non-sensitive to heat.*

6.9 Bilge piping arrangement

6.9.1 Passage through double bottom compartments

Bilge pipes are not to pass through double bottom compartments. If such arrangement is unavoidable, the parts of bilge pipes passing through double bottom compartments are to have reinforced thickness, as per Tab 6 for steel pipes.

6.9.2 Passage through deep tanks

The parts of bilge pipes passing through deep tanks intended to contain water ballast, fresh water, liquid cargo or fuel oil are normally to be contained within pipe tunnels. Alternatively, such parts are to have reinforced thickness, as per Tab 6 for steel pipes, and are to be made either of one piece or several pieces assembled by welding, by reinforced flanges or by devices deemed equivalent for the application considered; the number of joints is to be as small as possible. These pipes are to be provided at their ends in the holds with non-return valves.

6.9.3 Provision for expansion

Where necessary, bilge pipes inside tanks are to be fitted with expansion bends. Sliding joints are not permitted for this purpose.

6.9.4 Connections

Connections used for bilge pipes passing through tanks are to be welded joints or reinforced flange connections.

6.9.5 Access to valves and distribution boxes

All distribution boxes and manually operated valves in connection with the bilge pumping arrangement shall be in positions which are accessible under ordinary circumstances.

Hand-wheels of valves controlling emergency bilge suctions are to rise at least 0,45 m above the manoeuvring floor.

7 Ballast systems

7.1 Principle

7.1.1 General

Each unit is to be provided with a ballasting system capable of adjusting the trim and the draught of the unit at any time, in particular when required for stability purposes.

7.1.2 Availability of the ballast system

The ballast system is to be able to work while the other essential installations of the unit, especially the bilge and fire-fighting installations, are in service.

The ballast system is to be so arranged that any ballast tank can be ballasted and deballasted by means of two independent pumps.

7.1.3 Ballast Water Exchange

Units where ballast water exchange operations are foreseen are to comply with the relevant requirements of NR467, Pt C, Ch 1, Sec 10, [7.3].

7.2 Design of ballast systems

7.2.1 Independence of ballast lines

Ballast lines are to be entirely independent and distinct from other lines except where permitted in [5.5].

7.2.2 Prevention of undesirable communication between spaces or with the sea

Ballast systems in connection with bilge systems are to be so designed as to avoid any risk of undesirable communication between spaces or with the sea. See [6.2.2].

7.3 Ballast pumping arrangement

7.3.1 Filling and suction pipes

a) All tanks including aft and fore peak and double bottom tanks intended for ballast water are to be provided with suitable filling and suction pipes connected to the pumps.

b) Small tanks used for the carriage of domestic fresh water may be served by hand pumps.

c) Suctions are to be so positioned that the transfer of sea water can be suitably carried out in the normal operating conditions of the unit. In particular, two suctions may be required in long compartments.

7.3.2 Pumps

Bilge pumps may be used for ballast water transfer provided the provisions of [6.5.3] are fulfilled.

7.3.3 Passage of ballast pipes through tanks

If not contained in pipe tunnels, the ballast steel pipes passing through tanks intended to contain fresh water, fuel oil or liquid cargo are:

- to have reinforced thickness, as per Tab 6
- to consist either of a single piece or of several pieces assembled by welding, by reinforced flanges or by devices deemed equivalent for the application considered
- to have a minimal number of joints in these lines
- to have expansion bends in these lines within the tank, where needed
- not to have slip joints.

7.3.4 Ballast valves and piping arrangements

a) Ballast tank valves

Valves controlling flow to ballast tanks are to be arranged so that they remain closed at all times except when ballasting. Where butterfly valves are used, they are to be of a type able to prevent movement of the valve position due to vibration or flow of fluids.

b) Remote control valves

Remote control valves, where fitted, are to be arranged so that they close and remain closed in the event of loss of control power. The valves may remain in the last ordered position upon loss of power, provided that there is a readily accessible manual means to close the valves upon loss of power.

Remote control valves are to be clearly identified as to the tanks they serve and are to be provided with position indicators at the ballast control station.

c) Ballast piping arrangements

The piping arrangements are to comply with the requirements of [5.6] concerning the prevention of progressive flooding. The pipes, if damaged, which are located within the extent of assumed damage, are not to affect damage stability considerations.

7.3.5 Control and indicating systems

A central ballast control station should be provided. It should be located above the worst damage waterline and in a space not within the assumed extent of damage referred to in Part C, Chapter 3 and adequately protected from weather. It should be provided with the following control and indicating systems, having appropriate audible and visual alarms, where applicable:

- *ballast pump control system*
- *ballast pump status-indicating system*
- *ballast valve control system*
- *ballast valve position-indicating system*
- *tank level indicating system*
- *draught indicating system*
- *heel and trim indicators*
- *power availability indicating system (main and emergency)*
- *ballast system hydraulic/pneumatic pressure-indicating system.*

7.4 Drainage and sediment control

7.4.1 All ballast and preload tanks and related piping systems should be designed to facilitate effective drainage and removal of sediments. Coatings which could entrain sediments and harmful aquatic organisms should be avoided.

Note 1: Refer to the Guidelines for the control and management of ships' ballast water to minimize the transfer of harmful aquatic organisms and pathogens, adopted by the Organization by resolution A.868(20).

7.5 Requirements for installation of ballast water treatment systems (BWTS)

7.5.1 Capacity

The approved capacity of the ballast water treatment system (BWTS) is not to be less than the maximum expected flow rate of the ballast pumps. If any, the operating restrictions to be observed during the ballast water treatment (e.g. limitation of the number of ballast pumps in simultaneous operation) are to be displayed in way of the BWTS control position and noted in the ship's ballast water management plan.

7.5.2 Location

The equipment intended for the treatment of ballast water may be located in machinery spaces provided that the safety requirements below are satisfied.

7.5.3 Installation in hazardous space

The ballast water treatment system, if intended to be fitted in locations where flammable atmospheres may be present, is to comply with the relevant safety regulations for such spaces. Any electrical equipment of the system is to be located in a non-hazardous area, or is to be certified as safe for use in a hazardous area. Any moving parts, which are fitted in hazardous areas, are to be arranged so as to avoid the formation of static electricity.

7.5.4 Chemicals and hazardous by-products

Arrangements are to be made for:

- dealing with the possible production of hazardous by-products (aqueous or gaseous) during the ballast water treatment process
- the safe storage and handling of chemicals.

The risks of fire, spillage, release of hazardous vapours and exposure of the crew, during both normal operations and emergency situations, are to be taken into account. The location of the chemical storage tanks and handling equipment, the ventilation and fire-fighting systems and the draining arrangements are to be considered in this respect.

The relevant provisions of IMO Circular BWM.2/Circ.20 are to be satisfied.

Adequate personal and protective equipment is to be provided for all normal operations and emergency situations.

Note 1: IMO Circular BWM.2/Circ.20: Guidance to ensure safe handling and storage of chemicals and preparations used to treat ballast water and the development of safety procedures for risks to the ship and crew resulting from the treatment process.

7.5.5 Materials

The selection of materials (including their coatings) used for the piping system containing treated ballast water is to take into account the risk of corrosion, which may be increased by the treatment process.

Chemical storage tanks and piping are to be made of suitable material, resistant to corrosion.

7.5.6 Additional requirements for FPSOs and FSUs

In FPSOs and FSUs, the equipment intended for the treatment of ballast water from tanks located in the cargo area is not to be located in machinery spaces, except when:

- it is used only during ballasting operations, and
- the ballast water discharge piping does not pass through the machinery spaces.

7.6 Design of integrated cargo and ballast systems on tankers

7.6.1 Application

The following requirements are applicable to integrated cargo and ballast systems installed on FPSOs and FSUs, irrespective of their size.

Within the scope of these requirements, integrated cargo and ballast system means any integrated hydraulic and/or electric system used to drive both cargo and ballast pumps (including active control and safety systems and excluding passive components, e.g. piping).

7.6.2 Functional requirements

The operation of cargo and/or ballast systems may be necessary, under certain emergency circumstances, to enhance the safety of the unit.

As such, measures are to be taken to prevent cargo and ballast pumps becoming inoperative simultaneously due to a single failure in the integrated cargo and ballast system, including its control and safety systems.

7.6.3 Design features

The following design features are, inter alia, to be fitted:

a) The emergency stop circuits of the cargo and ballast systems are to be independent from the circuits for the control systems. A single failure in the control system circuits or the emergency stop circuits are not to render the integrated cargo and ballast system inoperative.

b) Manual emergency stops of the cargo pumps are to be arranged in a way that they are not to cause the stop of the power pack making ballast pumps inoperable.

c) The control systems are to be provided with backup power supply, which may be satisfied by a duplicate power supply from the main switch board. The failure of any power supply is to provide audible and visible alarm activation at each location where the control panel is fitted.

d) In the event of failure of the automatic or remote control systems, a secondary means of control is to be made available for the operation of the integrated cargo and ballast system. This is to be achieved by manual overriding and/or redundant arrangements within the control systems.

8 Scuppers and sanitary discharges

8.1 Application

8.1.1 This Article applies to:

- scuppers and sanitary discharge systems, and
- discharges from sewage tanks.

Discharges in connection with machinery operation are dealt with in [2.9].

8.2 Principle

8.2.1

a) Scuppers, sufficient in number and suitable in size, are to be provided to permit the drainage of water likely to accumulate in the spaces which are not located in the unit's bottom.

b) The number of scuppers and sanitary discharge openings in the shell plating is to be reduced to a minimum either by making each discharge serve as many as possible of the sanitary and other pipes, or in any other satisfactory manner.

c) Except otherwise specified, the design of scuppers and sanitary discharges shall generally comply with recognised national or international standard acceptable to the Society (reference is made to ISO 15749-1 to -5, as applicable).

8.3 Drainage from spaces below the freeboard deck or within enclosed superstructures and deckhouses on the freeboard deck

8.3.1 Normal arrangement

Scuppers and sanitary discharges from spaces below the freeboard deck or from within superstructures and deckhouses on the freeboard deck fitted with watertight doors are to be led to:

- the bilge in the case of scuppers, or
- suitable sanitary tanks in the case of sanitary discharges.

8.3.2 Alternative arrangement

The scuppers and sanitary discharges may be led overboard provided that:

- the spaces drained are located above the load waterline formed by a 5° heel, to port or starboard, at a draft corresponding to the assigned summer freeboard, and
- the pipes are fitted with efficient means of preventing water from passing inboard in accordance with:
  - [8.5] where the spaces are located below the margin line
  - [8.6] where the spaces are located above the margin line.

Note 1: The margin line is defined as a line drawn at least 76 mm below the upper surface of the freeboard deck.

8.4 Drainage of superstructures or deckhouses not fitted with efficient weathertight doors

8.4.1 Scuppers leading from superstructures or deckhouses not fitted with watertight doors are to be led overboard.

8.5 Arrangement of discharges from spaces below the margin line

8.5.1 Normal arrangement

Each separate discharge led though the shell plating from spaces below the margin line is to be provided with one automatic non-return valve fitted with positive means of closing it from above the bulkhead or freeboard deck.

8.5.2 Alternative arrangement when the inboard end of the discharge pipe is above the summer waterline by more than 0,01 L

Where the vertical distance from the summer load waterline to the inboard end of the discharge pipe exceeds 0,01 L, the discharge may have two automatic non-return valves without positive means of closing, provided that the inboard valve:

- is above the deepest subdivision load line, and
- is always accessible for examination under service conditions.

8.6 Arrangement of discharges from spaces above the margin line

8.6.1 General

The provisions of this sub-article are applicable only to those discharges which remain open during the normal operation of the unit. For discharges which must necessarily be closed at sea, such as gravity drains from topside ballast tanks, a single screw-down valve operated from the deck may be accepted.

8.6.2 Normal arrangement

Normally, each separate discharge led though the shell plating from spaces above the margin line is to be provided with:

- one automatic non-return valve fitted with positive means of closing it from a position above the bulkhead or freeboard deck, or
- one automatic non-return valve and one sluice valve controlled from above the bulkhead or freeboard deck.

8.6.3 Alternative arrangement when the inboard end of the discharge pipe is above the summer waterline by more than 0,01 L

Where the vertical distance from the summer load waterline to the inboard end of the discharge pipe exceeds 0,01 L, the discharge may have two automatic non-return valves without positive means of closing, provided that:

- the inboard valve is above the level of the tropical load waterline so as to always be accessible for examination under service conditions, or
- where this is not practicable, a locally controlled sluice valve is interposed between the two automatic non-return valves.

8.6.4 Alternative arrangement when the inboard end of the discharge pipe is above the summer waterline by more than 0,02 L

Where the vertical distance from the summer load waterline to the inboard end of the discharge pipe exceeds 0,02 L, a single automatic non-return valve without positive means of closing may be accepted subject to the approval of the Society.

Note 1: This requirement is not applicable for surface floating gas units covered by NR542.

8.6.5 Arrangement of discharges through manned machinery spaces

Where sanitary discharges and scuppers lead overboard through the shell in way of manned machinery spaces, the fitting at the shell of a locally operated positive closing valve together with a non-return valve inboard may be accepted. The operating position of the valve will be given special consideration by the Society.

8.6.6 Arrangement of discharges through the shell more than 450 mm below the freeboard deck or less than 600 mm above the summer load waterline

Scupper and discharge pipes originating at any level and penetrating the shell either more than 450 millimetres below the freeboard deck or less than 600 millimetres above the summer load waterline are to be provided with a non-return valve at the shell. Unless required by [8.6.2] to [8.6.4], this valve may be omitted if the piping is of substantial thickness, as per Tab 27.

8.6.7 Arrangement of discharges through the shell less than 450 mm below the freeboard deck and more than 600 mm above the summer load waterline

Scupper and discharge pipes penetrating the shell less than 450 millimetres below the freeboard deck and more than 600 millimetres above the summer load waterline are not required to be provided with a non-return valve at the shell.

8.7 Summary table of overboard discharge arrangements

8.7.1 The various arrangements acceptable for scuppers and sanitary overboard discharges are summarised in Fig 3.

Figure 3 : Overboard discharge arrangement

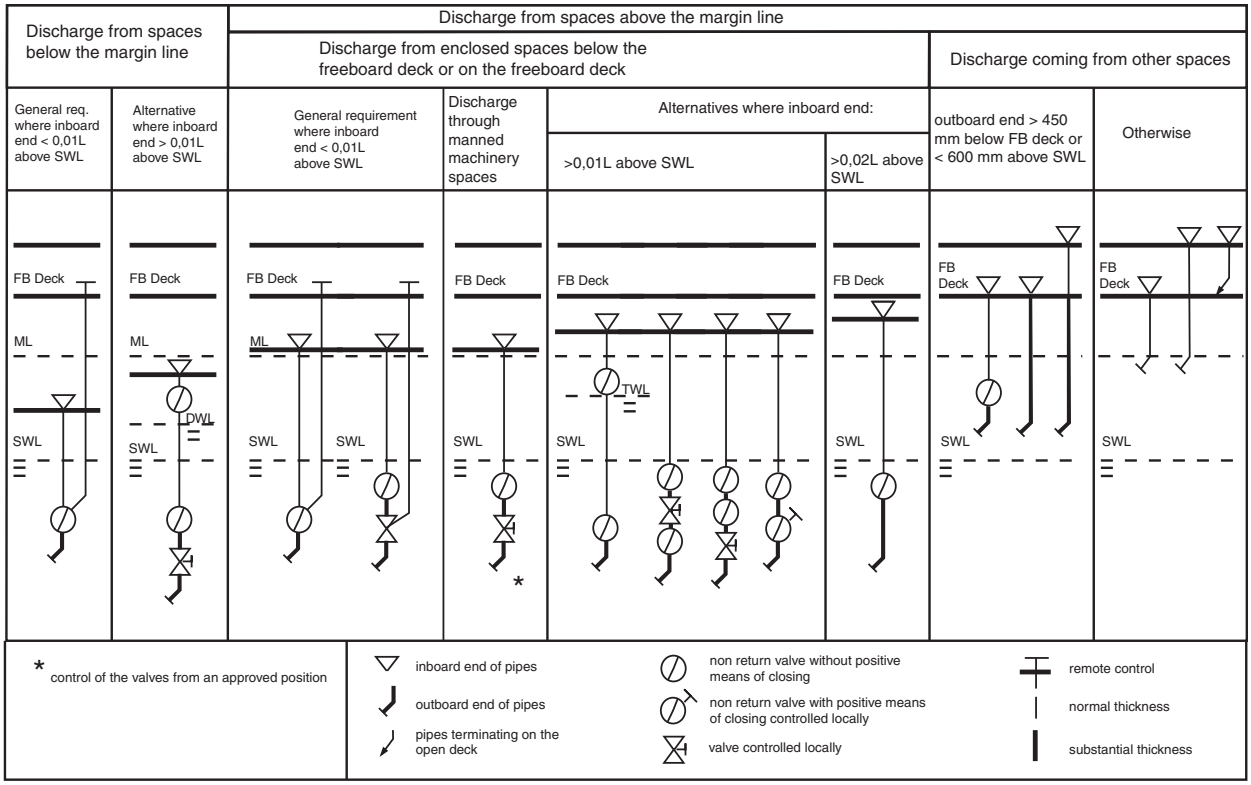

8.8 Valves and pipes

8.8.1 Materials

a) All shell fittings and valves are to be of steel, bronze or other ductile material. Valves of ordinary cast iron or similar material are not acceptable. All scupper and discharge pipes are to be of steel or other ductile material. Refer to [2.1].

b) Plastic is not to be used for the portion of discharge line from the shell to the first valve.

8.8.2 Thickness of pipes

a) The thickness of scupper and discharge pipes led to the bilge or to draining tanks is not to be less than that required in [2.2].

b) The thickness of scupper and discharge pipes led to the shell is not to be less than the minimum thickness given in Tab 26 and Tab 27.

Table 26 : Thickness of scupper and discharge pipes led to the shell, according to their location

Applicable requirement / Pipe location	[8.5.1]	[8.5.2]	[8.6.2]	[8.6.3]	[8.6.4]	[8.6.5]	[8.6.6] with valve	[8.6.6] without valve	[8.6.7]
Between the shell and the first valve	Thickness according to Tab 27, column 1, or 0,7 times that of the shell side plating, whichever is the greater **(1)**							NA	NA
Between the first valve and the inboard end	Thickness according to Tab 27, column 2							NA	NA
Below the freeboard deck	NA							Thickness according to Tab 27, column 1	Thickness according to Tab 27, column 2
Above the freeboard deck	NA							Thickness according to Tab 27, column 2	Thickness according to Tab 27, column 2

(1) However, this thickness is not required to exceed that of the plating.
Note 1: NA = not applicable.

Table 27 : Minimum thickness of scupper and discharge pipes led to the shell

External diameter of the pipe d (mm)	Column 1 substantial thickness (mm)**(1)**	Column 2 normal thickness (mm)
d ≤ 80,0	7,00	4,50
155	9,25	4,50
180	10,00	5,00
220	12,50	5,80
230 ≤ d	12,50	6,00

(1) For pipes connected to the shell below the freeboard deck, refer to minimum extra-reinforced wall thicknesses given in Tab 6.
Note 1: Intermediate sizes may be determined by interpolation.

8.8.3 Operation of the valves

a) Where valves are required to have positive means of closing, such means is to be readily accessible and provided with an indicator showing whether the valve is open or closed.

b) Where plastic pipes are used for sanitary discharges and scuppers, the valve at the shell is to be operated from outside the space in which the valve is located.

Where such plastic pipes are located below the summer waterline (timber summer load waterline), the valve is to be operated from a position above the freeboard deck.

Refer also to Ch 1, App 1.

8.9 Arrangement of scuppers and sanitary discharge piping

8.9.1 Overboard discharges and valve connections

a) Overboard discharges are to have pipe spigots extending through the shell plate and welded to it, and are to be provided at the internal end with a flange for connection to the valve or pipe flange.

b) Valves may also be connected to the hull plating in accordance with the provisions of [2.9.3], item c).

8.9.2 Passage through tanks

a) As a rule, scupper and sanitary discharge pipes are not to pass through fuel oil tanks.

b) Where scupper and discharge pipes pass unavoidably through fuel oil tanks and are led through the shell within the tanks, the thickness of the piping is not to be less than that given in Tab 27, column 1 (substantial thickness). It need not, however, exceed the thickness of the adjacent rule shell plating.

c) Scupper and sanitary discharge pipes are normally not to pass through fresh and drinking water tanks.

d) For passage through cargo oil tanks, see Pt D, Ch 1, Sec 18.

8.9.3 Passage through storage compartments other than tanks

Where scupper and sanitary discharge pipes are led through storage compartments other than tanks, the pipes and the valves with their controls are to be adequately protected by means of strong casings or guards.

8.9.4 Passage through watertight bulkheads or decks

a) The intactness of machinery space bulkheads and of tunnel plating required to be of watertight construction is not to be impaired by the fitting of scuppers discharging to machinery spaces or tunnels from adjacent compartments which are situated below the freeboard deck.

b) Such scuppers may, however, be led into a strongly constructed scupper drain tank situated in the machinery space or tunnel, but close to the above-mentioned adjacent compartments and drained by means of a suction of appropriate size led from the main bilge line through a screw-down non-return valve.

8.9.5 Discharge in refrigerated spaces

No scupper pipe from non-refrigerated spaces is to discharge in refrigerated spaces.

8.9.6 Discharge from galleys and their stores

Discharges from galleys and their stores are to be kept separate from other discharges and be drained overboard or in separate drainage tanks; alternatively, discharges are to be provided with adequate devices against odours and overflow.

8.9.7 Discharge from aft spaces

Where spaces located aft of the aft peak bulkhead not intended to be used as tanks are drained by means of scuppers discharging to the shaft tunnel, the provisions of [6.4.2] item c) are to be complied with.

8.9.8 Drainage from helidecks

Drainage facilities in way of helidecks shall be constructed of steel and shall lead directly overboard independent of any other system.

They are to be designed to prevent collections of liquids and liquids from spreading to or falling on other parts of the unit having regard to the use of fire fighting equipment and the possible spillage of fuel.

8.9.9 Scupper tank

a) The scupper tank air pipe is to be led to above the freeboard deck.

b) Provision is to be made to ascertain the level of water in the scupper tank.

9 Air, sounding and overflow pipes

9.1 Air pipes

9.1.1 Principle

Air pipes are to be fitted to all tanks, double bottoms, cofferdams, tunnels and other compartments which are not fitted with alternative ventilation arrangements, in order to allow the passage of air or liquid so as to prevent excessive pressure or vacuum in the tanks or compartments, in particular in those which are fitted with piping installations.

The open ends of the air pipes are to be so arranged as to prevent the free entry of sea water in the compartments.

With respect to the stability of the unit in damaged condition, all compartments having their air pipe open end located in a space assumed flooded are also to be considered flooded.

9.1.2 Number and position of air pipes

a) Air pipes are to be so arranged and the upper part of compartments so designed that air or gas likely to accumulate at any point in the compartments can freely evacuate.

b) Air pipes are to be fitted opposite the filling pipes and/or at the highest parts of the compartments, the unit being assumed to be on an even keel.

c) In general, two air pipes are to be fitted for each compartment, except in small compartments, where only one air pipe may be accepted. When the top of the compartment is of irregular form, the position of air pipes will be given special consideration by the Society.

Note 1: Two air vents are normally required for long tanks e.g. a ballast tank in a double hull unit.

In machinery spaces, two air vents are not normally required.

d) Where only one air pipe is provided, it is not to be used as a filling pipe.

9.1.3 Location of open ends of air pipes

a) Air pipes of double bottom compartments, tunnels, deep tanks and other compartments which can come into contact with the sea or be flooded in the event of hull damage are to be led to above the bulkhead deck or the freeboard deck.

Note 1: In units not provided with a double bottom, air pipes of small cofferdams or tanks not containing fuel oil or lubricating oil may discharge within the space concerned.

b) Air pipes of tanks intended to be pumped up are to be led to the open above the bulkhead deck or the freeboard deck.

c) Air pipes other than those of flammable oil tanks may be led to enclosed cargo spaces situated above the freeboard deck, provided that:
   - overflow pipes are fitted in accordance with [9.3.4], where the tanks may be filled by pumping
   - enclosed cargo spaces are fitted with scuppers discharging overboard and being capable of draining all the water which may enter through the air pipes without giving rise to any water accumulation
   - suitable drainage arrangement is to be fitted below the air pipe outlet, leading to the nearest scupper
   - such arrangement is not to impair integrity of fire divisions or watertight decks and bulkheads subject to the damage stability requirements.

d) The air pipe of the scupper tank is to be led to above freeboard deck.

e) The location of air pipes for flammable oil tanks is also to comply with [9.1.7].

9.1.4 Height of air pipes

a) The height of air pipes extending above the freeboard deck or superstructure deck from the deck to the point where water may have access below is to be at least:
   - 760 mm on the freeboard deck, and
   - 450 mm on the superstructure deck.

   This height is to be measured from the upper face of the deck, including sheathing or any other covering, up to the point where water may penetrate inboard.

b) Where these heights may interfere with the working of the unit, a lower height may be approved, provided the Society is satisfied that this is justified by the closing arrangements and other circumstances. Satisfactory means which are permanently attached are to be provided for closing the openings of the air pipes.

c) The height of air pipes may be required to be increased on units subject to damage stability requirements since the air pipe outlets should be above final water line at any damaged condition assumed by the Damage stability examination as defined in Pt B, Ch 1, Sec 3, [3].

d) The height of air pipes discharging through the side of the superstructure is to be at least 2,3 m above the summer load waterline.

9.1.5 Fitting of closing appliances

a) Satisfactory appliances which are permanently attached are to be provided for closing the openings of air pipes in order to prevent the free entry of water into the spaces concerned, except for pipes of tanks fitted with cross-flooding connections.

b) Automatic closing appliances are to be fitted in the following cases:
   - where air pipes to ballast and other tanks extend above the freeboard or superstructure decks
   - where, with the unit at its deepest load waterline, the openings are immersed at an angle of heel of 40° or, at the angle of down-flooding if the latter is less than 40°
   - where, as per [9.1.3] item c), air pipes terminate in enclosed spaces
   - where, as per [9.1.4] item b), air pipes have a height lower than that required in [9.1.4] item a).

   See also Pt B, Ch 1, Sec 3.

c) Automatic closing appliances are to be of a type approved by the Society. Requirements for type tests are given in [20.3].

d) For units subject to specific buoyancy or stability requirements, the fitting of closing appliances to air pipes will be given special consideration.

9.1.6 Design of closing appliances

a) When closing appliances are requested to be of an automatic type, they are to comply with the following:
   - They are to prevent free entry of water into the tanks.
   - They are to allow the passage of air or liquid to prevent excessive pressure or vacuum coming on the tank.
   - They are to be so designed that they withstand both ambient and working conditions up to an inclination of –40° to +40° without failure or damage.
   - They are to be so designed as to allow inspection of the closure and the inside of the casing as well as changing of the seals.
   - Where they are of the float type, suitable guides are to be provided to ensure unobstructed operation under all working conditions of heel and trim.
   - Efficient seating arrangements are to be provided for the closures.
   - They are to be self-draining.
   - The clear area through an air pipe closing appliance is to be at least equal to the area of the inlet.
   - The maximum allowable tolerances for wall thickness of floats is not to exceed ±10% of the nominal thickness.
   - Their casings are to be of approved metallic materials adequately protected against corrosion.
   - Closures and seats made of non-metallic materials are to be compatible with the media to be carried in the tank and with sea water at ambient temperatures between –25°C and +85°C.

b) Where closing appliances are not of an automatic type, provision is to be made for relieving vacuum when the tanks are being pumped out. For this purpose, a hole of approximately 10 mm in diameter may be provided in the bend of the air pipe or at any other suitable position in the closing appliance.

c) Wooden plugs and trailing canvas are not permitted in position 1 or position 2, as defined in Pt B, Ch 1, Sec 2 of the Ship Rules.

9.1.7 Special arrangements for air pipes of flammable oil tanks

a) Air pipes from fuel oil and thermal oil tanks are to discharge to a safe position on the open deck where no danger will be incurred from issuing oil or gases.

Where fitted, wire gauze diaphragms are to be of corrosion resistant material and readily removable for cleaning and replacement. The clear area of such diaphragms is not to be less than the cross-sectional area of the pipe.

b) Air pipes of lubricating or hydraulic oil storage tanks not subject to flooding in the event of hull damage may be led to machinery spaces, provided that in the case of overflowing the oil cannot come into contact with electrical equipment, hot surfaces or other sources of ignition.

c) Location and arrangement of vent pipes serving fuel oil tanks and lubrication tanks are to be done in a way providing protection against ingress of seawater or rain water in case of accidental vent pipes damage.

d) Air pipes of fuel oil service, settling and lubrication oil tanks likely to be damaged by impact forces are to be adequately reinforced.

e) Where seawater or rainwater may enter fuel oil service, settling and lubrication oil tanks through broken air pipes, arrangements such as water traps with:

- automatic draining, or
- alarm for water accumulation,

are to be provided.

9.1.8 Construction of air pipes

a) Where air pipes to ballast and other tanks extend above the freeboard deck or superstructure deck, the exposed parts of the pipes are to be of substantial construction, with a minimum wall thickness of at least:

- 6,0 mm for pipes of 80 mm or smaller external diameter
- 8,5 mm for pipes of 165 mm or greater external diameter.

Intermediate minimum thicknesses may be determined by linear interpolation.

b) Air pipes with height exceeding 900 mm are to be additionally supported.

c) In each compartment likely to be pumped up, and where no overflow pipe is provided, the total cross-sectional area of air pipes is not to be less than 1,25 times the cross-sectional area of the corresponding filling pipes.

d) The internal diameter of air pipes is not to be less than 50 mm, except for tanks of less than 2 m^3.

e) Air pipes from several tanks or spaces may be led into a common main line, provided that:

- The tanks or spaces are not intended for liquids which are not compatible and that the arrangement could not effect unacceptable condition for the unit.
- The cross-sectional area of the air pipes main is generally not less than the aggregate cross-sectional area of the two largest pipes discharging into the main. However, a reduced value may be considered for acceptance in each particular case on the basis of back pressure calculation submitted for all normal working conditions.
- As far as practical, each separate air pipe is fitted to the common air pipe from the top side.
- Where no overflow pipes are provided, the cross-sectional area of a common air pipe from several tanks is not less than 1,25 times the area of the common filling pipeline for these tanks.
- Where the tanks or spaces are situated at the shell side, the connections to the air pipes main are to be above the freeboard deck. Where it is not practical, different position proposed as far as possible above the deepest load waterline may be considered for acceptance. For vessels subject to damage stability requirements these connections should be above final water line at any damaged condition assumed by the Damage stability examination as defined in Pt B, Ch 1, Sec 3, [3].

f) Vents acting also as overflows may be accepted provided all the requirements applicable to both vents and overflows are complied with.

g) Where tanks are fitted with cross flooding connections, the air pipes are to be of adequate area for these connections.

9.2 Sounding pipes

9.2.1 Principle

a) Sounding devices are to be fitted to tanks intended to contain liquids as well as to all compartments which are not readily accessible at all times.

b) Void compartments adjacent to the sea or tanks containing liquids are to be fitted with separate sounding pipes or means to determine the liquid level in the tank.

Note 1: Void compartments which do not comply with the requirement of item b) are to be accounted for in the unit's stability analysis.

c) The requirement given in b) is also applicable for void compartments through which piping carrying liquids passes.

d) For compartments normally intended to contain liquids, the following systems may be accepted in lieu of sounding pipes:
- a level gauge of an approved type efficiently protected against shocks, or
- a remote level gauging system of an approved type, provided an emergency means of sounding is available in the event of failure affecting such system.

9.2.2 Position of sounding pipes

Sounding pipes are to be located as close as possible to suction pipes.

9.2.3 Termination of sounding pipes

a) As a general rule, sounding pipes are to end above the bulkhead deck or the freeboard deck in easily accessible places and are to be fitted with efficient, permanently attached, metallic closing appliances.

b) In machinery spaces and tunnels, where the provisions of item a) cannot be satisfied, short sounding pipes led to readily accessible positions above the floor and fitted with efficient closing appliances may be accepted.

9.2.4 Special arrangements for sounding pipes of flammable oil tanks

a) Where sounding pipes are used in flammable (except lubricating) oil systems, they are to terminate in the open air, where no risk of ignition of spillage from the sounding pipe might arise. In particular, they are not to terminate in passenger or crew spaces. As a general rule, they are not to terminate in machinery spaces. However, where the Society considers that this requirement is impracticable, it may permit termination in machinery spaces on condition that the following provisions are satisfied:
   1) in addition, an oil-level gauge is provided meeting the provisions of [2.10.2]
   2) the sounding pipes terminate in locations remote from ignition hazards unless precautions are taken, such as the fitting of effective screens, to prevent the fuel oil in the case of spillage through the terminations of the sounding pipes from coming into contact with a source of ignition
   3) the terminations of sounding pipes are fitted with self-closing blanking devices and with a small diameter self-closing control cock located below the blanking device for the purpose of ascertaining before the blanking device is opened that fuel oil is not present. Provision is to be made so as to ensure that any spillage of fuel oil through the control cock involves no ignition hazard.

b) For lubricating oil and fuel oil leakage tanks less than 2 m^3, the oil-level gauge mentioned in a) 1) and the control cock mentioned in a) 3) need not be provided on condition that the sounding pipes are fitted with appropriate means of closure.

c) Short sounding pipes may be used for tanks other than double bottom tanks without the additional closed level gauge provided an overflow system is fitted.

9.2.5 Closing appliances

a) Self-closing appliances are to be fitted with cylindrical plugs having counterweights such as to ensure automatic closing.

b) Closing appliances not required to be of the self-closing type may consist of a metallic screw cap secured to the pipe by means of a chain or a shut-off valve.

9.2.6 Construction of sounding pipes

a) Sounding pipes are normally to be straight. If it is necessary to provide bends in such pipes, the curvature is to be as small as possible to permit the ready passage of the sounding apparatus.

b) The sounding arrangement of compartments by means of bent pipes passing through other compartments will be given special consideration by the Society. Such an arrangement is normally accepted only if the compartments passed through are cofferdams or are intended to contain the same liquid as the compartments served by the sounding pipes.

c) Bent portions of sounding pipes are to have reinforced thickness and be suitably supported.

d) The internal diameter of sounding pipes is not to be less than 32 mm. Where sounding pipes pass through refrigerated spaces, or through the insulation of refrigerated spaces in which the temperature may be below 0°C, their internal diameter is to be at least 60 mm.

e) For mobile offshore drilling units, the internal diameter of sounding pipes is not to be less than 38 mm. Where a sounding pipe exceeds 20 m in length, the internal diameter is to be increased to at least 50 mm.

f) Doubling plates are to be placed under the lower ends of sounding pipes in order to prevent damage to the hull. When sounding pipes with closed lower ends are used, the closing plate is to have reinforced scantlings.

9.3 Overflow pipes

9.3.1 Principle

Overflow pipes are to be fitted to tanks:

- which can be filled by pumping and are designed for a hydrostatic pressure lower than that corresponding to the height of the air pipe, or
- where the cross-sectional area of air pipes is less than that prescribed in [9.1.8], item d).

9.3.2 Design of overflow systems

a) Overflow pipes are to be led:
   - either outside, or
   - in the case of fuel oil or lubricating oil, to an overflow tank of adequate capacity or to a storage tank having a space reserved for overflow purposes.

b) Where tanks containing the same or different liquids are connected to a common overflow system, the arrangement is to be such as to prevent any risk of:
   - intercommunication between the various tanks due to movements of liquid when emptying or filling, or, due to the inclination of the unit
   - overfilling of any tank from another assumed flooded due to hull damage.

   For this purpose, overflow pipes are to be led to a high enough point above the deepest load waterline or, alternatively, non-return valves are to fitted where necessary.

c) Arrangements are to be made so that a compartment cannot be flooded from the sea through the overflow in the event of another compartment connected to the same overflow main being bilged. To this end, the openings of overflow pipes discharging overboard are as a rule to be placed above the deepest load waterline and are to be fitted where necessary with non-return valves on the plating, or, alternatively, overflow pipes from tanks are to be led to a point above the deepest load waterline.

d) Where deep tanks which can be used to contain liquid or dry cargo or fuel oil are connected to a common overflow system, arrangements are to be made so that liquid or vapours from other compartments cannot enter such tanks when carrying dry cargo.

e) Where tanks alternately containing fuel oil and ballast water are connected to a common overflow system, arrangements are to be made to prevent the ballast water overflowing into the tanks containing fuel oil and vice-versa.

f) Additional requirements for units subject to damage stability checks are given in [5.6.3].

9.3.3 Overflow tanks

a) Overflow tanks are to have a capacity sufficient to receive the delivery of the pumps for at least 10 minutes.

b) Overflow tanks are to be fitted with an air pipe complying with [9.1] which may serve as an overflow pipe for the same tank. When the vent pipe reaches a height exceeding the design head of the overflow tank, suitable means are to be provided to limit the actual hydrostatic head on the tank.

   Such means are to discharge to a position which is safe in the opinion of the Society.

c) An alarm device is to be provided to give warning when the oil reaches a predetermined level in the tank, or alternatively, a sight-flow glass is to be provided in the overflow pipe to indicate when any tank is overflowing. Such sight-flow glasses are only to be placed on vertical pipes and in readily visible positions.

9.3.4 Specific arrangements for construction of overflow pipes

a) The internal diameter of overflow pipes is not to be less than 50 mm.

b) In each compartment which can be pumped up, the total cross-sectional area of overflow pipes is not to be less than 1,25 times the cross-sectional area of the corresponding filling pipes.

c) The cross-sectional area of the overflow main is not to be less than the aggregate cross-sectional area of the two largest pipes discharging into the main.

d) Where overflow sight glasses are provided, they shall be in a vertically dropping line on readily visible position, fitted with adequate protection from mechanical damage and well lit.

   The overflow sight glasses are not to be used in fuel oil systems.

   Use of the overflow sight glasses in lubricating oil systems may be accepted provided that:
   - they are so designed that oil does not impinge on the glass
   - the glass is to be of heat resisting quality.

   In manned machinery spaces of ships other than passenger ships, if it is justified that other technical solution would not be practical, acceptance of the overflow sight glasses in fuel oil systems shall be subject to special consideration by the Society in each particular case, taking into consideration the installation conditions and categorization of the space.

9.4 Constructional requirements applying to sounding, air and overflow pipes

9.4.1 Materials

a) Sounding, air and overflow pipes are to be made of steel or any other material approved for the application considered.

b) Exposed parts of sounding, air and overflow pipes are to be made of approved metallic materials.

9.4.2 Minimum thickness of steel pipes

The minimum thickness of sounding, air and overflow steel pipes is given in Tab 6.

9.4.3 Passage of pipes through certain spaces

a) Air pipes and sounding pipes led through refrigerated cargo holds or spaces are to be suitably insulated.

b) When sounding, air and overflow pipes made of steel are permitted to pass through ballast tanks or fuel oil tanks, they are to be of reinforced thickness, in accordance with Tab 6.

c) Sounding, air and overflow pipes passing through cargo holds are to be adequately protected.

9.4.4 Self-draining of pipes

Air pipes and overflow pipes are to be so arranged as to be self-draining when the unit is on an even keel.

9.4.5 Name plates

Nameplates are to be fixed at the upper part of air pipes and sounding pipes.

10 Cooling systems

10.1 Application

10.1.1 This Article applies to all cooling systems using the following cooling media:

- sea water
- fresh water
- lubricating oil.

Air cooling systems will be given special consideration.

10.2 Principle

10.2.1 General

Sea water and fresh water cooling systems are to be so arranged as to maintain the temperature of the cooled media (lubricating oil, hydraulic oil, charge air, etc.) for propulsion machinery and essential equipment within the manufacturers' recommended limits during all operations, under the inclination angles and the ambient conditions specified in Ch 1, Sec 1.

10.2.2 Availability of cooling systems

Each cooling system serving an essential equipment or installation is to be so designed that, in the event of one essential component of the system being inoperative, the cooling function is maintained. Partial reduction of operating capability of the equipment or installation may be accepted, however, when it is demonstrated that the safe operation of the unit is not impaired.

10.3 Design of sea water cooling systems

10.3.1 General

a) Sea water cooling of engines and other essential equipment is to be capable of being supplied by two different means.

b) Where required, standby pumps are not to be connected to the sea inlet serving the other sea water pumps, unless permitted under [10.7.1], item b).

10.3.2 Centralised cooling systems

a) In the case of centralised cooling systems, i.e. systems serving a group of engines, reduction gears, compressors and other essential equipment, the following sea water pumps and heat exchangers are to be arranged:
   - one main cooling water pump, which may be driven by the engines, of a capacity sufficient to provide cooling water to all the equipment served
   - one independently driven standby pump of at least the same capacity
   - two heat exchangers, each having at least 50% of the total capacity necessary to provide cooling water to all the equipment served.

b) Where the cooling system is served by a group of identical pumps, the capacity of the standby pump needs only to be equivalent to that of each of these pumps.

c) Ballast pumps or other suitable sea water pumps of appropriate capacity may be used as standby pumps, provided arrangements are made against overpressure in the cooling system.

d) In cases of centralised cooling systems serving only a group of auxiliary engines, the second means of cooling may consist of a connection to a cooling water pump serving another installation, provided such pump is of sufficient capacity to provide cooling water to both that installation and the auxiliary engines.

10.3.3 Individual cooling of auxiliary engines

Where each auxiliary engine is served by its own cooling circuit, no second means of cooling is required.

10.3.4 Cooling of steam plants

a) Steam plants are to be fitted with:
   - a main circulating pump
   - a standby pump capable of ensuring the circulation in the main condenser in the event of failure of the main circulating pump.

b) Where the installation includes more than one propulsive unit, the standby pump is not required, provided a branch pipe is fitted between the discharges of the circulating pumps of each unit.

c) In lieu of the main circulating pump, a sea inlet scoop system may be accepted, provided that an additional means is fitted to ensure the circulation of sea water to the condenser when the ship is manoeuvring. Such means may be:
   - an additional independent pump, or
   - a connection to an available pump of sufficient capacity.

10.3.5 Cooling of other essential equipment

a) The second means of cooling required in [10.3.1] for essential equipment may consist of a connection to a ballast pump or other suitable sea water pump of sufficient capacity, provided arrangements are made against overpressure in the cooling system (see [10.7.4], item b)).

b) However, where such essential equipment is duplicate, this second means may be omitted when justifications are provided as regards the operating capability of the unit with the cooling circuit of one set of equipment disabled.

10.4 Design of fresh water cooling systems

10.4.1 General

Fresh water cooling systems are to be designed according to the applicable requirements of [10.3].

10.4.2 Cooling systems

a) Fresh water cooling systems of essential equipment are to include at least:
   - one main cooling water pump, which can be driven by the equipment
   - one independently driven standby pump.

b) The standby pump may be omitted provided an emergency connection to a suitable sea water system is fitted and arranged with a suitable change-over device. Provisions against overpressure in the cooling system are to be made in accordance with [10.7.4], item b).

c) The standby pump may also be omitted in the case of redundancy of the cooled equipment.

10.4.3 Expansion tanks

Fresh water expansion tanks are to be provided with at least:

- a de-aerating device
- a water level indicator
- a filling connection
- a drain.

10.4.4 Protection of contamination by oil

Suitable means are to be provided in fresh water cooling systems comprising fuel oil or lubricating oil heat exchangers in order to detect any contamination of the water by fuel oil or lubricating oil.

If cooling water is used for heating of oil, the heating coils are to be located on the pressure side of the cooling pumps and connected by welding, with no detachable connections where mixing of oil and water may occur. Alternatively a primary and secondary system arrangement may be used.

10.5 Design of oil cooling systems

10.5.1 General

Oil cooling systems are to be designed according to the applicable requirements of [10.3].

10.5.2 Second means of cooling

The second means of cooling requested in [10.3.1] may consist of a satisfactory connection to a lubricating oil pump of sufficient capacity. Arrangements are to be made against overpressure in the cooling system.

10.6 Control and monitoring

10.6.1 Alarms are to be provided for water cooling systems in accordance with Tab 28, in addition to the requirements stated for diesel engines in Ch 1, Sec 2 and for steam plants in Ch 1, Sec 4.

Note 1: Some departures from Tab 28 may be accepted by the Society in the case of units operating in restricted zones.

Table 28 : Cooling systems

Symbol convention H = High, HH = High high, G = group alarm L = Low, LL = Low low, I = individual alarm X = function is required, R = remote	Monitoring		Automatic control				
			System			Auxiliary	
Identification of system parameter	Alarm	Indication	Slow-down	Shut-down	Control	Stand by Start	Stop
Sea water pump pressure or flow	L	local					
Fresh water pump pressure or flow	L	local					
Level in cooling water expansion tank	L	local					

10.7 Arrangement of cooling systems

10.7.1 Sea inlets

a) At least two sea inlets complying with [2.9] are to be provided for the cooling system, one for each means of cooling required in [10.3.1].

b) The two sea inlets may be connected by a cross-over supplying both main cooling pump and standby cooling pump.

c) When the second means of cooling is a spare pump, the two sea inlets are to be provided in any event, both serving the main cooling pump.

d) The sea inlets are to be low inlets, so designed as to remain submerged under all normal operating conditions.
In general, one sea inlet is to be arranged on each side of the unit.

e) One of the sea inlets may be that of the ballast pump or of the general service pump.

10.7.2 Coolers

a) Coolers are to be fitted with isolating valves at the inlets and outlets.

b) Coolers external to the hull (chest coolers and keel coolers) are to be fitted with isolating valves at the shell.

10.7.3 Filters

a) Where engines intended for essential services are directly cooled by sea water, both in normal service and in emergency operating conditions, filters are to be fitted on the suction of cooling pumps.

b) These filters are to be so arranged that they can be cleaned without interrupting the cooling water supply.

10.7.4 Pumps

a) Cooling pumps for which the discharge pressure may exceed the design pressure of the piping system are to be fitted with relief valves in accordance with [2.6].

b) Where general service pumps, ballast pumps or other pumps may be connected to a cooling system, arrangements are to be made, in accordance with [2.6], to avoid overpressure in any part of the cooling system.

10.7.5 Air venting

Cocks are to be installed at the highest points of the pipes conveying cooling water to the water jackets for venting air or gases likely to accumulate therein. In the case of closed fresh water cooling systems, the cock is to be connected to the expansion tank.

11 Fuel oil systems

11.1 Application

11.1.1 Scope

This Article applies to all fuel oil systems supplying any kind of installation.

The fuel oils used on board are to comply with Ch 1, Sec 1, [2.10].

11.1.2 Requirements applying to fuel oil systems and not contained in this Section

Additional requirements are given:

- for fuel oil supply equipment forming part of engines, gas turbines, boilers, thermal heaters and incinerators, in the corresponding sections
- for the installation of purifiers, in Part C, Chapter 4
- for the location and scantling of tanks forming part of the unit's structure, in Pt B, Ch 3, Sec 1 and Pt B, Ch 3, Sec 3.
- for helicopter refuelling facilities, in Ch 4, Sec 10, [4].

11.2 Principle

11.2.1 General

a) Fuel oil systems are to be so designed as to ensure the proper characteristics (purity, viscosity, pressure) of the fuel oil supply to engines and boilers.

b) Fuel oil systems are to be so designed as to prevent:
   - overflow or spillage of fuel oil from tanks, pipes, fittings, etc.
   - fuel oil from coming into contact with sources of ignition
   - overheating and seizure of fuel oil.

c) Fuel oils used for engines and boilers are to have a flashpoint complying with the provisions of Ch 1, Sec 1, [2.10].

11.2.2 Availability of fuel systems

a) Fuel oil systems are to be so designed that, in the event of one essential component of the system being inoperative, the fuel oil supply to boilers and engines can be maintained. Partial reduction of the operating capability may be accepted, however, when it is demonstrated that the safe operation of the unit is not impaired.

b) Fuel oil tanks are to be so arranged that, in the event of damage to any one tank, complete loss of the fuel supply to essential services does not occur.

c) Where engines and boilers are operated with heavy fuel oils, provisions are to be made to supply them with fuel oils which do not need to be heated.

11.3 General

11.3.1 Arrangement of fuel oil systems

Arrangements for the storage, distribution and utilisation of the fuel oil are to be such as to ensure the safety of the unit and persons on board.

The provisions of [5.11] are to be complied with.

11.3.2 Provision to prevent overpressure

Provisions are to be made to prevent overpressure in any oil tank or in any part of the fuel oil system. Any relief valve is to discharge to a safe position.

11.3.3 Ventilation

The ventilation of machinery spaces is to be sufficient under all normal conditions to prevent accumulation of oil vapour.

11.3.4 Access

Spaces where fuel oil is stored or handled are to be readily accessible.

11.4 Design of fuel oil filling and transfer systems

11.4.1 General

a) A system of pumps and piping for filling and transferring fuel oil is to be provided.

b) Provisions are to be made to allow the transfer of fuel oil from any storage, settling or service tank to another tank.

11.4.2 Filling systems

a) Filling pipes of fuel oil tanks are to terminate on open deck or in filling stations isolated from other spaces and efficiently ventilated. Suitable coamings and drains are to be provided to collect any leakage resulting from filling operations.

   The means are to be provided for the filling lines to prevent of possible overpressure during the bunkering operation, which could be caused by pumps from outboard filling station. For that purpose a warning label may be accepted with clearly declared design pressure of the filling lines and the local pressure gauge fitted in vicinity of the filling connection.

b) Arrangements are to be made to avoid overpressure in the filling lines which are served by pumps on board. Where safety valves are provided for this purpose, they are to discharge to the overflow tank referred to in [9.3.3] or to other safe positions deemed satisfactory.

11.4.3 Independence of fuel oil transfer lines

Except where permitted, the fuel oil transfer piping system is to be completely separate from the other piping systems of the unit.

11.4.4 Transfer pumps

a) At least two means of transfer are to be provided. One of these means is to be a power pump. The other may consist of:
   - a standby pump, or, alternatively
   - an emergency connection to another suitable power pump.

Note 1: Where provided, purifiers may be accepted as means of transfer.

b) Where necessary, transfer pumps are to be fitted on their discharge side with a relief valve leading back to the suction of the pump or to any other place deemed satisfactory.

11.5 Arrangement of fuel oil tanks and bunkers

11.5.1 Location of fuel oil tanks

a) No fuel oil tank is to be situated where spillage or leakage therefrom can constitute a hazard by falling on heated surfaces.

b) Fuel oil tanks and bunkers are not to be situated immediately above boilers or in locations where they could be subjected to high temperatures, unless specially agreed by the Society. In general, the distance between fuel oil tanks and boilers is not to be less than 450 mm. Where boilers are situated above double bottom fuel oil tanks, the distance between the double bottom tank top and the lower metallic part of the boilers is not to be less than:
   - 750 mm for water tube boilers
   - 600 mm for cylindrical boilers.

c) As far as practicable, fuel oil tanks are to be part of the unit's structure and are to be located outside machinery spaces of category A. Where fuel oil tanks, other than double bottom tanks, are necessarily located adjacent to or within machinery spaces of category A, at least one of their vertical sides is to be contiguous to the machinery space boundaries, and is preferably to have a common boundary with the double bottom tanks, and the area of the tank boundary common with the machinery spaces is to be kept to a minimum. Where such tanks are situated within the boundaries of machinery spaces of category A, they are not to contain fuel oil having a flashpoint of less than 60°C.

Note 1: Machinery spaces of category A are defined in Ch 4, Sec 1.

d) The location of fuel oil tanks is to be in compliance with the requirements of Pt B, Ch 3, Sec 1, particularly as regards the installation of cofferdams, the separation between fuel oil tanks or bunkers and the other spaces of the unit, and the protection of these tanks and bunkers against any abnormal rise in temperature.

11.5.2 Use of free-standing fuel oil tanks

a) In general the use of free-standing fuel oil tanks may be permitted in category A spaces.

b) For the design and the installation of independent tanks, refer to Pt B, Ch 2, Sec 3, [2.7] and Pt B, Ch 3, Sec 3, [4.1.10].

11.5.3 Protection against oil pollution in the event of collision or grounding

a) Application

The provisions of [11.5.3] apply to all FPSOs and FSUs with an aggregate oil fuel capacity of 600 m^3 and above. They apply to all oil fuel tanks except small oil fuel tanks with a maximum individual capacity not exceeding 30 m^3, provided that the aggregate capacity of such excluded tanks is not greater than 600 m^3.

Note 1: For the purpose of application of this requirement, oil fuel means any oil used as fuel oil in connection with the machinery of the unit in which such oil is carried.

Note 2: The provisions of this requirement apply to oil fuel overflow tanks except if they are provided with an alarm for detection of oil and kept empty according to the operational procedures.

b) Maximum capacity of oil fuel tanks

Individual oil fuel tanks are not to have a capacity of over 2500 m^3.

c) Oil fuel tank protection

For units having an aggregate oil fuel capacity of 600 m^3 and above, oil fuel tanks are to be located at a sufficient distance from the bottom shell plating and from the side shell plating in accordance with the relevant provisions of MARPOL 73/78, Annex I, Regulation 12A.

Note 3: For units whose double bottom oil fuel tanks are kept empty when undertaking any voyage away from the operating station for whatever purpose, the requirement for the minimum distance between such tanks and the bottom shell plating may not be applied.

d) Suction wells

Suction wells in oil fuel tanks may protube in the double bottom provided that the conditions stated in MARPOL73/78, Annex I, Regulation 12A.10 are satisfied.

e) Valves

Lines of fuel oil piping located at a distance from the unit's bottom or from the unit's side less than those referred to in item c) are to be fitted with valves or similar closing devices within, or immediately adjacent to the oil fuel tank. These valves are to be capable of being brought into operation from a readily accessible enclosed space the location of which is accessible from the machinery control position without traversing exposed freeboard or superstructure decks. The valves are to be closed in case of remote control system failure and at sea at any time when the tank contains oil fuel, except during oil fuel transfer operations.

11.6 Design of fuel oil tanks and bunkers

11.6.1 General

Tanks such as collector tanks, de-aerator tanks etc. are to be considered as fuel oil tanks for the purpose of application of this sub-article, and in particular regarding the valve requirements.

Tanks with a volume lower than 500 l will be given special consideration by the Society.

11.6.2 Scantlings

a) The scantlings of fuel oil tanks and bunkers forming part of the unit's structure are to comply with the requirements stated in Part B, Chapter 3.

b) Scantlings of fuel oil tanks and bunkers which are not part of the unit's structure are to comply with Part B, Chapter 3. For cases which are not contained in the Tables of that appendix, scantlings will be given special consideration by the Society.

11.6.3 Filling and suction pipes

a) All suction pipes from fuel oil tanks and bunkers, including those in the double bottom, are to be provided with valves.

b) For storage tanks, filling pipes may also be used for suction purposes.

c) For fuel oil tanks which are situated higher than the double bottom tanks, the filling pipes which are connected to the tank at a point lower than the outlet of the overflow pipe, or below the top of tanks without an overflow pipe, are to be fitted with shut-off non-return valves, unless they are fitted with valves arranged in accordance with the requirements stated in [11.6.4]. For filling lines entering at the top of a tank and with inside extension towards the bottom, airholes shall be drilled in the pipe near the penetration in order to avoid the siphoning effect.

d) For oil piping which is led through engine room bulkheads, shut-off valves are to be fitted in the engine room on the bulkhead, or close to.

e) The valves requested in a), c) and d) are to be located on the tank or bulkhead itself. However, short distance pieces of rigid construction may be accepted, the length of which is not to exceed about 1,5 D of the pipe.

11.6.4 Remote control of valves

a) Every fuel oil pipe which, if damaged, would allow oil to escape from a storage, settling or daily service tank having a capacity of 500 l and above situated above the double bottom, is to be fitted with a cock or valve directly on the tank capable of being closed from a safe position outside the space in which such tanks are situated in the event of a fire occurring in such space.

Note 1: For the location of the remote controls, refer to [11.11.3], item c).

b) Such valves and cocks are also to include local control. Indicators are to be provided on the remote and local controls to show whether they are open or shut (see [2.8.3]). Where quick-closing valves are used, the indicators for remote controls may be omitted.

c) Where fuel oil tanks are situated outside boiler and machinery spaces, the remote control required in item a) may be transferred to a valve located inside the boiler or machinery spaces on the suction pipes from these tanks.

d) In the special case of deep tanks situated in any shaft or pipe tunnel or similar space, valves are to be fitted on the tank but control in the event of fire may be effected by means of an additional valve on the pipe or pipes outside the tunnel or similar space. If such additional valve is fitted in the machinery space it is to be operated from a position outside this space.

Note 2: For non-propelled units where the fuel oil transfer installation is designed for manual operation, suction valves from fuel oil tanks and bunkers, with the exception of daily service tanks, need not be arranged with remote controls provided they are maintained closed except during transfer operations. Such valves are, however, to be readily accessible and instruction plates are to be fitted in their vicinity specifying that they are to be kept closed except during transfer operations.

11.6.5 Drain pipes

Where fitted, drain pipes are to be provided with self-closing valves or cocks.

11.6.6 Air and overflow pipes

Air and overflow pipes are to comply with [9.1] and [9.3].

11.6.7 Sounding pipes and level gauges

a) Safe and efficient means of ascertaining the amount of fuel oil contained in any fuel oil tank are to be provided.

b) Sounding pipes of fuel oil tanks are to comply with the provisions of [9.2].

c) Oil-level gauges complying with [2.10.2] may be used in place of sounding pipes.

d) Gauge cocks for ascertaining the level in the tanks are not to be used.

11.7 Design of fuel oil heating systems

11.7.1 General

a) Where heavy fuel oil is used, a suitable heating system is to be provided for storage tanks, settling tanks and service tanks in order to ensure that the fuel oil has the correct fluidity and the fuel pumps operate efficiently.

b) Where necessary for pumping purposes, storage tanks containing heavy fuel oil are to be provided with heating systems.

c) Where necessary, pumps, filters, pipes and fittings are to be provided with heat tracing systems.

d) Where main or auxiliary engines are supplied with fuel oil which needs to be heated, arrangements are to be made so that the engines can still operate if one oil heating system or the heating power source is out of action. Such arrangements may consist of an alternative supply of the engines in accordance with [11.9.2].

11.7.2 Tank heating systems

a) Oil fuel in storage tanks are not to be heated to temperatures within 10°C below the flashpoint of the fuel oil, except that, where oil fuel in service tanks, settling tanks and any other tanks in supply system is heated, the following arrangements are to be provided:
   - the length of the vent pipes from such tanks and/or a cooling device is sufficient for cooling the vapours to below 60°C, or the outlet of the vent pipes is located 3 m away from a source of ignition
   - the vent pipes are fitted with flame screens
   - there are no openings from the vapour space of the fuel tanks into machinery spaces (bolted manholes are acceptable)
   - enclosed spaces are not to be located directly over such fuel tanks, except for vented cofferdams
   - electrical equipment is not to be fitted in the vapour space of the tanks, unless it is certified to be intrinsically safe.

b) The temperature of the heating medium is not to exceed 220°C.

c) Automatic control sensors are to be provided for each heated tank to maintain the temperature of the fuel oil below the limits prescribed in item a).

   For storage tanks, the manual control may be accepted subject to special consideration by the Society in each case.

d) Heated tanks are to be provided with temperature measuring systems.

e) The heating coils inlet and outlet connections at the tank are to be fitted with suitable means for closing. For steam heating coils, additional means are to be provided between tank outlet and closing device to enable testing the condensate for presence of oil.

   Heating pipes and coils inside the tanks are to be of material suitable for the heated fluid.

   For steel pipes, the thickness is not to be less than the values given in column 4, with footnote (4), of Tab 6.

   The heating coils within the tanks are to have welded connections and are to be supported in such a way that they are not subject to non permissible stress due to vibration or thermal extension.

11.7.3 Fuel oil heaters

a) Where steam heaters or heaters using other heating media are provided in fuel oil systems, they are to be fitted with at least a high temperature alarm or a low flow alarm in addition to a temperature control, except where temperatures dangerous for the ignition of the fuel oil cannot be reached.

b) Electric heating of fuel oil is to be avoided as far as practicable.

c) However, when electric heaters are fitted, means are to be provided to ensure that heating elements are permanently submerged during operation. In all cases a safety temperature switch is to be fitted in order to avoid a surface temperature of 220°C and above. It is to be:
   - independent from the automatic control sensor
   - designed to cut off the electrical power supply in the event of excessive temperature
   - provided with manual reset.

d) Fuel oil heaters are to be fitted with relief valves leading back to the pump suction concerned or to any other place deemed satisfactory.

11.8 Design of fuel oil treatment systems

11.8.1 General

a) Heavy fuel oils used in diesel engines are to be purified and filtered according to the engine manufacturer's requirements.

b) Provisions are to be made to avoid inadvertent entry of non-purified heavy fuel into the daily service tanks, in particular through the overflow system.

11.8.2 Drains

a) Settling tanks or, where settling tanks are not provided, daily service tanks, are to be provided with drains permitting the evacuation of water and impurities likely to accumulate in the lower part of such tanks.

b) Efficient means are to be provided for draining oily water escaping from the drains.

11.8.3 Purifiers

a) Where fuel oil needs to be purified, at least two purifiers are to be installed on board, each capable of efficiently purifying the amount of fuel oil necessary for the normal operation of the engines.

Note 1: On units operating in restricted zones, one purifier only may be accepted.

b) Subject to special consideration by the Society, the capacity of the standby purifier may be less than that required in a), depending on the arrangements made for the fuel oil service tanks to satisfy the requirement in [11.9.2].

c) The standby purifier may also be used for other services.

d) Each purifier is to be provided with an alarm in case of failures likely to affect the quality of the purified fuel oil.

e) Fuel oil purifiers are to be installed as required in Part C, Chapter 4.

11.9 Design of fuel supply systems

11.9.1 General

a) In units where heavy fuel oil and marine diesel oil are used, a change-over system from one fuel to the other is to be provided. This system is to be so designed as to avoid:
   - overheating of marine diesel oil
   - inadvertent ingress of heavy fuel oil into marine diesel oil tanks.

b) When necessary, arrangements are to be made for cooling the marine diesel oil from engine return lines.

11.9.2 Fuel oil service tanks

a) The oil fuel service tank is an oil fuel tank which contains only the required quality of fuel ready for immediate use.

b) In general, two fuel oil service tanks for each type of fuel used on board necessary for propulsion and vital systems, or equivalent arrangements, are to be provided. Each tank is to have a capacity of at least 8 h at maximum continuous rating of the propulsion plant and normal operating load at sea of the generator plant.

c) For "one fuel ship", where main and auxiliary engines and boiler(s) are operated with Heavy Fuel Oil (HFO), the arrangements complying with this regulation or acceptable "equivalent arrangements" shall be provided.

   The arrangements complying with this regulation shall comprise at least the following tanks:
   - two (2) HFO service tanks, each of a capacity sufficient for at least 8 h operation of main engine(s), auxiliary engines and auxiliary boiler(s), and
   - one (1) Marine Diesel Oil (MDO) service tank for initial cold starting or repair work of engines or boilers.

   Acceptable "equivalent arrangements" shall comprise at least:
   - one (1) HFO service tank with a capacity sufficient for at least 8 h operation of main engine(s), auxiliary engines and auxiliary boiler(s), and
   - one (1) MDO service tank with a capacity sufficient for at least 8 h operation of main engine(s), auxiliary engines and auxiliary boiler(s), and
   - for pilot burners of auxiliary boilers, if provided, an additional MDO service tank for 8 h may be required.

   This arrangement only applies where main and auxiliary engines can operate with HFO under all load conditions and, in the case of main engines, during manoeuvring.

d) Where main engines and auxiliary boiler(s) are operated with Heavy Fuel Oil (HFO) and auxiliary engines are operating with Marine Diesel Oil (MDO), the arrangements complying with this regulation or acceptable "equivalent arrangements" shall be provided.

   The arrangements complying with this regulation shall comprise at least the following tanks:
   - two (2) HFO service tanks, each of a capacity sufficient for at least 8 h operation of main engine(s) and auxiliary boiler(s), and
   - two (2) MDO service tanks each of a capacity sufficient for at least 8 h operation of auxiliary engines.

   Acceptable "equivalent arrangements" shall comprise at least:
   - one (1) HFO service tank with a capacity sufficient for at least 8 h operation of main engine(s) and auxiliary boiler(s), and
   - two (2) MDO service tanks, each of a capacity sufficient for:
     - 4 h operation of main engine(s), auxiliary engines and auxiliary boiler(s), or
     - 8 h operation of auxiliary engines and auxiliary boiler(s).

e) The "equivalent arrangements" in items c) and d) apply, provided the propulsion and vital systems using two types of fuel support rapid fuel change over and are capable of operating in all normal operating conditions at sea with both types of fuel (MDO and HFO).

f) The arrangement of oil fuel service tanks is to be such that one tank can continue to supply oil fuel when the other is being cleaned or opened up for repair.

g) The use of a setting tank with or without purifiers, or purifiers alone, and one service tank is not acceptable as an "equivalent arrangement" to two service tanks.

Note 1: This requirement [11.9.2] need not be applied to small units operating in restricted zones or non-propelled units.

11.9.3 Fuel oil supply to boilers

a) In units where boilers burning oil under pressure are installed to supply steam to the machinery serving essential services, the fuel oil supply system is to include at least the following equipment:
   - Two independently driven fuel oil service pumps, each one of a capacity sufficient to supply the boilers at their rated output. The pumps are to be arranged such that one may be overhauled while the other is in service.
   - Filters or strainers fitted on the suction lines and so arranged that they can be cleaned without interrupting the fuel supply. For that purpose, two filters or strainers fitted in parallel, or one duplex type with a change over facility, may be accepted.
   - Two heaters in the case that fuel oil heating is required, each one of a capacity sufficient to supply heated fuel oil to the boilers at their normal operating capacity. The heaters are to be arranged such that one may be overhauled while the other is in service.

b) The fuel oil supply system is to be capable of supplying the fuel oil necessary to generate enough steam for the essential services of the unit with one pump, one heater or one filter out of action.

c) A quick-closing valve is to be provided on the fuel supply to the burners of each boiler, arranged to be easily operated in case of emergency, either directly or by remote control.

d) The fuel supply to the burners is to be capable of being automatically cut off when required under Ch 1, Sec 3, [5.1.8].

e) Burners are to comply with Ch 1, Sec 3, [2.2.5].

f) Where burners are provided with fuel oil flow-back to the pump suctions or other parts under pressure, non-return devices are to be provided to prevent fuel oil from flowing back to the burners when the oil supply is cut off.

g) For the starting-up of boilers, an auxiliary fuel oil unit not requiring power from shore is to be provided.

h) Where fuel oil is supplied to the burners by gravity, a double filter satisfying the provisions of item a) is to be provided in the supply line.

i) Fuel oil supply systems are to be entirely separate from feed, bilge, ballast and other piping systems.

11.9.4 Fuel oil supply to internal combustion engines

a) The suctions of engine fuel pumps are to be so arranged as to prevent the pumping of water and sludge likely to accumulate after decanting at the lower part of service tanks.

b) Single internal combustion engines intended for essential services are to be fitted with at least two filters, or similar devices, so arranged that one of the filters can be overhauled while the other is in use.

Note 1: Where the engine has an output not exceeding 375 kW, the second filter may be replaced by a readily accessible and easily replaceable spare filter.

c) Oil filters fitted in parallel are to be so arranged as to minimise the possibility of a filter under pressure being opened by mistake.

   Filter chambers are to be provided with suitable means for:
   - ventilating when put into operation
   - de-pressurising before being opened.

   Valves or cocks used for this purpose are to be fitted with drain pipes led to a safe location.

d) Oil filters are to be so located that in the event of a leakage the fuel oil cannot be pulverised onto the exhaust manifold.

e) Where the engine fuel oil supply system is arranged with booster pumps, a standby pump connected ready for immediate use is to be provided.

   The standby pump may be replaced by a complete spare pump of appropriate capacity ready to be connected, in the following cases:
   - where two or more engines are fitted, each with its own booster pump
   - where the engine output does not exceed 375 kW.

f) Where fuel oils require pre-heating in order to have the appropriate viscosity when being injected in the engine, the following equipment is to be provided in the fuel oil line:
   - one viscosity control and monitoring system
   - two pre-heaters, one serving as a standby for the other.

g) Excess fuel oil from pumps or injectors is to be led back to the service or settling tanks, or to other tanks intended for this purpose.

h) De-aeration tanks fitted in pressurised fuel oil return lines are to be equipped with at least:
   - an automatic venting valve or equivalent device discharging to the daily service tank or to other safe place deemed satisfactorily having a device for flow detection.
   - a non-return valve in the return line from the engines.

i) For high pressure fuel oil pipes and other components which may be built-in or attached to the engine, see Ch 1, Sec 2, [2.5].

   Anyhow, the components of a diesel engine fuel oil system are to be designed considering the maximum peak pressure which will be experienced in service, including any high pressure pulses which are generated and transmitted back into the fuel supply and spill lines by the action of fuel injection pumps.

j) Connections within the fuel supply and spill lines are to be constructed having regard to their ability to prevent pressurised fuel oil leaks while in service and after maintenance.

k) In multi-engine installations which are supplied from the same fuel source, means of isolating the fuel supply and spill piping to individual engines are to be provided. The means of isolation shall not affect the operation of the other engines and shall be operable from a position not rendered inaccessible by a fire on any of the engines.

11.10 Helicopter refuelling facilities

11.10.1 Storage area

a) A designated area is to be provided for the storage of fuel tanks which are to be:
- as remote as practicable from accommodation spaces, escape routes and embarkation stations, and
- isolated from areas containing a source of vapour ignition, and
- permanently marked.

b) The fuel storage area is to be provided with arrangements whereby fuel spillage may be collected and drained to a safe location.

c) Vent heads of an approved type with flame arresters are to be fitted to vent pipes arranged in the storage area.

11.10.2 Fuel tanks

a) Tanks and associated equipment are to be protected against physical damage and from a fire in an adjacent space or area.

b) Where portable fuel storage tanks are used, special attention is to be given to:
1) design of the tank for its intended purpose
2) mounting and securing arrangements
3) electric bonding, and
4) inspection procedures.

11.10.3 Fuel pumping

a) Storage tank fuel pumps are to be provided with means which permit shutdown from a safe remote location in the event of a fire. Where a gravity fuelling system is installed, equivalent closing arrangements are to be provided to isolate the fuel source.

b) The fuel pumping unit is to be connected to one tank at a time. The piping between the tank and the pumping unit is to be of steel or equivalent material, as short as possible, and protected against damage.

c) Electrical fuel pumping units and associated control equipment shall be of a type suitable for the location and potential hazards

d) Fuel pumping units shall incorporate a device which will prevent over-pressurization of the delivery or filling hose.

11.10.4 Refuelling equipment

Equipment used in refuelling operations is to be electrically bonded.

11.11 Control and monitoring

11.11.1 Monitoring

Alarms and safeguards are to be provided for fuel oil systems in accordance with Tab 29.

Note 1: Some departures from Tab 29 may be accepted by the Society in the case of units operating in restricted zones.

11.11.2 Automatic controls

Automatic temperature control is to be provided for:
- steam heaters or heaters using other media
- electric heaters.

11.11.3 Remote controls

a) The remote control arrangement of valves fitted on fuel oil tanks is to comply with [11.6.4].

b) The power supply to:
- fuel oil burning pumps
- transfer pumps and other pumps of the fuel oil system, and
- fuel oil purifiers,

is to be capable of being stopped from a position within the space containing the pumps and from another position located outside such space and always accessible in the event of fire within the space.

c) Remote control of the valve fitted to the emergency generator fuel tank is to be in a separate location from that of other valves fitted to tanks in the engine room.

d) The positions of the remote controls are also to comply with Part C, Chapter 3.

Table 29 : Fuel oil systems

Symbol convention H = High, HH = High high, G = group alarm L = Low, LL = Low low, I = individual alarm X = function is required, R = remote	Monitoring		Automatic control				
			System			Auxiliary	
Identification of system parameter	Alarm	Indication	Slow-down	Shut-down	Control	Stand by Start	Stop
Fuel oil overflow tank level	H(**1**)						
Air pipe water trap level on fuel oil tanks	H(**2**)						
Fuel oil temperature after heaters	H(**3**)	local		X(**4**)			
Sludge tank level		local					
Fuel oil settling tank and service tank temperature	H(**2**)	local					
Fuel oil level in daily service tank	L+H(**1**)	local					
Fuel oil daily service tank temperature	H(**2**)	local					

(1) Or sightglasses on the over flow pipe.
(2) Applicable where heating arrangements are provided.
(3) Or low flow alarm in addition to temperature control when heated by steam or other media.
(4) Cut off of electrical power supply when electrically heated.

11.12 Construction of fuel oil piping systems

11.12.1 Materials

a) Fuel oil pipes and their valves are to be of steel or other approved material as mentioned in Tab 5.

Flexible pipes may be accepted provided they comply with [2.7.4].

b) Internal galvanisation of fuel oil pipes and tank or bunker walls is to be avoided.

11.12.2 Pipe thickness

The thickness of pipes conveying heated fuel oil, as well as their flanges, is to be calculated for a design pressure determined in accordance with Tab 4.

11.12.3 Pipe connections

a) Connections and fittings of pipes containing fuel oil are to be suitable for a design pressure according to Tab 3 and Tab 4.

b) Connections of pipes conveying heated fuel oil are to be made by means of close-fitting flanges, with joints made of a material impervious to oil heated to 160°C and as thin as possible.

11.13 Arrangement of fuel oil piping systems

11.13.1 Passage of fuel oil pipes through tanks

a) Fuel pipes are not to pass through tanks containing boiler feed water, fresh water or flammable oil, unless they are contained within tunnels.

b) Transfer pipes passing through ballast tanks are to have a reinforced thickness complying with Tab 6.

11.13.2 Passage of pipes through fuel oil tanks

Boiler feed water, fresh water or flammable oil pipes are not to pass through fuel oil tanks, unless such pipes are contained within tunnels.

11.13.3 Segregation of fuel oil purifiers

Purifiers for heated fuel oil are to be in accordance with Ch 4, Sec 6, [5.1.2].

12 Lubricating oil systems

12.1 Application

12.1.1 This Article applies to lubricating oil systems serving diesel engines, steam and gas turbines, reduction gears, clutches and controllable pitch propellers, for lubrication or control purposes.

12.2 Principle

12.2.1 General

a) Lubricating oil systems are to be so designed as to ensure reliable lubrication of the engines, turbines and other equipment, including electric motors, intended for propulsion:
   - over the whole speed range, including starting, stopping and, where applicable, manoeuvring
   - for all the inclinations angles stated in Ch 1, Sec 1.

b) Lubricating oil systems are to be so designed as to ensure sufficient heat transfer and appropriate filtration of the oil.

c) Lubricating oil systems are to be so designed as to prevent oil from entering into contact with sources of ignition.

12.2.2 Availability

a) Lubricating oil systems are to be so designed that, in the event that any one pump is inoperative, the lubrication of the engine and other equipment is maintained. Partial reduction of the operating capability of the engine or equipment may be accepted, however, when it is demonstrated that the safe operation of the unit is not impaired.

b) An emergency lubricating system, such as a gravity system, is to be provided to ensure sufficient lubrication of equipment which may be damaged due to a failure of the pump supply.

12.3 General

12.3.1 Arrangement of lubricating oil systems

a) The arrangements for the storage, distribution and utilisation of oil used in pressure lubrication systems are to be such as to ensure the safety of the unit and persons on board.

b) The provisions of [5.11] are to be complied with, where applicable.

12.3.2 Filtration

a) In forced lubrication systems, a device is to be fitted which efficiently filters the lubricating oil in the circuit.

b) The filters provided for this purpose for essential machinery are to be so arranged that they can be easily cleaned without stopping the lubrication of the machines.

c) The fineness of the filter mesh is to comply with the requirements of the engine or turbine manufacturers.

d) Where filters are fitted on the discharge side of lubricating oil pumps, a relief valve leading back to the suction or to any other convenient place is to be provided on the discharge of the pumps.

12.3.3 Purification

Where provided, lubricating oil purifiers are to comply with [11.8.3].

12.3.4 Heat transfer

Lubricating oil heaters are to comply with [11.7.3].

12.4 Design of engine lubricating oil systems

12.4.1 Lubrication of engines

a) Engines intended for essential services are to be provided with at least two power lubricating pumps, of such a capacity as to maintain normal lubrication with any one pump out of action.

b) In the case of installations comprising:
   - more than one engine, each with its own lubricating pump, or
   - one engine with an output not exceeding 375 kW,

   one of the pumps mentioned in a) may be a spare pump ready to be connected to the lubricating oil system, provided disassembling and reassembling operations can be carried out on board in a short time.

12.4.2 Lubrication of engines intended for non-essential services

For engines intended for non-essential services, a single lubricating pump is acceptable.

12.5 Design of steam turbine lubrication systems

12.5.1 General

An alarm device is to be provided giving audible warning in the event of damage or of an appreciable reduction of the oil pressure.

12.5.2 Lubrication of propulsive turbines and turbogenerators

a) Turbines intended for essential services are to be provided with:
   - one main lubricating pump, and
   - one independently driven standby pump of at least the same capacity.

b) The standby pump is to be capable of supplying satisfactory lubrication to the turbines during starting and stopping operations.

c) Lubricating systems serving turbines intended for essential services are to be provided with a device which stops the steam supply to the turbines (see [12.7.1]).

12.5.3 Emergency lubrication of turbines intended for essential services

a) Turbines intended for essential services are to be provided with an emergency lubricating system arranged for automatic start (see [12.7.1]).

b) When a gravity system is provided for the purpose of item a), it is to ensure an adequate lubrication for not less than 6 minutes and, in the case of turbogenerators, for a period at least equal to the stopping period after unloading.

c) When the emergency supply is fulfilled by means of an emergency pump, it is to be so arranged that its operation is not affected by a failure of the power supply.

d) Suitable arrangements for cooling the bearings after stopping may also be required.

12.5.4 Lubrication of auxiliary turbines intended for essential services

a) Auxiliary turbines intended for essential services are to be provided with:
   - one main lubricating pump, and
   - one independently driven standby pump of at least the same capacity.

b) The standby pump is to be capable of supplying satisfactory lubrication to the turbines during starting and stopping operations.

12.6 Design of lubricating oil tanks

12.6.1 Remote control of valves

Lubricating oil tanks with a capacity of 500 litres and above are to be fitted with remote controlled valves in accordance with the provisions of [11.6.4].

The remote controlled valves need not be arranged for storage tanks on which valves are normally closed except during transfer operation, or where it is determined that an unintended operation of a quick closing valve on the oil lubricating tank would endanger the safe operation of the main propulsion and essential auxiliary machinery.

12.6.2 Filling and suction pipes

Filling and suction pipes are to comply with the provisions of [11.6.3].

12.6.3 Air and overflow pipes

Air and overflow pipes are to comply with the provisions of [9.1] and [9.3].

12.6.4 Sounding pipes and level gauges

a) Safe and efficient means of ascertaining the amount of lubricating oil contained in the tanks are to be provided.

b) Sounding pipes are to comply with the provisions of [9.2].

c) Oil-level gauges complying with [2.10.2] may be used in place of sounding pipes.

d) Gauge cocks for ascertaining the level in the tanks are not to be used.

12.6.5 Oil collecting tanks for engines

a) In surface units required to be fitted with a double bottom, wells for lubricating oil under main engines may be permitted by the Society provided it is satisfied that the arrangements give protection equivalent to that afforded by a double bottom complying with Pt D, Ch 1, Sec 3, [10].

b) Where, in surface units required to be fitted with a double bottom, oil collecting tanks extend to the outer bottom, a valve is to be fitted on the oil drain pipe, located between the engine sump and the oil drain tank. This valve is to be capable of being closed from a readily accessible position located above the working platform.

   Alternative arrangements will be given special consideration.

c) Oil collecting pipes from the engine sump to the oil collecting tank are to be submerged at their outlet ends.

12.7 Control and monitoring

12.7.1 In addition to the requirements in:

- Ch 1, Sec 2 for diesel engines
- Ch 1, Sec 4 for steam turbines
- Ch 1, Sec 5 for gas turbines, and
- Ch 1, Sec 6 for gears,

alarms are to be provided for lubricating oil systems in accordance with Tab 30.

Note 1: Some departures from Tab 30 may be accepted by the Society in the case of units operating in restricted zones.

Table 30 : Lubricating oil systems

Symbol convention H = High, HH = High high, G = group alarm L = Low, LL = Low low, I = individual alarm X = function is required, R = remote	Monitoring		Automatic control				
			System			Auxiliary	
Identification of system parameter	Alarm	Indication	Slow-down	Shut-down	Control	Stand by Start	Stop
Air pipe water trap level of lubricating oil tank **(1)**	H						
Sludge tank level		local					
(1) See [9.1.7].							

12.8 Construction of lubricating oil piping systems

12.8.1 Materials

Materials used for oil piping system in machinery spaces are to comply with the provisions of [11.12.1].

12.8.2 Sight-flow glasses

The sight-flow glasses may be used in lubricating oil systems, provided that they are shown by testing to have a suitable degree of fire resistance and so designed that the oil does not impinge on the glass – see [9.3.4], item d).

12.8.3 Air and overflow pipes

Air and overflow pipes are to comply with [9.1] and [9.3], including [5.11], as applicable.

12.8.4 Sounding pipes and level gauges

a) Safe and efficient means of ascertaining the amount of oil contained in any lubricating oil tank are to be provided.

b) Sounding pipes of lubricating oil tanks are to comply with the provisions of [9.2].

c) Oil-level gauges complying with [2.10.2] may be used in place of sounding pipes.

d) Gauge cocks for ascertaining the level in the tanks are not to be used.

13 Thermal oil systems

13.1 Application

13.1.1 This Article applies to all thermal oil systems involving organic liquids heated below their initial boiling temperature at atmospheric pressure by means of:

- oil fired heaters
- exhaust gas heaters, or
- electric heaters.

13.2 Principle

13.2.1 General

Thermal oil systems are to be so designed as to:

- avoid overheating of the thermal oil and contact with air
- take into account the compatibility of the thermal oil with the heated products in case of contact due to leakage of coils or heater tubes
- prevent oil from coming into contact with sources of ignition.

13.2.2 Availability

Thermal oil systems are to be so designed that, in the event that any one essential auxiliary is inoperative, the thermal oil supply to essential services can be maintained. Partial reduction of the operating capability may be accepted, however, when it is demonstrated that the safe operation of the unit is not impaired.

13.3 General

13.3.1 Limitations on use of thermal oil

a) The oil is to be used in the temperature ranges specified by the producer. The delivery temperature is, however, to be kept 50°C below the oil distillation point.

b) Thermal oil is not to be used for the direct heating of:
   - accommodation
   - fresh drinking water
   - liquid cargoes with flashpoints below 60°C, except where permitted in Pt D, Ch 1, Sec 18, [6.4].

13.3.2 Location of thermal oil system components

Thermal oil heaters are normally to be located in spaces separated from main and auxiliary machinery spaces.

However, thermal oil heaters located in machinery spaces and protected by adequate screening may be accepted, subject to special consideration by the Society.

Note 1: For the purpose of application of Part C, Chapter 4, spaces where thermal oil heaters are located are to be considered as machinery spaces of category A.

13.3.3 Provision for quick drainage and alternative arrangements

a) Inlet and outlet valves of oil fired and exhaust fired heaters are to be arranged for remote closing from outside the compartment where they are situated.

   As an alternative, thermal oil systems are to be arranged for quick gravity drainage of the thermal oil contained in the system into a draining tank.

b) The expansion tank is to be arranged for quick gravity drainage into a draining tank.

   However, where the expansion tank is located in a low fire risk space, the quick drainage system may be replaced by a remote controlled closing device for isolating the expansion tank.

   The quick drainage system and the alternative closing device are to be capable of being controlled from inside and outside the space containing the expansion tank.

13.3.4 Ventilation

a) Spaces containing thermal oil heaters are to be suitably mechanically ventilated.

b) Ventilation is to be capable of being stopped from outside these spaces.

13.4 Design of thermal oil heaters and heat exchangers

13.4.1 Thermal oil heaters

Oil fired and exhaust-fired thermal oil heaters are to be designed, equipped and controlled in accordance with the requirements specified in Ch 1, Sec 3.

13.4.2 Heat exchangers

Heat exchangers are to be designed and equipped in accordance with the requirements specified in Ch 1, Sec 3.

13.5 Design of storage, expansion and draining tanks

13.5.1 Storage and draining tanks

a) The capacity of the storage tank is to be sufficient to compensate the losses expected in service.

b) The capacity of the draining tank is to be sufficient to collect the quantity of thermal oil contained in the system, including the expansion tank.

c) Storage and draining tanks may be combined.

13.5.2 Expansion tanks

a) The capacity of the expansion tank is to be sufficient to allow volume variations, due to temperature changes, of all the circulating oil.

b) The expansion tank is to be so designed, installed and connected to the circuit as to ensure that the temperature inside the tank remains below 50°C.

13.5.3 Drain pipes

Where provided, drains pipes of thermal oil tanks are to be fitted with self-closing valves or cocks.

13.5.4 Air pipes

a) Air pipes fitted to the expansion and drainage tanks are to be suitably sized to allow the quick gravity drainage referred to in [13.3.3].

b) The applicable requirements of [9.1] are to be complied with.

13.5.5 Overflow pipes

a) The expansion tank is to be fitted with an overflow pipe led to the drainage tank. This overflow pipe may be combined with the quick draining line provided for in [13.3.3], item b).

b) The applicable requirements of [9.3] are to be complied with.

13.5.6 Sounding pipes and level gauges

a) Sounding pipes are to comply with the provisions of [9.2].

b) Level gauges are to comply with the provisions of [2.10.2].

13.6 Design of circulation and heat exchange systems

13.6.1 Circulating pumps

At least two circulating pumps are to be provided, of such a capacity as to maintain a sufficient flow in the heaters with any one pump out of action.

However, for circulating systems supplying non-essential services, one circulating pump only may be accepted.

13.6.2 Filters

A device which efficiently filters the thermal oil is to be provided in the circuit.

In the case of essential services, the filters provided for this purpose are to be so arranged that they can be easily cleaned without stopping the thermal oil supply.

The fineness of the filter mesh is to comply with the requirements of the thermal oil heating installation manufacturer.

13.7 Control and monitoring

13.7.1 Monitoring

In addition to the requirements specified in Ch 1, Sec 3, [3.3.2] for thermal heaters and heat exchangers, alarms and safeguards for thermal oil systems are to be provided in accordance with Ch 1, Sec 3, Tab 22.

Note 1: Some departures from Ch 1, Sec 3, Tab 22 may be accepted by the Society in the case units operating in restricted zones.

13.7.2 Remote control

a) Remote control is to be arranged for:
   - shut-off of circulating pumps
   - quick drainage of the thermal oil system and expansion tank, or shut-off of the alternative devices (see [13.3.3])
   - shut-off of the fuel supply to the oil fired heaters or of the exhaust gas supply to the exhaust gas heaters (see Ch 1, Sec 3, [5.3]).

   The shut-off of the exhaust gas supply may be ensured either by the engine shut down or by an exhaust gas by-pass.

b) Such control is to be possible from the space containing the thermal oil heaters and from another position located outside such space.

13.8 Construction of thermal oil piping systems

13.8.1 Materials

a) Materials are to comply with the provisions of [11.12.1].

b) Casings of pumps, valves and fittings are to be made of steel or other ductile material.

13.8.2 Pipe connections

a) Pipe connections are to comply with Article [2.5] and to be suitable for the design temperature of the thermal oil system.

b) Screw couplings of a type approved by the Society may be accepted for pipes of an outside diameter not exceeding 15 mm provided they are fitted with cutting rings or equivalent arrangements.

c) The materials of the joints are to be impervious to thermal oil.

13.9 Thermal oil piping arrangements

13.9.1 Passage of thermal oil pipes through certain spaces

a) Thermal oil pipes are not to pass through accommodation or public spaces or control stations.

b) Thermal oil pipes passing through main and auxiliary machinery spaces are to be restricted as far as possible.

13.9.2 Discharge of relief valves

Relief valves are to discharge to the drain tank.

13.9.3 Provision for de-aerating

Provisions are to be made for automatic evacuation of air, steam and gases from the thermal oil system to a safe location.

14 Hydraulic systems

14.1 Application

14.1.1 Hydraulic installations intended for essential services

Unless otherwise specified, this Article applies to all hydraulic power installations intended for essential services.

14.1.2 Hydraulic installations located in spaces containing sources of ignition

Hydraulic power installations not serving essential services but located in spaces where sources of ignition are present are to comply with the provisions of [14.3.2], [14.3.3], [14.4.4] and [14.4.5].

14.1.3 Low pressure or low power hydraulic installations

Hydraulic power installations with a design pressure of less than 2,5 MPa and hydraulic power packs of less than 5 kW will be given special consideration by the Society.

14.1.4 Very high pressure hydraulic installations

Hydraulic power installations with a design pressure exceeding 35 MPa will be given special consideration by the Society.

14.2 General design

14.2.1 Design requirements

As far as practicable, hydraulic systems are to be so designed as to:

- avoid any overload of the system
- maintain the actuated equipment in the requested position (or the driven equipment at the requested speed)
- avoid overheating of the hydraulic oil
- prevent hydraulic oil from coming into contact with sources of ignition.

14.2.2 Availability

a) As a rule, hydraulic systems are to be so designed that, in the event that any one essential component becomes inoperative, the hydraulic power supply to essential services can be maintained. Partial reduction of the operating capability of the hydraulic system may be accepted, however, when it is demonstrated that the safe operation of the unit is not impaired.

b) When a hydraulic power system is simultaneously serving one essential system and other systems, it is to be ensured that:
   - operation of such other systems, or
   - a single failure in the installation external to the essential system,

   is not detrimental to the operation of the essential system.

c) Provision b) applies in particular to steering gear.

d) Hydraulic systems serving lifting or hoisting appliances, including platforms, ramps, hatch covers, lifts, etc., are to be so designed that a single failure of any component of the system may not result in a sudden undue displacement of the load or in any other situation detrimental to the safety of the unit and persons on board.

14.3 General

14.3.1 Definitions

a) A power unit is the assembly formed by the hydraulic pump and its driving motor.

b) An actuator is a component which directly converts hydraulic pressure into mechanical action.

14.3.2 Limitations of use of hydraulic oils

a) Oils used for hydraulic power installations are to have a flashpoint not lower than 150°C and be suitable for the entire service temperature range.

b) The hydraulic oil is to be replaced in accordance with the specification of the installation manufacturer.

14.3.3 Location of hydraulic power units

a) Whenever practicable, hydraulic power units are to be located outside main engine or boiler rooms.

b) Where this requirement is not complied with, shields or similar devices are to be provided around the units in order to avoid an accidental oil spray or jet on heated surfaces which may ignite oil.

14.4 Design of hydraulic pumps and accessories

14.4.1 Power units

a) Hydraulic power installations are to include at least two power units so designed that the services supplied by the hydraulic power installation can operate simultaneously with one power unit out of service. A reduction of the performance may be accepted.

b) Low power hydraulic installations not supplying essential services may be fitted with a single power unit, provided that alternative means, such as a hand pump, are available on board.

14.4.2 Pressure reduction units

Pressure reduction units used in hydraulic power installations are to be duplicated.

14.4.3 Filtering equipment

a) A device is to be fitted which efficiently filters the hydraulic oil in the circuit.

b) Where filters are fitted on the discharge side of hydraulic pumps, a relief valve leading back to the suction or to any other convenient place is to be provided on the discharge of the pumps.

14.4.4 Provision for cooling

Where necessary, appropriate cooling devices are to be provided.

14.4.5 Provision against overpressure

a) Safety valves of sufficient capacity are to be provided at the high pressure side of the installation.

b) Safety valves are to discharge to the low pressure side of the installation or to the service tank.

14.4.6 Provision for venting

Cocks are to be provided in suitable positions to vent the air from the circuit.

14.4.7 Provision for drainage

Provisions are to be made to allow the drainage of the hydraulic oil contained in the installation to a suitable collecting tank.

14.5 Design of hydraulic tanks and other components

14.5.1 Hydraulic oil service tanks

a) Service tanks intended for hydraulic power installations supplying essential services are to be provided with at least:
   - a level gauge complying with [2.10.2]
   - a temperature indicator
   - a level switch complying with [14.6.2].

b) The free volume in the service tank is to be at least 10% of the tank capacity.

14.5.2 Hydraulic oil storage tanks

a) Hydraulic power installations supplying essential services are to include a storage tank of sufficient capacity to refill the whole installation should the need arise case of necessity.

b) For hydraulic power installations of less than 5 kW, the storage means may consist of sealed drums or tins stored in satisfactory conditions.

14.5.3 Hydraulic accumulators

The hydraulic side of the accumulators which can be isolated is to be provided with a relief valve or another device offering equivalent protection in case of overpressure.

14.6 Control and monitoring

14.6.1 Indicators

Arrangements are to be made for connecting a pressure gauge where necessary in the piping system.

14.6.2 Monitoring

Alarms and safeguards for hydraulic power installations intended for essential services, except steering gear, for which the provisions of Ch 1, Sec 11 apply, are to be provided in accordance with Tab 31.

Note 1: Some departures from Tab 31 may be accepted by the Society in the case of small units, units operating in restricted zones or platforms installed in sheltered coastal areas.

Note 2: Tab 31 does not apply to steering gear.

Table 31 : Hydraulic oil systems

Symbol convention H = High, HH = High high, G = group alarm L = Low, LL = Low low, I = individual alarm X = function is required, R = remote	Monitoring		Automatic control				
			System			Auxiliary	
Identification of system parameter	Alarm	Indication	Slow-down	Shut-down	Control	Stand by Start	Stop
Pump pressure	L						
Service tank level	L**(1)(2)**						X**(2)**

(1) The low level alarm is to be activated before the quantity of lost oil reaches 100 litres or 70% of the normal volume in the tank, whichever is the less.

(2) For hydraulics cranes where no electrical system has been provided, the requirement may be waived if the level gauge, the pressure gauge and the temperature gauge indicators are always visible by the crane operator. In addition, a warning label shall be placed on the tank reminding that, prior to start any operation of the crane, the oil level is to be checked.

15 Steam systems

15.1 Application

15.1.1 Scope

This Article applies to all steam systems intended for essential and non-essential services.

Steam systems with a design pressure of 10 MPa or more will be given special consideration.

15.2 Principle

15.2.1 Availability

a) Where a single boiler is installed, the steam system may supply only non-essential services.

b) Where more than one boiler is installed, the steam piping system is to be so designed that, in the event that any one boiler is out of action, the steam supply to essential services can be maintained.

15.3 Design of steam lines

15.3.1 General

a) Every steam pipe and every connected fitting through which steam may pass is to be designed, constructed and installed such as to withstand the maximum working stresses to which it may be subjected.

b) When the design temperature of the steam piping system exceeds 400°C, calculations of thermal stresses are to be submitted to the Society as specified in [2.4].

c) Steam connections on boilers and safety valves are to comply with the applicable requirements of Ch 1, Sec 3.

15.3.2 Provision against overpressure

a) If a steam pipe or fitting may receive steam from any source at a higher pressure than that for which it is designed, a suitable reducing valve, relief valve and pressure gauge are to be fitted.

b) When, for auxiliary turbines, the inlet steam pressure exceeds the pressure for which the exhaust casing and associated piping up to the exhaust valves are designed, means to relieve the excess pressure are to be provided.

15.3.3 Provision for dumping

In order to avoid overpressure in steam lines due to excessive steam production, in particular in systems where the steam production cannot be adjusted, provisions are to be made to allow the excess steam to be discharged to the condenser by means of an appropriate dump valve.

15.3.4 Provision for draining

Means are to be provided for draining every steam pipe in which dangerous water hammer action might otherwise occur.

15.3.5 Steam heating pipes

a) When heating coils are fitted in compartments likely to contain either fuel oil or liquid or dry cargoes, arrangements such as blind flanges are to be provided in order to disconnect such coils in the event of carriage of dry or liquid cargoes which are not to be heated.

b) The number of joints on heating coils is to be reduced to the minimum consistent with dismantling requirements.

15.3.6 Steam lines in accommodation spaces

Steam lines are not to pass through accommodation spaces, unless they are intended for heating purposes.

15.3.7 Turbine connections

a) A sentinel valve or equivalent is to be provided at the exhaust end of all turbines. The valve discharge outlets are to be visible and suitably guarded if necessary.

b) Bled steam connections are to be fitted with non-return valves or other approved means to prevent steam and water returning to the turbines.

15.3.8 Strainers

a) Efficient steam strainers are to be provided close to the inlets to ahead and astern high pressure turbines or, alternatively, at the inlets to manoeuvring valves.

b) Where required by the manufacturer of the auxiliaries, steam strainers are also to be fitted in the steam lines supplying these auxiliaries.

16 Boiler feed water and condensate systems

16.1 Application

16.1.1 This Article applies to:

- feed water systems of oil fired and exhaust gas boilers
- steam drain and condensate systems.

16.2 Principle

16.2.1 General

Boiler feed water and condensate systems are to be so designed that:

- reserve feed water is available in sufficient quantity to compensate for losses
- feed water is free from contamination by oils or chlorides
- feed water for propulsion systems is suitably de-aerated.

16.2.2 Availability

a) Feed water systems are to be so designed that, in the event of failure of any one component, the steam supply to essential services can be maintained or restored.

b) Condensate systems are to be so designed that, in the event of failure of:
   - one condensate pump, or
   - the arrangements to maintain vacuum in the condenser,

   the steam supply to essential services can be maintained. Partial reduction of the propulsion capability may be accepted.

16.3 Design of boiler feed water systems

16.3.1 Number of feed water systems

a) Every steam generating system which supplies essential services is to be provided with not less than two separate feed water systems from and including the feed pumps, noting that a single penetration of the steam drum is acceptable.

b) The requirement stated in item a) may be dispensed with for boilers heated exclusively by engine exhaust gases or by steam for which one feed system is considered as sufficient, provided an alternative supply of steam is available on board.

c) Each boiler is to be provided with feed regulators as specified in Ch 1, Sec 3, [5].

16.3.2 Feed pumps

a) The following pumps are to be provided:
   - at least one main feed pump of sufficient capacity to supply the boilers under nominal conditions, and
   - one standby feed pump.

b) The capacity of the standby pump may be less than that of the main feed pumps provided it is demonstrated that, taking into account the reduction of the steam plant capacity, the unit remains safely operable.

c) Main feed pumps may be either independent or driven by the main turbines. The standby feed pump is to be independent.

d) Independent feed pumps for main boilers are to be fitted with a delivery control and regulating system.

e) Unless overpressure is prevented by the feed pump characteristics, means are to be provided which will prevent overpressure in the feed water system.

f) The pressure head of feed pumps is to take into account the maximum service pressure in the boiler as well as the pressure losses in the discharge piping. The suction head of feed pumps is to be such as to prevent cavitation as far as possible.

g) Feed pumps and pipes are to be provided with valves so arranged that any one pump can be overhauled while the boilers are operating at full load.

16.3.3 Feed water tanks

a) All units fitted with boilers supplying essential services are to be provided with reserve feed water tanks.

b) Boilers are to be provided with means to supervise and control the quality of the feed water. Suitable arrangements are to be provided to preclude, as far as practicable, the entry of oil or other contaminants which may adversely affect the boiler.

c) Feed water tanks are not to be located adjacent to fuel oil tanks. Fuel oil pipes are not to pass through feed water tanks.

d) For boilers supplying essential services, one or more evaporators are to be provided, the capacity of which is to compensate for the losses of feed water due to the operation of the machines, in particular where the fuel supplied to the boilers is atomised by means of steam.

16.3.4 Provision for de-aerating feed water

A de-aerator is to be provided to ensure the de-aeration of the feed water intended for main boilers before it enters such boilers.

16.4 Design of condensate systems

16.4.1 Condensers

a) Appropriate arrangements, such as air ejectors, are to be provided to maintain vacuum in the main condenser or restore it to the required value.

b) Cooling of the main condenser is to comply with the provisions of [10.3.4].

16.4.2 Condensate pumps

a) Condensate pumps are to include at least:
- one main condensate pump of sufficient capacity to transfer the maximum amount of condensate produced under nominal conditions, and
- one independently driven standby condensate pump.

b) The standby condensate pump may be used for other purposes.

16.4.3 Condensate observation tanks

Any condensate from the steam heating pipes provided for fuel oil tanks and bunkers, fuel oil or lubricating oil heaters, production and processing facilities is to be led to an observation tank or some other device of similar efficiency located in a well-lighted and readily accessible position.

16.5 Control and monitoring

16.5.1 General

The provisions of this sub-article apply only to feed water and condensate systems intended for propulsion.

16.5.2 Monitoring

Alarms and safeguards are to be provided for feed water and condensate systems in accordance with Tab 32.

Note 1: Some departures from Tab 32 may be accepted by the Society in the case of units operating in restricted zones.

Table 32 : Boiler feed and condensate system

Symbol convention H = High, HH = High high, G = group alarm L = Low, LL = Low low, I = individual alarm X = function is required, R = remote	Monitoring		Automatic control				
			System			Auxiliary	
Identification of system parameter	Alarm	Indication	Slow-down	Shut-down	Control	Stand by Start	Stop
Sea water flow or equivalent	L						
Condenser pressure	H	local					
	HH			X			
Water level in condenser (unless justified)	H	local					
Feed water salinity	H	local					
Feed water pump delivery pressure	L	local					
						X	
Feed water tank level	L						

16.5.3 Automatic controls

Automatic level control is to be provided for:

- de-aerators,
- condensers.

16.6 Arrangement of feed water and condensate piping

16.6.1 Feed water pipes are not to pass through fuel oil or lubricating oil tanks.

Pipes connected to feed water tanks are to be so arranged as to prevent the contamination of feed water by fuel oil, lubricating oil or chlorides.

Arrangements are to be made to avoid any flammable or toxic vapours from being released in the boiler feed water system through contaminated condensates.

17 Compressed air systems

17.1 Application

17.1.1 This Article applies to compressed air systems intended for essential services, and in particular to:

- starting of engines
- control and monitoring.

17.2 Principle

17.2.1 General

a) As a rule, compressed air systems are to be so designed that the compressed air delivered to the consumers:
   - is free from oil and water, as necessary
   - does not have an excessive temperature.

b) Compressed air systems are to be so designed as to prevent overpressure in any part of the systems.

17.2.2 Availability

a) Compressed air systems are to be so designed that, in the event of failure of one air compressor or one air receiver intended for starting, control purposes or other essential services, the air supply to such services can be maintained. The filling connections of the compressed air receivers shall be fitted with a non-return valve.

b) The compressed air system for starting engines intended for essential services is to be arranged so that the necessary initial charge of starting air can be developed on board the unit without external aid. If, for this purpose, an emergency air compressor or an electric generator is required, these units are to be powered by a hand-starting oil engine or a hand-operated compressor.

c) Where the compressed air is necessary for the air whistle or other safety services, it is to be available from two compressed air receivers. A separate connection, dedicated for this purpose, is to be provided directly from the compressed air main.

17.3 Design of starting air systems

17.3.1 Air supply for starting engines intended for essential services

a) The capacity of starting air systems is to allow at least 3 consecutive starts for each engine intended for essential services.

b) The capacity of starting air systems serving propulsion plants is to comply with the requirements given in Pt C, Ch 1, Sec 10, [17] of the Ship Rules.

17.3.2 Number and capacity of air compressors

a) Where engines intended for essential services are arranged for starting by compressed air, two or more air compressors are to be fitted with a total capacity sufficient to supply within one hour the quantity of air needed to satisfy the provisions of [17.3.1] charging the receivers from atmospheric pressure. This capacity is to be approximately equally divided between the number of compressors fitted, excluding the emergency compressor fitted in pursuance of item c) below.

b) At least one of the compressors is to be independent of the engines for which starting air is supplied and is to have a capacity of not less than 50% of the total required in item a).

c) Where, for the purpose of [17.2.2], an emergency air compressor is fitted, this unit is to be power driven by internal combustion engine, electric motor or steam engine.

   Suitable hand starting arrangement or independent electrical starting batteries may be accepted. In the case of small installations, a hand-operated compressor of approved capacity may be accepted.

17.3.3 Number and capacity of air receivers

a) Where engines intended for essential services are arranged for starting by compressed air, at least two air receivers are to be fitted of approximately equal capacity and capable of being used independently.

b) The total capacity of air receivers is to be sufficient to provide without replenishment the number of starts required in [17.3.1]. When other users such as control systems, whistle, etc. are connected to the starting air receivers, their air consumption is also to be taken into account.

Compressed air receivers are to comply with the requirements of Ch 1, Sec 3.

17.3.4 Air supply for starting the emergency generating set

Where the emergency generating set is arranged for starting by compressed air, the following provisions are to be complied with:

a) The starting air arrangement is to include a compressed air vessel, storing the energy dedicated only for starting of the emergency generator. The capacity of the compressed air available for starting purpose is to be sufficient to provide, without replenishment, at least three consecutive starts.

b) The compressed air starting systems may be maintained by the compressed air receivers supplying the engines intended for essential services, through a non-return valve fitted in the emergency generator space, or by an emergency air compressor which, if electrically driven, is to be supplied from the emergency switchboard.

c) All of these starting, charging and energy storing devices are to be located in the emergency generator space and are not to be used for any purpose other than the operation of the emergency generating set.

17.4 Design of control and monitoring air systems

17.4.1 Air supply

a) The control and monitoring air supply to essential services is to be available from two sources of a sufficient capacity to allow normal operation with one source out of service.

b) At least one air vessel fitted with a non-return valve is to be provided for control and monitoring purposes.

c) Pressure reduction units used in control and monitoring air systems intended for essential services are to be duplicated, unless an alternative air supply is provided.

d) Failure of the control air supply is not to cause any sudden change of the controlled equipment which may be detrimental to the safety of the unit.

17.4.2 Pressure control

Arrangements are to be made to maintain the air pressure at a suitable value in order to ensure satisfactory operation of the installation.

17.4.3 Air treatment

In addition to the provisions of [17.8.3], arrangements are to be made to ensure cooling, filtering and drying of the air prior to its introduction in the monitoring and control circuits.

17.5 Design of air compressors

17.5.1 Prevention of excessive temperature of discharged air

Air compressors are to be so designed that the temperature of discharged air cannot exceed 95°C. For this purpose, the air compressors are to provided where necessary with:

- suitable cooling means
- fusible plugs or alarm devices set at a temperature not exceeding 120°C.

17.5.2 Prevention of overpressure

a) Air compressors are to be fitted with a relief valve complying with [2.6.3].

b) Means are to be provided to prevent overpressure wherever water jackets or casings of air compressors may be subjected to dangerous overpressure due to leakage from air pressure parts.

c) Water space casings of intermediate coolers of air compressors are to be protected against any overpressure which might occur in the event of rupture of air cooler tubes.

17.5.3 Crankcase relief valves

Air compressors having a crankcase volume of at least 0,6 m^3 are to be fitted with crankcases explosion relief valves satisfying the provisions of Ch 1, Sec 2, [2.3.4].

17.5.4 Provision for draining

Air compressors are to be fitted with a drain valve.

17.6 Control and monitoring of compressed air systems

17.6.1 Monitoring

Alarms and safeguards are to be provided for compressed air systems in accordance with Tab 33.

Note 1: Some departures from Tab 33 may be accepted by the Society in the case of units operating in restricted zones.

Table 33 : Compressed air systems

Symbol convention H = High, HH = High high, G = group alarm L = Low, LL = Low low, I = individual alarm X = function is required, R = remote	Monitoring		Automatic control				
			System			Auxiliary	
Identification of system parameter	Alarm	Indication	Slow-down	Shut-down	Control	Stand by Start	Stop
Compressor lubricating oil pressure (except where splash lubrication)	L						
Air pressure after reducing valves	L + H	local					
Starting air pressure before main shut-off valve	L	local + R(**1**)					
Air vessel pressure	L						
(1) Remote indication is required if starting of air compressor are remote controlled, from wheelhouse for example							

17.6.2 Automatic controls

Automatic pressure control is to be provided for maintaining the air pressure in the air receivers within the required limits.

17.7 Materials

17.7.1 Pipes and valve bodies in control and monitoring air systems and in other air systems intended for non-essential services may be made of plastic in accordance with the provisions of Ch 1, App 1.

17.8 Arrangement of compressed air piping systems

17.8.1 Prevention of overpressure

Suitable pressure relief arrangements are to be provided for all systems.

17.8.2 Air supply to compressors

a) Provisions are to be made to reduce to a minimum the entry of oil into air pressure systems.

b) Air compressors are to be located in spaces provided with sufficient ventilation.

17.8.3 Air treatment and draining

a) Provisions are be made to drain air pressure systems.

b) Efficient oil and water separators, or filters, are to be provided on the discharge of compressors, and drains are to be installed on compressed air pipes wherever deemed necessary.

17.8.4 Lines between compressors, receivers and engines

All discharge pipes from starting air compressors are to be lead directly to the starting air receivers, and all starting pipes from the air receivers to engines are to be entirely separate from the compressor discharge pipe system.

17.8.5 Protective devices for starting air mains

Non-return valves and other safety devices are to be provided on the starting air mains of each engine in accordance with the provisions of Ch 1, Sec 2, [3.1.1].

18 Exhaust gas systems

18.1 General

18.1.1 Application

This Article applies to:

- exhaust gas pipes from engines and gas turbines
- smoke ducts from boilers and incinerators.

18.1.2 Principle

Exhaust gas systems are to be so designed as to:

- limit the risk of fire
- prevent gases from entering manned spaces
- prevent water from entering engines.

18.2 Design of exhaust systems

18.2.1 General

Exhaust systems are to be so arranged as to minimise the intake of exhaust gases into manned spaces, air conditioning systems and engine intakes.

18.2.2 Limitation of exhaust line surface temperature

a) Exhaust gas pipes and silencers are to be either water cooled or efficiently insulated where:
   - their surface temperature may exceed 220°C, or
   - they pass through spaces of the unit where a temperature rise may be dangerous.

b) The insulation of exhaust systems is to comply with the provisions of Ch 1, Sec 1, [3.4.1].

18.2.3 Limitation of pressure losses

Exhaust gas systems are to be so designed that pressure losses in the exhaust lines do not exceed the maximum values permitted by the engine or boiler manufacturers.

18.2.4 Intercommunication of engine exhaust gas lines or boiler smoke ducts

a) Exhaust gas from different engines is not to be led to a common exhaust main, exhaust gas boiler or economiser, unless each exhaust pipe is provided with a suitable isolating device complying with [18.2.6].

b) Smoke ducts from boilers discharging to a common funnel are to be separated to a height sufficient to prevent smoke passing from a boiler which is operating to a boiler out of action.

18.2.5 Boilers designed for alternative oil firing and exhaust gas operation

Where boilers are designed for alternative oil firing and exhaust gas operation, the exhaust gas pipe from the engine is to be fitted with an isolating device complying with [18.2.6].

18.2.6 Isolating devices

Where isolating devices are fitted on engine exhaust ducts or boiler smoke ducts, safety devices are to be provided to prevent the starting of the engine or boiler fuel burning installation if the isolating device is not in the open position. An indicator is also to be provided on the manoeuvring gear of the isolating device to show whether it is open or closed.

18.2.7 Exhaust gas pipe terminations

a) Exhaust outlets of internal combustion engines are to be fitted with efficient spark arresting devices and are to discharge outside the hazardous areas. Exhaust outlets of fired boilers are to discharge outside hazardous areas.

b) Where exhaust pipes are led overboard close to the load waterline, means are to be provided to prevent water from entering the engine or the unit.

c) Where exhaust pipes are water cooled, they are to be so arranged as to be self-draining overboard.

18.2.8 Control and monitoring

A high temperature alarm is to be provided in the exhaust gas manifolds of thermal oil heaters to detect any outbreak of fire.

18.3 Materials

18.3.1 General

Materials of exhaust gas pipes and fittings are to be resistant to exhaust gases and suitable for the maximum temperature expected.

18.3.2 Use of plastics

The use of non-metallic materials may be accepted in water cooled systems in accordance with the provisions of Ch 1, App 1.

18.4 Arrangement of exhaust piping systems

18.4.1 Provision for thermal expansion

a) Exhaust pipes and smoke ducts are to be so designed that any expansion or contraction does not cause abnormal stresses in the piping system, and in particular in the connection with engine turboblowers.

b) The devices used for supporting the pipes are to allow their expansion or contraction.

18.4.2 Provision for draining

a) Drains are to be provided where necessary in exhaust systems, and in particular in exhaust ducting below exhaust gas boilers, in order to prevent water flowing into the engine.

b) Where exhaust pipes are water cooled, they are to be so arranged as to be self-draining overboard.

18.4.3 Passage through spaces

Exhaust gas pipes and silencers which pass through spaces of the unit where a temperature rise might be dangerous are to be efficiently cooled or lagged.

18.4.4 Flexible hoses

The use of flexible hoses in water cooled exhaust systems will be given special consideration by the Society.

18.4.5 Silencers

Engine silencers are to be so arranged as to provide easy access for cleaning and overhaul.

18.4.6 Exhaust pipe termination

Exhaust pipes are to terminate in a place where the safety of helicopter operations is not impaired.

18.5 Additional requirements for exhaust gas treatment systems

18.5.1 General

Exhaust gas treatment systems are to be designed, arranged

and installed in accordance with the following requirements.

18.5.2 Design

Attention is drawn on IMO Guidelines regarding environmental performance of equipment such as Exhaust gas cleaning systems (ECGS) and Selective catalytic reduction (SCR) systems.

18.5.3 Availability

Availability of the machinery served by the exhaust gas treatment system is to be substantiated by a risk analysis.

The exhaust gas treatment equipment is to be so arranged that, in the case of failure of such equipment, propulsion power and auxiliary power supplying essential functions are not affected. Where necessary, a bypass is to be installed.

In case of black out, automatic starting of engines, if provided, is to remain effective as if no exhaust gas treatment system were installed and not detrimental to the exhaust gas treatment installation.

18.5.4 Arrangement

a) Exhaust systems connections

As mentioned in [18.2.4], no interconnection is permitted between different exhaust piping systems for engines. In case of one exhaust gas treatment system used for several installations, interconnections may be acceptable with additional devices installed as follows:

1) Forced ventilation is installed at the outlet of common exhaust pipe, preventing any back flow of exhaust gases in individual exhaust ducts in any possible working conditions.

2) Individual isolating devices for exhaust pipes are to be provided on each individual exhaust pipes.

b) By-pass

When exhaust gas treatment system may be by-passed, proper means are to be installed providing double barrier upstream from the exhaust gas treatment system, in order to enable safe inspection in exhaust gas treatment equipment in any working configuration of combustion units.

c) Use of substances mentioned in IMDG Code

In case substances mentioned in IMDG Code are used in exhaust gas treatment systems, drainage and/or bilge pumping of compartments where such systems are located is to be separated from ship bilge system. Retention of potential leakages using coaming devices associated to spill kits is to be implemented. Drainage directly to the sea is to be avoided as far as possible.

Treatment products tanks are not to be contiguous with tanks containing sea water, fresh water, fuel, lubricating tanks. A ventilated cofferdam between treatment product tanks and above mentioned tanks is an acceptable solution. Necessity of ventilation is to be considered on case by case basis, with relevant risk analysis.

Treatment products tanks are not to be located in category A machinery spaces unless a specific risk analysis is submitted to the Society for approval.

Treatment products tanks when located adjacent to or within a compartment used for other purposes are to be surrounded by coamings delimiting space fitted with a high level alarm. Bilge system of this compartment may be connected to ship bilge system. In this case, arrangements are to be made to isolate remotely this bilge suction and an alternative fixed pumping system, remotely controlled, is to be installed in order to pump liquid contained in compartment bilge and inside area delimited by coamings to chemical substance to bunkering station.

For compartment containing treatment products tanks a risk analysis is to be provided, taking into account normal or abnormal operating conditions (failure, fluid leakage, fire) regarding human health and damage to essential equipment contained in compartment.

Toxic or flammable product pipes, which, if damaged, would allow the product to escape from a tank, are to be fitted with a quick closing valve directly on the tank, capable of being closed from a safe position outside the compartment involved.

Overflow pipes of product tanks are to be led to a specific tank dedicated for one kind of product. If several treatment tanks exist for a same product, overflow tank may be common.

Sounding pipes and air pipes are to end in an open space above freeboard deck. Means in order to prevent water entry through these pipe ends in any circumstances are to be provided.

Filling systems for treatment products are to be located in places where no interference with other ship activities would happen. In case interference is unavoidable, risk analysis is to be provided in order to evaluate occurrence and level of danger for crew and passengers if any.

Filling systems are to fulfil same requirements as in [11.4.2]. Drainage of coamings if any and outlet of safety valves are to be led to a tank designed for that purpose.

In case substances covered by IEC standards 60092-502 or -506 are used, requirements regarding electric installations, dangerous areas and ventilation mentioned in these standards are to be applied and a specific risk analysis is to submitted.

Piping systems involved in process are not to pass through accommodations, control stations and service spaces.

Ventilation of compartments where treatment substances are stored or used somehow is to be separated from any ventilation systems. It has to be provided with mechanical means of ventilation. Acceptance of common ventilation with other compartments may be accepted on case by case basis subject to risk analysis.

d) Materials

Materials used for equipment and piping systems are to be suitable with fluids conveyed, not leading to early corrosion or creating hazardous gases, when in contact with treatment liquid or vapours. This requirement is also valid for coamings, save-alls, fans and ducts being part of exhaust gas treatment system.

Aluminium is to be avoided for equipment and piping systems in contact with fluids like caustic soda.

Copper is to be avoided for equipment and piping systems in contact with fluids containing ammonia.

e) Control and monitoring

Alarms and indications are to be provided in accordance with Tab 34.

Information related to exhaust gas treatment device and wash water discharge measurements is to be made available in a control station.

Table 34 : Control and monitoring for exhaust gas treatment systems

Symbol convention H = High, HH = High high, G = group alarm L = Low, LL = Low low, I = individual alarm X = function is required, R = remote	Monitoring		Automatic control				
			System			Auxiliary	
Identification of system parameter	Alarm	Indication	Slow-down	Shut-down	Control	Stand by Start	Stop
Failure of exhaust fans (each fan)	X						
Exhaust temperature before entering in plastic parts, or Cooling medium flow	H L	local local					
Product tank level	H **(1)**	local**(1)**					
(1) High level alarm is to be independent from the tank level indicator.							

19 Oxyacetylene welding systems

19.1 Application

19.1.1 This Article applies to centralised fixed plants for oxyacetylene welding installed on units. It may also be applied, at the discretion of the Society, to other plants using liquefied gas, such as propane.

19.2 Definitions

19.2.1 Centralised plants for oxyacetylene welding

A centralised plant for oxyacetylene welding is a fixed plant consisting of a gas bottle room, distribution stations and distribution piping, where the total number of acetylene and oxygen bottles exceeds 4.

19.2.2 Gas bottle rooms

A gas bottle room is a room containing acetylene and oxygen bottles, where distribution headers, non-return and stop valves, pressure reducing devices and outlets of supply lines to distribution stations are also installed.

19.2.3 Distribution stations

Distribution stations are adequately protected areas or cabinets equipped with stop valves, pressure regulating devices, pressure gauges, non-return valves and oxygen as well as acetylene hose connections for the welding torch.

19.3 Design of oxyacetylene welding systems

19.3.1 General

No more than two distribution stations are normally permitted.

19.3.2 Acetylene and oxygen bottles

a) The bottles are to be tested under attendance of the Society or by a body recognised by the Society.

b) Bottles with a capacity exceeding 50 litres are not permitted.

c) Bottles supplying the plant and spare bottles are to be installed in the gas bottle room. Installation within accommodation spaces, service spaces, control stations and machinery spaces is not permitted.

d) Bottles are to be installed in a vertical position and are to be safely secured. The securing system is to be such as to allow the ready and easy removal of the bottles.

19.3.3 Piping systems

a) In general, the acetylene and oxygen piping systems are to comply with the following provisions:
- all valves and fittings as well as welding torches and associated supply hoses are to be adapted to this specific service and suitable for the conditions expected in the different parts of the system
- acetylene piping is to be of stainless steel and seamless drawn
- oxygen piping is to be of copper or stainless steel and seamless drawn
- the connections between the various pipe sections are to be carried out by means of butt welding. Other types of connections including threaded connections and flange connections are not permitted
- only a minimum number of unavoidable connections are permitted provided they are located in a clearly visible position.

b) High pressure lines (i.e. lines between bottles and pressure reducing devices) are to be installed inside the gas bottle room and are to comply with the following provisions:
- acetylene and oxygen piping and associated fittings are to be suitable for a design pressure of 29,5 MPa
- a non-return valve is to be installed on the connection of each acetylene and oxygen bottle to the header
- stop valves are to be provided on the bottles and kept shut when distribution stations are not working.

c) Low pressure lines (i.e. lines between pressure reducing devices and distribution stations) are to comply with the following provisions:
- for low pressure lines, black steel pipes seamless drawn could be also acceptable provided that:
  - a thickness is not less than 2,5 mm when installed in the open air
  - a thickness is not less than 2,0 mm when installed indoor
- supply lines to each distribution station are to include, at the station inlet:
  - a stop valve to be kept shut when the station is not working
  - devices to protect the supply lines from back flow of gas or flame passage.

d) Safety valves are to be provided on the low pressure side of the pressure reducing devices and led to the open air at least 3 m above the deck in a safe location where no source of ignition is present.

19.4 Arrangement of oxyacetylene welding systems

19.4.1 Gas bottle rooms

a) The gas bottle room is to be located in an independent space over the highest continuous deck and provided with direct access from outside. The limiting bulkheads and decks are to be gas-tight and made of steel.

b) When the total number of gas bottles, including possible spare bottles which are not connected to the plant, does not exceed 8, acetylene and oxygen bottles may be installed in the same room. Otherwise, acetylene and oxygen bottles are to be separated by a gas-tight bulkhead.

c) The bottle room is to be adequately insulated and ventilated so that the temperature inside does not exceed 40°C. If the temperature cannot be controlled by means of natural ventilation, mechanical and independent ventilation is to be provided. Air outlets are to be led at least 3 m away from ignition sources and ventilation intakes and are to be equipped with flameproof wire gauze.

d) The gas bottle room is not to be used for other services on board. Flammable oil or gas piping, except that related to the oxyacetylene welding plant, is not to be led through this room.

Note 1: On small units, gas bottles may be installed on open deck in a safe position to the satisfaction of the Society. In such case, appropriate protection is to be provided:
- for gas bottles, against sunrays and atmospheric agents, by means of watertight covers
- for the associated valves, piping and fittings, by means of steel covers, metal grids or similar devices.

Such means of protection are to be easily removable to allow bottle removal, when necessary.

When the total number of bottles exceeds 8, acetylene bottles are to be separated from oxygen bottles.

19.4.2 Distribution stations

Distribution stations are to be located in the engine room or in the workshop, in a well-ventilated position and protected against possible mechanical damage.

Note 1: On small units, distribution stations may also be installed in the open air, enclosed in a cabinet with a locked door, or in controlled access areas, to the satisfaction of the Society.

19.4.3 Piping

a) Piping is not to be led through accommodation or service spaces.

b) Piping is to be protected against any possible mechanical damage.

c) In way of deck or bulkhead penetrations, piping is to be suitably enclosed in sleeves so arranged as to prevent any fretting of the pipe with the sleeve.

19.4.4 Signboards

Signboards are to be posted on board the unit in accordance with Tab 35.

Table 35 : Signboards

Location of the signboard	Signboard to be posted
in the gas bottle room	diagram of the oxyacetylene plant
	"no smoking"
in way of: • bottle stop valves • distribution station stop valves	"to be kept shut when distribution stations are not working"
in way of the pressure reducing devices	indication of the maximum allowable pressure at the pressure reducing device outlet
in way of the safety valve discharge outlet	"no smoking"

20 Certification, inspection and testing of piping systems

20.1 Application

20.1.1 This Article defines the certification and workshop inspection and testing programme to be performed on:

- the various components of piping systems
- the materials used for their manufacture.

On board testing is dealt with in Ch 1, Sec 11.

20.2 Type tests of flexible hoses and expansion joints

20.2.1 General

a) Prototype test programmes are to be submitted by the manufacturer and are to be sufficiently detailed to demonstrate performance in accordance with the specified standards.

b) Prototype test programmes are to be made in accordance with recognised standards which are suitable for the intended service of the flexible hose or of an expansion joint.

c) Tests are to take into consideration the maximum anticipated in-service pressures, vibration frequencies and forces due to the installation.

d) All flexible hose assemblies or expansion joints are to be satisfactorily prototype burst tested to an international standard (see Note 1) to demonstrate that they are able to withstand a pressure not less than 4 times their design pressure without indication of failure or leakage.

Note 1: The international standards (e.g. EN or SAE standards) for burst testing of non-metallic hoses require the pressure to be increased until burst without any holding period. Burst is to occur at a pressure greater than 4 times the maximum working pressure.

20.2.2 Flexible hoses

a) For flexible hoses which are to comply with [2.7], prototype tests are to be carried out for each size of hose assembly.

However, for ranges with more than 3 different diameters, the prototype tests are to be carried out for at least:

- the smallest diameter
- the largest diameter
- intermediate diameters selected based on the principle that prototype tests carried out for a hose assembly with a diameter D are considered valid only for the diameters ranging between 0,5 D and 2 D.

For fire resistance tests the specimens are to be selected in accordance with ISO 15540:2016.

b) The flexible hoses subjected to the tests are to be fitted with their connections.

c) Type approval tests are to be carried out in accordance with the prototype test programmes required in [2.7.4], including, but not limited to, the scope of testing specified in Tab 36 for metallic flexible hoses and in Tab 40 for non-metallic flexible hoses.

Table 36 : Type tests and procedures for metallic flexible hoses depending on the application

	Burst	Pliability (bending)	Cycle test: U bend (Hoses up to 100 DN)	Cycle test: Cantilever bend (Hoses above DN 100)	Pressure and elongation	Impulse	Vibration
	ISO 10380:2012 **(1)**					**(2)**	Ch 3, Sec 6, Tab 1 **(1)**
Fuel Oil	X	X	X	X	X	**(3)**	**(4)**
Lubricating Oil	X	X	X	X	X	**(3)**	**(4)**
Hydraulic Oil	X	X	X	X	X	**(3)**	**(4)**
Thermal Oil	X	X	X	X	X	**(3)**	**(4)**
Fresh water	X	X	X	X	X	**(3)**	**(4)**
Sea water	X	X	X	X	X	**(3)**	**(4)**
Compressed air	X	X	X	X	X	**(3)**	**(4)**
Bilge	X	X	X	X	X	**(3)**	**(4)**
Exhaust Gas	X	X	X	X	X	**(3)**	**(4)**

(1) Other recognized standards may be accepted where agreed by the Society.
(2) Impulse pressure is to be raised from 0 to 1,5 times the design pressure with a frequency equal to 30-100 cycles per minute for at least 150 000 cycles.
(3) For piping systems subject to pressure pulsation.
(4) Where fitted to engines, pumps, compressors or other sources of high vibrations.

Table 37 : Type tests and procedures for non-metallic flexible hoses depending on the application

	Burst	Fire resistance	Visual inspection and dimensional check	Change in length	Resistance against liquid	Cover adhesion	Ozone resistance **(2)**	Impulse	Vibration	Vacuum	Cold flexibility
	EN ISO 1402:2021 **(1)**	EN ISO 15540:2016 / EN ISO 15541:2016 **(1)**	EN ISO 4671:2022 **(1)**	EN ISO 1402:2021 **(1)**	ISO 1817:2022 **(1)**	EN ISO 8033:2016 **(1)**	ISO 7326:2016 **(1)**	EN ISO 6802:2018 / EN ISO 6803:2017 **(1)**	Ch 3, Sec 6, Tab 1 **(1)**	EN ISO 7233:2016 **(1)**	EN ISO 10619-2:2021 **(1)**
Fuel Oil	X	X	X	X	X	X	X	**(3)**	**(4)**	**(5)**	**(6)**
Lubricating Oil	X	X	X	X	X	X	X	**(3)**	**(4)**	**(5)**	**(6)**
Hydraulic Oil	X	X	X	X	X	X	X	**(3)**	**(4)**	**(5)**	**(6)**
Thermal Oil	X	X	X	X	X	X	X	**(3)**	**(4)**	**(5)**	**(6)**
Fresh water	X		X	X		X	X	**(3)**	**(4)**	**(5)**	**(6)**
Sea water	X	X	X	X		X	X	**(3)**	**(4)**	**(5)**	**(6)**
Compressed air	X		X	X		X	X	**(3)**	**(4)**	**(5)**	**(6)**
Bilge	X		X	X		X	X	**(3)**	**(4)**	**(5)**	**(6)**
Exhaust Gas	X		X	X		X	X	**(3)**	**(4)**	**(5)**	**(6)**

(1) Other recognized standards may be accepted where agreed by the Society.
(2) For rubber hoses only.
(3) For piping systems subject to pressure pulsation.
(4) Where fitted to engines, pumps, compressors or other sources of high vibrations.
(5) For suction hoses only.
(6) For piping systems subject to low temperature (< 0°C).

20.2.3 Expansion joints

a) For the expansion joints which are to comply with [2.7], relevant type approval tests are to be carried out on a representative sampling on each type and for each pressure range.

b) The expansion joints subjected to the tests are to be fitted with their connections.

c) Type approval tests are to be carried out in accordance with the prototype test programmes required in [2.7.4], including, but not limited to, the scope of testing specified in Tab 38 for metallic expansion joints and in Tab 39 for non-metallic expansion joints.

d) Exemptions from prototype burst test may be granted for expansion joints of large diameter used on sea water lines and to large diameter expansion joints used on exhaust gas lines, except for those which are fitted directly on engines. Testing may be limited to pressure test.

20.3 Type tests of air pipe closing appliances

20.3.1 Type approval tests are to be carried out on each type and size of air pipe closing device, in accordance with Tab 40.

Table 38 : Type tests and procedures to be performed for metallic expansion joints

	Burst	Hydrostatic	Cyclic expansion **(1)**	Vibration
	see [20.2.1], item d) **(2)**	see [20.5.6] **(2)**	EJMA Code **(3)(2)**	Ch 3, Sec 6, Tab 1 **(2)**
Fuel Oil	X		X	**(4)**
Lubricating Oil	X		X	**(4)**
Hydraulic Oil	X		X	**(4)**
Thermal Oil	X		X	**(4)**
Fresh water	X		X	**(4)**
Sea water	X		X	**(4)**
Compressed air	X		X	**(4)**
Bilge	X		X	**(4)**
Exhaust Gas		X	X	**(4)**

(1) For piping systems subject to expansion cycles.
(2) Other recognized standards may be accepted where agreed by the Society.
(3) Type test is an alternative. A test procedure is to be submitted to the Society for approval.
(4) Where fitted to engines, pumps, compressors or other sources of high vibrations.

Table 39 : Type tests and procedures for non-metallic expansion joints

	Burst	Fire resistance	Resistance against liquid	Cyclic expansion **(1)**	Ozone resistance	Impulse	Vibration
	[20.2.1], item d) **(2)**	EN ISO 15540:2016 / EN ISO 15541:2016 **(2)**	ISO 1817:2022 **(2)**	**(2) (3)**	ISO 7326:2016 **(2)**	EN ISO 6802:2018 / EN ISO 6803:2017 **(2)**	Ch 3, Sec 6, Tab 1 **(2)**
Fuel Oil	X	X	X	X	**(4)**	**(5)**	**(6)**
Lubricating Oil	X	X	X	X	**(4)**	**(5)**	**(6)**
Hydraulic Oil	X	X	X	X	**(4)**	**(5)**	**(6)**
Thermal Oil	X	X	X	X	**(4)**	**(5)**	**(6)**
Fresh water	X			X	**(4)**	**(5)**	**(6)**
Sea water	X	X		X	**(4)**	**(5)**	**(6)**
Compressed air	X			X	**(4)**	**(5)**	**(6)**
Bilge	X			X	**(4)**	**(5)**	**(6)**

(1) For piping systems subject to expansion cycles.
(2) Other recognized standards may be accepted where agreed by the Society.
(3) Test procedure is to be submitted to the Society for approval
(4) For rubber expansion joints only.
(5) For piping systems subject to pressure pulsation.
(6) Where fitted to engines, pumps, compressors or other sources of high vibrations

Table 40 : Type tests to be performed for air pipe closing appliances

Test to be performed	Type of air closing appliance	
	Float type	Other types
Tightness test **(1)**	X	X
Flow characteristic determination **(2)**	X	X
Impact test of floats	X	
Pressure loading test of floats	X **(3)**	

(1) The tightness test is to be carried out during immerging/emerging in water, in the normal position and at an inclination of 40 degrees.
(2) Pressure drop is to be measured versus flow rate using water.
(3) Only for non-metallic floats.
Note 1: X = required

20.4 Testing of materials

20.4.1 General

a) Detailed specifications for material tests are given in NR216.

b) Requirements for the inspection of welded joints are given in NR216.

c) The requirements of this Article do not apply to piping systems subjected to low temperatures.

20.4.2 Tests for materials

a) Where required in Tab 41, materials used for pipes, valves and other accessories are to be subjected to the following tests:
- tensile test at ambient temperature
- flattening test or bend test, as applicable
- tensile test at the design temperature, except if one of the following conditions is met:
  - the design temperature is below 200°C
  - the mechanical properties of the material at high temperature have been approved
  - the scantling of the pipes is based on reduced values of the permissible stress.

b) Plastic materials are to be subjected to the tests specified in Ch 1, App 1.

20.5 Hydrostatic testing of piping systems and their components

20.5.1 General

Pneumatic tests are to be avoided wherever possible. Where such testing is absolutely necessary in lieu of the hydraulic pressure test, the relevant procedure is to be submitted to the Society for acceptance prior to testing.

20.5.2 Hydrostatic pressure tests of piping

a) Hydrostatic pressure tests are to be carried out to the Surveyor's satisfaction for:
- all class I and II pipes and their integral fittings
- all steam pipes, feed water pipes, compressed air pipes, and fuel oil and other flammable oil pipes with a design pressure greater than 0,35 MPa and their associated integral fittings.

b) These tests are to be carried out after completion of manufacture and before installation on board and, where applicable, before insulating and coating.

Note 1: Classes of pipes are defined in [1.5.2].

c) Pressure testing of small bore pipes (less than 15 mm) may be waived at the discretion of the Surveyor, depending on the application.

d) Where the design temperature does not exceed 300°C, the test pressure is to be equal to 1,5 p.

e) Where the design temperature exceeds 300°C, the test pressure is to be as follows:
- for carbon and carbon-manganese steel pipes, the test pressure is to be equal to 2 p
- for alloy steel pipes, the test pressure P_H is to be determined by the following formula, but need not exceed 2 p:

$$p_H = 1{,}5\frac{K_{100}}{K_T}p$$

where:

K_{100} : Permissible stress for 100°C, as stated in Tab 11

K_T : Permissible stress for the design temperature, as stated in Tab 11.

Note 2: Where alloy steels not included in Tab 11 are used, the permissible stresses will be given special consideration.

f) Where it is necessary to avoid excessive stress in way of bends, branches, etc., the Society may give special consideration to the reduction of the test pressure to a value not less than 1,5 p. The membrane stress is in no case to exceed 90% of the yield stress at the testing temperature.

g) While satisfying the condition stated in b), the test pressure of pipes located on the discharge side of centrifugal pumps driven by steam turbines is not to be less than the maximum pressure liable to be developed by such pumps with closed discharge at the operating speed of their overspeed device.

h) Hydrostatic testing may be carried out after assembly on board of the piping sections under the conditions stated in Ch 1, Sec 11.

20.5.3 Hydrostatic tests of valves, fittings and heat exchangers

a) Valves and fittings non-integral with the piping system and intended for class I and II pipes are to be subjected to hydrostatic tests in accordance with standards recognised by the Society, at a pressure not less than 1,5 times the design pressure P defined in [1.3.2].

b) Valves and distance pieces intended to be fitted on the unit's side below the load waterline are to be subjected to hydrostatic tests under a pressure not less than 0,5 MPa.

c) The shells of appliances such as heaters, coolers and heat exchangers which may be considered as pressure vessels are to be tested under the conditions specified in Ch 1, Sec 3.

d) The nests of tubes or coils of heaters, coolers and heat exchangers are to be submitted to a hydraulic test under the same pressure as the fluid lines they serve.

e) For coolers of internal combustion engines, see Ch 1, Sec 2.

20.5.4 Hydrostatic tests of fuel oil bunkers and tanks not forming part of the unit's structure

Fuel oil bunkers and tanks not forming part of the unit's structure are to be subjected to a hydrostatic test under a pressure corresponding to the maximum liquid level in such spaces or in the air or overflow pipes, with a minimum of 2,40 m above the top. The minimum height is to be 3,60 m for tanks intended to contain fuel oil with a flashpoint below 60°C.

20.5.5 Hydrostatic tests of pumps and compressors

a) Cylinders, covers and casings of pumps and compressors are to be subjected to a hydrostatic test under a pressure at least equal to the test pressure p_H, in MPa, determined by the following formulae:

- $p_H = 1,5\ p$ where $p \le 4$
- $p_H = 1,4\ p + 0,4$ where $4 < p \le 25$
- $p_H = p + 10,4$ where $p > 25$

where:

p : Design pressure, in MPa, as defined in [1.3.2].

p_H is not to be less than 0,4 MPa.

b) While satisfying the condition stated in a), the test pressure for centrifugal pumps driven by steam turbines is not to be less than 1,05 times the maximum pressure likely to be recorded with closed discharge at the operating speed of the overspeed device.

c) Intermediate coolers of compressors are to undergo a hydrostatic test under a pressure at least equal to the pressure p_H defined in a). When determining p_H, the pressure p to be considered is that which may result from accidental communication between the cooler and the adjoining stage of higher pressure, allowance being made for any safety device fitted on the cooler.

d) The test pressure for water spaces of compressors and their intermediate coolers is not to be less than 1,5 times the design pressure in the space concerned, subject to a minimum of 0,2 MPa.

e) For air compressors and pumps driven by internal combustion engines, see Ch 1, Sec 2.

20.5.6 Hydrostatic test of flexible hoses and expansion joints

a) Each flexible hose or expansion joint, together with its connections, is to undergo a hydrostatic test under a pressure at least equal to twice the maximum service pressure, subject to a minimum of 1 MPa. For the expansion joints, or flexible hose used on exhaust gas lines, see [2.7.5], item d).

b) During the test, the flexible hose or expansion joint is to be repeatedly deformed from its geometrical axis.

20.6 Testing of piping system components during manufacturing

20.6.1 Pumps

a) Bilge and fire pumps are to undergo a performance test.

b) Rotors of centrifugal feed pumps for main boilers are to undergo a balancing test.

20.6.2 Centrifugal separators

Centrifugal separators used for fuel oil and lubricating oil are to undergo a running test, normally with a fuel water mixture.

20.7 Inspection and testing of piping systems

20.7.1 The inspections and tests required for piping systems and their components are summarised in Tab 41.

Table 41 : Inspection and testing at works for piping systems and their components

Item(**5**)		Tests for the materials (**1**)		Inspections and tests for the product (**1**)		
		Tests required (**7**)	Type of material certificate(**2**)	During manufacturing (NDT)	After completion	Type of product certificate(**2**)
Raw pipes	class I, ND ≥ 50 class II, ND ≥ 100	[20.4.2]	C(**3**)	[3.6.2], [3.6.3] (**4**)	[20.5.3]	C(**3**)
	class I, ND < 50 class II, ND < 100		W			W (**3**)
Valves and fittings	class I, ND ≥ 50 class II, ND ≥ 100	[20.4.2]	C	[3.6.2], [3.6.3] (**4**)	[20.5.3]	C(**3**)
	class I, ND < 50 class II, ND < 100		W			C(**3**)
Pipes, valves and fittings connected to: • the ship side • the collision bulkhead • fuel oil and lubricating oil tanks and under static pressure	ND ≥ 100	[20.4.2]	C(**3**)	[3.6.2], [3.6.3] (**4**)	[20.4.3], b)	C(**3**)
	ND < 100		W			
Flexible hoses and expansion joints		[20.4.2]	W		[20.5.6]	C(**3**)
Pumps and compressors within piping systems covered by Sections of Part C, Chapter 1(**9**)	when belonging to a class I piping system	[20.4.2]	C(**3**)		[20.5.5]	C(**3**)
	when belonging to a class II piping system	[20.4.2]	W		[20.5.5]	C(**3**)
	bilge and fire pump	[20.4.2]	W		[20.5.5] [20.6.1] a)	C(**3**)
	feed pumps for main boilers	[20.4.2]	C(**3**)	[3.6.2], [3.6.3] (**4**) (**8**)	[20.5.5] [20.6.1] b)	C(**3**)
	forced circulation pumps for main boilers	[20.4.2]	C(**3**)		[20.5.5]	C(**3**)
	when belonging to one of the following class III piping systems if design pressure exceeds 0,35 MP: • boiler feed water or forced circulating • fuel oil or other flammable oil • compressed air	[20.4.2]	W		[20.5.5]	C(**3**)
	when belonging to other class III piping systems				[20.5.5]	W
Centrifugal separators					[20.6.2]	C(**3**)

Item(**5**)		Tests for the materials (**1**)		Inspections and tests for the product (**1**)		
		Tests required (**7**)	Type of material certificate(**2**)	During manufacturing (NDT)	After completion	Type of product certificate(**2**)
Prefabricated pipeline	classes I and II with ND ≥ 65 or t ≥ 10			[3.6.2], [3.6.3] **(6)**	[20.5.2]	C(**3**)
	classes I and II with ND < 65 and t < 10			[3.6.2], [3.6.3] **(6)**	[20.5.2]	W
	class III where design pressure exceeds 0,35 MP, as follows: • steam pipes and feed water pipes • compressed air pipes • fuel oil or other flammable oil pipes				[20.5.2]	W

(1) [x.y.z] = test required, as per referent regulation. In general, the material are to comply with [2.1.2]
(2) C = class certificate; W = works' certificate.
(3) or alternative type of certificate, depending on the Survey Scheme. See Part A.
(4) if of welded construction.
(5) ND = Nominal diameter of the pipe, valve or fitting, in mm.
Class of pipping systems is to be determined in accordance with [1.5.2].
(6) for welded connections.
(7) where required by the table, material tests are to be carried out for the components subject to pressure, such as valve body, pump and compressor casings, etc. They are also to be carried out for the assembling bolts of feed water pumps and forced circulating pumps serving main boilers. Requirements for material testing are detailed in NR216, Chapter 4.
(8) for main parts, before assembling.
(9) for other pumps and compressors, see additional Rules relevant for related system.

Section 8 Thrusters

1 General

1.1 Application

1.1.1 Thrusters developing power equal to 110 kW or more

The requirements of this Section apply to the following types of thrusters developing power equal to 110 kW or more:

- transverse thrusters intended for manoeuvring
- thrusters intended for propulsion and steering.

For azimuth thrusters intended for dynamic positioning, refer to Part F, Chapter 4 of the Ship Rules.

1.1.2 Thrusters developing power less than 110 kW

Thrusters of less than 110 kW are to be built in accordance with sound marine practice and tested as required in [3.2] to the satisfaction of the Surveyor.

1.2 Definitions

1.2.1 Thruster

A thruster is a propeller installed in a revolving nozzle or in a special transverse tunnel in the ship, or a water-jet. A thruster may be intended for propulsion, manoeuvring and steering or any combination thereof. Propulsion propellers in fixed nozzles are not considered thrusters.

1.2.2 Transverse thruster

A transverse thruster is an athwartship thruster developing a thrust in a transverse direction for manoeuvring purposes.

1.2.3 Azimuth thruster

An azimuth thruster is a thruster which has the capability to rotate through 360° in order to develop thrust in any direction.

1.2.4 Continuous duty thruster

A continuous duty thruster is a thruster which is designed for continuous operation, such as a propulsion thruster.

1.2.5 Intermittent duty thruster

An intermittent duty thruster is a thruster designed for operation at full power for a period not exceeding 1 hour, followed by operation at reduced rating for a limited period of time not exceeding a certain percentage of the hours in a day and a certain (lesser) percentage of the hours in a year. In general, athwartship thrusters are intermittent duty thrusters.

1.3 Thrusters intended for propulsion

1.3.1 In general, at least two azimuth thrusters are to be fitted in ships where these are the sole means of propulsion. Single azimuth thruster installations will be specially considered by the Society on a case by case basis.

1.4 Documentation to be submitted

1.4.1 Plans to be submitted for transverse thrusters and azimuth thrusters

For thrusters developing power equal to 110 kW or more, the plans listed in Tab 1 are to be submitted.

1.4.2 Additional data to be submitted

The data and documents listed in Tab 2 are to be submitted by the manufacturer together with the plans.

Table 1 : Plans to be submitted for transverse thrusters and azimuth thrusters

No.	A/I (1)	ITEM
General requirements for all thrusters		
1	I	General arrangement of the thruster
2	A	Propeller, including the applicable details mentioned in Pt C, Ch 1, Sec 8 of the Ship Rules
3	A	Bearing details
4	A	Propeller and intermediate shafts
5	A	Gears, including the applicable details mentioned in Ch 1, Sec 6
Specific requirements for transverse thrusters		
6	A	Structure of the tunnel showing the materials and their thickness
7	A	Structural equipment or other connecting devices which transmit the thrust from the propeller to the tunnel
8	A	Sealing devices (propeller shaft gland and thruster-tunnel connection)
9	A	For the adjustable pitch propellers: pitch control device and corresponding monitoring system
Specific requirements for rotating and azimuth thrusters		
10	A	Structural items (nozzle, bracing, etc.)
11	A	Structural connection to hull
12	A	Rotating mechanism of the thruster
13	A	Thruster control system
14	A	Piping systems connected to thruster
(1) A = To be submitted for approval ; I = To be submitted for information		

Table 2 : Data and documents to be submitted for transverse thrusters and azimuth thrusters

No.	A/I (1)	ITEM
1	I	Rated power and revolutions
2	I	Rated thrust
3	A	Material specifications of the major parts, including their physical, chemical and mechanical properties
4	A	Where parts of thrusters are of welded construction, all particulars on the design of welded joints, welding procedures, heat treatments and non-destructive examinations after welding
5	I	Where applicable, background information on previous operating experience in similar applications
(1) A = To be submitted for approval ; I = To be submitted for information		

2 Design and construction

2.1 Materials

2.1.1 Propellers

For requirements relative to material intended for propellers, see Pt C, Ch 1, Sec 8, [2.1.1] of the Ship Rules.

2.1.2 Other thruster components

For the requirements relative to materials intended for other parts of the thrusters, such as gears, shaft, couplings, etc., refer to the applicable parts of the Rules.

2.2 Transverse thrusters and azimuth thrusters

2.2.1 Prime movers

a) Diesel engines intended for driving thrusters are to comply with the applicable requirements of Ch 1, Sec 2.

b) Electric motors intended for driving thrusters and their feeding systems are to comply with the requirements of Ch 2, Sec 4. In particular:

- provisions are to be made to prevent starting of the motors whenever there are insufficient generators in operation
- intermittent duty thrusters will be the subject of special consideration by the Society.

2.2.2 Propellers

a) For propellers of thrusters intended for propulsion, the requirements of Pt C, Ch 1, Sec 8, [2.5] of the Ship Rules apply.

b) For propellers of thrusters intended for manoeuvring only, the requirements of Pt C, Ch 1, Sec 8, [2.5] of the Ship Rules also apply, although the increase in thickness of 10% does not need to be applied.

2.2.3 Shafts

a) For propeller shafts of thrusters intended for propulsion, the requirements of Pt C, Ch 1, Sec 7, [2.2.3] of the Ship Rules apply.

b) For propellers of thrusters intended for manoeuvring only, the minimum diameter d_S of the shaft, in mm, is not to be less than the value obtained by the following formula:

$$d_S = [(C \cdot M_T)^2 + (D \cdot M)^2]^{1/6} \cdot \left(\frac{1}{1 - Q^4}\right)^{1/3}$$

where:

M_T : Maximum transmitted torque, in N·m; where not indicated, M_T may be assumed as 9550 (P/N)

with:

P : Maximum power of the thruster prime mover, in kW

N : Rotational speed of the propeller, in rev/min.

M : Bending moment, in N·m, at the shaft section under consideration

C : Coefficient equal to:

$$C = 10{,}2 + \frac{28000}{R_{S,MIN}}$$

D : Coefficient equal to:

$$D = \frac{170000}{412 + R_{S,MIN}}$$

with:

$R_{S,MIN}$: Minimum yield strength of the shaft material, in N/mm²

Q :
- for solid shafts: Q = 0
- for hollow shafts: Q = the ratio between the diameter of the hole and the external diameter of the shaft. If Q ≤ 0,3, Q may be assumed equal to 0.

d_S is to be increased by 10% in the case of keyed connection to the propeller in way of key.

2.2.4 Gears

a) Gears of thrusters intended for propulsion are to be in accordance with the applicable requirements of Ch 1, Sec 6, applying the safety factors for propulsion gears.

b) Gears of thrusters intended for manoeuvring only are to be in accordance with the applicable requirements of Ch 1, Sec 6, applying the safety factors for auxiliary gears.

2.2.5 Nozzles and connections to hull for azimuth thrusters

The scantlings of the nozzle connection to the hull and the welding type and size will be specially considered by the Society, which reserves the right to require detailed stress analysis in the case of certain high power installations.

2.2.6 Transverse thruster tunnel

a) The thickness of the tunnel is not to be less than the adjacent part of the hull.

b) Special consideration will be given by the Society to tunnels connected to the hull by connecting devices other than welding.

2.2.7 Electrical supply for steerable thrusters

The generating and distribution system is to be designed in such a way that the steering capability of the thruster can be maintained or regained within a period of 45 seconds, in the event of single failure of the system, and that the effectiveness of the steering capability is not reduced by more than 50% under such conditions. Details of the means provided for this purpose are to be submitted to the Society.

2.3 Alarm, monitoring and control systems

2.3.1 Steering thruster controls

a) Controls for steering are to be provided from the navigating bridge, the machinery control station and locally.

b) Means are to be provided to stop any running thruster at each of the control stations.

c) A thruster angle indicator is to be provided at each steering control station. The angle indicator is to be independent of the control system.

2.3.2 Alarm and monitoring equipment

Tab 3 summarises the minimum alarm and monitoring requirements for propulsion and steering thrusters.

Table 3 : Azimuth thrusters

Symbol convention H = High, HH = High high, G = group alarm L = Low, LL = Low low, I = individual alarm X = function is required, R = remote	Monitoring		Automatic control				
			Thruster			Auxiliary	
Identification of system parameter	Alarm	Indication	Slow-down	Shut-down	Control	Stand by Start	Stop
Steering oil pressure	L						
Oil tank level	L						

3 Testing and certification

3.1 Material tests

3.1.1 Propulsion and steering thrusters

All materials intended for parts transmitting torque and for propeller/impeller blades are to be tested in accordance with the requirements of Pt C, Ch 1, Sec 8, [4.1] of the Ship Rules, in the presence of a Surveyor.

3.1.2 Transverse thrusters

Material testing for parts of athwartship thrusters does not need to be witnessed by a Surveyor, provided full test reports are made available to him.

3.2 Testing and inspection

3.2.1 Thrusters

Thrusters are to be inspected as per the applicable requirements of Pt C, Ch 1, Sec 8, [4.2] of the Ship Rules.

3.2.2 Prime movers

Prime movers are to be tested in accordance with the requirements applicable to the type of mover used.

3.3 Certification

3.3.1 Certification of thrusters

Thrusters are to be individually tested and certified by the Society.

3.3.2 Mass produced thrusters

Mass produced thrusters may be accepted within the framework of the type approval program of the Society.

Section 9 Refrigerating Installations

1 General

1.1 Application

1.1.1 Refrigerating installations on all ships

The minimum safety requirements addressed in this Section are to be complied with for any refrigerating plant installed on board a ship to be classed by the Society. These requirements do not cover any operation or availability aspect of the plants, which are not the subject of class requirements, unless an additional notation is requested.

2 Minimum design requirements

2.1 Refrigerating installation components

2.1.1 General

In general, the specific requirements stated in Part C of the Rules for various machinery and equipment are also applicable to refrigerating installation components.

2.1.2 Pressure vessels and heat exchangers

a) Pressure vessels of refrigerating plants are to comply with the relevant requirements of Ch 1, Sec 3.

b) Vessels intended to contain ammonia or toxic substances are to be considered as class 1 pressure vessels as indicated in Ch 1, Sec 3, [1.4].

c) The materials used for pressure vessels are to be appropriate to the fluid that they contain. Where ammonia is the refrigerant, copper, bronze, brass and other copper alloys are not to be used.

d) Notch toughness of steels used in low temperature plants is to be suitable for the thickness and the lowest design temperature. A check of the notch toughness properties may be required where the working temperature is below minus 40°C.

2.1.3 Piping systems

a) Refrigerant pipes are generally to be regarded as pressure pipes.

b) Refrigerant, brine and sea water pipes are to satisfy the requirements of Ch 1, Sec 7 as applicable.

c) Refrigerant pipes are to be considered as belonging to the following classes:

- class I: where they are intended for ammonia or toxic substances
- class II: for other refrigerants
- class III: for brine.

d) In general, the pipes conveying the cooling medium are not to come into direct contact with the unit's structure; they are to be carefully insulated on their run outside the refrigerated spaces, and more particularly when passing through bulkheads and decks.

e) The materials used for the pipes are to be appropriate to the fluids that they convey. Copper, brass, bronze and other copper alloys are not to be used for pipes likely to convey ammonia. Methods proposed for joining such pipes are to be submitted to the Society for consideration.

f) Notch toughness of the steels used is to be suitable for the application concerned.

g) Where necessary, cooling medium pipes within refrigerated spaces or embedded in insulation are to be externally protected against corrosion; for steel pipes, this protection is to be ensured by galvanisation or equivalent. All useful precautions are to be taken to protect the joints of such pipes against corrosion.

h) The use of plastic pipes will be considered by the Society on a case by case basis.

2.2 Refrigerants

2.2.1 Prohibited refrigerants

The use of the following refrigerants is not allowed for shipboard installations:

- Methyl chloride
- R11 - Trichloromonofluoromethane ($C Cl_3 F$)
- Ethane
- Ethylene
- Ozone depleting substances
- Other substances with lower explosion limit in air of more than 3,5%.

2.2.2 Statutory requirements

Particular attention is to be paid to any limitation on the use of refrigerants imposed by the Administration of the State whose flag the unit is flying.

2.2.3 Toxic or flammable refrigerants

The arrangement of refrigerating machinery spaces of plants using toxic or flammable refrigerants will be the subject of special consideration by the Society.

For specific requirements on spaces intended for plants using ammonia as a refrigerant, see [2.3].

2.3 Special requirements for ammonia (R717)

2.3.1 Refrigerating machinery compartment

a) The refrigerating machinery compartment and the compartments where ammonia bottles are stored are to be separated by gastight bulkheads from the accommodation spaces, the engine room (including the shaft tunnel) and other machinery spaces intended for essential services. This requirement does not apply to plants using less than 25 kg of ammonia.

b) The space is to be arranged with a ventilation system, distinct from that of other spaces, having a capacity of at least 30 changes per hour. Provision is to be made for starting and stopping the ventilation fans from outside the refrigerated space.

c) A fire-extinguishing water spray system is to be provided for any ammonia machinery space, in particular in way of the access doors. The actuating device is to be fitted closed to the entrance outside the protected space.

d) At least two access doors are to be provided. One of these doors is to be used for emergency and is to lead directly to an open space. The doors are to open outwards and are to be self-closing.

e) Where the access to a refrigerating machinery space is through an accommodation or machinery space, the ventilation of the former is to be such as to keep it under negative pressure with respect to the adjacent space, or, alternatively, the access is to be provided with an air lock.

f) An independent bilge system is to be provided for the refrigerating machinery space.

g) At least two sets of breathing apparatus and protective clothing are to be available outside and in the vicinity of the ammonia machinery space.

h) All electrical equipment and apparatus in the space is to be arranged such that it may be shut off by a central switch located outside the space. This switch is not to control the ventilation system.

2.3.2 Ammonia in machinery spaces

When installation of ammonia is allowed in the machinery space in accordance with the provision of [2.3.1] item a), the area where ammonia machinery is installed is to be served by a hood with a negative ventilation system, having a capacity of not less than 30 changes per hour, independent from any other ventilation system of the unit, so as to prevent any leakage of ammonia from dissipating into other areas.

The periphery of the hood is to be fitted with a drenching water system operable locally and from the outside of the machinery space.

2.3.3 Unattended machinery spaces

Where the refrigerating machinery spaces are not permanently attended, a gas detection system with an audible and visual alarm is to be arranged in a suitable location. This system is also to stop the compressor when a flammable gas concentration is reached.

2.3.4 Segregation

Ammonia piping is not to pass through accommodation spaces.

Section 10 Self Elevating Systems

1 General

1.1

1.1.1 For self elevating systems, reference is made to NR534 Classification of Self-Elevating Units.

Section 11 Tests on Board

1 General

1.1 Application

1.1.1 This Section covers the tests to be carried out on board the unit, both at the moorings and during sea trials. Such tests are additional to the workshop tests required in the other Sections of this Chapter.

1.1.2 For self-propelled units, refer to Pt C, Ch 1, Sec 15 of the Ship Rules, in particular as regards:
- navigation and manoeuvring
- tests of electric propulsion systems
- tests of propulsion engines, turbines, and gears
- tests of propulsion shafting and propellers
- tests of steering gears.

1.2 Purpose of the tests on board the unit

1.2.1 On board tests are intended to demonstrate that the essential machinery and associated systems are functioning properly, in respect of the criteria imposed by the Rules. The tests are to be witnessed by a Surveyor.

1.3 Documentation to be submitted

1.3.1 A comprehensive list of the tests intended to be carried out by the shipyard is to be submitted to the Society.
For each test, the following information is to be provided:
- scope of the test
- parameters to be recorded.

2 General requirements for on board tests

2.1 Trials at the moorings

2.1.1 Trials at the moorings are to demonstrate the following:
- satisfactory operation of the machinery
- quick and easy response to operational commands
- protection of the various installations, as regards:
  - the protection of mechanical parts
  - the safeguards for personnel
- accessibility for cleaning, inspection and maintenance.

Where the above features are not deemed satisfactory and require repairs or alterations, the Society reserves the right to require the repetition of the trials at the moorings, either wholly or in part, after such repairs or alterations have been carried out.

2.2 Sea trials

2.2.1 Scope of the tests

Sea trials are to be conducted after the trials at the moorings and are to include the following:
- demonstration of the proper operation of the main and auxiliary machinery, including monitoring, alarm and safety systems, under realistic service conditions
- for propelled units, check of the propulsion capability when one of the essential auxiliaries becomes inoperative
- detection of dangerous vibrations by taking the necessary readings when required.

3 On board tests for machinery

3.1 Tests of boilers

3.1.1 General

The satisfactory operation of the main and auxiliary boilers supplying essential services is to be ascertained in all operating conditions during the trials at the moorings and the sea trials.

3.1.2 Tests to be performed

After installation on board, the following tests are to be carried out in the presence of the Surveyor:

- Test in the hot condition of boilers and superheaters
- Accumulation tests and setting of safety valves of boilers and superheaters
  - safety valves are to be set to lift at a pressure not exceeding 103% of the design pressure
  - for boilers fitted with superheaters, the safety valves of the latter are to be set to lift before or, at the latest, at the same time as the valves of the saturated steam chest.
- Verification that, at the maximum steaming rate, the boiler pressure does not exceed 110% of the design pressure when the stop valves of the boiler, except those which must remain open for the burning operation, are closed. The boiler is to be fed so that the water level remains normal throughout the test. The test is to last:
  - 15 minutes for fire tube boilers
  - 7 minutes for water tube boilers.
- Test and simulation of all safety devices, alarms, shut-off and automatic starting of standby equipment.

3.1.3 Alternative requirement

a) When it is recognised, for certain types of boilers, that accumulation tests might endanger the superheaters, the omission of such tests may be considered.

b) Such omission can be permitted, however, only if the drawings and the size of safety valves have been reviewed by the Society, and provided that the safety valves are of a type whose relieving capacity has been established by a test carried out in the presence of the Surveyor, or in other conditions deemed equivalent to those of the actual boiler.

c) When the Society does not agree to proceed with an accumulation test, the valve manufacturer is to supply, for each safety valve, a certificate specifying its relieving capacity for the working conditions of the boiler. In addition, the boiler manufacturer is to supply a certificate specifying the maximum steam capacity of the boiler.

3.2 Tests of diesel engines

3.2.1 Objectives

The purpose of the shipboard testing is to verify compatibility with power transmission and driven machinery in the system, control systems and auxiliary systems necessary for the engine and integration of engine / shipboard control systems, as well as other items that had not been dealt with in the FAT (Factory Acceptance Testing).

3.2.2 Starting capacity

Starting manoeuvres are to be carried out in order to verify that the capacity of the starting media satisfies the required number of start attempts.

3.2.3 Monitoring and alarm system

The monitoring and alarm systems are to be checked to the full extent for all engines, except items already verified during the works trials.

3.2.4 Test loads

a) Test loads for various engine applications are given below. In addition, the scope of the trials may be expanded depending on the engine application, service experience, or other relevant reasons.

b) The suitability of the engine to operate on fuels intended for use is to be demonstrated.

c) Tests other than those listed below may be required by statutory instruments (e.g. EEDI verification).

d) Propulsion engines driving fixed pitch propeller or impeller.
   - At rated engine speed n_0: at least 4 hours.
   - At engine speed 1,032 n_0 (if engine adjustment permits): 30 min.
   - At approved intermittent overload (if applicable): testing for duration as agreed with the manufacturer.
   - Minimum engine speed to be determined.
   - The ability of reversible engines to be operated in reverse direction is to be demonstrated.

Note 1: During stopping tests according to IMO Resolution MSC.137 (76), see [3.2.5] for additional requirements in the case of a barred speed range.

e) Propulsion engines driving controllable pitch propellers.
   - At rated engine speed n0 with a propeller pitch leading to rated engine power (or to the maximum achievable power if 100% cannot be reached): at least 4 hours.
   - At approved intermittent overload (if applicable): testing for duration as agreed with the manufacturer.
   - With reverse pitch suitable for manoeuvring, see [3.2.5] for additional requirements in the case of a barred speed range.

f) Engine(s) driving generator(s) for electrical propulsion and/or main power supply
   - At 100% power (rated electrical power of generator): at least 60 min.
   - At 110% power (rated electrical power of generator): at least 10 min.

Note 2: Each engine is to be tested 100% electrical power for at least 60 min and 110% of rated electrical power of the generator for at least 10 min. This may, if possible, be done during the electrical propulsion plant test, which is required to be tested with 100% propulsion power (i.e. total electric motor capacity for propulsion) by distributing the power on as few generators as possible. The duration of this test is to be sufficient to reach stable operating temperatures of all rotating machines or for at least 4 hours. When some of the gen. set(s) cannot be tested due to insufficient time during the propulsion system test mentioned above, those required tests are to be carried out separately.

- Demonstration of the generator prime movers' and governors' ability to handle load steps as described in Ch 1, Sec 2, [2.7].

g) Propulsion engines also driving power take off (PTO) generator.
- 100% engine power (MCR) at corresponding speed n_0: at least 4 hours.
- 100% propeller branch power at engine speed n_0 (unless covered in previous bullet point): 2 hours.
- 100% PTO branch power at engine speed n0: at least 1 hour.

h) Engines driving auxiliaries.
- 100% power (MCR) at corresponding speed n_0: at least 30 min.
- Approved intermittent overload: testing for duration as approved.

3.2.5 Torsional vibration - barred speed range

Where a barred speed range (bsr) is required, passages through this bsr, both accelerating and decelerating, are to be demonstrated. The times taken are to be recorded and are to be equal to or below those times stipulated in the approved documentation, if any. This also includes when passing through the bsr in reverse rotational direction, especially during the stopping test.

Note 1: Applies both for manual and automatic passing-through systems.

The ship's draft and speed during all these demonstrations is to be recorded. In the case of a controllable pitch propeller, the pitch is also to be recorded.

The engine is to be checked for stable running (steady fuel index) at both upper and lower borders of the bsr. Steady fuel index means an oscillation range less than 5% of the effective stroke (idle to full index).

3.3 Tests of steam turbines

3.3.1 Turbines driving electric generators or auxiliary machines are to be run for at least 4 hours at their rated power and for 30 minutes at 110% of rated power.

During the trials all safety, alarm, shut-off and control systems associated to the turbine are to be tested or properly simulated.

3.4 Tests of gas turbines

3.4.1 Turbines driving electric generators or auxiliary machines are to be run for at least 4 hours at their rated power and for 30 minutes at 110% of rated power.

During the trials all safety, alarm, shut-off and control systems associated to the turbine are to be tested or properly simulated.

3.5 Tests of gears

3.5.1 Tests during sea trials

During the sea trials, the performance of reverse and/or reduction gearing is to be verified, both when running ahead and astern.

In addition, the following checks are to be carried out:

- check of the bearing and oil temperature
- detection of possible gear hammering
- test of the monitoring, alarm and safety systems.

3.5.2 Check of the tooth contact

- Prior to the sea trials, the tooth surfaces of the pinions and wheels are to be coated with a thin layer of suitable coloured compound.

  Upon completion of the trials, the tooth contact is to be inspected. The contact marking is to appear uniformly distributed without hard bearing at the ends of the teeth and without preferential contact lines.

  The tooth contact is to comply with Tab 1.
- The verification of tooth contact at sea trials by methods other than that described above will be given special consideration by the Society.
- In the case of reverse and/or reduction gearing with several gear trains mounted on roller bearings, manufactured with a high standard of accuracy and having an input torque not exceeding 20000 N·m, the check of the tooth contact may be reduced at the Society's discretion.

  Such a reduction may also be granted for gearing which has undergone long workshop testing at full load and for which the tooth contact has been checked positively.

  In any case, the teeth of the gears are to be examined by the Surveyor after the sea trials. Subject to the results, additional inspections or re-examinations after a specified period of service may be required.

Table 1 : Tooth contact for gears

Heat treatment and machining	Percentage of tooth contact	
	across the whole face width	of the tooth working depth
quenched and tempered, cut	70	40
• quenched and tempered, shaved or ground • surface-hardener	90	40

3.6 Tests of piping systems

3.6.1 Hydrostatic tests of piping after assembly on board

- When the hydrostatic tests of piping referred to in Ch 1, Sec 7, [20.5.2] are carried out on board, they may be carried out in conjunction with the leak tests required in [3.6.2].
- Low pressure pipes, such as bilge or ballast pipes are to be tested, after fitting on board, under a pressure at least equal to the maximum pressure to which they can be subjected in service. Moreover, the parts of such pipes which pass, outside pipe tunnels, through compartments for ballast water, fresh water, fuel or liquid cargo, are to be fitted before the hydraulic test of the corresponding compartments.
- Heating coils in oil fuel tanks or in liquid cargo tanks and fuel pipes are to be subjected, after fitting on board, to a hydraulic test under a pressure not less than 1,5 times the design pressure, with a minimum of 4 bars.

3.6.2 Leak tests

Except otherwise permitted by the Society, all piping systems are to be leak tested under operational conditions after completion on board.

3.6.3 Functional tests

During the sea trials, piping systems serving propulsion and auxiliary machinery, including the associated monitoring and control devices, are to be subjected to functional tests at the nominal power of the machinery. Operating parameters (pressure, temperature, consumption) are to comply with the values recommended by the equipment manufacturer.

3.6.4 Performance tests

The Society reserves the right to require performance tests, such as flow rate measurements, should doubts arise from the functional tests.

4 Inspection of machinery after sea trials

4.1 General

4.1.1 For all types of essential machinery, those parts which have not operated satisfactorily in the course of the sea trials, or which have caused doubts to be expressed as to their proper operation, are to be disassembled or opened for inspection.

Machinery or parts which are opened up or disassembled for other reasons are to be similarly inspected.

Should the inspection reveal defects or damage of some importance, the Society may require other similar machinery or parts to be opened up for inspection.

An exhaustive inspection report is to be submitted to the Society for information.

4.2 Diesel engines

4.2.1 In general, for all diesel engines, the following items are to be verified:

- the deflection of the crankshafts
- the cleanliness of the lubricating oil filters.

In the case of engines for which power tests have not been carried out in the workshop, some parts, agreed upon by the interested parties, are to be disassembled for inspection after the sea trials.

Appendix 1 Plastic Pipes

1 General

1.1 Application

1.1.1 These requirements are applicable to pipes / piping systems made of plastic or made predominantly of other material than metal.

1.1.2 The requirements are not applicable to mechanical and flexible couplings used in metallic piping systems.

1.1.3 Piping systems made of thermoplastic materials, such as polyethylene (PE), polypropylene (PP), polybutylene (PB) and intended for non-essential services are to meet the requirements of recognized standards and of Articles [3] and [4] of this Appendix.

1.2 Use of plastic pipes

1.2.1 Plastic may be used in piping systems in accordance with the provisions of Ch 1, Sec 7, [2.1.3], provided the following requirements are complied with.

1.2.2 Plastic pipes are to be type approved by the Society.

1.3 Definitions

1.3.1 Plastic

Plastic includes both thermoplastic and thermosetting plastic materials with or without reinforcement, such as PVC and FRP (reinforced plastics pipes). Plastic includes synthetic rubber and materials of similar thermo/mechanical properties.

1.3.2 Piping systems

In this Appendix, pipes/piping systems means those made of plastic(s) and includes the pipes, fittings, system joints, method of joining and any internal or external liners, coverings and coatings required to comply with the performance criteria.

1.3.3 Joints

Joints include all pipe assembling devices or methods, such as adhesive bonding, laminating, welding, etc.

1.3.4 Fittings

Fittings include bends, elbows, fabricated branch pieces, etc. made of plastic materials.

1.3.5 Nominal pressure

Nominal pressure is the maximum permissible working pressure which is to be determined in accordance with [2.2.3].

1.3.6 Fire endurance

Fire endurance is the capability of the piping system to perform its intended function, i.e. maintain its strength and integrity, for some predicted period of time while exposed to fire.

1.4 Recognised standards

1.4.1 The following standard is recognised by the Society for design, manufacture, installation and qualification of plastic pipe systems:

- ISO 14692:2002: Petroleum and natural gas industries - Glass-reinforced plastics (GRP) piping.

Alternative standards may also be considered subject to the Society approval.

2 Design of plastic piping systems

2.1 General

2.1.1 Specification

The specification of the plastic piping is to be submitted in accordance with the provisions of Ch 1, Sec 7, [1.2.2]. It is to comply with a recognised national or international standard approved by the Society. In addition, the requirements stated below are to be complied with.

2.1.2 Marking

Plastic pipes and fittings are to be permanently marked with identification, including:

- pressure ratings
- the design standards that the pipe or fitting is manufactured in accordance with
- the material of which the pipe or fitting is made.

2.2 Strength

2.2.1 General

a) The piping is to have sufficient strength to take account of the most severe concomitant conditions of pressure, temperature, the weight of the piping itself and any static and dynamic loads imposed by the design or environment.

b) The strength of the pipes is to be determined at the maximum possible working temperature by the tests mentioned in [4.1.2].

2.2.2 Pipe thickness

Plastic pipes thickness is to be calculated using a maximum allowable stress not higher than 1/7 of the ultimate tensile strength of the material at the service temperature.

Minimum pipe thickness is to be in accordance with a recognised standard as defined in [1.4].

2.2.3 Permissible pressure

Piping systems are to be designed for a nominal pressure determined from the following conditions:

a) Internal pressure

The nominal internal pressure is not to exceed the smaller of:

- P_{sth} / 4
- P_{lth} / 2,5

where:

P_{sth} : Short-term hydrostatic test failure pressure, in MPa

P_{lth} : Long-term hydrostatic test failure pressure (>100 000 hours), in MPa.

b) External pressure (to be considered for any installation subject to vacuum conditions inside the pipe or a head of liquid acting on the outside of the pipe)

The nominal external pressure is not to exceed P_{col} / 3, where:

P_{col} : Collapse pressure.

Note 1: The external pressure is the sum of the vacuum inside the pipe and the static pressure head outside the pipe.

c) The collapse pressure is not to be less than 0,3 MPa.

2.2.4 Permissible temperature

a) In general, plastic pipes are not to be used for media with a temperature above 60°C or below 0°C, unless satisfactory justification is provided to the Society.

b) The permissible working temperature range depends on the working pressure and is to be justified by appropriate tests.

c) The maximum permissible working temperature is to be at least 20°C lower than the minimum heat distortion temperature of the pipe material, determined according to ISO 75 method A or equivalent.

d) The minimum heat distortion temperature is not to be less than 80°C.

2.2.5 Axial strength

a) The sum of the longitudinal stresses due to pressure, weight and other loads is not to exceed the allowable stress in the longitudinal direction.

b) In the case of fibre reinforced plastic pipes, the sum of the longitudinal stresses is not to exceed half of the nominal circumferential stress derived from the nominal internal pressure condition (see [2.2.3]).

2.2.6 Impact resistance

Plastic pipes and joints are to have a minimum resistance to impact in accordance with a recognised national or international standard.

2.3 Requirements depending on service and/or location

2.3.1 Fire endurance

The requirements for fire endurance of plastic pipes and their associated fittings are given in Tab 1 for the various systems and locations where the pipes are used.

Specifically:

- A 60 min. fire endurance test in dry conditions is to be carried out according to Appendix 1 of IMO Resolution A.753(18), where indicated "L1" in Tab 1.

  Level "L1W" refers to piping systems similar to "L1" systems except these systems do not carry flammable fluid or any gas and a maximum 5% flow loss in the system after exposure is acceptable.
- A 30 min. fire endurance test in dry conditions is to be carried out according to Appendix 1 of IMO Resolution A.753(18), where indicated "L2" in Tab 1.

  Level "L2W" refers to piping systems similar to "L2" systems except a maximum 5% flow loss in the system after exposure is acceptable.
- A 30 min. fire endurance test in wet conditions is to be carried out according to Appendix 1 of IMO Resolution A.753(18), where indicated "L3" in Tab 1.
- No fire endurance test is required, where indicated "0" in Tab 1.
- A metallic material with a melting point greater than 925°C is to be used, where indicated "X" in Tab 1.

Note 1: "NA" means "not applicable".

Table 1 : Fire endurance of piping systems

PIPING SYSTEM		LOCATION								
		Machinery spaces of category A **(10)**	Other machinery spaces and pump rooms **(11)**	Cargo pump rooms **(12)**	Cargo tanks **(13)**	Fuel oil tanks **(14)**	Ballast water tanks **(15)**	Cofferdams, void spaces, pipe tunnels and ducts **(16)**	Accommodation, service and control spaces **(17)**	Open decks **(18)(19)**
CARGO (FLAMMABLE CARGOES WITH FLASH POINT ≤ 60°C)										
Cargo lines		NA	NA	L1	0	NA	0 **(9)**	0	NA	L1 **(2)**
Crude oil washing lines		NA	NA	L1	0	NA	0 **(9)**	0	NA	L1 **(2)**
Vent lines		NA	NA	NA	0	NA	0 **(9)**	0	NA	X
INERT GAS										
Water seal effluent line		NA	NA	0 **(1)**	0 **(1)**	0 **(1)**	0 **(1)**	0 **(1)**	NA	0
Scrubber effluent line		0 **(1)**	0 **(1)**	NA	NA	NA	0 **(1)**	0 **(1)**	NA	0
Main line		0	0	L1	NA	NA	NA	0	NA	L1 **(6)**
Distribution line		NA	NA	L1	0	NA	NA	0	NA	L1 **(2)**
FLAMMABLE LIQUIDS (FLASH POINT > 60°C)										
Cargo lines		X	X	L1	NA **(3)**	0	0 **(9)**	0	NA	L1
Fuel oil		X	X	L1	NA **(3)**	0	0	0	L1	L1
Lubricating oil		X	X	L1	NA	NA	NA	0	L1	L1
Hydraulic oil		X	X	L1	0	0	0	0	L1	L1
SEA WATER**(1)**										
Bilge main and branches		L1	L1	L1	NA	0	0	0	NA	L1
Fire main and water spray	dry	L1	L1	L1	NA	NA	0	0	X	L1
	wet	L1	L1	L1	NA	NA	0	0	X	L3
Foam system		L1W	L1W	L1W	NA	NA	NA	0	L1W	L1W
Sprinkler system		L1W	L1W	L3	NA	NA	0	0	L3	L3
Ballast		L3	L3	L3	0 **(9)**	0	0	0	L2	L2W
Cooling water, essential services		L3	L3	NA	NA	NA	0	0	NA	L2W
Tank cleaning services, fixed machines		NA	NA	L3	0	NA	0	0	NA	L3 **(2)**
Non-essential systems		0	0	0	NA	0	0	0	0	0
FRESH WATER										
Cooling water, essential services		L3	L3	NA	NA	0	0	0	L3	L3
Condensate return		L3	L3	L3	NA	NA	NA	0	0	0
Non-essential systems		0	0	0	NA	0	0	0	0	0

PIPING SYSTEM	LOCATION								
	Machinery spaces of category A **(10)**	Other machinery spaces and pump rooms **(11)**	Cargo pump rooms **(12)**	Cargo tanks **(13)**	Fuel oil tanks **(14)**	Ballast water tanks **(15)**	Cofferdams, void spaces, pipe tunnels and ducts **(16)**	Accommodation, service and control spaces **(17)**	Open decks **(18)(19)**
SANITARY, DRAINS, SCUPPERS									
Deck drains (internal)	L1W **(4)**	L1W **(4)**	NA	NA	0	0	0	0	0
Sanitary drains (internal)	0	0	NA	NA	0	0	0	0	0
Scuppers and discharges (over-board)	0 **(1) (7)**	0 **(1) (7)**	0 **(1) (7)**	0	0	0	0	0 **(1) (7)**	0
SOUNDING, AIR									
Water tanks, dry spaces	0	0	0	0 **(9)**	0	0	0	0	0
Oil tanks (flash point > 60°C)	X	X	X	X **(3)**	0	0 **(9)**	0	X	X
MISCELLANEOUS									
Control air	L1 **(5)**	L1 **(5)**	L1 **(5)**	NA	0	0	0	L1 **(5)**	L1 **(5)**
Service air (non-essential)	0	0	0	NA	0	0	0	0	0
Brine	0	0	NA	NA	NA	NA	0	0	0
Auxiliary low steam pressure (≤ 0,7 MPa)	L2	L2	0 **(8)**	0	0	0	0	0 **(8)**	0 **(8)**

(1) Where non-metallic piping is used, remote controlled valves to be provided at the shell (valve is to be controlled from outside space).
(2) Remote closing valves to be provided at the cargo tanks.
(3) When cargo tanks contain flammable liquids with flash point > 60 °C, "0" may replace "NA" or "X".
(4) For drains serving only the space concerned, "0" may replace "L1".
(5) When controlling functions are not required by the Rules, "0" may replace "L1".
(6) For pipes between machinery space and deck water seal, "0" may replace "L1".
(7) Scuppers serving open decks in positions 1 and 2, as defined in Pt B, Ch 1, Sec 2, are to be "X" throughout unless fitted at the upper end with a means of closing capable of being operated from a position above the freeboard deck in order to prevent downflooding.
(8) For essential services, such as fuel oil tank heating and unit's whistle, "X" is to replace "0".
(9) For floating production storage and offloading units, "NA" is to replace "0".
(10) Machinery spaces of category A are defined in Ch 1, Sec 1, [1.3.1].
(11) Spaces, other than category A machinery spaces and cargo pumps rooms, containing propulsion machinery, boilers, steam and internal combustion engines, generators and major electrical machinery, pumps, oil filling stations, refrigerating, stabilising, ventilation and air-conditioning machinery, and similar spaces, and trunks to such spaces.
(12) Spaces containing cargo pumps, and entrances and trunks to such spaces.
(13) All spaces used for liquid cargo and trunks to such spaces.
(14) All spaces used for fuel oil (excluding cargo tanks) and trunks to such spaces.
(15) All spaces used for ballast water and trunks to such spaces.
(16) Empty spaces between two bulkheads separating two adjacent compartments.
(17) Accommodation spaces, service spaces and control stations are defined in Ch 4, Sec 1, [3].
(18) Open decks are defined in SOLAS Chapter II-2 Regulation 9, 2.4.2.2 (10).
(19) Level of fire endurance of plastic pipes on hull deck of Offshore Units (when there is significant fire risk) should comply with the results of the Fire Risk Analysis Study & Report, unless agreement of the National Authority is provided.
(For Fire water system, reference is made to US Coast Guard's PFM 1-98: Policy File Memorandum on the Fire Performance Requirements for Plastic Pipe per IMO Resolution A.753(18)).

Note 1: For definitions of "L1", "L1W", "L2", "L2W", "L3", "0", "X" and "NA", refer to [2.3.1].

2.3.2 Flame spread

a) All pipes, except those fitted on open decks and within tanks, cofferdams, pipe tunnels and ducts, are to have low spread characteristics not exceeding average values listed in IMO Resolution A.653(16). Other recognised national standards may also be referred to.

b) Surface flame characteristics are to be determined using the procedure given in IMO Res. A.653(16) with regard to the modifications due to the curvilinear pipe surfaces as listed in Appendix 3 of Res. A.753(18).

2.3.3 Fire protection coating

Where a fire protective coating of pipes and fittings is necessary for achieving the fire endurance level required, it is to meet the following requirements:

- The pipes are generally to be delivered from the manufacturer with the protective coating on.
- The fire protection properties of the coating are not to be diminished when exposed to salt water, oil or bilge slops. It is to be demonstrated that the coating is resistant to products likely to come into contact with the piping.
- In considering fire protection coatings, such characteristics as thermal expansion, resistance against vibrations and elasticity are to be taken into account.
- The fire protection coatings are to have sufficient resistance to impact to retain their integrity.

2.3.4 Electrical conductivity

a) Piping systems conveying fluids with a conductivity less than 1000 pS/m (1pS/m = 10^{-9} siemens per meter), such as refined products and distillates, are to be made of conductive pipes.

b) Regardless of the fluid to be conveyed, plastic pipes passing through hazardous areas are to be electrically conductive.

c) Where electrical conductivity is to be ensured, the resistance of the pipes and fittings is not to exceed:

$1 \times 10^5\ \Omega/m$.

d) Where pipes and fittings are not homogeneously conductive, conductive layers are to be provided, suitably protected against the possibility of spark damage to the pipe wall.

2.4 Pipe and fitting connections

2.4.1 General

a) The strength of connections is not to be less than that of the piping system in which they are installed.

b) Pipes and fittings may be assembled using adhesive-bonded, welded, flanged or other joints.

c) When used for joint assembly, adhesives are to be suitable for providing a permanent seal between the pipes and fittings throughout the temperature and pressure range of the intended application.

d) Tightening of joints, where required, is to be performed in accordance with the manufacturer's instructions.

e) Procedures adopted for pipe and fitting connections are to be submitted to the Society for approval, prior to commencing the work.

2.4.2 Bonding of pipes and fittings

a) The procedure for making bonds is to be submitted to the Society for qualification. It is to include the following:
   - materials used
   - tools and fixtures
   - joint preparation requirements
   - cure temperature
   - dimensional requirements and tolerances
   - acceptance criteria for the test of the completed assembly.

b) When a change in the bonding procedure may affect the physical and mechanical properties of the joints, the procedure is to be requalified.

3 Arrangement and installation of plastic pipes

3.1 General

3.1.1 Plastic pipes and fittings are to be installed by the Shipyard in accordance with the Manufacturer's guidelines and taking account of the following provisions, as deemed necessary.

3.2 Supporting of the pipes

3.2.1

a) Selection and spacing of pipe supports in shipboard systems are to be determined as a function of allowable stresses and maximum deflection criteria.

b) The selection and spacing of pipe supports are to take into account the following data:
   - pipe dimensions
   - mechanical and physical properties of the pipe material
   - mass of pipe and contained fluid
   - external pressure
   - operating temperature

- thermal expansion effects
- load due to external forces
- thrust forces
- water hammer
- vibrations
- maximum accelerations to which the system may be subjected.

Combinations of loads are also to be considered.

c) Support spacing is not to be greater than the pipe manufacturer's recommended spacing.

3.2.2 Each support is to evenly distribute the load of the pipe and its content over the full width of the support. Measures are to be taken to minimise wear of the pipes where they are in contact with the supports.

3.2.3 Heavy components in the piping system such as valves and expansion joints are to be independently supported.

3.3 Provision for expansion

3.3.1 Suitable provision is to be made in each pipeline to allow for relative movement between pipes made of plastic and the steel structure, having due regard to:

- the high difference in the coefficients of thermal expansion
- deformations of the ship's structure.

3.3.2 Calculations of the thermal expansions are to take into account the system working temperature and the temperature at which the assembly is performed.

3.4 External loads

3.4.1 When installing the piping, allowance is to be made for temporary point loads, where applicable. Such allowance is to include at least the force exerted by a load (person) of 100 kg at mid-span on any pipe of more than 100 mm nominal outside diameter.

3.4.2 Pipes are to be protected from mechanical damage where necessary.

3.5 Earthing

3.5.1 Where, in pursuance of [2.3.4], pipes are required to be electrically conductive, the resistance to earth from any point in the piping system is not to exceed $1 \times 10^6\ \Omega$.

3.5.2 Where provided, earthing wires are to be accessible for inspection.

3.6 Penetration of fire divisions and watertight bulkheads or decks

3.6.1 Where plastic pipes pass through "A" or "B" class divisions, arrangements are to be made to ensure that fire endurance is not impaired. These arrangements are to be tested in accordance with 'Recommendations for Fire Test Procedures for "A", "B" and "F" Bulkheads' (IMO Resolution A754 (18) as amended).

3.6.2 When plastic pipes pass through watertight bulkheads or decks, the watertight integrity of the bulkhead or deck is to be maintained. If the bulkhead or deck is also a fire division and destruction by fire of plastic pipes may cause the inflow of liquid from tanks, a metallic shut-off valve operable from above the freeboard deck is to be fitted at the bulkhead or deck.

3.7 Systems connected to the hull

3.7.1 Bilge and sea water systems

a) Where, in pursuance of [2.3.1], plastic pipes are permitted in bilge and sea water systems, the ship side valves required in Ch 1, Sec 7, [2.9] and, where provided, the connecting pipes to the shell are to be made of metal in accordance with Ch 1, Sec 7, [2.1].

b) Ship side valves are to be provided with remote control from outside the space concerned. See Tab 1, footnote **(1)**.

3.7.2 Scuppers and sanitary discharges

a) Where, in pursuance of [2.3.1], plastic pipes are permitted in scuppers and sanitary discharge systems connected to the shell, their upper end is to be fitted with closing means operated from a position above the freeboard deck in order to prevent downflooding. See Tab 1, footnotes **(1)** and **(7)**.

b) Discharge valves are to be provided with remote control from outside the space concerned.

3.8 Application of fire protection coatings

3.8.1 Where necessary for the required fire endurance as stated in [2.3.3], fire protection coatings are to be applied on the joints, after performing hydrostatic pressure tests of the piping system.

3.8.2 The fire protection coatings are to be applied in accordance with the manufacturer's recommendations, using a procedure approved in each case.

4 Certification, inspection and testing of plastic piping

4.1 Certification

4.1.1 Type approval

Plastic pipes and fittings are to be of a type approved by the Society for the intended use. For this purpose, the material tests required in [4.1.2] and, where applicable, the bonding qualification test detailed in [4.1.3] are to be performed.

4.1.2 Material tests

a) Tests are to be performed according to a procedure approved by the Society to determine, for each type of pipe and fitting, the following characteristics:
   - ultimate tensile strength
   - short-term and long-term design strength
   - collapse
   - impact resistance
   - fire endurance
   - low flame spread characteristics
   - electrical resistance (for electrically conductive pipes).

   For the above tests, representative samples of pipes and fittings are to be selected to the satisfaction of the Society.

b) The ultimate tensile strength is to be determined by means of a hydrostatic test on pipe samples subjected to increasing pressure up to failure, the pressure being increased at such a rate that failure occurs in not less than 5 minutes. Such test is to be carried out under the standard conditions: atmospheric pressure equal to 100 kPa, relative humidity 30%, environmental and carried fluid temperature 298 K (25°C).

   The ultimate tensile strength is to be determined using the tangential stress based on the initial diameter of the pipe. Small deformations of the pipe sample during the test may be accepted.

c) Alternatively, hydrostatic test failure pressure and collapse pressure may be determined by a combination of tests and calculations, subject to the agreement of the Society.

d) After the impact resistance test, the specimen is to be subjected to hydrostatic pressure equal to 2,5 times the design pressure for at least 1 hour.

4.1.3 Bonding qualification test

a) A test assembly is to be fabricated in accordance with the procedure to be qualified. It is to consist of at least one pipe-to-pipe joint and one pipe-to-fitting joint.

b) When the test assembly has been cured, it is to be subjected to a hydrostatic test pressure at a safety factor of 2,5 times the design pressure of the test assembly, for not less than one hour. No leakage or separation of joints is allowed. The test is to be conducted so that the joint is loaded in both longitudinal and circumferential directions.

c) Selection of the pipes used for the test assembly is to be in accordance with the following:
   - when the largest size to be joined is 200 mm nominal outside diameter or smaller, the test assembly is to be the largest piping size to be joined
   - when the largest size to be joined is greater than 200 mm nominal outside diameter, the size of the test assembly is to be either 200 mm or 25% of the largest piping size to be joined, whichever is the greater.

4.1.4 Personnel qualification

All pipes, fittings and related items are to be installed by qualified GRP pipe fitters approved by a qualified GRP piping inspector. GRP pipe fitters and GRP piping inspectors are to be qualified in compliance with a recognized standard as defined in [1.4].

GRP fitters approved by the manufacturer of the bonding product may be accepted provided the approval procedure is accepted by the Society.

4.2 Quality control during manufacture

4.2.1 The Manufacturer is to have quality system that meets ISO 9000 series standards or equivalent. The quality system is to consist of elements necessary to ensure that pipes and fittings are produced with consistent and uniform mechanical and physical properties.

In case the Manufacturer does not have an approved quality system complying with ISO 9000 series or equivalent, pipes and fittings are to be tested in accordance with this Appendix to the satisfaction of the Classification Society's surveyors for every batch of pipes.

4.2.2 Each pipe and fitting is to be tested by the Manufacturer at a hydrostatic pressure not less than 1,5 times the nominal pressure. Alternatively, for pipes and fittings not employing hand lay up techniques, the hydrostatic pressure test may be carried out in accordance with the hydrostatic testing requirements stipulated in the recognised national or international standard to which the pipe or fittings are manufactured, provided that there is an effective quality system in place.

Depending upon the intended application, the Society may require the pressure testing of each pipe and/or fitting.

4.3 Testing after installation on board

4.3.1 Hydrostatic testing

a) Piping systems for essential systems are to be subjected to a test pressure of not less than 1,5 times the design pressure or 0,4 MPa, whichever is the greater.

b) Piping systems for non-essential services are to be checked for leakage under operational conditions.

The pressure rise in the pipe systems and the duration of the hydrostatic testing are to be in compliance with a recognised standard as defined in [1.4].

4.3.2 Earthing test

For piping required to be electrically conductive, earthing is to be checked and random resistance testing is to be performed.

4.4 Test specification for plastic pipes

4.4.1 Scope

This sub-article contains requirements for the type approval of plastic pipes. Unless otherwise specified, it is applicable to rigid pipes, pipe joints and fittings.

4.4.2 Documentation

The following information for the plastic pipes, fittings and joints is to be submitted for consideration and approval:

a) General information
- pipe and fitting dimensions
- maximum internal and external working pressure
- working temperature range
- intended services and installation locations
- the level of fire endurance
- electrically conductive
- intended fluids
- limits on flow rates
- serviceable life
- installation instructions
- details of marking.

b) Drawings and supporting documentation
- certificates and reports for relevant tests previously carried out
- details of relevant standards
- all relevant design drawings, catalogues, data sheets, calculations and functional descriptions
- fully detailed sectional assembly drawings showing pipe, fittings and pipe connections.

c) Materials
- resin type
- catalyst and accelerator types, and concentration employed in the case of reinforced polyester resin pipes or hardeners where epoxide resins are employed
- statement of all reinforcements employed where the reference number does not identify the mass per unit area or the tex number of a roving used in a filament winding process, these are to be detailed
- full information regarding the type of gel-coat or thermoplastic liner employed during construction, as appropriate
- cure/post-cure conditions. The cure and post-cure temperatures and times employ resin/reinforcement ratio
- winding angle and orientation.

4.4.3 Testing

Testing is to demonstrate compliance of the pipes, fittings and joints for which type approval is sought with the present Appendix.

Pipes, joints and fittings are to be tested for compliance with the requirements of recognized standards acceptable to the Society. In that order, recommended standards are given in Tab 2 and Tab 3.

Table 2 : Typical requirements for all systems

No.	Test	Typical standard	Notes
1	Internal pressure **(1)**	Requirement [2.2.3], item a) ASTM D 1599 ASTM D 2992 ISO 15493 or equivalent	Top, middle, bottom (of range) Tests are to be carried out on pipe spools made of different pipe sizes, fittings and pipe connections
2	External pressure **(1)**	Requirement [2.2.3], item b) ISO 15493 or equivalent	As above, for straight pipes only
3	Axial strength	Requirement [2.2.5]	As above
4	Load deformation	ASTM D 2412 or equivalent	Top, middle, bottom (of each pressure range)
5	Temperature limitations	ISO 75 method A GRP piping system: HDT test on each type of resin according to ISO 75 method A Thermoplastic piping systems: ISO 75 method A ISO 306 - Thermoplastic materials - Determination of Vicat softening temperature (VST) VICAT test according to ISO 2507 Polyesters with an HDT below 80°C should not be used	Each type of resin
6	Impact resistance	ISO 9854: 1994, ISO 9653: 1991, ISO 15493, ASTM D 2444, or equivalent	Representative samples of each type of construction
7	Ageing	Manufacturer's standard ISO 9142: 1990	Each type of construction
8	Fatigue	Manufacturer's standard or service experience	Each type of construction
9	Fluid absorption	ISO 8361: 1991	
10	Material compatibility **(2)**	ASTM C581 Manufacturer's standard	

(1) Test to be witnessed by a Surveyor of the Society.
(2) If applicable.

Table 3 : Typical additional requirements depending on service and/or locations of piping

No.	Test	Typical standard	Notes
1	Fire endurance **(1) (2) (3)**	IMO Res. A753(18), Appendix 1, 2	Representative samples of each type of construction and type of pipe connection
2	Flame spread **(1) (2) (3)**	Requirement [2.3.2]	Representative samples of each type of construction
3	Smoke generation **(2)**	IMO Fire Test Procedures Code	Representative samples of each type of construction
4	Toxicity **(2)**	IMO Fire Test Procedures Code	Representative samples of each type of construction
5	Electrical conductivity **(1) (2) (3)**	ASTM F1173-95 or ASTM D 257, NS 6126 § 11.2 or equivalent	Representative samples of each type of construction

(1) Test to be witnessed by a Surveyor of the Society.
(2) If applicable.
(3) Optional. However, if the test is carried out, the range of approved applications for the pipes is to be limited accordingly.

Appendix 2 Type Testing Procedure for Crankcase Explosion Relief Valves

1 General

1.1 Scope

1.1.1 This appendix specifies type tests and identifies standard test conditions using methane gas and air mixture to demonstrate the Society requirements are satisfied for crankcase explosion relief valves intended to be fitted to engines and gear cases.

1.1.2 This test procedure is only applicable to explosion relief valves fitted with flame arresters.

Note 1: Where internal oil wetting of a flame arrester is a design feature of an explosion relief valve, alternative testing arrangements that demonstrate compliance with this appendix may be proposed by the manufacturer. The alternative testing arrangements are to be agreed by the Society.

1.2 Recognised standards

1.2.1 The following standards are considered as recognised standards:

- ISO 16852:2016
- ISO/IEC 17025:2017
- ISO 12100:2010
- VDI 3673-1:2002
- IMO Circular MSC/Circ.677 as amended by IMO Circular MSC/Circ.1009 and IMO Circular MSC.1/Circ.1324.

1.3 Purpose

1.3.1 The purpose of type testing crankcase explosion relief valves is fourfold:

- to verify the effectiveness of the flame arrester
- to verify that the valve closes after an explosion
- to verify that the valve is gas/air tight after an explosion
- to establish the level of over pressure protection provided by the valve.

1.4 Approval

1.4.1 The approval of explosion relief valves is at the discretion of the Society based on the appraisal of plans and particulars and the test facility's report of the results of type testing.

2 Type testing procedure

2.1 Test facilities

2.1.1 Test houses carrying out type testing of crankcase explosion relief valves are to meet the following requirements:

a) The test houses where testing is carried out are to be accredited to a National or International Standard, e.g. ISO/IEC 17025:2017, and are to be acceptable to the Society.

b) The test facilities are to be equipped so that they can perform and record explosion testing in accordance with this procedure.

c) The test facilities are to have equipment for controlling and measuring a methane gas in air concentration within a test vessel to an accuracy of ± 0,1%.

d) The test facilities are to be capable of effective point-located ignition of a methane gas in air mixture.

e) The pressure measuring equipment is to be capable of measuring the pressure in the test vessel in at least two positions, one at the valve and the other at the test vessel centre. The measuring arrangements are to be capable of measuring and recording the pressure changes throughout an explosion test at a frequency recognising the speed of events during an explosion. The result of each test is to be documented by video recording and by recording with a heat sensitive camera.

f) The test vessel for explosion testing is to have documented dimensions. The dimensions are to be such that the vessel is not "pipe like" with the distance between dished ends being not more than 2,5 times its diameter. The internal volume of the test vessel is to include any standpipe arrangements.

g) The test vessel is to be provided with a flange, located centrally at one end perpendicular to the vessel longitudinal axis, for mounting the explosion relief valve.

The test vessel is to be arranged in an orientation consistent with how the valve will be installed in service, i.e., in the vertical plane or the horizontal plane.

h) A circular plate is to be provided for fitting between the pressure vessel flange and valve to be tested with the following dimensions:

1) outside diameter of 2 times the outer diameter of the valve top cover

2) internal bore having the same internal diameter as the valve to be tested.

i) The test vessel is to have connections for measuring the methane in air mixture at the top and bottom.

j) The test vessel is to be provided with a means of fitting an ignition source at a position specified in [2.2.3].

k) The test vessel volume is to be as far as practicable, related to the size and capability of the relief valve to be tested. In general, the volume is to correspond to the requirement in Ch 1, Sec 2, [2.3.4], d) for the free area of explosion relief valve to be not less than 115 cm^2/m^3 of crankcase gross volume.

Note 1: This means that the testing of a valve having 1150 cm^2 of free area, would require a test vessel with a volume of 10 m^3.

Note 2: Where the free area of relief valves is greater than 115 cm^2/m^3 of the crankcase gross volume, the volume of the test vessel is to be consistent with the design ratio.

Note 3: In no case is the volume of the test vessel to vary by more than ±15% from the design cm^2/m^3 volume ratio.

2.2 Explosion test process

2.2.1 All explosion tests to verify the functionality of crankcase explosion relief valves are to be carried out using an air and methane mixture with a volumetric methane concentration of 9,5% ±0,5%. The pressure in the test vessel is to be not less than atmospheric and is not to exceed the opening pressure of the relief valve.

2.2.2 The concentration of methane in the test vessel is to be measured at the top and bottom of the vessel and these concentrations are not to differ by more than 0,5%.

2.2.3 The ignition of the methane and air mixture is to be made at the centreline of the test vessel at a position approximately one third of the height or length of the test vessel opposite to where the valve is mounted.

2.2.4 The ignition is to be made using a maximum 100 J explosive charge.

2.3 Valves to be tested

2.3.1 The valves used for type testing (including testing specified in [2.3.3] are to be selected from the manufacturer's normal production line for such valves by the classification society witnessing the tests.

2.3.2 For approval of a specific valve size, three valves are to be tested in accordance with [2.3.3] and [2.4]. For a series of valves see [2.6].

2.3.3 The valves selected for type testing are to have been previously tested at the manufacturer's works to demonstrate that the opening pressure is in accordance with the specification within a tolerance of ± 20% and that the valve is air tight at a pressure below the opening pressure for at least 30 seconds.

Note 1: This test is to verify that the valve is air tight following assembly at the manufacturer's works and that the valve begins to open at the required pressure demonstrating that the correct spring has been fitted.

2.3.4 The type testing of valves is to recognise the orientation in which they are intended to be installed on the engine or gear case. Three valves of each size are to be tested for each intended installation orientation, i.e. in the vertical and/or horizontal positions.

2.4 Method

2.4.1 The following requirements are to be satisfied at explosion testing:

a) The explosion testing is to be witnessed by a classification society surveyor

b) Where valves are to be installed on an engine or gear case with shielding arrangements to deflect the emission of explosion combustion products, the valves are to be tested with the shielding arrangements fitted

c) Successive explosion testing to establish a valve's functionality is to be carried out as quickly as possible during stable weather conditions

d) The pressure rise and decay during all explosion testing is to be recorded

e) The external condition of the valves is to be monitored during each test for indication of any flame release by video and heat sensitive camera.

2.4.2 The explosion testing is to be in three stages for each valve that is required to be approved as being type tested.

a) Stage 1:

Two explosion tests are to be carried out in the test vessel with the circular plate described in [2.1.1], item h) fitted and the opening in the plate covered by a 0,05 mm thick polythene film

Note 1: These tests establish a reference pressure level for determination of the capability of a relief valve in terms of pressure rise in the test vessel, see [2.5.1], item f).

b) Stage 2:

1) Two explosion tests are to be carried out on three different valves of the same size. Each valve is to be mounted in the orientation for which approval is sought i.e., in the vertical or horizontal position with the circular plate described in [2.1.1], item h) located between the valve and pressure vessel mounting flange.

2) The first of the two tests on each valve is to be carried out with a 0,05mm thick polythene bag, having a minimum diameter of three times the diameter of the circular plate and volume not less than 30% of the test vessel, enclosing the valve and circular plate. Before carrying out the explosion test the polythene bag is to be empty of air. The polythene bag is required to provide a readily visible means of assessing whether there is flame transmission through the relief valve following an explosion consistent with the requirements of the standards identified in [1.2].

Note 2: During the test, the explosion pressure will open the valve and some unburned methane/air mixture will be collected in the polythene bag. When the flame reaches the flame arrester and if there is flame transmission through the flame arrester, the methane/air mixture in the bag will be ignited and this will be visible.

3) Provided that the first explosion test successfully demonstrated that there was no indication of combustion outside the flame arrester and there are no visible signs of damage to the flame arrester or valve, a second explosion test without the polythene bag arrangement is to be carried out as quickly as possible after the first test. During the second explosion test, the valve is to be visually monitored for any indication of combustion outside the flame arrester and video records are to be kept for subsequent analysis. The second test is required to demonstrate that the valve can still function in the event of a secondary crankcase explosion.

4) After each explosion, the test vessel is to be maintained in the closed condition for at least 10 seconds to enable the tightness of the valve to be ascertained. The tightness of the valve can be verified during the test from the pressure/time records or by a separate test after completing the second explosion test.

c) Stage 3:

Carry out two further explosion tests as described in Stage 1. These further tests are required to provide an average baseline value for assessment of pressure rise, recognising that the test vessel ambient conditions may have changed during the testing of the explosion relief valves in Stage 2.

2.5 Assessment and records

2.5.1 For the purposes of verifying compliance with the requirements of this Section, the assessment and records of the valves used for explosion testing is to address the following:

a) The valves to be tested are to have evidence of design appraisal/approval by the classification society witnessing tests.

b) The designation, dimensions and characteristics of the valves to be tested are to be recorded. This is to include the free area of the valve and of the flame arrester and the amount of valve lift at 0,2 bar.

c) The test vessel volume is to be determined and recorded.

d) For acceptance of the functioning of the flame arrester there is not to be any indication of flame or combustion outside the valve during an explosion test. This should be confirmed by the test laboratory taking into account measurements from the heat sensitive camera.

e) The pressure rise and decay during an explosion is to be recorded, with indication of the pressure variation showing the maximum overpressure and steady underpressure in the test vessel during testing. The pressure variation is to be recorded at two points in the pressure vessel.

f) The effect of an explosion relief valve in terms of pressure rise following an explosion is ascertained from maximum pressures recorded at the centre of the test vessel during the three stages. The pressure rise within the test vessel due to the installation of a relief valve is the difference between average pressure of the four explosions from Stages 1 and 3 and the average of the first tests on the three valves in Stage 2. The pressure rise is not to exceed the limit specified by the manufacturer.

g) The valve tightness is to be ascertained by verifying from the records at the time of testing that an underpressure of at least 0,3 bar is held by the test vessel for at least 10 seconds following an explosion. This test is to verify that the valve has effectively closed and is reasonably gas-tight following dynamic operation during an explosion.

h) After each explosion test in Stage 2, the external condition of the flame arrester is to be examined for signs of serious damage and/or deformation that may affect the operation of the valve.

i) After completing the explosion tests, the valves are to be dismantled and the condition of all components ascertained and documented. In particular, any indication of valve sticking or uneven opening that may affect operation of the valve is to be noted. Photographic records of the valve condition are to be taken and included in the report.

2.6 Design series qualification

2.6.1 The qualification of quenching devices to prevent the passage of flame can be evaluated for other similar devices of identical type where one device has been tested and found satisfactory.

2.6.2 The quenching ability of a flame arrester depends on the total mass of quenching lamellas/mesh. Provided the materials, thickness of materials, depth of lamellas/thickness of mesh layer and the quenching gaps are the same, then the same quenching ability can be qualified for different sizes of flame arresters satisfying:

$$\frac{n_1}{n_2} = \sqrt{\frac{S_1}{S_2}}$$

and

$$\frac{A_1}{A_2} = \frac{S_1}{S_2}$$

where:

n_1 : Total depth of flame arrester corresponding to the number of lamellas of size 1 quenching device for a valve with a relief area equal to S_1

n_2 : Total depth of flame arrester corresponding to the number of lamellas of size 2 quenching device for a valve with a relief area equal to S_2

A_1 : Free area of quenching device for a valve with a relief area equal to S_1

A_2 : Free area of quenching device for a valve with a relief area equal to S_2.

2.6.3 The qualification of explosion relief valves of larger sizes than that which has been previously satisfactorily tested in accordance with [2.4] and [2.5] can be evaluated where valves are of identical type and have identical features of construction subject to the following:

a) The free area of a larger valve does not exceed three times + 5% that of the valve that has been satisfactorily tested.

b) One valve of the largest size, see a), requiring qualification is subject to satisfactory testing required by [2.3.3] and [2.4.2], item b) except that a single valve will be accepted in [2.4.2], item b), 1) and the volume of the test vessel is not to be less than one third of the volume required by [2.1.1], item k).

c) The assessment and records are to be in accordance with [2.5] noting that [2.5.1], item f) will only be applicable to Stage 2 (see [2.4.2] for a single valve).

2.6.4 The qualification of explosion relief valves of smaller sizes than that which has been previously satisfactorily tested in accordance with [2.4] and [2.5] can be evaluated where valves are of identical type and have identical features of construction subject to the following:

a) The free area of a smaller valve is not less than one third of the valve that has been satisfactorily tested.

b) One valve of the smallest size, subject to item a), requiring qualification is subject to satisfactory testing required by [2.3.3] and [2.4.2], item b) except that a single valve will be accepted in [2.4.2], item b), 1) and the volume of the test vessel is not to be more than the volume required by [2.1.1], item k).

c) The assessment and records are to be in accordance with article [2.5] noting that [2.5.1], item f) will only be applicable to Stage 2 for a single valve.

2.7 Report

2.7.1 The test facility is to deliver a full report that includes the following information and documents:

- test specification
- details of test pressure vessel and valves tested
- the orientation in which the valve was tested (vertical or horizontal position)
- methane in air concentration for each test
- ignition source
- pressure curves for each test
- video recordings of each valve test
- the assessment and records stated in [2.5].

Appendix 3 Type Approval of Mechanical Joints

1 General

1.1 Scope

1.1.1 This specification describes the type testing condition for type approval of mechanical joints intended for use in marine piping systems. Conditions outlined in these requirements are to be fulfilled before Type Approval Certificates are issued.

1.1.2 The Society may accept alternative testing in accordance with national or international standards where applicable to the intended use and application.

1.1.3 This specification is applicable to mechanical joints defined in Ch 1, Sec 7, [2.5.5] including compression couplings and slip-on joints of different types for marine use.

1.2 Documentation

1.2.1 Following documents and information are to be submitted by Manufacturer for assessment and/or approval:

- product quality assurance system implemented
- complete description of the product
- typical sectional drawings with all dimensions necessary for evaluation of joint design
- complete specification of materials used for all components of the assembly
- proposed test procedure as required in Article [2] and corresponding test reports or other previous relevant tests
- initial information:
  - maximum design pressures (pressure and vacuum)
  - maximum and minimum design temperatures
  - conveyed media
  - intended services
  - maximum axial, lateral and angular deviation, allowed by manufacturer
  - installation details.

1.3 Materials

1.3.1 The materials used for mechanical joints are to comply with the requirements of Ch 1, Sec 7, [2.5.5].

The manufacturer has to submit evidence to substantiate that all components are adequately resistant to working the media at design pressure and temperature specified.

2 Testing, procedures and requirements

2.1 Aim of the tests

2.1.1 The aim of tests is to demonstrate ability of the pipe joints to operate satisfactory under intended service conditions. The scope and type of tests to be conducted e.g. applicable tests, sequence of testing, and the number of specimen, is subject to approval and will depend on joint design and its intended service in accordance with the requirements of Ch 1, Sec 7.

2.2 Test fluid

2.2.1 Unless otherwise specified, the water or oil as test fluid is to be used.

2.3 Test program

2.3.1 Testing requirements for mechanical joints are to be as indicated in Tab 1.

2.4 Selection of test specimen

2.4.1 Test specimens are to be selected from production line or at random from stock.

Where there are various sizes from type of joints requiring approval, minimum of three separate sizes representative of the range, from each type of joints are to be subject to the tests listed in Tab 1.

Table 1 : Tests for mechanical joints

Tests		Type of mechanical joint			Notes and references
		Compression couplings and pipes unions	Slip on joints		
			Grid type and machine grooved type	Slip type	
1	Tightness test	+	+	+	[2.7.1]
2	Vibration (fatigue) test	+	+	–	[2.7.2]
3	Pressure pulsation test**(1)**	+	+	–	[2.7.3]
4	Burst pressure test	+	+	+	[2.7.4]
5	Pull-out test	+	+	–	[2.7.5]
6	Fire endurance test	+	+	+	[2.7.6] if required by Ch 1, Sec 7, Tab 18
7	Vacuum test	+ **(2)**	+	+	[2.7.7] for suction line only
8	Repeated assembly test	+ **(3)**	+	–	[2.7.8]

\+ : Test is required
– : Test is not required.
(1) for use in those systems where pressure pulsation other than water hammer is expected.
(2) except joints with metal-to-metal tightening surfaces.
(3) except press type.

2.5 Mechanical joint assembly

2.5.1 Assembly of mechanical joints is to consist of components selected in accordance with [2.4.1] and the pipe sizes appropriate to the design of the joints.

2.5.2 Where pipe material would effect the performance of mechanical joints, the selection of joints for testing is to take the pipe material into consideration.

2.5.3 Where not specified, the length of pipes to be connected by means of the joint to be tested is to be at least five times the pipe diameter. Before assembling the joint, conformity of components to the design requirements is to be verified. In all cases the assembly of the joint is to be carried out only according to the manufacturer's instructions. No adjustment operations on the joint assembly, other than that specified by the manufacturer, are permitted during the test.

2.6 Test results acceptance criteria

2.6.1 Where a mechanical joint assembly does not pass all or any part of the tests in Tab 1, two assemblies of the same size and type that failed are to be tested and only those tests which mechanical joint assembly failed in the first instance, are to be repeated. In the event where one of the assemblies fails the second test, that size and type of assembly is to be considered unacceptable.

2.6.2 The methods and results of each test are to be recorded and reproduced as and when required.

2.7 Methods of tests

2.7.1 Tightness test

In order to ensure correct assembly and tightness of the joints, all mechanical joints are to be subjected to a tightness test, as follows:

a) Mechanical joint assembly test specimen is to be connected to the pipe or tubing in accordance with the requirements of [2.5] and the manufacturers instructions, filled with test fluid and de-aerated.

   Mechanical joints assemblies intended for use in rigid connections of pipe lengths, are not to be longitudinally restrained.

   Pressure inside the joint assembly is to be slowly increased to 1,5 times of design pressure. This test pressure is to be retained for a minimum period of 5 minutes.

   In the event where there is a drop in pressure or there is visual indication of leakage, the test (including fire test) is to be repeated for two test pieces.

   If during the repeat test one test piece fails, the testing is regarded as having failed.

   Other alternative tightness test procedure, such as pneumatic test, may be accepted.

b) For compression couplings a static gas pressure test is to be carried out to demonstrate the integrity of the mechanical joints assembly for tightness under the influence of gaseous media. The pressure is to be raised to maximum pressure or 70 bar whichever is less.

c) Where the tightness test is carried out using gaseous media as permitted in a) above, then the static pressure test mentioned in b) above need not be carried out.

2.7.2 Vibration (fatigue) test

In order to establish the capability of the mechanical joint assembly to withstand fatigue, which is likely to occur due to vibrations under service conditions, mechanical joints assembly is to be subject to the following vibration test.

Conclusions of the vibration tests should show no leakage or damage, which could subsequently lead to a failure.

a) Testing of compression couplings and pipe unions

Compression couplings, pipe unions or other similar joints intended for use in rigid connections of pipe are to be tested in accordance with this method described as follows. Rigid connections are joints, connecting pipe length without free angular or axial movement.

Two lengths of pipe are to be connected by means of the joint to be tested. One end of the pipe is to be rigidly fixed while the other end is to be fitted to the vibration rig. The test rig and the joint assembly specimen being tested are to be arranged as shown in Fig 1.

The joint assembly is to be filled with test fluid, de-aerated and pressurised to the design pressure of the joint.

Pressure during the test is to be monitored. In the event of drop in the pressure and visual signs of leakage the test is to be repeated as described in [2.6].

Visual examination of the joint assembly is to be carried out for signs of damage which may eventually lead to joint leakage.

Re-tightening may be accepted once during the first 1000 cycles.

Vibration amplitude is to be within 5% of the value calculated from the following formula:

$$A = \frac{2SL^2}{3ED}$$

where:

A : Single amplitude, in mm

L : Length of the pipe, in mm

S : Allowable bending stress, in N/mm^2, based on 0,25 of the yield stress

E : Modulus of elasticity of tube material (for mild steel, E = 210 kN/mm^2)

D : Outside diameter of tube, in mm.

Test specimen is to withstand not less than 10^7 cycles with frequency 20 - 50 Hz without leakage or damage.

Figure 1 : Testing of compression couplings and pipe unions

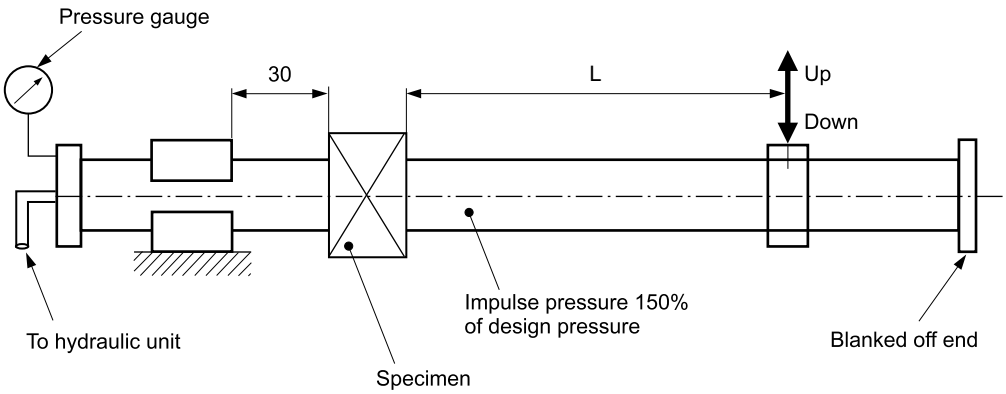

b) Grip type and machine grooved type joints

Grip type joints and other similar joints containing elastic elements are to be tested in accordance with the following method.

A test rig of cantilever type used for testing fatigue strength of components may be used. The test specimen being tested is to be arranged in the test rig as shown in Fig 2.

Two lengths of pipes are to be connected by means of joint assembly specimen to be tested. One end of the pipe is to be rigidly fixed while the other end is to be fitted to the vibrating element on the rig. The length of pipe connected to the fixed end should be kept as short as possible and in no case exceed 200 mm.

Mechanical joint assemblies are not to be longitudinally restrained.

The assembly is to be filled with test fluid, de-aerated and pressurized to the design pressure of the joint. Preliminary angle of deflection of pipe axis is to be equal to the maximum angle of deflection, recommended by the manufacturer. The amplitude is to be measured at 1m distance from the centre line of the joint assembly at free pipe end connected to the rotating element of the rig (see Fig 2).

Parameters of testing are to be as indicated as per Tab 2 and to be carried out on the same assembly.

Pressure during the test is to be monitored. In the event of a drop in the pressure and visual signs of leakage the test is to be repeated as described in [2.6]. Visual examination of the joint assembly is to be carried out for signs of damage which may eventually cause leakage.

Figure 2 : Grip type and machine grooved type joints

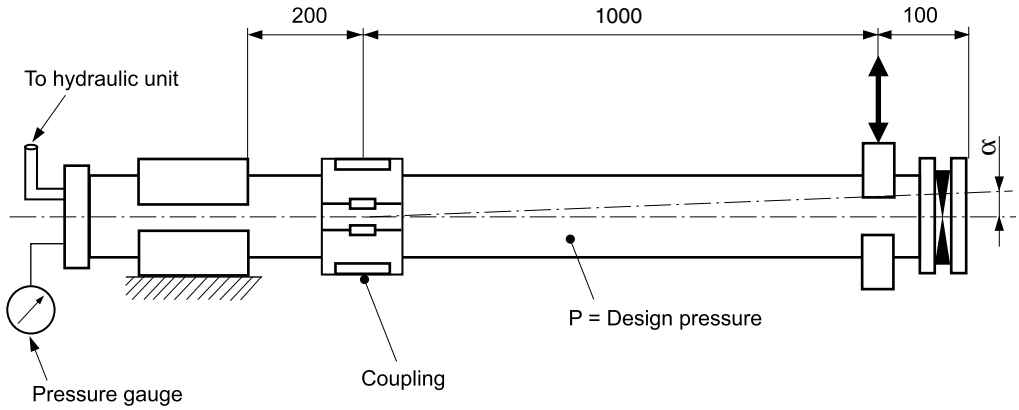

Table 2 : Parameters of testing

Number of cycles	Amplitude (mm)	Frequency (Hz)
$3 \cdot 10^6$	± 0,06	100
$3 \cdot 10^6$	± 0,50	45
$3 \cdot 10^6$	± 1,50	10

2.7.3 Pressure pulsation test

In order to determine capability of mechanical joint assembly to withstand pressure pulsation likely to occur during working conditions, joint assemblies intended for use in rigid connections of pipe lengths, are to be tested in accordance with the following method.

The mechanical joint test specimen for carrying out this test may be the same as that used in the test in [2.7.1], item a), provided it passed that test.

The vibration test in [2.7.2] and the pressure pulsation test are to be carried out simultaneously for compression couplings and pipe unions.

The mechanical joint test specimen is to be connected to a pressure source capable of generating pressure pulses of magnitude as shown in Fig 3.

Impulse pressure is to be raised from 0 to 1,5 times the design pressure of the joint with a frequency equal to 30-100 cycles per minute. The number of cycles is not to be less than 5×10^5.

The mechanical joint is to be examined visually for sign of leakage or damage during the test.

Figure 3 : Impulse pressure diagram

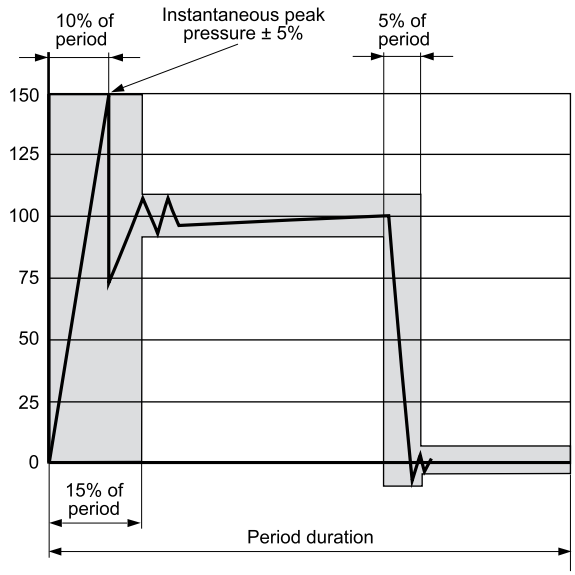

2.7.4 Burst pressure test

In order to determine the capability of the mechanical joint assembly to withstand a pressure as stated by Ch 1, Sec 7, [2.5.5], item e), the following burst test is to be carried out.

Mechanical joint test specimen is to be connected to the pipe or tubing in accordance with the requirements of [2.5], filled with test fluid, de-aerated and pressurized to test pressure with an increasing rate of 10% per minute of test pressure. The mechanical joint assembly intended for use in rigid connections of pipe lengths is not to be longitudinally restrained.

Duration of this test is not to be less than 5 minutes at the maximum pressure. This pressure value will be annotated.

Where consider convenient, the mechanical joint test specimen used in tightness test in [2.7.1], same specimen may be used for the burst test provided it passed the tightness test.

The specimen may have small deformation whilst under test pressure, but no leakage or visible cracks are permitted.

2.7.5 Pull-out test

In order to determine ability of a mechanical joint assembly to withstand axial load likely to be encountered in service without the connecting pipe from becoming detached, following pullout test is to be carried out.

Pipe length of suitable size is to be fitted to each end of the mechanical joints assembly test specimen. The test specimen is to be pressurized to design pressure such that the axial loads imposed are of a value calculated by the following formula:

$$L = \frac{\pi}{4} D^2 p$$

where:

D : Pipe outside diameter, in mm

p : Design pressure, in N/mm^2

L : Applied axial load, in N.

This axial load is to be maintained for a period of 5 minutes.

During the test, pressure is to be monitored and relative movement between the joint assembly and the pipe measured.

The mechanical joint assembly is to be visually examined for drop in pressure and signs of leakage or damage.

There are to be no movement between mechanical joint assembly and the connecting pipes.

2.7.6 Fire endurance test

In order to establish capability of the mechanical joints to withstand effects of fire which may be encountered in service, mechanical joints are to be subjected to a fire endurance test. The fire endurance test is to be conducted on the selected test specimens as per the following standards:

- ISO 19921: 2005(E): Ships and marine technology – Fire resistance of metallic pipe components with resilient and elastomeric seals – Test methods.
- ISO 19922: 2005(E): Ships and marine technology – Fire resistance of metallic pipe components with resilient and elastomeric seals – Requirements imposed on the test bench.

Clarifications to the standard requirements:

a) If the fire test is conducted with circulating water at a pressure different from the design pressure of the joint (however of at least 5 bar) the subsequent pressure test is to be carried out to twice the design pressure.

b) A selection of representative nominal bores may be tested in order to evaluate the fire resistance of a series or range of mechanical joints of the same design. When a mechanical joint of a given nominal bore (D_n) is so tested then other mechanical joints falling in the range D_n to $2 \cdot D_n$ (both inclusive) are considered accepted.

2.7.7 Vacuum test

In order to establish capability of mechanical joint assembly to withstand internal pressures below atmosphere, similar to the conditions likely to be encountered under service conditions, following vacuum test is to be carried out.

Mechanical joint assembly is to be connected to a vacuum pump and subjected to a pressure 170 mbar absolute. Once this pressure is stabilized the mechanical joint assembly test specimen under test are to be isolated from the vacuum pump and this pressure is to be retained for a period of 5 minutes.

Pressure is to be monitored during the test.

No internal pressure rise is permitted.

2.7.8 Repeated assembly test

Mechanical joint test specimen are to be dismantled and reassembled 10 times in accordance with manufacturers instructions and then subjected to a tightness test as defined in [2.7.1].

Appendix 4 Dual Fuel Engines supplied with Low Pressure Gas and Dual Fuel Gas Turbines

1 General

1.1 Scope

1.1.1 This Appendix covers the specific features of Dual Fuel (DF) diesel engines and Dual Fuel (DF) gas turbines.

The requirements of:

- Ch 1, Sec 2, for diesel engines
- Ch 1, Sec 5 for gas turbines

are also to be complied with.

1.1.2 This Appendix applies to 4-stroke dual fuel engines supplied with gas at a pressure not exceeding 10 bar. The acceptance of 2-stroke dual fuel engines may be considered on a case by case basis.

1.2 Design principles

1.2.1 DF diesel engines and DF gas turbines are to be type-approved by the Society. The type tests are to be carried out according to an approved program.

1.2.2 DF diesel engines and DF gas turbines are to be designed so as to operate safely with any gas composition within the ship specification range, taking into account the possible variations of the gas composition during the voyage. Tests are to be carried out to demonstrate their ability in this respect.

1.2.3 Arrangements are to be made to ensure that under no circumstances introduction of liquid gas in the DF diesel engine or DF gas turbine may occur.

1.2.4 The fuel supply is to be capable of being switched over from gas fuel to oil fuel while the engine or turbine is running, without significant fluctuation of the engine or turbine output nor of the rotational speed.

1.2.5 Prior to a normal stop, the engine or turbine is to be switched over from gas fuel to oil fuel.

1.2.6 After each gas operation of the engine or turbine not followed by an oil fuel operation, the engine or turbine including the exhaust system is to be purged during a sufficient time in order to discharge the gas which may be present.

1.2.7 DF engines and DF gas turbines are to be fitted with a control system allowing a steady running with stable combustion, with any kind of gas as mentioned in [1.2.2] above, throughout the operating speed range of the engine or turbine. Automatic switch over to oil fuel may however be accepted at low loads.

1.2.8 Gas fuel and oil fuel supply systems pertaining to DF engines and DF gas turbines are to be so designed and controlled as to avoid any excessive gas delivery to the engine or gas turbine, which may result in the engine overspeed, in particular while the engine or gas turbine is running with gas fuel and oil fuel at the same time.

2 Additional requirements for dual fuel engines

2.1 Air inlet manifolds

2.1.1 Air inlet manifolds are to be provided with relief valves or other approved devices, the size, number and distribution of which are to be justified.

Note 1: The relief valves or equivalent devices may be omitted in the following cases, subject to satisfactory justifications:

- the strength of the air inlet manifold is sufficient to withstand the pressure build-up due to the worst-case explosion, or
- the maximum gas concentration expected in the air inlet manifold in case of malfunction of a gas admission valve, leakage of an air inlet valve, etc. cannot reach dangerous levels.

2.1.2 Where provided, explosion relief valves or equivalent devices are to be so arranged and located as to minimize the consequences of a flame emission.

2.1.3 Any electric equipment located in the inlet air manifold is to be of the intrinsically safe type.

2.2 Gas supply to the cylinders

2.2.1 Gas is normally to be introduced directly in or as close as possible to the cylinders heads.

2.2.2 Gas may also be introduced in the air manifold provided that:

- the gas concentration of the gas/air mixture in the air manifold may under no circumstances exceed 60% of the lower flammable limit. A gas detector is to be provided for that purpose
- gas may not pass from the air manifold to the exhaust system
- excessive gas supply to the engine likely to result in overspeed is precluded.

Note 1: The following failures are to be considered in the risk analysis:

- malfunction of the gas admission valve
- leaking cylinder inlet/exhaust valves.

2.2.3 The gas manifold is to be fitted with a flame arrester at the engine inlet, unless it is demonstrated that the gas supply system is so designed as to prevent the passage of flame into the gas piping.

2.3 Gas Ignition in the cylinders

2.3.1 In order to initiate the gas combustion, each cylinder is to be fitted with a pilot injection system supplied with liquid fuel and continuously operated. Other systems, such as spark ignition, will be subject to a special examination.

2.4 Exhaust manifold

2.4.1 Exhaust manifolds are to be of reinforced construction and provided with safety valves or other approved devices, the size, number and distribution of which are to be justified.

Note 1: Where the strength of the exhaust manifold is sufficient to withstand the pressure build-up due to the worst-case explosion, the relief valves or equivalent devices may be omitted.

2.4.2 In the case where an analysis showing that the gas concentration within the exhaust manifold cannot reach dangerous levels is submitted to the Society, the provisions of [2.4.1] may be waived. This analysis is to cover at least the malfunction of a cylinder (misfiring) and an exhaust valve leakage.

2.5 Crankcase

2.5.1 The crankcase is to be equipped with a sensor to detect an overpressure due to a piston ring failure (blow-by).

2.5.2 Owing to the continuous presence of gas in the crankcase due to the operating principle of the engine (compression of a gas/air mixture), a temperature monitoring system approved by the Society is to be provided for each part of the engine subjected to friction in order to detect any abnormal temperature rise likely to result in the gas ignition.

The temperature monitoring system is to be provided in particular for the cylinder liners, main bearings and connecting rod big end bearings. In case of abnormal temperature rise, this system is to activate the immediate shut-down of the engine.

The temperature sensors and other components of the temperature monitoring system located within the crankcase are to be of the safe type, suitable for use in explosive atmosphere.

Note 1: Arrangements other than direct temperature measurements, such as:

- hot spot detection systems based on other principles, or
- justifications submitted by the engine manufacturer and showing that the engine components subjected to friction are under no circumstances likely to be brought to dangerous temperatures which may result in crankcase gas ignition

may be taken into consideration if, in the opinion of the Society, they present an equivalent safety level. Oil mist detection systems, which are required to be fitted on ships having an automation notation, will normally not be accepted for this purpose.

2.5.3 Crankcase vent lines are to be fitted with a sampling line allowing the measurement of the gas concentration in the crankcase by means of a portable measuring device.

2.5.4 Arrangements are to be made to allow the inerting of the crankcase before servicing of the engine.

2.6 Instrumentation and safeties

2.6.1 The engine control system as well as the related systems are to be of a type approved by the Society.

2.6.2 The alarm and safety systems are to be provided in accordance with Tab 1.

2.6.3 Gas admission valves are to be fitted with a device allowing the immediate detection of a malfunction (such as locking in open position).

2.6.4 The combustion in each cylinder is to be monitored for the detection of possible misfiring or knocking.

Note 1: When the gas is introduced in the air inlet manifold in accordance with [2.2.2], only one cylinder needs to be monitored for knocking detection.

Table 1 : Dual fuel diesel engine alarm and safety systems

Parameter	Alarms	Automatic safety actions			
		Activation of the block-and-bleed valves	Activation of the master gas valve	Switch over to oil fuel mode	Engine shut down
Gas supply - pressure	L+H	X		X	
Gas supply - temperature	L+H	X		X	
Gas admission valve(s) - failure	X	X		X	
Pilot injection system - failure	X	X		X	
Air inlet manifold - gas concentration reaching 60% LFL **(1)**	H	X		X	
Exhaust gas at each cylinder outlet - temperature	H	X		X	
Exhaust gas at each cylinder outlet - temperature deviation from average	H	X		X	
Combustion in each cylinder - misfiring	X	X		X	
Combustion in each cylinder - knocking	X	X		X	
Crankcase - pressure	H	X			X
Crankcase - temperature **(2)**	H	X			X
Crankcase - oil mist concentration	H	X			X
Engine stop from any cause	X	X			

(1) Required only when gas is introduced directly in the gas manifold in accordance with [2.2.2].
(2) High temperature of cylinder liners or bearings. See [2.5.2].
Note 1: Symbol convention: H = High, L = Low, X = function is required

3 Additional requirements for dual fuel gas turbines

3.1 General

3.1.1 The turbine and associated gas treatment and gas supply systems as well as their control system are to be so designed and arranged as to allow the proper operation of the turbine taking into account the expected variations of the gas characteristics, in particular:

- Lower heating value
- Specific gravity
- Gas temperature
- Ambient temperature.

3.2 Protection against liquid presence in the gas supply

3.2.1 Arrangements are to be made to avoid the condensation of heavy hydrocarbons or water in the turbine gas inlet system. Where this is achieved by heating the gas fuel, a superheat of at least 28°C above the dew point is to be observed to ensure that no liquid may appear in the gas system downstream of the heater.

3.2.2 Where necessary, the gas piping system is to be heat traced to avoid any condensation, in particular during the turbine start-up.

3.3 Instrumentation and safeties

3.3.1 The turbine control system as well as the related systems are to be of a type approved by the Society.

3.3.2 The alarm and safety systems are to be provided in accordance with Tab 2.

Table 2 : Dual fuel gas turbine alarm and safety systems

Parameter	Alarms	Automatic safety actions			
		Activation of the block-and-bleed valves	Activation of the master gas valve	Switch over to oil fuel mode	Engine shut down
Gas supply - abnormal pressure	L+H	X		X	
Gas supply - abnormal temperature	L+H	X		X	
Gas admission valve - failure	X	X		X	
Turbine stop from any cause	X	X			

Note 1: Symbol convention: H = High, L = Low, X = function is required

CHAPTER 2
ELECTRICAL INSTALLATIONS

Section 1 General

1 Application

1.1 General

1.1.1 The requirements of this Chapter apply to electrical installations on all units, except express notifications, where indicated. In particular, they apply to the components of electrical installations for:

- essential services to be maintained under various emergency conditions
- safety of crew, contractors, visitors and unit
- essential services for special purposes connected with units specifically intended for such purposes (e.g. propulsion on mobile units, ballast system on semi-submersible units...)
- services for habitability
- SOLAS requirements, as far as practicable.

The other parts of the installation are to be so designed as not to introduce any risks or malfunctions to the above services.

1.2 Propelled units

1.2.1 For propelled units, reference is to be made to the Ship Rules, for the installation related to propulsion plant and steering, where the requirements of these installations, and corresponding essential services, are applicable. This includes power plant, machinery and the associated additional notations, where required.

1.3 References to other regulations and standards

1.3.1 The Society may refer to other regulations and standards when deemed necessary. These include the IEC publications, notably the IEC 60092 series “Electrical installations of ships and of mobile and fixed offshore units” and IEC61892 series “Mobile and fixed offshore units - electrical installations”.

1.3.2 When referred to by the Society, publications by the International Electrotechnical Commission (IEC) or other internationally recognised standards defined in this chapter, are in principle those currently in force at the date of the contract for construction.

Note 1: The use of previous versions of these standards will be considered on the case by case basis.

2 National Authorities requirements

2.1 International Regulations

2.1.1 Attention is directed to the International Regulations the electrical systems of the unit or installation may have to comply with such as:

- IMO Code for the Construction and Equipment of Mobile Offshore Drilling Units (MODU code), in particular for drilling units.
- International Convention for the Safety of Life at Sea (SOLAS), in particular for self-propelled units.

2.2 National Authorities requirements

2.2.1 Attention is drawn to special legal provisions enacted by National Authorities which units or installations may have to comply with according to their flag, type, size, operational site and intended service, as well as other particulars and details.

2.3 Statutory requirements

2.3.1 Compliance with statutory requirements mentioned in [2.1] and [2.2] is not included in the classification scope but, in case of conflict between the Rules and these requirements, the latter ones are to take precedence over the requirements of the present Rules, as stated in the Ship Rules.

3 Documentation to be submitted

3.1

3.1.1 The documents listed in Tab 1 are to be submitted.

Table 1 : Documents to be submitted

No.	I/A **(1)**	Documents to be submitted
1	A	General arrangement of electrical installation
2	A	Single line diagram of main and emergency power and lighting systems
3	A	Electrical generation system philosophy
4	I	Electrical power balance (main and emergency supply)
5	A	Calculation of short-circuit currents for each installation in which the sum of rated power of the energy sources which may be connected contemporaneously to the network is greater than 500 kVA (kW)
6	A	List of circuits including, for each supply and distribution circuit, data concerning the nominal current, the cable type, length and cross-section, nominal and setting values of the protective and control devices
7	A	Single line diagram and detailed diagram of the main switchboard
8	A	Single line diagram and detailed diagram of the emergency switchboard
9	A	Diagram of the most important section boards and motor control centres (above 100 kW)
10	A	Diagram of the supply for monitoring and control systems of generator prime movers
11	A	Diagram of the general emergency alarm system, of the public address system and other intercommunication systems
12	A	Detailed diagram of the navigation-light switchboard (where required)
13	A	Diagram of the remote stop system (ventilation, fuel pump, fuel valves, etc.)
14	A	List of batteries including type and manufacturer, voltage and capacity, location and equipment and/or system(s) served (when used for essential and emergency services)
15	A	General arrangement of electrical equipment with regards to hazardous areas
16	A	Justification of safety character of electrical equipment located in hazardous areas
17	I	Principal cable routing diagram
18	A	Selectivity and coordination of electrical protections (for high voltage installations)
19	A	Diagram of jackup control system (for self-elevating units)
20	A	Diagram of ballast control system (for column stabilized units)
(1) A = To be submitted for approval ; I = To be submitted for information		

4 Definitions

4.1 General

4.1.1 Unless otherwise stated, the terms used in this Chapter have the definitions laid down by the IEC standards.

The definitions given in the following requirements also apply.

4.2 Essential services

4.2.1 Essential services are defined in Pt A, Ch 1, Sec 1, [1.2.1].

Examples of equipment for essential services are given in Tab 2. This list is not exhaustive and other services may be defined by the party applying for classification.

4.2.2 Complementary primary and secondary essential services specific for propelled units are defined in Pt C, Ch 2, Sec 1 of the Ship Rules.

4.3 Services for habitability

4.3.1 Services for habitability are those intended for minimum comfort conditions for people on board.

Some examples of equipment for maintaining conditions of habitability are listed in Tab 3.

Table 2 : Essential services

Item	Description of service
1	Electric generators and associated power sources
2	Auxiliary services supplying the above equipment (fuel oil supply pumps, lubricating oil pumps and cooling water pumps...)
3	Sea water pumps
4	Forced draught fans, feed water pumps, water circulating pumps, condensate pumps, oil burning installations, for auxiliary boilers on units where steam is used for equipment supplying primary essential services
5	Control, monitoring and safety devices/systems for primary essential services
6	Starting equipment of diesel engines and gas turbines
7	The main lighting system for those parts of the unit normally accessible to and used by personnel
8	Ventilation of hazardous areas and those areas maintained at an overpressure to exclude the ingress of dangerous gases
9	Fuel oil transfer pumps and fuel oil treatment equipment
10	Lubrication oil transfer pumps and lubrication oil treatment equipment
11	Preheaters and viscosity control equipment for heavy fuel oil
12	Bilge, ballast and heeling pump
13	Fire pumps and other fire-extinguishing medium pumps
14	Ventilation fans for engine and boiler rooms
15	Navigation lights, aids and sound signals
16	Internal safety communication equipment
17	Fire and gas detection and alarm systems as required in Part C, Chapter 4
18	Electrical equipment for watertight closing appliances
19	Control, monitoring and safety devices/systems for equipment for secondary essential services
20	Emergency shutdown systems having an impact on essential services
21	Cooling system of environmentally controlled spaces
22	Blow out preventer **(1)**
23	Services considered as necessary to maintain dangerous cargo in a safe condition (e.g. inert gas plant) **(4)**
24	Jacking systems **(2)**
25	Ballast control system **(3)**
26	Crude oil offloading pumps **(4)**
27	Mooring system **(5)**

(1) Drilling units and also units granted with notation **HIPS**.
(2) Self-elevating units.
(3) Column stabilized units.
(4) Storage and offloading units.
(5) Units granted with **POSA** notation.

Table 3 : Services for maintaining habitability conditions

Item	Description of service
1	Cooking
2	Heating
3	Domestic refrigeration
4	Mechanical ventilation
5	Sanitary and fresh water
6	Electric generators and associated power sources supplying the above equipment

4.4 Emergency services

4.4.1 The emergency services are the services essential for safety which need to be operable during emergencies. The services listed in Tab 4 are to be considered as emergency ones.

Table 4 : Emergency services

Item	Description of emergency services
1	Emergency lighting
2	Indoor and outdoor communication systems required in emergency conditions
3	Signalling lights and sound signals required for the marking of offshore structures, including helicopter perimeter lights
4	Navigation lights and sound signals
5	Fire and gas detection and alarm systems required in Part C, Chapter 4
6	Fire fighting systems
7	Diving equipment
8	All power-operated watertight doors systems
9	General alarm and public address system
10	Emergency shutdown systems having an impact on emergency services
11	Ventilation of hazardous areas and those areas maintained at an overpressure to exclude the ingress of dangerous gases
12	Equipment, operating on electric power, at life-saving stations serving platform disembarkation
13	Ballast system and assorted control system **(1)**
14	Blow-out preventer and well disconnection systems, if any **(2)**
(1) Column stabilized units. **(2)** Drilling units.	

4.5 Safety voltage

4.5.1 A voltage which does not exceed 50 V a.c. r.m.s. between conductors, or between any conductor and earth, in a circuit isolated from the supply by means such as a safety isolating transformer.

4.5.2 A voltage which does not exceed 50 V d.c. between conductors or between any conductor and earth in a circuit isolated from higher voltage circuits.

4.6 Low-voltage systems

4.6.1 Alternating current systems with rated voltages greater than 50 V r.m.s. up to 1000 V r.m.s. inclusive and direct current systems with a maximum instantaneous value of the voltage under rated operating conditions greater than 50 V up to 1500 V inclusive.

4.7 High-voltage systems

4.7.1 Alternating current systems with rated voltages greater than 1000 V r.m.s. and direct current systems with a maximum instantaneous value of the voltage under rated operating conditions greater than 1500 V, up to 35000 V included.

4.8 Basic insulation

4.8.1 Insulation applied to live parts to provide basic protection against electric shock.

Note 1: Basic insulation does not necessarily include insulation used exclusively for functional purposes.

4.9 Supplementary insulation

4.9.1 Independent insulation applied in addition to basic insulation in order to provide protection against electric shock in the event of a failure of basic insulation.

4.10 Double insulation

4.10.1 Insulation comprising both basic insulation and supplementary insulation.

4.11 Reinforced insulation

4.11.1 A single insulation system applied to live parts, which provides a degree of protection against electric shock equivalent to double insulation.

Note 1: The term “insulation system” does not imply that the insulation must be one homogeneous piece. It may comprise several layers which cannot be tested singly as supplementary or basic insulation.

4.12 Earthing

4.12.1 The earth connection to the general mass of the hull of the ship in such a manner as will ensure at all times an immediate discharge of electrical energy without danger.

4.13 Normal operational and habitable condition

4.13.1 *A condition under which the unit as a whole, its machinery, services, means and aids ensuring safe navigation when under way, safety when in the industrial mode, fire and flooding safety, internal and external communications and signals, means of escape and winches for rescue boats, as well as the means of ensuring the minimum comfortable conditions of habitability, are in working order and functioning normally, and drilling operations.*

4.14 Emergency condition

4.14.1 *A condition under which any services needed for normal operational and habitable conditions are not in working order due to failure of the main source of electrical power.*

4.15 Main source of electrical power

4.15.1 *A source intended to supply electrical power to the main switchboard for distribution to all services necessary for maintaining the unit in normal operational and habitable condition.*

4.16 Black start condition

4.16.1 The condition under which the services essential to maintain the habitability and the safety of the unit are not in operation due to the absence of power.

Note 1: Black start condition is the condition under which entire machinery installation, including the main power supply, is not in operation and auxiliary means for bringing the main power supply and the essential services into operation, such as compressed air and starting current from batteries, are not available, but assuming that means are available to start the emergency generator at all times.

4.17 Main generating station

4.17.1 *The space in which the main source of electrical power is situated.*

4.18 Main switchboard

4.18.1 *A switchboard which is directly supplied by the main source of electrical power and is intended to distribute electrical energy to the unit's services.*

4.19 Emergency switchboard

4.19.1 *A switchboard which, in the event of failure of the main system of electrical power supply is directly supplied by the emergency source of electrical power and/or the transitional source of emergency power and is intended to distribute electrical energy to the emergency services.*

4.20 Emergency source of electrical power

4.20.1 *A source of electrical power, intended to supply the necessary services in the event of failure of the supply from the main source of electrical power.*

4.21 Section boards

4.21.1 A switchgear and controlgear assembly which is supplied by another assembly and arranged for the distribution of electrical energy to other section boards or distribution boards.

4.22 Distribution board

4.22.1 A switchgear and controlgear assembly arranged for the distribution of electrical energy to final sub-circuits.

4.23 Final sub-circuit

4.23.1 That portion of a wiring system extending beyond the final required overcurrent protective device of a board.

4.24 Hazardous areas

4.24.1 Areas in which an explosive atmosphere is present, or may be expected to be present due to the presence of vapours, gases, flammable dusts or explosives in quantities such as to require special precautions for the construction, installation and use of electrical apparatus.

Note 1: An explosive gas atmosphere is a mixture with air, under atmospheric conditions, of flammable substances in the form of gas, vapour or mist, in which, after ignition, combustion spreads throughout the unconsumed mixture.

4.24.2 Hazardous areas definitions and considerations for electrical equipment and installations are defined in Ch 2, Sec 15.

4.25 High fire risk areas

4.25.1 The high fire risk areas are defined as follows:

a) machinery spaces as defined in Ch 4, Sec 1, [3.2.1]

b) spaces containing fuel treatment equipment and other highly inflammable substances

c) galleys and pantries containing cooking appliances

d) laundry with drying equipment

e) enclosed or semi-enclosed hazardous spaces, in which certified safe type electric equipment is required.

4.26 Certified safe-type equipment

4.26.1 Certified safe-type equipment is electrical equipment of a type for which a national or other appropriate authority has carried out the type verifications and tests necessary to certify the safety of the equipment with regard to explosion hazard when used in an explosive gas atmosphere.

4.27 Voltage and frequency transient

4.27.1 Voltage transient

Sudden change in voltage (excluding spikes) which goes outside the nominal voltage tolerance limits and returns to and remains inside these limits within a specified recovery time after the initiation of the disturbance (time range: seconds).

4.27.2 Frequency transient

Sudden change in frequency which goes outside the frequency tolerance limits and returns to and remains inside these limits within a specified recovery time after initiation of the disturbance (time range: seconds).

4.28 Environmental categories

4.28.1 Electrical equipment is classified into environmental categories according to the temperature range, vibration levels, and resistance to chemically active substances and to humidity and to EMC required for installation in bridge and deck zone.

The designation of the environmental categories is indicated by the EC Code in Tab 5.

The first characteristic numeral indicates the temperature range in which the electrical equipment operates satisfactorily, as specified in Tab 6.

The second characteristic numeral indicates the vibration level in which the electrical equipment operates satisfactorily, as specified in Tab 7.

4.28.2 The tests for verifying the additional and supplementary letters and the characteristic numeral of the environmental categories are defined in Ch 3, Sec 6.

Table 5 : EC Code

Code letter	First characteristic numeral	Second characteristic numeral	Additional letter
EC	(numerals 1 to 4)	(numerals 1 to 3)	S **(1)** C **(2)** B **(3)**

(1) The additional letter S indicates the resistance to salt mist (exposed decks, masts) of the electrical equipment.

(2) The additional letter C indicates the relative humidity up to 80% (air conditioned areas) in which the electrical equipment operates satisfactorily.

(3) The additional letter B indicates the compliance for installing on the bridge and deck zone or in the vicinity of the bridge, with regards to EMC requirements specified in IEC 60533.

Table 6 : First characteristic numeral

First characteristic numeral	Brief description of location	Temperature range °C	
1	Air conditioned areas	+ 5	+ 40
2	Enclosed spaces	+ 5	+ 45
3	Inside consoles or close to combustion engines and similar	+ 5	+ 55
4	Exposed decks, masts	– 25	+ 45

Table 7 : Second characteristic numeral

Second characteristic numeral	Brief description of location	Frequency range, in Hz	Displacement amplitude, in mm	Acceleration amplitude, in g
1	Machinery spaces, command and control stations, accommodation spaces, exposed decks, cargo spaces	from 2,0 to 13,2	1,0	–
		from 13,2 to 100	–	0,7
2	Masts	from 2,0 to 13,2	3,0	–
		from 13,2 to 50	–	2,1
3	On air compressors, on diesel engines and similar	from 2,0 to 25,0	1,6	–
		from 25,0 to 100	–	4,0

Section 2 General Design Requirements

1 Environmental conditions

1.1 General

1.1.1 The electrical components of installations are to be designed and constructed to operate satisfactorily under the environmental conditions on board.

In particular, the conditions shown in the tables in this Article are to be taken into account.

Note 1: The environmental conditions are characterised by:

- one set of variables including climatic conditions (e.g. ambient air temperature and humidity), conditions dependent upon chemically active substances (e.g. salt mist) or mechanically active substances (e.g. dust or oil), mechanical conditions (e.g. vibrations or inclinations) and conditions dependent upon electromagnetic noise and interference, and
- another set of variables dependent mainly upon location on units, operational patterns and transient conditions.

1.2 Ambient air temperatures

1.2.1 The ambient air temperature ranges shown in Tab 1 are applicable in relation to the various locations of installation.

1.2.2 For units classed for service in specific zones, the Society may accept different ranges for the ambient air temperature (e.g. for units operating outside the tropical belt, the maximum ambient air temperature may be assumed as equal to +40°C instead of +45°C).

Table 1 : Ambient air temperature

Location	Temperature range (°C)	
Enclosed spaces	+5	+45
Inside consoles or fitted on combustion engines and similar	+5	+55
Air conditioned areas **(1)**	+5	+35 to +45
Exposed decks	–25	+45
(1) For environmentally controlled spaces, refer to Ch 2, Sec 12, [1.4]		

1.3 Humidity

1.3.1 The humidity ranges shown in Tab 2 are applicable in relation to the various locations of installation.

Table 2 : Humidity

Location	Humidity
General	95% up to 45°C 70% above 45°C
Air conditioned areas	Different values may be considered on a case by case basis

1.4 Sea water temperatures

1.4.1 The temperatures shown in Tab 3 are applicable to units classed for unrestricted service.

Table 3 : Water temperature

Coolant	Temperature range (°C)	
Sea water	0	+32

1.4.2 For units classed for service in specific zones, the Society may accept different values for the sea water temperature (e.g. for units operating outside the tropical belt, the maximum sea water temperature may be assumed as equal to +25°C instead of +32°C).

1.5 Salt mist

1.5.1 The applicable salt mist content in the air is to be 1mg/m³.

1.6 Cold climate precautions

1.6.1 For units operating in cold climate areas, specific precaution may be found in IEC 61892-1, Annex B.

Particular requirements are specified for electrical installation for cold weather conditions, when additional class notation **COLD** is applied (refer to Pt A, Ch 1, Sec 2, [6.14.12] of the Ship Rules).

1.7 Inclinations

1.7.1 The inclinations applicable to electrical and electronic equipment are those indicated in Ch 1, Sec 1, Tab 1 and Ch 1, Sec 1, Tab 2 and Ch 1, Sec 1, Tab 3.

The Society may consider deviations from these angles of inclination taking into consideration the type, size and service conditions of the units.

1.8 Vibrations

1.8.1 In relation to the location of the electrical components, the vibration levels given in Tab 4 are to be assumed.

1.8.2 The natural frequencies of the equipment, their suspensions and their supports are to be outside the frequency ranges specified.

Where this is not possible using a suitable constructional technique, the equipment vibrations are to be dumped so as to avoid unacceptable amplifications.

Table 4 : Vibration levels

Location	Frequency range, in Hz	Displacement amplitude, in mm	Acceleration amplitude, in g
Machinery spaces, command and control stations, accommodation spaces, exposed decks, cargo spaces	from 2,0 to 13,2	1,0	–
	from 13,2 to 100	–	0,7
On air compressors, on diesel engines and similar	from 2,0 to 28,0	1,6	–
	from 28,0 to 100	–	4,0
Masts	from 2,0 to 13,2	3,0	–
	from 13,2 to 50	–	2,1

2 Quality of power supply

2.1 General

2.1.1 All electrical components are to be so designed and manufactured that they are capable of operating satisfactorily under the variations of voltage, frequency and harmonic distortion of the power supply specified from [2.2] to [2.4].

2.2 a.c. distribution systems

2.2.1 For alternating current components the voltage and frequency variations of power supply shown in Tab 5 are to be assumed.

Table 5 : Voltage and frequency variations of power supply in a.c.

Variation	Parameter	
	Voltage	Frequency
Continuous	+ 6% – 10%	± 5%
Unbalanced	7%	–
Cyclic	2%	0,5%
Transient	± 20% (recovery time: 1,5 s)	± 10% (recovery time: 5 s)
Note 1: For alternating current components supplied by emergency generating sets, different variations may be considered.		

2.3 d.c. distribution systems

2.3.1 For direct current components the power supply variations shown in Tab 6 are to be assumed.

Table 6 : Voltage variations in d.c.

Parameters	Variations
Voltage tolerance (continuous)	± 10%
Voltage cyclic variation	5%
Voltage ripple (a.c. r.m.s. over steady d.c. voltage)	10%

2.3.2 For direct current components supplied by electrical battery the following voltage variations are to be assumed:

- +30% to –25% for components connected to the battery during charging (see Note 1)
- +20% to –25% for components not connected to the battery during charging.

Note 1: Different voltage variations as determined by the charging/discharging characteristics, including ripple voltage from the charging device, may be considered.

2.4 Harmonic distortions

2.4.1 For components intended for systems without substantially static converter loads and supplied by synchronous generators, it is assumed that the total voltage harmonic distortion does not exceed 5%, and the single harmonic does not exceed 3% of the nominal voltage.

2.4.2 For components intended for systems fed by static converters, and/or systems in which the static converter load predominates, it is assumed that:

- the single harmonics do not exceed 5% of the nominal voltage up to the 15th harmonic of the nominal frequency, decreasing to 1% at the 100th harmonic (see Fig 1), and
- the total harmonic distortion does not exceed 8%.

2.4.3 Higher values for the harmonic content (e.g. in electric propulsion plant systems) may be accepted on the basis of correct operation of all electrical devices.

Figure 1 : Harmonics

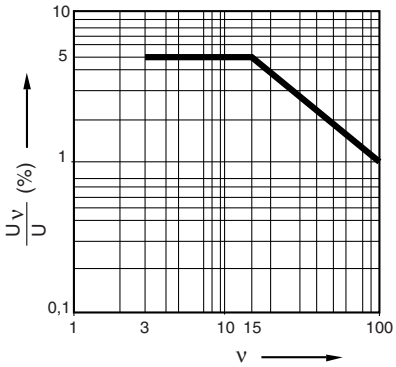

3 Electromagnetic susceptibility

3.1

3.1.1 For electronic type components such as sensors, alarm panels, automatic and remote control equipment, protective devices and speed regulators, the conducted and radiated disturbance levels to be assumed are those given in Part C, Chapter 3.

Note 1: See also IEC Publication 60533 - "Electromagnetic Compatibility of Electrical and Electronic Installations in ships and of Mobile and Fixed Offshore Units".

3.1.2 Electrical and electronic equipment on the bridge and in the vicinity of the bridge, not required neither by classification rules nor by International Conventions and liable to cause electromagnetic disturbance, shall be of type which fulfil the test requirements of test specification Ch 3, Sec 6, Tab 1, tests 19 and 20.

4 Materials

4.1 General

4.1.1 In general, and unless it is adequately protected, all electrical equipment is to be constructed of durable, flame-retardant, moisture-resistant materials which are not subject to deterioration in the atmosphere and at the temperatures to which they are likely to be exposed. Particular consideration is to be given to sea air and oil vapour contamination.

Note 1: The flame-retardant and moisture-resistant characteristics may be verified by means of the tests cited in IEC Publication 60092-101 or in other recognised standards.

4.1.2 Where the use of incombustible materials or lining with such materials is required, the incombustibility characteristics may be verified by means of the test cited in IEC Publication 60092-101 or in other recognised standards.

4.2 Insulating materials for windings

4.2.1 Insulated windings are to be resistant to moisture, sea air and oil vapour unless special precautions are taken to protect insulants against such agents.

4.2.2 The insulation classes given in Tab 7 may be used in accordance with IEC Publication 60085.

Table 7 : Insulation classes

Class	Maximum continuous operating temperature (°C)
A	105
E	120
B	130
F	155
H	180

4.3 Insulating materials for cables

4.3.1 See Ch 2, Sec 9, [2.3.1].

5 Construction

5.1 General

5.1.1 All electrical apparatus is to be so constructed as not to cause injury when handled or touched in the normal manner.

5.1.2 The design of electrical equipment is to allow accessibility to each part that needs inspection or adjustment, also taking into account its arrangement on board.

5.1.3 Enclosures are to be of adequate mechanical strength and rigidity.

5.1.4 Enclosures for electrical equipment are generally to be of metal; other materials may be accepted for accessories such as connection boxes, socket-outlets, switches and luminaires. Other exemptions for enclosures or parts of enclosures not made of metal are to be specially considered by the Society.

5.1.5 Cable entrance are not to impair the degree of protection of the relevant enclosure (see Ch 2, Sec 3, Tab 3).

5.1.6 All nuts and screws used in connection with current-carrying parts and working parts are to be effectively locked.

5.1.7 All equipment is generally to be provided with suitable, fixed terminal connectors in an accessible position for convenient connection of the external cables.

5.2 Degree of protection of enclosures

5.2.1 Electrical equipment is to be protected against the ingress of foreign bodies and water.

The minimum required degree of protection, in relation to the place of installation, is generally that specified in Ch 2, Sec 3, Tab 3.

5.2.2 The degrees of protection are to be in accordance with:

- IEC Publication No. 60529 for equipment in general
- IEC Publication No. 60034-5 for rotating machines.

5.2.3 For cable entries, see [5.1.5].

6 Protection against explosion hazard

6.1 Protection against explosive gas or vapour atmosphere hazard

6.1.1 Electrical equipment intended for use in areas where explosive gas or vapour atmospheres may occur (e.g. drilling area, cargo tanks, main deck above cargo tanks, process area, etc.), is to be of a "safe type" suitable for the relevant flammable atmosphere and for use on board. Specific requirements for electrical installations located in hazardous area are indicated in Ch 2, Sec 15.

Section 3 System Design

1 Distribution systems

1.1 Supply systems

1.1.1 The following parallel distribution systems with constant voltage may be used:

a) on d.c. installations:

- two-wire insulated (IT system)
- two-wire with one pole earthed (TN system)
- three-wire with middle wire earthed (TN system)

b) on a.c. installations (primary distribution systems):

- three-phase three-wire with insulated or impedance earthed (IT system)
- three-phase four-wire with neutral directly earthed (TN system)

c) on a.c. installations (secondary distribution systems):

- three-phase three-wire with insulated or impedance earthed (IT system)
- three-phase four-wire with neutral directly earthed (TN system)
- single-phase two-wire insulated (IT system)
- single-phase two-wire with one pole earthed (TN system)
- single-phase two-wire with mid-point of system earthed for supplying lighting and socket outlets (TN system)
- single-phase three-wire with mid-point earthed (TN system).

1.1.2 Where phase to neutral loads are to be served, systems are to be directly earthed (TN system).

Note 1: The neutral is defined for a polyphase only.

1.1.3 Hull return distribution systems are not permitted with the following exceptions:

a) impressed current cathodic protective systems

b) limited and locally earthed systems, such as starting and ignition systems of internal combustion engines, provided that any possible resulting current does not flow directly through any hazardous area

c) insulation level monitoring devices, provided that the circulation current of the device does not exceed 30 mA under the most unfavourable conditions.

1.1.4 For emergency power systems, consideration is to be given to the need for continuous operation of the consumers supplied from the emergency power system. An insulated neutral system is to be normally used to supply the emergency consumers.

1.1.5 For electrical installation located in gas dangerous area, requirements specified in Ch 2, Sec 15 apply with.

1.1.6 Distribution systems other than those listed in [1.1.1] will be considered by the Society on a case by case basis.

1.2 Maximum voltages

1.2.1 The maximum voltages for both alternating current and direct current low-voltage systems of supply for the ship's services are given in Tab 1.

1.2.2 Voltages exceeding those shown will be specially considered in the case of specific systems.

1.2.3 For high voltage systems see Ch 2, Sec 13.

Table 1 : Maximum voltages for various ship services

For:	Use	Maximum voltage (V)
Permanently installed and connected to fixed wiring	Power equipment	1000
	Cooking equipment	500
	Lighting	250
	Space heaters in accommodation spaces	250
	Control **(1)**, communication (including signal lamps) and instrumentation equipment	250
Permanently installed and connected by flexible cable	Power and heating equipment, where such connection is necessary because of the application (e.g. for moveable cranes or other hoisting gear)	1000
Socket-outlets supplying	Portable appliances which are not hand-held during operation (e.g. refrigerated containers) by flexible cables	1000
	Portable appliances and other consumers by flexible cables	250
	Equipment requiring extra precaution against electric shock where an isolating transformer is used to supply one appliance **(2) (3)**	250
	Equipment requiring extra precaution against electric shock with or without a safety transformer **(2) (3)**	50

(1) For control equipment which is part of a power and heating installation (e.g. pressure or temperature switches for starting/stopping motors), the same maximum voltage as allowed for the power and heating equipment may be used provided that all components are constructed for such voltage. However, the control voltage to external equipment is not to exceed 500 V.

(2) Both conductors in such systems are to be insulated from earth.

(3) Equipment located in narrow and wet spaces such as machinery spaces provided with bilge spaces.

2 Sources of electrical power

2.1 Main source of electrical power

2.1.1 A main source of electrical power is to be provided, of sufficient capability to supply all electrical auxiliary services necessary for maintaining the unit in normal operational and habitable conditions without recourse to the emergency source of electrical power (see list of services in Ch 2, Sec 1, [4.2] and Ch 2, Sec 1, [4.3]).

2.1.2 The main source of electrical power is to consist of at least two generating sets.

The capacity of these generating sets is to be such that in the event of any one generating set being stopped it is still be possible to supply those services necessary to provide:

a) normal operational conditions and safety (see [2.1.5])

b) minimum comfortable conditions of habitability (see Ch 2, Sec 1, [4.3.1])

c) preservation of the cargo, i. e. all the equipment which are needed for refrigerated cargo or operation of any safety device, such as inert gas generator.

Such capacity is, in addition, to be sufficient to start the largest motor without causing any other motor to stop or having any adverse effect on other equipment in operation.

2.1.3 For fixed units, other sources of electrical power supply arrangements may be acceptable subject to approval by the Society (e.g. supply from shore by fixed cables).

2.1.4 When renewable source of electrical power are used as a main source of power, specific arrangement may be found in IEC 61892-2, [4.6].

2.1.5 Those services necessary to provide normal operational conditions and safety include primary and secondary essential services.

For the purpose of calculating the capacity necessary for such services, it is essential to consider which of them can be expected to be in use simultaneously.

For a duplicated service, one being supplied electrically and the other non-electrically (e.g. driven by the main engine), the electrical capacity is not included in the above calculation.

2.1.6 The services mentioned in [2.1.5] do not include:

- cargo handling gear
- refrigerators for air-conditioning systems.

2.1.7 Where the electrical power is normally supplied by one generator, provision is to be made, upon loss of power, for automatic starting and connecting to the main switchboard of stand-by generator(s) of sufficient capacity to ensure the safety of the unit, with automatic restarting of the essential auxiliaries, in sequential operation if required. Starting and connection to the main switchboard of one generator are to be as rapid as possible, preferably within 30 seconds, but in any case not more than 45 seconds after loss of power.

Where prime movers with longer starting time are used, this starting and connection time may be exceeded upon approval from the Society.

2.1.8 Where the electrical power is normally supplied by more than one generator set simultaneously in parallel operation, provision of protection, including automatic disconnection of sufficient non-essential services and, if necessary, secondary essential services and those provided for habitability, are to be made to ensure that, in case of loss of any of these generating sets, the remaining ones are kept in operation to maintain primary essential services and to ensure safety.

2.1.9 Load shedding or other equivalent arrangements should be provided to protect the generators required in the present Article against sustained overload.

The load shedding should be automatic.

The non-essential services, services for habitability and, if necessary, the secondary essential services may be shed in order to make sure that the connected generator set(s) is/are not overloaded.

2.1.10 The emergency source of electrical power may be used for the purpose of starting from a dead ship condition if its capability either alone or combined with that of any other source of electrical power is sufficient to supply at the same time the services providing safety of all unit and a minimum of habitability conditions.

2.1.11 Where transformers, converters or similar appliances constitute an essential part of the electrical supply system, the system is to be so arranged as to ensure the same continuity of supply as stated in this sub-article.

This may be achieved by arranging at least two three-phase or three single-phase transformers supplied, protected and installed as indicated in Fig 1, so that with any one transformer not in operation, the remaining transformer(s) is/are sufficient to ensure the supply to the services stated in [2.1.2].

Each transformer required is to be located as a separate unit with separate enclosure or equivalent, and is to be served by separate circuits on the primary and secondary sides. Each of the primary and secondary circuits is to be provided with switchgears and protection devices in each phase.

Suitable interlocks or a warning label are to be provided in order to prevent maintenance or repair of one single-phase transformer unless both switchgears are opened on their primary and secondary sides.

2.1.12 Where single phase transformers are used, only one spare element is required if special precautions are taken to rapidly replace the faulty one.

2.1.13 For starting arrangements of main generating sets, see Ch 1, Sec 2, [3.1].

2.1.14 For units intended for operation with periodically unattended machinery spaces, see additional notation **AUTO** in Ch 3, Sec 7.

Figure 1 : Installation and protection of transformers

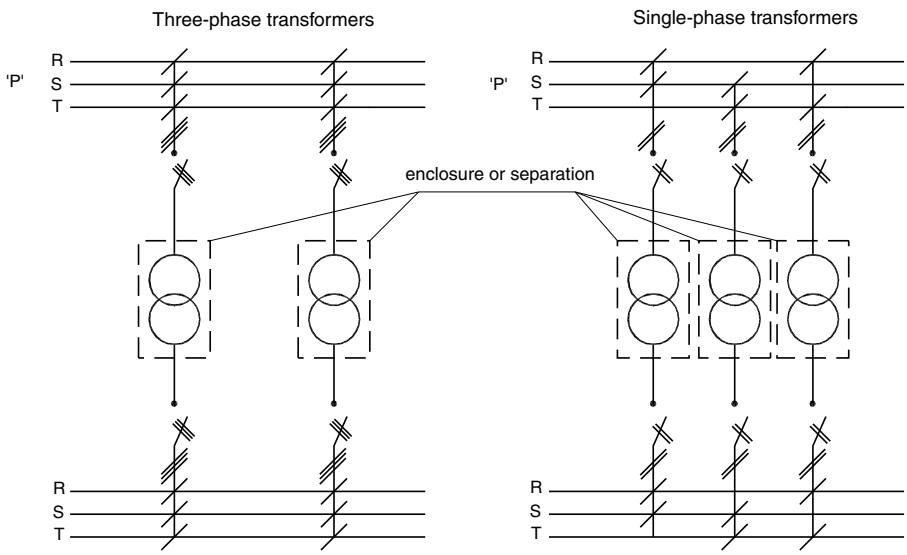

3 Emergency power sources and circuits

3.1 Emergency power source

3.1.1 A self-contained emergency source of electrical power is to be provided.

3.1.2 *Provided that suitable measures are taken for safeguarding independent emergency operation under all circumstances, the emergency generator may be used, exceptionally, and for short periods, to supply non-emergency circuits.*

Exceptionally is understood to mean conditions, while the unit is at sea, such as:

a) blackout situation

b) dead ship situation

c) routine use for testing

d) short-term parallel operation with the main source of electrical power for the purpose of load transfer.

3.1.3 *The electrical power available shall be sufficient to supply all those services that are essential for safety in an emergency, due regard being paid to such services as may have to be operated simultaneously.*

3.1.4 *The emergency source of electrical power shall be capable, having regard to starting currents and the transitory nature of certain loads, of supplying simultaneously at least the services stated in* Tab 2 *for the period specified, if they depend upon an electrical source for their operation.*

3.1.5 *An indicator shall be mounted in a suitable place on the main switchboard or in the machinery control room to indicate when the batteries constituting either the emergency source of electrical power or the transitional source of emergency electrical power referred to in* [3.1.14] *and* [3.2.1] *are being discharged.*

3.1.6 If the services which are to be supplied by the transitional source receive power from an accumulator battery by means of semiconductor converters, means are to be provided for supplying such services also in the event of failure of the converter (e.g. providing a bypass feeder or a duplication of converter).

3.1.7 Where the emergency source of power is necessary to restore the main source of electrical power, provisions are to be made to allow a manual restart of a main generating set in case of failure of the emergency source.

3.1.8 Provision is to be made for the periodic testing of the complete emergency system and is to include the testing of automatic starting arrangements. If running unattended during tests, normal prime mover and generator protections are to be provided.

3.1.9 For starting arrangements for emergency generating sets, see Ch 1, Sec 2, [3.1].

3.1.10 *The emergency source of electrical power may be either a generator or an accumulator battery which shall comply with the requirements of* [3.1.11] *or* [3.1.14]*, respectively.*

3.1.11 *Where the emergency source of electrical power is a generator, it shall be:*

a) *driven by a suitable prime mover with an independent supply of fuel, having a flashpoint (closed cup test) of not less than 43°C*

b) *started automatically upon failure of the main source of electrical power supply* to the emergency switchboard *unless a transitional source of emergency electrical power in accordance with* item c) *below is provided; where the emergency generator is automatically started, it shall be automatically connected to the emergency switchboard; those services referred to in* [3.2.1] *shall then be connected automatically to the emergency generator;* see also Ch 1, Sec 2, [3.1.3]

c) *provided with a transitional source of emergency electrical power as specified in* [3.2.1] *unless an emergency generator is provided capable both of supplying the services mentioned in that paragraph and of being automatically started and supplying the required load as quickly as is safe and practicable subject to a maximum of 45 s.*

3.1.12 *The emergency generator and its prime mover and any emergency accumulator battery should be designed to function at full rated power when upright and when inclined up to the maximum angle of heel in the intact and damaged condition, as determined in accordance with* Part B, Chapter 1. In no case need the equipment be designed to operate when inclined more than the values indicated in Ch 1, Sec 1, Tab 1 to Ch 1, Sec 1, Tab 3.

3.1.13 The availability of the emergency generator is to be maintained as far as possible. Shutdown or inhibition of emergency generator starting may be accepted for ultimate safety reasons, such as confirmed gas detection at air entrance of emergency generator room or fire detection inside emergency generator room.

3.1.14 *Where the emergency source of electrical power is an accumulator battery it shall be capable of:*

a) *carrying the emergency electrical load without recharging while maintaining the voltage of the battery throughout the discharge period within 12% above or below its nominal voltage*

b) *automatically connecting to the emergency switchboard in the event of failure of the main source of electrical power; and*

c) *immediately supplying at least those services specified in* [3.2.2].

Table 2 : Duration services and duration of services to be supplied by an emergency and a transitional source

Service	Emergency power consumers	Duration, in hours, of:	
		emergency power	transitional power
All units			
Emergency lighting	At every muster and embarkation station on deck and over sides	18	0,5 **(1)**
	In all service and accommodation alleyways, stairways and exits, personnel lift cars and personnel lift trunks	18	0,5 **(1)**
	In the machinery spaces and main generating stations including their control positions	18	0,5 **(1)**
	In all control stations, machinery control rooms, and at each main and emergency switchboard	18	0,5 **(1)**
	At the stowage positions for firemen's outfits	18	0,5 **(1)**
	At the steering gear, as applicable		0,5 **(1)**
	At the fire pump, at the sprinkler pump, if any, at the emergency bilge pump, if any, and at the starting positions of their motors	18	0,5 **(1)**
	On helideck, including landing area perimeter and obstacle lighting	18	0,5 **(1)**
Machinery and safety equipment	Fans and other equipment deemed necessary to avoid accumulation of dangerous or explosive gases	18	
	One of the fire pumps required by the Society's Rules for Classification applicable to the unit or installation considered if dependent upon the emergency generator for its source of power	18	
	Automatic sprinkler pump (if any)	18	
	The fire and gas detection and their alarm systems	18	0,5 **(2)**
Structure marking	Any signalling lights or sound signals which may be required for marking of offshore structures	96	
Navigation lights	Navigation lights and other lights required by the International Regulations for the Prevention of Collisions at Sea in force	18	0,5 **(1)**
Communications	All internal communication equipment required in an emergency	18	0,5 **(2)**
	Safety telecommunication systems	18	0,5
Doors and hatches	Power to operate watertight doors, remote controlled doors and hatch covers, together with corresponding alarms and controls, but not necessarily all of them simultaneously, unless an independent temporary source of stored energy is provided	18	
Radio installation	• According to regulations of national authorities • MODU Ch 11 and SOLAS Ch IV, where applicable	18	0,5
Miscellaneous	Permanently installed diving equipment, if dependent upon electrical power of the unit or installation	18	
Additional requirements for mobile units			
Navigation aids	Where applicable on mobile units, the navigation aids as required by Chap V Reg 19 of SOLAS 2002; where such a provision is unreasonable or impracticable, special consideration is to be given by the Society for units of less than 5000 tons gross tonnage, where applicable	18	0,5
Additional requirements for column stabilized units			
Ballast system	Control and indicating systems required by the Society's Rules for Classification applicable to the unit or installation considered	18	
	Any of the ballast pumps required by the Society's Rules for Classification applicable to the unit or installation considered	18	
Watertight doors	Power to operate the watertight doors (not necessarily all of them simultaneously)	0,5	
	Power to operate the controls and indicators	0,5	
Additional requirements for drilling units			
Emergency lighting	In all spaces from which control of the drilling process is performed and where controls of machinery essential for the performance of this process, or devices for emergency switching-off of the power plant are located	18	
Well blow out preventer	Capability of closing the blow-out preventer and of disconnecting the unit from the well-head arrangement, if electrically controlled	18	0,5 **(2)**

(1) The required emergency lighting, in respect of the machinery space and accommodation and service areas, may be provided by permanently fixed, individual accumulator lamps which are automatically charged and operated.

(2) Transitional source required unless these services have an independent supply from an accumulator battery suitably located for use in an emergency and sufficient for the period specified.

3.1.15 *For units* and installations *where the main source of electrical power is located in two or more spaces which have their own systems, including power distribution and control systems, completely independent of the systems in other spaces and so arranged that a fire or other casualty in any one of the spaces will not affect the power distribution from the others, or to the services required in* Tab 2 *and other services that may be required by the Society's Rules for Classification applicable to the unit or installation considered, the requirements of* [3.1.1] *may be considered satisfied without an additional emergency source of electrical power, provided that:*

a) there are at least two generating sets, meeting the requirements of [3.1.12] *and each of sufficient capacity to meet the requirements indicated in* Tab 2*, in each of at least two spaces*

b) the arrangements required by item a) *in each such space are equivalent to those required by* [3.1.11], Ch 2, Sec 11, [3.3], Ch 2, Sec 11, [3.5.1], as well as [3.1.5], [5.4.1], [5.4.2] and Ch 1, Sec 2, [3.1] *so that a source of electrical power is available at all times to the services required in* Tab 2

c) the location of each of the spaces referred to in item a) *is in compliance with* Ch 2, Sec 11, [3.1.1] *and the boundaries meet the requirements of* Ch 2, Sec 11, [3.2.1] *except that contiguous boundaries should consist of an "A-60" bulkhead and a cofferdam, or a steel bulkhead insulated to class "A-60" on both sides.*

3.2 Transitional source

3.2.1 *The transitional source of emergency electrical power where required by* [3.1.11] item c), *shall consist of an accumulator battery which shall operate without recharging while maintaining the voltage of the battery throughout the discharge period within 12% above or below its nominal voltage and be so arranged as to supply automatically in the event of failure of either the main or the emergency source of electrical power for half an hour at least the services in* [3.2.2] *if they depend upon an electrical source for their operation.*

3.2.2 The transitional source of emergency electrical power, where required, is to supply the services listed in Tab 2, when a duration of transitional power is indicated.

3.2.3 Where the emergency and/or transitional emergency loads are supplied from a battery via an electronic converter or inverter, the maximum permitted d.c. voltage variations are to be taken as those on the load side of the converter or inverter.

Where the d.c. is converted into a.c. the maximum variations are not exceed those given in Ch 2, Sec 2, Tab 5.

3.3 Services to be supplied by the emergency source

3.3.1 The emergency source of electrical power is to be capable of supplying simultaneously at least the services listed in Tab 2 for the periods specified, if they depend upon an electrical source for their operation.

3.4 Services to be operable after emergency shutdown

3.4.1 Electrical power is to be provided, in case of emergency shutdown causing loss of both main and emergency power so that services listed below remain available during half an hour, in order to allow the personnel on board to escape safely from the installation and to maintain contact with the external emergency services:

a) emergency lighting:
- at every muster and embarkation station on deck and over sides
- in all service and accommodation alleyways, stairways and exits, personnel lift cars and personnel lift trunks
- in the machinery spaces and main generating stations including their control positions
- in all control stations, machinery control rooms, and at each main and emergency switchboard

b) navigation aids

c) blow-out preventer control system

d) general alarm system

e) public address system

f) battery-supplied radiocommunication installations.

3.4.2 Electrical equipment required to be operable for services listed in [3.4.1] are to be compliant with dispositions relative to installation of electrical equipment in hazardous areas described in Ch 2, Sec 15.

4 System earthing

4.1 General requirements

4.1.1 Neutral earthing is to be in accordance with one of the methods specified in [1.1.1].

4.1.2 The magnitude and duration of a potential earth fault current are not to exceed the design capacity of any part of the electrical power supply system.

4.1.3 The requirements applicable for high voltage installations are detailed in Ch 2, Sec 13.

4.1.4 Additional requirements apply for the electrical power systems located in hazardous areas. See Ch 2, Sec 15, [2.2].

4.2 Earthed distribution systems

4.2.1 The neutral point is to be connected to earth directly. The earth loop impedance is to be low enough to permit the passage of a current at least three times the fuse rating for fuse protected circuits or one and a half times the tripping current of any excess current circuit breaker used to protect the circuit.

4.2.2 System earthing is to be effected by means independent of any earthing arrangements of the non-current-carrying parts.

4.2.3 Means of disconnection are to be fitted in the neutral earthing connection of each generator so that the generator may be disconnected for maintenance or insulation resistance measurements.

4.2.4 Generator neutrals may be connected in common, provided that the third harmonic content of the voltage wave form of each generator does not exceed 5%.

4.2.5 Where a switchboard is split into sections operated independently or where there are separate switchboards, neutral earthing is to be provided for each section or for each switchboard. Means are to be provided to ensure that the earth connection is not removed when generators are isolated.

4.2.6 Where for final sub-circuits it is necessary to locally connect a pole (or phase) of the sub-circuits to earth after the protective devices (e.g. in automation systems or to avoid electromagnetic disturbances), provision (e.g. d.c./d.c. converters or transformers) is to be made such that current unbalances do not occur in the individual poles or phases.

4.3 Insulated distribution systems

4.3.1 Every insulated distribution system, whether primary or secondary for power, heating or lighting, is to be provided with a device capable of continuously monitoring the insulation level to earth (i.e. the values of electrical insulation to earth) and of giving at a manned control centre an audible and visual indication of abnormally low insulation values Ch 2, Sec 17.

Note 1: A primary system is one supplied directly by generators. Secondary systems are those supplied by transformers or converters.

4.4 Impedance earthed distribution system

4.4.1 In the case of impedance earthing, the impedance should be such that the earth fault current is slightly higher than the capacitive current of system. The maximum earth fault should however be limited to:

- 100 A per generator
- 100 A per transformer.

4.4.2 Earth leakage monitoring and an alarm or automatic disconnection via earth leakage protection devices are to be provided.

4.5 Cross-sectional area of earthing connections

4.5.1 The cross-sectional areas of earthing connections are to be calculated according to the characteristics of the generators or transformers and of the protective devices.

5 Distribution

5.1 General requirements for distribution systems

5.1.1 *The distribution system is to be such that the failure of any single circuit will not endanger or impair primary essential services and will not render secondary essential services inoperative for longer periods.*

5.1.2 No common switchgear (e.g. contactors for emergency stop) is to be used between the switchboard's busbars and two primary non-duplicated essential services.

5.2 Distribution systems with hull return

5.2.1 *Where the hull return system is used,* if permitted*, all final sub-circuits, i.e. all circuits fitted after the last protective device, are to be two-wire.*

The hull return is to be achieved by connecting to the hull one of the busbars of the distribution board from which the final sub-circuits originate.

5.3 Main distribution of electrical power

5.3.1 The main busbar is to be divided into at least two parts which are normally to be connected by circuit breakers or other approved means such as circuit breakers without tripping mechanisms or switches by means of which busbars can be split safely and easily.

The connection of generating sets and associated auxiliaries and other duplicated equipment is to be equally divided between the parts as far as practicable, so that in the event of damage to one section of the switchboard the remaining parts are still supplied.

5.3.2 Two or more units serving the same consumer (e.g. main and standby lubricating oil pumps) are to be supplied by individual separate circuits without the use of common feeders, protective devices or control circuits.

This requirement is satisfied when such units are supplied by separate cables from the main switchboard or from two independent section boards.

5.3.3 *A main electric lighting system which shall provide illumination throughout those parts of the unit normally accessible to and used by crew shall be supplied from the main source of electrical power.*

5.4 Emergency distribution of electrical power

5.4.1 *The emergency switchboard shall be supplied during normal operation from the main switchboard by an interconnector feeder which shall be adequately protected at the main switchboard against overload and short-circuit and which is to be disconnected automatically at the emergency switchboard upon failure of the main source of electrical power.*

Where the system is arranged for feedback operation, the interconnector feeder is also to be protected at the emergency switchboard at least against short-circuit.

5.4.2 *In order to ensure ready availability of the emergency source of electrical power, arrangements shall be made where necessary to disconnect automatically non-emergency circuits from the emergency switchboard to ensure that power shall be available to the emergency circuits.*

5.5 Shore supply

5.5.1 Where arrangements are made for supplying the electrical installation from a source on shore or elsewhere, a suitable connection box is to be installed on the unit in a convenient location to receive the flexible cable from the external source.

5.5.2 Permanently fixed cables of adequate rating are to be provided for connecting the box to the main switchboard.

5.5.3 Where necessary for systems with earthed neutrals, the box is to be provided with an earthed terminal for connection between the shore's and unit's neutrals or for connection of a protective conductor.

5.5.4 The connection box is to contain a circuit-breaker or a switch-disconnector and fuses.

The shore connection is to be protected against short-circuit and overload; however, the overload protection may be omitted in the connection box if provided on the main switchboard.

5.5.5 Means are to be provided for checking the phase sequence of the incoming supply in relation to the unit's system.

5.5.6 The cable connection to the box is to be provided with at least one switch-disconnector on the main switchboard.

5.5.7 The shore connection is to be provided with an indicator at the main switchboard in order to show when the cable is energised.

5.5.8 At the connection box a notice is to be provided giving full information on the nominal voltage and frequency of the installation and the procedure for carrying out the connection.

5.5.9 The switch-disconnector on the main switchboard is to be interlocked with the main generator circuit-breakers in order to prevent its closure when any generator is supplying the main switchboard.

5.5.10 Adequate means are to be provided to equalise the potential between the hull and the shore when the electrical installation of the unit is supplied from shore.

5.5.11 Provisions are to be made for securing the trailing cables to the framework so that mechanical stress is not applied to the electrical terminals.

5.6 Supply of motors

5.6.1 A separate final sub-circuit is to be provided for every motor required for an essential service (and for every motor rated at 1 kW or more).

5.6.2 Each motor is to be provided with controlgear ensuring its satisfactory starting.

Direct on line starters are accepted if the voltage drop does not exceed 15% of the network voltage.

5.6.3 Efficient means are to be provided for the isolation of the motor and its associated control gear from all live poles of the supply.

Where the control gear is mounted on or adjacent to a switchboard, a disconnecting switch in the switchboard may be used for this purpose.

Otherwise, a disconnecting switch within the control gear enclosure or a separate enclosed disconnecting switch is to be provided.

5.6.4 Where the starter or any other apparatus for disconnecting the motor is remote from the motor itself, one of the following is to be arranged:

a) provision for locking the circuit disconnecting switch in the OFF position

b) an additional disconnecting switch fitted near the motor

c) provision such that the fuses in each live pole or phase can be readily removed and retained by persons authorised to have access to the motor.

5.6.5 Unless automatic restarting is required, motor control circuits are to be designed so as to prevent any motor from unintentional automatic restarting after a stoppage due to over-current tripping or a fall in or loss of voltage, if such starting is liable to cause danger. Where reverse-current braking of a motor is provided, provision is to be made for the avoidance of reversal of the direction of rotation at the end of braking, if such reversal may cause danger.

5.7 Specific requirements for special power services

5.7.1 For the supply and characteristics of the distribution of the following services see the requirements listed:

- electrical starting of diesel engines for main and emergency generators: Ch 1, Sec 2, [3.1]
- fire-extinguishing and detecting systems: Ch 4, Sec 11
- permanently installed submersible bilge pump: Ch 1, Sec 7, [6.5.7]
- ventilation fans: Ch 4, Sec 3, [5] and Ch 4, Sec 4, [5]
- fuel pumps: Ch 1, Sec 7
- pumps discharging overboard above the lightest water line and in way of the area of lifeboat and liferaft launching: Ch 1, Sec 7, [5.3.4].
- ballast pumps for column stabilized units: NR571
- heaters: Ch 2, Sec 10, [6.2.1].

5.7.2 All power circuits terminating in a bunker or cargo space are to be provided with a multiple-pole switch outside the space for disconnecting such circuits.

5.8 Power supply to the speed control systems of generator sets

5.8.1 Each electrically operated control and/or speed control system of generator sets is to be provided with a separate supply from the main source of electric power and from an accumulator battery for at least 15 minutes or from a similar supply source.

5.8.2 The speed control systems of generator sets are to be supplied from the main switchboard or from independent section boards.

Where the main busbars are divided into two sections, the governors are, as far as practicable, to be supplied from the sections to which the relevant generators are connected.

5.9 Power supply to lighting installations

5.9.1 Final sub-circuits for lighting supplying more than one lighting point and for socket-outlets are to be fitted with protective devices having a current rating not exceeding 16 A.

5.9.2 Final circuits for lighting are not to supply appliances for heating and power except that small galley equipment (e.g. toasters, mixers, coffee makers) and small miscellaneous motors (e.g. desk and cabin fans, refrigerators) and wardrobe heaters and similar items may be supplied.

5.9.3 Discharge lamp luminaires or installations of voltages above 250 V are to be provided with a multipole disconnecting switch in an accessible location.

Such a switch is to be clearly marked and a warning note is to be placed nearby.

Switches or other current-interrupting devices are not to be installed in the secondary circuit of transformers.

5.10 Special lighting services

5.10.1 In spaces such as:

- main and large machinery spaces
- large galleys
- passageways
- stairways leading to boat-decks
- public spaces,

there is to be more than one final sub-circuit for lighting, one of which is to be supplied from the emergency switchboard, in such a way that failure of any one circuit does not reduce the lighting to an insufficient level.

5.10.2 All lighting circuits terminating in a bunker or cargo space are to be provided with a multiple-pole switch outside the space for disconnecting such circuits.

5.10.3 The number of lighting points (lamps) supplied by a final sub-circuit having a current rating not exceeding 16 A is not to exceed the following maxima:

- 10 lamps for voltage up to 55 V
- 14 lamps for voltage from 56 V up to 120 V
- 24 lamps for voltage from 121 V to 250 V.

5.10.4 Final sub-circuits for lighting in accommodation spaces may include socket-outlets. In that case, each socket-outlet counts for two lighting points.

5.11 Navigation lights

5.11.1 The following requirements [5.11.2] to [5.11.6] are applicable to fixed navigation lights installed on mobile units, where required by National Authorities.

5.11.2 Navigation lights are to be connected separately to a distribution board specially reserved for this purpose.

5.11.3 The distribution board in [5.11.2] is to be supplied from two alternative circuits, one from the main source of power and one from the emergency source of power; see also [5.4].

The transfer of supply is to be practicable from the bridge, or the central control position, as appropriate, for example by means of a switch.

5.11.4 Each navigation light is to be controlled and protected in each insulated pole by a double-pole switch and a fuse or, alternatively, by a double-pole circuit-breaker, fitted on the distribution board referred to in [5.11.2].

5.11.5 Where there are double navigation lights, i.e. lights with two lamps or where for every navigation light a spare is also fitted, the connections to such lights may run in a single cable provided that means are foreseen in the distribution board to ensure that only one lamp or light may be supplied at any one time.

5.11.6 Each navigation light is to be provided with an automatic indicator giving audible and/or visual warning in the event of failure of the light. If an audible device alone is fitted, it is to be connected to a separate source of supply from that of the navigation lights, for example an accumulator (storage) battery.

If a visual signal is used connected in series with the navigation light, means are to be provided to prevent the extinction of the navigation light due to the failure of the visual signal.

A minimum level of visibility is to be assured in the case of use of dimmer devices.

5.12 Offshore structure marking

5.12.1 Marking lights and sound signals are to be fitted on offshore structures, following IALA recommendations and national authorities regulations, where applicable, and supplied for the period defined in Tab 2.

5.13 Installation of water-based local application fire-fighting systems (FWBLAFFS)

5.13.1 The system is to be capable of manual release.

5.13.2 The activation of the fire-fighting system is not to result in loss of electrical power.

6 Degrees of protection of the enclosures

6.1 General

6.1.1 The minimum required degree of protection for electrical equipment, in relation to the place of installation, is generally that specified in Tab 3.

Table 3 : Minimum required degrees of protection

Condition in location	Example of location	Switchboard, control gear, motor starters	Generators	Motors	Transformers	Luminaires	Heating appliances	Cooking appliances	Socket outlets	Accessories (e.g. switches, connection boxes)
Danger of touching live parts only	Dry accommodation spaces, dry control rooms	IP 20	X **(1)**	IP 20	IP 20	IP 20	IP 20	IP 20	IP 20	IP 20
Danger of dripping liquid and/or moderate mechanical damage	Control rooms, wheel-house, radio room	IP 22	X	IP 22	IP 22	IP 22	IP 22	IP 22	IP 22	IP 22
	Engine and boiler rooms above floor	IP 22	IP 22	IP 22	IP 22	IP 22	IP 22	IP 22	IP 44	IP 44
	Steering gear rooms	IP 22	IP 22	IP 22	IP 22	IP 22	IP 22	X	IP 44	IP 44
	Emergency machinery rooms	IP 22	IP 22	IP 22	IP 22	IP 22	IP 22	X	IP 44	IP 44
	General storerooms	IP 22	X	IP 22	IP 22	IP 22	IP 22	X	IP 22	IP 44
	Pantries	IP 22	X	IP 22	IP 22	IP 22	IP 22	IP 22	IP 44	IP 44
	Provision rooms	IP 22	X	IP 22	IP 22	IP 22	IP 22	X	IP 44	IP 44
	Ventilation ducts	X	X	IP 22	X	X	X	X	X	X
Increased danger of liquid and/or mechanical damage	Bathrooms and/or showers	X	X	X	X	IP 34	IP 44	X	IP 55	IP 55
	Engine and boiler rooms below floor	X	X	IP 44	X	IP 34	IP 44	X	X	IP 55
	Closed fuel oil separator rooms	IP 44	X	IP 44	IP 44	IP 34	IP 44	X	X	IP 55
	Closed lubricating oil separator rooms	IP 44	X	IP 44	IP 44	IP 34	IP 44	X	X	IP 55
	Enclosed spaces on Topsides and drilling areas	IP 44	IP 44	IP 44	IP 44	IP 34	IP 44	X	IP 55	IP 55
Increased danger of liquid and mechanical damage	Ballast pump rooms	IP 44	X	IP 44	IP 44	IP 34	IP 44	X	IP 55	IP 55
	Refrigerated rooms	X	X	IP 44	X	IP 34	IP 44	X	IP 55	IP 55
	Galleys and laundries	IP 44	X	IP 44	IP 44	IP 34	IP 44	IP 44	IP 44	IP 44
	Public bathrooms and shower	X	X	IP 44	IP 44	IP 34	IP 44	X	IP 44	IP 44
Danger of liquid spraying, presence of cargo dust, serious mechanical damage, aggressive fumes	Shaft or pipe tunnels in double bottom	IP 55	X	IP 55	IP 55	IP 55	IP 55	X	IP 56	IP 56
	Holds for general cargo	X	X	IP 55	X	IP 55	IP 55	X	IP 56	IP 56
	Ventilation trunks	X	X	IP 55	X	X	X	X	X	X
Danger of liquid in massive quantities	Open decks	IP 56	X	IP 56	X	IP 55	IP 56	X	IP 56	IP 56
	Topsides and drilling areas	IP 56	IP 56	IP 56	IP 56	IP 55	IP 56	X	IP 56	IP 56

(1) The symbol "X" denotes equipment which it is not advised to install.

6.1.2 Equipment supplied at nominal voltages in excess of 500 V and accessible to non-authorised personnel (e.g. equipment not located in machinery spaces or in locked compartments under the responsibility of the unit's masters) is to have a degree of protection against touching live parts of at least IP 4X.

6.1.3 In addition to the requirements of this paragraph, equipment installed in spaces with an explosion hazard is also subject to the provisions of Ch 2, Sec 15.

6.1.4 The enclosures of electrical equipment for the monitoring and control of watertight doors which are situated below the bulkhead deck are to provide suitable protection against the ingress of water.

In particular, the minimum required degree of protection is to be:

- IP X7 for electric motors, associated circuits and control components
- IP X8 for door position indicators and associated circuit components
- IP X6 for door movement warning signals.

Note 1: The water pressure testing of the enclosures protected to IP X8 is to be based on the pressure that may occur at the location of the component during flooding for a period of 36 hours.

6.2 Installation of electrical and electronic equipment in engine rooms protected by fixed water-based local application fire-fighting systems (FWBLAFFS)

6.2.1 Unless it is essential for safety or operational purposes, electrical and electronic equipment is not to be located within areas protected by FWBLAFFS and in adjacent areas where water may extend.

The electrical and electronic equipment located within areas protected by FWBLAFFS and those within adjacent exposed to direct spray are to have a degree of protection not less than IP 44, except where evidence of suitability is submitted to and approved by the Society.

Electrical and electronic equipment within adjacent areas not exposed to direct spray may have a lower degree of protection provided evidence of suitability for use in these areas is submitted taking into account the design and equipment layout, e.g. position of inlet ventilation openings, filters, baffles, etc. to prevent or restrict the ingress mist/spray into the equipment. The cooling airflow for the equipment is to be assured.

Note 1: Definitions (see Fig 2):

- protected space: machinery space where a FWBLAFFS is installed
- protected areas: areas within a protected space which is required to be protected by FWBLAFFS
- adjacent areas:
  - areas other those protected areas, exposed
  - areas other those defined above, where water may extend.

Note 2: Additional precautions may be required to be taken in respect of:

- tracking as the result of water entering the equipment
- potential damage as the result of residual salts from sea water systems
- high voltage installations
- personnel protection against electric shock.

Equipment may require maintenance after being subjected to water mist/spray.

Figure 2 : Definitions of areas

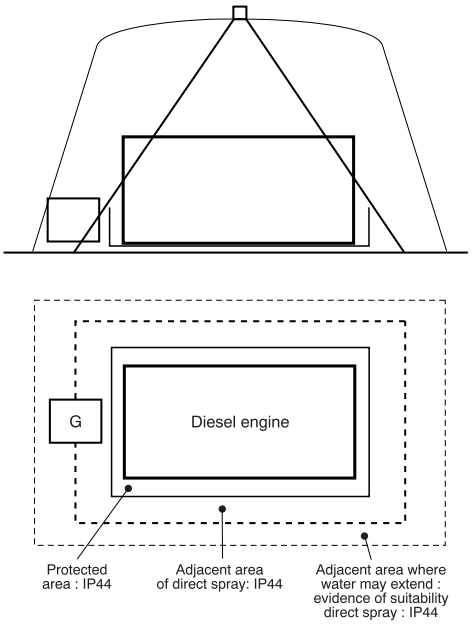

7 Diversity (demand) factors

7.1 General

7.1.1 The cables and protective devices of final sub-circuits are to be rated in accordance with their connected load.

7.1.2 Circuits supplying two or more final sub-circuits are to be rated in accordance with the total connected load subject, where justifiable, to the application of a diversity (demand) factor.

7.1.3 A diversity (demand) factor may be applied provided the known or anticipated operating conditions in a particular part of an installation are suitable for the application of diversity.

8 Environmental categories of the equipment

8.1 Environmental categories

8.1.1 The environmental categories of the electrical equipment, in relation to the place of installation, are generally to be those specified in Tab 4.

8.1.2 For units operating outside the tropical belt, the maximum ambient air temperature may be assumed as equal to +40°C instead of +45°C, so that the first characteristic numeral changes from 1 to 3.

Table 4 : Required environmental categories - Location within main area

Main areas on board	General	Inside cubicles, desks, etc.	On machinery such as internal combustion engines, compressors	Masts
Machinery spaces, steering gear	EC21	EC31	EC23	X **(1)**
Control room, accommodation	EC21 EC11C	EC31	X	X
Bridge	EC21B EC11BC	EC31B	X	X
Pump room, holds, rooms without heating	EC41	X	X	X
Exposed decks	EC41S EC41BS	X	X	EC42S EC42BS
(1) The symbol "X" denotes locations which are generally not applicable.				

9 Electrical protection

9.1 General requirements for overcurrent protection

9.1.1 Electrical installations are to be protected against accidental overcurrents including short-circuit.

The choice, arrangement and performance of the various protective devices are to provide complete and coordinated automatic protection in order to ensure as far as possible:

- continuity of service in the event of a fault, through coordinated and discriminative action of the protective devices
- elimination of the effects of faults to reduce damage to the system and the hazard of fire as far as possible.

Note 1: An overcurrent is a current exceeding the nominal current.

Note 2: A short-circuit is the accidental connection by a relatively low resistance or impedance of two or more points in a circuit which are normally at different voltages.

9.1.2 Devices provided for overcurrent protection are to be chosen according to the requirements, especially with regard to overload and short-circuit.

Note 1: Overload is an operating condition in an electrically undamaged circuit which causes an overcurrent.

9.1.3 Systems are to be such as to withstand the thermal and electrodynamic stresses caused by the possible overcurrent, including short-circuit, for the admissible duration.

9.2 Short-circuit currents

9.2.1 In calculating the maximum prospective short-circuit current, the source of current is to include the most powerful configuration of generators which can be simultaneously connected (as far as permitted by any interlocking arrangements), and the maximum number of motors which are normally simultaneously connected in the system.

The maximum number of generators or transformers is to be evaluated without taking into consideration short-term parallel operation (e.g. for load transfer) provided that suitable interlock is foreseen.

9.2.2 Short-circuit current calculations are to be performed in accordance with a method recognised by the Society, such as that given in IEC Publication 61363-1, 60909 series, as appropriate to the installation.

9.2.3 In the absence of precise data concerning the characteristics of generators, accumulator batteries and motors, the maximum short-circuit currents on the main busbars may be calculated as follows:

- for alternating current systems:
  $I_{ac} = 10\ I_{TG} + 3{,}5\ I_{TM}$
  $I_{pk} = 2{,}4\ I_{ac}$
- for direct current systems supplied by batteries:
  $I_p = K\ C_{10} + 6\ I_{TM}$

where:

I_p	:	Maximum short-circuit current
I_{ac}	:	r.m.s. value of the symmetrical component (at the instant T/2)
I_{pk}	:	Maximum peak value
I_{TG}	:	Rated current of all generators which can be connected simultaneously
C_{10}	:	Battery capacity, in A·h, for a discharge duration of 10 hours
K	:	Ratio of the short-circuit current of the batteries to C_{10} (see Note 1)
I_{TM}	:	Rated current of all motors which are normally simultaneously connected in the system.

Note 1: For stationary batteries the following values may be assumed for guidance:

- vented lead-acid batteries: K = 8
- vented alkaline type batteries intended for discharge at low rates corresponding to a battery duration exceeding three hours: K = 15
- sealed lead-acid batteries having a capacity of 100 A·h or more or alkaline type batteries intended for discharge at high rates corresponding to a battery duration not exceeding three hours: K = 30.

9.3 Selection of equipment

9.3.1 Circuit-breakers of withdrawable type are required where they are not suitable for isolation.

9.3.2 Equipment is to be chosen on the basis of its rated current and its making/breaking capacity.

9.3.3 In the selection of circuit-breakers with intentional short-time delay for short-circuit release, those of utilisation category B are to be used and they are to be selected also taking into account their rated short-time withstand current capacity (I_{cw}).

For circuit-breakers without intentional short-time delay for short-circuit release, circuit breakers of utilisation category A may be used and they are to be selected according to their rated service short-circuit breaking capacity (I_{cs}).

Note 1: For the purpose of these Rules, utilisation categories A and B are defined as follows:

- utilisation category A: circuit-breakers not specifically intended for selectivity under short-circuit conditions with respect to other short-circuit protective devices in series on the load side, i.e. without an intentional short-time delay provided for selectivity under short-circuit conditions
- utilisation category B: circuit-breakers specifically intended for selectivity under short-circuit conditions with respect to other short-circuit protective devices in series on the load side, i.e. with an intentional short-time delay (which may be adjustable) provided for selectivity under short-circuit conditions.

9.3.4 For duplicated essential services and non-essential services, circuit-breakers may be selected according to their ultimate short-circuit breaking capacity (I_{cu}).

9.3.5 For switches, the making/breaking capacity is to be in accordance with utilisation category AC-22 A or DC-22 A (in compliance with IEC Publication 60947-3).

9.3.6 For fuse-switch disconnectors or switch-disconnector fuse units, the making/breaking capacity is to be in accordance with utilisation categories AC-23 A or DC-23 A (in compliance with IEC Publication 60947-3).

9.4 Protection against short-circuit

9.4.1 Protection against short-circuit currents is to be provided by circuit- breakers or fuses.

9.4.2 The rated short-circuit breaking capacity of every protective device is to be not less than the maximum prospective value of the short-circuit current at the point of installation at the instant of contact separation.

9.4.3 The rated short-circuit making capacity of every mechanical switching device intended to be capable of being closed on short-circuit is to be not less than the maximum value of the short-circuit current at the point of installation. On alternating current this maximum value corresponds to the peak value allowing for maximum asymmetry.

9.4.4 Every protective device or contactor not intended for short-circuit interruption is to be adequate for the maximum short-circuit current liable to occur at the point of installation having regard to the time required for the short-circuit to be removed.

9.4.5 The use of a protective device not having a short-circuit breaking or making capacity at least equal to the maximum prospective short-circuit current at the point where it is installed is permitted, provided that it is backed up on the generator side by a fuse or by a circuit-breaker having at least the necessary short-circuit rating and not being the generator circuit-breaker.

9.4.6 The same fuse or circuit-breaker may back up more than one circuit-breaker where the circuits concerned do not involve essential services.

9.4.7 The short-circuit performance of the back-up arrangement is to be equal to the requirements of IEC Publication 60947-2 for a single circuit-breaker having the same short-circuit performance category as the backed-up circuit-breaker and rated for the maximum prospective short-circuit level at the supply terminals of the arrangement.

9.4.8 Circuit-breakers with fuses connected to the load side may be used, provided the back-up fuses and the circuit-breakers are of coordinated design, in order to ensure that the operation of the fuses takes place in due time so as to prevent arcing between poles or against metal parts of the circuit-breakers when they are submitted to overcurrents involving the operation of the fuse.

9.4.9 When determining the performance requirements for the above-mentioned back-up protection arrangement, it is permissible to take into account the impedance of the various circuit elements of the arrangement, such as the impedance of a cable connection when the backed-up circuit-breaker is located away from the back-up breaker or fuse.

9.5 Continuity of supply and continuity of service

9.5.1 The protection of circuits is to be such that a fault in one service does not cause the loss of any essential services.

9.5.2 The protection of the emergency circuit is to be such that a failure in one circuit does not cause a loss of other emergency services.

Note 1: The continuity of supply for the primary essential services and the continuity of service for the secondary essential services are to be ensured.

The continuity of supply is the condition for which during and after a fault in a circuit, the supply to the healthy circuits (see circuit 3 in Fig 3) is permanently ensured.

The continuity of service is the condition for which after a fault in a circuit has been cleared, the supply to the healthy circuits (see circuit 3 in Fig 3) is re-established.

Figure 3 : Continuity of supply and continuity of service

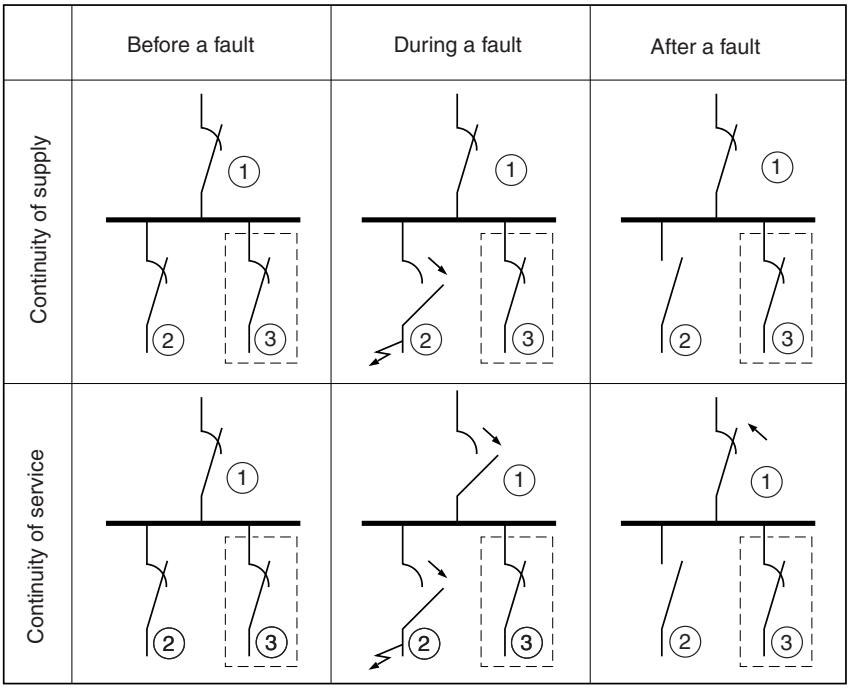

9.6 Protection against overload

9.6.1 Devices provided for overload protection are to have a tripping characteristic (overcurrent-trip time) adequate for the overload ability of the elements of the system to be protected and for any discrimination requirements.

9.6.2 The use of fuses up to 320 A for overload protection is permitted.

9.7 Localisation of overcurrent protection

9.7.1 Short-circuit protection is to be provided for every non-earthed conductor.

9.7.2 Overload protection is to be provided for every non-earthed conductor; nevertheless, in insulated single-phase circuits or insulated three-phase circuits having substantially balanced loads, the overload protection may be omitted on one conductor.

9.7.3 Short-circuit and overload protective devices are not to interrupt earthed conductors, except in the case of multiple disconnection devices which simultaneously interrupt all the conductors, whether earthed or not.

9.7.4 Electrical protection is to be located as close as possible to the origin of the protected circuit.

9.8 Protection of generators

9.8.1 Generators are to be protected against short-circuits and overloads by multipole circuit-breakers.

For generators not arranged to operate in parallel with a rated output equal to or less than 50 kVA, a multipole switch with a fuse in each insulated phase on the generator side may be accepted.

9.8.2 When multipole switch and fuses are used, the fuse rating is to be maximum 110% of the generator rated current.

9.8.3 Where a circuit-breaker is used:

a) The overload protection is to trip the generator circuit-breaker at an overload between 10% and 50%; for an overload of 50% of the rated current of the generator the time delay is not to exceed 2 minutes; however, the figure of 50% or the time delay of 2 minutes may be exceeded if the construction of the generator permits this.

b) The setting of the short-circuit protection is to instantaneously trip the generator circuit-breaker at an overcurrent less than the steady short-circuit current of the generator. Short time delays (e.g. from 0,5 s to 1 s) may be introduced for discrimination requirements in “instantaneous” tripping devices.

9.8.4 For emergency generators the overload protection may, instead of disconnecting the generator automatically, give a visual and audible alarm in a permanently attended space.

9.8.5 After disconnection of a generator due to overload, the circuit-breaker is to be ready for immediate reclosure.

9.8.6 Generator circuit-breakers are to be provided with a reclosing inhibitor which prevents their automatic reclosure after tripping due to a short-circuit.

9.8.7 Generators having a capacity of 1500 kVA or above are to be equipped with a suitable protective device or system which, in the event of a short-circuit in the generator or in the supply cable between the generator and its circuit-breaker, will de-excite the generator and open the circuit-breaker (e.g. by means of differential protection).

9.8.8 Arrangements are to be made to disconnect or reduce automatically the excess load when the generators are overloaded in such a way as to prevent a sustained loss of speed and/or voltage (see Ch 2, Sec 2, Tab 5). The operation of such device is to activate a visual and audible alarm. A time delay of 5-20 s is considered acceptable.

9.8.9 When an overload is detected the load shedding system is to disconnect automatically, after an appropriate time delay, the circuits supplying the non-essential services and, if necessary, the secondary essential services in a second stage.

9.8.10 Alternating current generators arranged to operate in parallel are to be provided with reverse-power protection.

The protection is to be selected in accordance with the characteristics of the prime mover.

The following values are recommended:

- 2-6% of the rated power for turbogenerators
- 8-15% of the rated power for diesel generators.

The reverse-power protection may be replaced by other devices ensuring adequate protection of the prime movers.

9.8.11 Generators are to be provided with an undervoltage protection which trips the breaker if the voltage falls to 70%-35% of the rated voltage.

The undervoltage release also prevents the closing of the circuit-breaker if the generator voltage does not reach a minimum of 85% of the rated voltage.

The operation of the undervoltage release is to be instantaneous when preventing closure of the breaker, but it is to be delayed for selectivity purposes when tripping the breaker.

9.8.12 Generators are to be provided with overvoltage protection to avoid damage to the connected equipment.

9.9 Protection of circuits

9.9.1 *Each separate circuit shall be protected against short-circuit and against overload, unless otherwise specified in these Rules or where the Society may exceptionally otherwise permit.*

9.9.2 Each circuit is to be protected by a multipole circuit-breaker or switch and fuses against overloads and short-circuits.

9.9.3 Circuits for lighting are to be disconnected on both non-earthed conductors; single-pole disconnection of final sub-circuits with both poles insulated is permitted only in accommodation spaces, when a differential protection is provided.

9.9.4 The protective devices of the circuits supplying motors are to allow excess current to pass during transient starting of motors.

9.9.5 Final sub-circuits which supply one consumer with its own overload protection (for example motors), or consumers which cannot be overloaded (for example permanently wired heating circuits and lighting circuits), may be provided with short-circuit protection only.

9.10 Protection of motors

9.10.1 Motors of rating exceeding 1 kW and all motors for essential services are to be protected individually against overload and short-circuit. The short-circuit protection may be provided by the same protective device for the motor and its supply cable (see [9.9.5]).

9.10.2 For motors intended for essential services, the overload protection may be replaced by an overload alarm.

9.10.3 The protective devices are to be designed so as to allow excess current to pass during the normal accelerating period of motors according to the conditions corresponding to normal use.

If the current/time characteristic of the overload protection device does not correspond to the starting conditions of a motor (e.g. for motors with extra-long starting period), provision may be made to suppress operation of the device during the acceleration period on condition that the short-circuit protection remains operational and the suppression of overload protection is only temporary.

9.10.4 For continuous duty motors the protective gear is to have a time delay characteristic which ensures reliable thermal protection against overload.

9.10.5 The protective devices are to be adjusted so as to limit the maximum continuous current to a value within the range 105% - 120% of the motor's rated full load current.

9.10.6 For intermittent duty motors the current setting and the delay (as a function of time) of the protective devices are to be chosen in relation to the actual service conditions of the motor.

9.10.7 Where fuses are used to protect polyphase motor circuits, means are to be provided to protect the motor against unacceptable overload in the case of single phasing.

9.10.8 Motors rated above 1 kW are to be provided with:

- undervoltage protection, operating on the reduction or failure of voltage, to cause and maintain the interruption of power in the circuit until the motor is deliberately restarted or
- undervoltage release, operating on the reduction or failure of voltage, so arranged that the motor restarts automatically when power is restored after a power failure.

9.10.9 The automatic restart of a motor is not to produce a starting current such as to cause excessive voltage drop.

In the case of several motors required to restart automatically, the total starting current is not to cause an excessive voltage drop or sudden surge current; to this end, it may be necessary to achieve a sequence start.

9.10.10 The undervoltage protective devices are to allow the motor to be started when the voltage exceeds 85% of the rated voltage and are to intervene without fail when the voltage drops to less than approximately 20% of the rated voltage, at the rated frequency and with a time delay as necessary.

9.11 Protection of storage batteries

9.11.1 Batteries are to be protected against overload and short-circuit by means of fuses or multipole circuit-breakers at a position adjacent to the battery compartment.

Note 1: Overcurrent protection may be omitted for the circuit to the starter motors when the current drawn is so large that is impracticable to obtain short-circuit protection.

Note 2: For starting systems, when conductors from the batteries are not protected against short-circuiting and overload, they are to be installed so as to be adequately protected against short-circuits and earth faults and as short as possible.

9.11.2 Emergency batteries supplying essential services are to have short-circuit protection only.

9.12 Protection of shore power connection

9.12.1 Permanently fixed cables connecting the shore connection box to the main switchboard are to be protected by fuses or circuit-breakers (see [5.5.4]).

9.13 Protection of measuring instruments, pilot lamps and control circuits

9.13.1 Measuring circuits and devices (voltage transformers, voltmeters, voltage coils of measuring instruments, insulation monitoring devices etc.) and pilot lamps are to be protected against short-circuit by means of multipole circuit-breakers or fuses.

The protective devices are to be placed as near as possible to the tapping from the supply.

The secondary side of current transformers is not to be protected.

9.13.2 Control circuits and control transformers are to be protected against overload and short-circuit by means of multipole circuit-breakers or fuses on each pole not connected to earth.

Overload protection may be omitted for transformers with a rated current of less than 2 A on the secondary side.

The short-circuit protection on the secondary side may be omitted if the transformer is designed to sustain permanent short-circuit current.

9.13.3 Where a fault in a pilot lamp would impair the operation of essential services, such lamps are to be protected separately from other circuits such as control circuits.

Note 1: Pilot lamps connected via short-circuit-proof transformers may be protected in common with control circuits.

9.13.4 Circuits whose failure could endanger operation, such as steering gear control feeder circuits, are to be protected only against short-circuit.

9.13.5 The protection is to be adequate for the minimum cross-section of the protected circuits.

9.14 Protection of transformers

9.14.1 The primary winding side of power transformers is to be protected against short-circuit and overload by means of multipole circuit-breakers or switches and fuses.

Overload protection on the primary side may be dispensed with where it is provided on the secondary side or when the total possible load cannot reach the rated power of the transformer.

9.14.2 The protection against short-circuit is to be such as to ensure the selectivity between the circuits supplied by the secondary side of the transformer and the feeder circuit of the transformer.

9.14.3 When transformers are arranged to operate in parallel, means are to be provided so as to trip the switch on the secondary winding side when the corresponding switch on the primary side is open.

10 System components

10.1 General

10.1.1 The components of the electrical system are to be dimensioned such as to withstand the currents that can pass through them during normal service without their rating being exceeded.

10.1.2 The components of the electrical system are to be designed and constructed so as to withstand for the admissible duration the thermal and electrodynamic stresses caused by possible overcurrents, including short-circuit.

11 Electrical cables

11.1 General

11.1.1 *All electrical cables and wiring external to equipment shall be at least of a flame-retardant type,* in accordance with IEC Publication 60332-1.

11.1.2 In addition to the provisions of [11.1.1], when cables are laid in bunches, cable types are to be chosen in compliance with IEC Publication 60332-3 Category A, or other means (see Ch 2, Sec 12) are to be provided such as not to impair their original flame-retarding properties.

11.1.3 Where necessary for specific applications such as radio frequency or digital communication systems, which require the use of particular types of cables, the Society may permit the use of cables which do not comply with the provisions of [11.1.1] and [11.1.2].

11.1.4 Cables which are required to have fire-resisting characteristics are to comply with the requirements stipulated in IEC Publication 60331.

11.2 Choice of insulation

11.2.1 The maximum rated operating temperature of the insulating material is to be at least 10°C higher than the maximum ambient temperature liable to occur or to be produced in the space where the cable is installed.

11.2.2 The maximum rated conductor temperature for normal and short-circuit operation, for the type of insulating compounds normally used for cables onboard, is not to exceed the values stated in Tab 5. Special consideration is to be given to other insulating materials.

11.2.3 PVC-ST2 insulated cables are not to be used either in refrigerated spaces, or on decks exposed to the weather of units classed for unrestricted service.

11.2.4 Mineral insulated cables is to be considered on a case by case basis.

Table 5 : Maximum rated conductor temperature

Type of insulating compound	Abbreviated designation	Maximum rated conductor temperature (°C)	
		Normal operation	Short-circuit
a) Thermoplastic:			
- based upon polyvinyl chloride or copolymer of vinyl chloride and vinyl acetate	PVC/A	70	150
b) Elastomeric or thermosetting:			
- based upon ethylene-propylene rubber or similar (EPM or EPDM)	EPR	90	250
- based upon high modulus or hardgrade ethylene propylene rubber	HEPR	90	250
- based upon cross-linked polyethylene	XLPE	90	250
- based upon rubber silicon	S 95	95	350**(1)**
- based upon ethylene-propylene rubber or similar (EPM or EPDM) halogen free	HF EPR	90	250
- based upon high modulus or hardgrade halogen free ethylene propylene rubber	HF HEPR	90	250
- based upon cross-linked polyethylene halogen free	HF XLPE	90	250
- based upon rubber silicon halogen free	HF S 95	95	350**(1)**
- based upon cross-linked polyolefin material for halogen free cable	HF 90	90	250
(1) This temperature is applicable only to power cables and not appropriate for tinned copper conductors			

11.3 Choice of protective covering

11.3.1 The conductor insulating materials are to be enclosed in an impervious sheath of material appropriate to the expected ambient conditions where cables are installed in the following locations:

- on decks exposed to the weather
- in damp or wet spaces (e.g. in bathrooms)
- in refrigerated spaces
- in machinery spaces and, in general
- where condensation water or harmful vapour may be present.

11.3.2 Where cables are provided with armour or metallic braid (e.g. for cables installed in hazardous areas), an overall impervious sheath or other means to protect the metallic elements against corrosion is to be provided; see Ch 2, Sec 9, [2.5].

11.3.3 An impervious sheath is not required for single-core cables installed in tubes or ducts inside accommodation spaces, in circuits with maximum system voltage 250 V.

11.3.4 In choosing different types of protective coverings, due consideration is to be given to the mechanical action to which each cable may be subjected during installation and in service.

If the mechanical strength of the protective covering is considered insufficient, the cables are to be mechanically protected (e.g. by an armour or by installation inside pipes or conduits).

11.3.5 Single-core cables for a.c. circuits with rated current exceeding 20 A are to be either non-armoured or armoured with non-magnetic material.

11.4 Cables in refrigerated spaces

11.4.1 Cables installed in refrigerated spaces are to have a watertight or impervious sheath and are to be protected against mechanical damage. If an armour is applied on the sheath, the armour is to be protected against corrosion by a further moisture-resisting covering.

11.5 Cables in areas with a risk of explosion

11.5.1 For cables in areas with a risk of explosion, see Ch 2, Sec 15, [5.1].

11.6 Cables in circuits required to be operable under fire condition

11.6.1 Electrical services required to be operable under fire conditions are as follows:

- control and power systems to power-operated fire doors and status indication for all fire doors
- control and power systems to power-operated watertight doors and their status indication
- emergency fire pump
- emergency lighting
- fire and general alarms
- fire detection systems
- fire-extinguishing systems and fire-extinguishing media release alarms
- low location lighting
- public address systems
- remote emergency stop/shutdown arrangements for systems which may support the propagation of fire and/or explosion.

11.6.2 Where cables for services specified in [11.6.1] including their power supplies pass through high fire risk areas, they are to be so arranged that a fire in any of these areas does not affect the operation of the service in any other area. This may be achieved by either of the following measures:

a) Cables being of a fire resistant type complying with Ch 2, Sec 9, [2.1.8] are to be installed and run continuous to keep the fire integrity within the high fire risk area (see Fig 4).

b) At least two-loops/radial distributions run as widely apart as is practicable and so arranged that in the event of damage by fire at least one of the loops/radial distributions remains operational.

Systems that are self monitoring, fail safe or duplicated with cable runs as widely separated as is practicable may be exempted.

11.6.3 Cables for services required to be operable under fire conditions, including their power supplies, are to be run as directly as is practicable.

11.6.4 *Cables connecting fire pumps to the emergency switchboard shall be of a fire-resistant type where they pass through high fire risk areas.*

Figure 4 : Routing of cables in high fire risk area

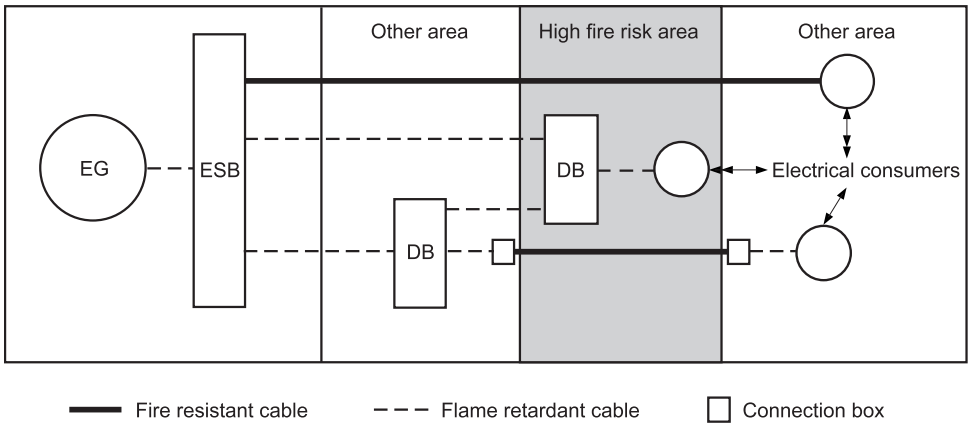

11.7 Cables for submerged bilge pumps

11.7.1 Cables and their connections to such pumps are to be capable of operating under a head of water equal to their distance below the bulkhead deck. The cable is to be impervious-sheathed and armoured, is to be installed in continuous lengths from above the bulkhead to the motor terminals and is to enter the air bell from the bottom.

11.8 Internal wiring of switchboards and other enclosures for equipment

11.8.1 For installation in switchboards and other enclosures for equipment, single-core cables may be used without further protection (sheath).

Other types of flame-retardant switchboard wiring may be accepted at the discretion of the Society.

11.9 Current carrying capacity of cables

11.9.1 Current carrying capacity of cables are depending of installation conditions, according to requirements of IEC publication 60092-352. The present Rules show values extracted from the method "B", based on limited experimental data, easily applicable. Therefore, if the method "A" is used, all cables installation conditions are to be clearly detailed and submitted, for all cable laying considerations.

11.9.2 The current carrying capacity for continuous service of cables given in Tab 7 to Tab 10 is based on the maximum permissible service temperature of the conductor also indicated therein and on an ambient temperature of 45°C.

11.9.3 The current carrying capacity given in [11.9.2] is applicable, with rough approximation, to all types of protective covering (e.g. both armoured and non-armoured cables).

11.9.4 Values other than those shown in Tab 7 to Tab 10 may be accepted provided they are determined on the basis of calculation methods or experimental values approved by the Society.

11.9.5 When the actual ambient temperature obviously differs from 45°C, the correction factors shown in Tab 11 may be applied to the current carrying capacity in Tab 7 to Tab 10.

11.9.6 Where more than six cables are bunched together in such a way that there is an absence of free air circulating around them, and the cables can be expected to be under full load simultaneously, a correction factor of 0,85 is to be applied.

11.9.7 Where a cable is intended to supply a short-time load for 1/2-hour or 1-hour service, the current carrying capacity obtained from Tab 7 to Tab 10 may be increased by applying the corresponding correction factors given in Tab 12.

In no case is a period shorter than 1/2-hour to be used, whatever the effective period of operation.

11.9.8 For supply cables to single services for intermittent loads (e.g. cargo winches or machinery space cranes), the current carrying capacity obtained from Tab 7 to Tab 10 may be increased by applying the correction factors given in Tab 13.

The correction factors are calculated with rough approximation for periods of 10 minutes, of which 4 minutes with a constant load and 6 minutes without load.

Table 6 : Current carrying capacity, in A, in continuous service for cables based on maximum conductor operating temperature of 70°C (ambient temperature 45°C)

Nominal section (mm²)	Number of conductors					
	1		2		3 or 4	
1,5	15		13		11	
2,5	21		18		15	
4	29		25		20	
6	37		31		26	
10	51		43		36	
16	68		58		48	
25	90		77		63	
35	111		94		78	
50	138		117		97	
70	171		145		120	
95	207		176		145	
120	239		203		167	
150	275		234		193	
185	313		266		219	
240	369		314		258	
300	424		360		297	
	d.c.	a.c.	d.c.	a.c.	d.c.	a.c.
400	500	490	425	417	350	343
500	580	550	493	468	406	385
630	670	610	570	519	469	427

Table 7 : Current carrying capacity, in A, in continuous service for cables based on maximum conductor operating temperature of 60°C (ambient temperature 45°C)

Nominal section (mm²)	Number of conductors					
	1		2		3 or 4	
1,5	10		9		7	
2,5	17		14		12	
4	23		20		16	
6	29		25		20	
10	40		34		28	
16	54		46		38	
25	71		60		50	
35	88		75		62	
50	110		94		77	
70	135		115		95	
95	164		139		115	
120	189		161		132	
150	218		185		153	
185	248		211		174	
240	292		248		204	
300	336		286		235	
	d.c.	a.c.	d.c.	a.c.	d.c.	a.c.
400	390	380	332	323	273	266
500	450	430	383	366	315	301
630	520	470	442	400	364	329

Table 8 : Current carrying capacity, in A, in continuous service for cables based on maximum conductor operating temperature of 85°C (ambient temperature 45°C)

Nominal section (mm²)	Number of conductors					
	1		2		3 or 4	
1,5	21		18		15	
2,5	28		24		20	
4	38		32		27	
6	49		42		34	
10	67		57		47	
16	91		77		64	
25	120		102		84	
35	148		126		104	
50	184		156		129	
70	228		194		160	
95	276		235		193	
120	319		271		223	
150	367		312		257	
185	418		355		293	
240	492		418		344	
300	565		480		396	
	d.c.	a.c.	d.c.	a.c.	d.c.	a.c.
400	650	630	553	536	455	441
500	740	680	629	578	518	476
630	840	740	714	629	588	518

Table 9 : Current carrying capacity, in A, in continuous service for cables based on maximum conductor operating temperature of 90°C (ambient temperature 45°C)

Nominal section (mm²)	Number of conductors					
	1		2		3 or 4	
1,5	23		20		16	
2,5	30		26		21	
4	40		34		28	
6	52		44		36	
10	72		61		50	
16	96		82		67	
25	127		108		89	
35	157		133		110	
50	196		167		137	
70	242		206		169	
95	293		249		205	
120	339		288		237	
150	389		331		272	
185	444		377		311	
240	522		444		365	
300	601		511		421	
	d.c.	a.c.	d.c.	a.c.	d.c.	a.c.
400	690	670	587	570	483	469
500	780	720	663	612	546	504
630	890	780	757	663	623	546

Table 10 : Current carrying capacity, in A, in continuous service for cables based on maximum conductor operating temperature of 95°C (ambient temperature 45°C)

Nominal section (mm²)	Number of conductors					
	1		2		3 or 4	
1,5	26		22		18	
2,5	32		27		22	
4	43		37		30	
6	55		47		39	
10	76		65		53	
16	102		87		71	
25	135		115		95	
35	166		141		116	
50	208		177		146	
70	256		218		179	
95	310		264		217	
120	359		305		251	
150	412		350		288	
185	470		400		329	
240	553		470		387	
300	636		541		445	
	d.c.	a.c.	d.c.	a.c.	d.c.	a.c.
400	760	725	646	616	532	508
500	875	810	744	689	612	567
630	1010	900	859	765	707	630

Table 11 : Correction factors for various ambient air temperatures

Maximum conductor temperature (°C)	Correction factors for ambient air temperature of:										
	35°C	40°C	45°C	50°C	55°C	60°C	65°C	70°C	75°C	80°C	85°C
60	1,29	1,15	1,00	0,82	–	–	–	–	–	–	–
65	1,22	1,12	1,00	0,87	0,71	–	–	–	–	–	–
70	1,18	1,10	1,00	0,89	0,77	0,63	–	–	–	–	–
75	1,15	1,08	1,00	0,91	0,82	0,71	0,58	–	–	–	–
80	1,13	1,07	1,00	0,93	0,85	0,76	0,65	0,53	–	–	–
85	1,12	1,06	1,00	0,94	0,87	0,79	0,71	0,61	0,50	–	–
90	1,10	1,05	1,00	0,94	0,88	0,82	0,74	0,67	0,58	0,47	–
95	1,10	1,05	1,00	0,95	0,89	0,84	0,77	0,71	0,63	0,55	0,45

Table 12 : Correction factors for short-time loads

Sum of nominal cross-sectional areas of all conductors, in mm²				Correction factor
1/2-hour service		1-hour service		
Cables with metallic sheath and armoured cables	Cables with non-metallic sheath and non-armoured cables	Cables with metallic sheath and armoured cables	Cables with non-metallic sheath and non-armoured cables	
up to 20	up to 75	up to 80	up to 230	1,06
21 - 41	76 - 125	81 - 170	231 - 400	1,10
41 - 65	126 - 180	171 - 250	401 - 600	1,15
66 - 95	181 - 250	251 - 430	601 - 800	1,20
96 - 135	251 - 320	431 - 600	–	1,25
136 - 180	321 - 400	601 - 800	–	1,30
181 - 235	401 - 500	–	–	1,35
236 - 285	501 - 600	–	–	1,40
286 - 350	–	–	–	1,45

11.9.9 Parallel connection of cables

The current carrying capacity of cables connected in parallel is the sum of the current ratings of all parallel conductors but the cables must have equal impedance, equal cross-section, equal maximum permissible conductor temperatures and follow substantially identical routing or be installed in close proximity. Connections in parallel are only permitted for cross-sections of 10 mm² or above. When equal impedance can not be assured, a correction factor of 0,9 is to be applied to the current carrying capacity.

11.10 Minimum nominal cross-sectional area of conductors

11.10.1 In general the minimum allowable conductor cross-sectional areas are those given in Tab 14.

11.10.2 The nominal cross-sectional area of the neutral conductor in three-phase distribution systems is to be equal to at least 50% of the cross-sectional area of the phases, unless the latter is less than or equal to 16 mm². In such case the cross-sectional area of the neutral conductor is to be equal to that of the phase.

Table 13 : Correction factors for intermittent service

Sum of nominal cross-sectional areas of all conductors, in mm²		Correction factor
Cables with metallic sheath and armoured cables	Cables without metallic sheath and non-armoured cables	
	$S \leq 5$	1,10
	$5 < S \leq 8$	1,15
	$8 < S \leq 16$	1,20
$S \leq 4$	$16 < S \leq 25$	1,25
$4 < S \leq 7$	$25 < S \leq 42$	1,30
$7 < S \leq 17$	$42 < S \leq 72$	1,35
$17 < S \leq 42$	$72 < S \leq 140$	1,40
$42 < S \leq 110$	$140 < S$	1,45
$110 < S$	–	1,50

Table 14 : Minimum nominal cross-sectional areas

Service	Nominal cross-sectional areas (mm^2)	
	External wiring	Internal wiring
Power, heating and lighting system	1,0	1,0
Control circuits for power plant	1,0	1,0
Control circuits other than those for power plant	0,75	0,5
Control circuits for telecommunications, measurements, alarms	0,5	0,2
Telephone and bell equipment, not required for the safety of the unit or crew calls	0,2	0,1
Bus and data cables	0,2	0,1

11.10.3 For the nominal cross-sectional area of:
- earthing conductors, see Ch 2, Sec 12, [2.3]
- earthing connections for distribution systems, see Ch 2, Sec 12, [2.5]
- neutral connections for three-phase systems, see Ch 2, Sec 8, [1.2.4].

11.11 Choice of cables

11.11.1 The rated voltage of any cable is to be not lower than the nominal voltage of the circuit for which it is used.

11.11.2 The nominal cross-sectional area of each cable is to be sufficient to satisfy the following conditions with reference to the maximum anticipated ambient temperature:
- the current carrying capacity is to be not less than the highest continuous load carried by the cable
- the voltage drop in the circuit, by full load on this circuit, is not to exceed the specified limits
- the cross-sectional area calculated on the basis of the above is to be such that the temperature increases which may be caused by overcurrents or starting transients do not damage the insulation.

11.11.3 The highest continuous load carried by a cable is to be calculated on the basis of the power requirements and of the diversity factor of the loads and machines supplied through that cable.

11.11.4 When the conductors are carrying the maximum nominal service current, the voltage drop from the main or emergency switchboard busbars to any point in the installation is not to exceed 6% of the nominal voltage.

For battery circuits with supply voltage less than 55 V, this value may be increased to 10%.

For the circuits of navigation lights, the voltage drop is not to exceed 5% of the rated voltage under normal conditions.

Section 4 Rotating Machines

1 Constructional requirements for generators and motors

1.1 Mechanical construction

1.1.1 Materials and construction of electrical machines are to conform to the relevant requirements of Ch 2, Sec 2, [4] and Ch 2, Sec 2, [5].

1.1.2 Shafts are to be made of material complying with the provisions of NR216, Chapter 5 or, where rolled products are allowed in place of forgings, with those of NR216, Chapter 3.

1.1.3 Where welded parts are foreseen on shafts and rotors, the provisions of NR216, Chapter 12 apply.

1.1.4 Sleeve bearings are to be efficiently and automatically lubricated at all running speeds.

Provision is to be made for preventing the lubricant from gaining access to windings or other insulated or bare current carrying parts.

1.1.5 Each self-lubricated sleeve bearing shall be fitted with an inspection lid and means for the visual indication of oil level or the use of an oil-gauge. This requirement does not apply to machines under 100 kW (d.c.) or 100 kVA (a.c.).

1.1.6 Means are to be provided to prevent bearings from being damaged by the flow of currents circulating between them and the shaft. According to the manufacturer's requirements, electrical insulation of at least one bearing is to be considered.

1.1.7 For surface-cooled machines with an external fan installed on the open deck, adequate protection of the fan against icing is to be provided.

1.1.8 When liquid cooling is used, the coolers are to be so arranged as to avoid entry of water into the machine, whether by leakage or condensation in the heat exchanger, and provision is to be made for the detection of leakage.

1.1.9 Rotating machines whose ventilation or lubrication system efficiency depends on the direction of rotation are to be provided with a warning plate.

1.2 Sliprings, commutators and brushes

1.2.1 Sliprings and commutators with their brushgear are to be so constructed that undue arcing is avoided under all normal load conditions.

1.2.2 The working position of brushgear is to be clearly and permanently marked.

1.2.3 Sliprings, commutators and brushgear are to be readily accessible for inspection, repairs and maintenance.

1.3 Terminal connectors

1.3.1 Suitable, fixed terminal connectors are to be provided in an accessible position for connection of the external cables.

1.3.2 All terminal connectors are to be clearly identified with reference to a diagram.

1.3.3 The degree of protection of terminal boxes is to be adequate to that of the machine.

1.4 Electrical insulation

1.4.1 Insulating materials for windings and other current carrying parts are to comply with the requirements of Ch 2, Sec 2, [4.2] and Ch 2, Sec 2, [4.3].

2 Special requirements for generators

2.1 Prime movers, speed governors and overspeed protection

2.1.1 Prime movers for generators are to comply with the relevant requirements of Ch 1, Sec 2, [2.7.5] or Ch 1, Sec 5, [2.5.2].

2.1.2 When generators are to operate in parallel, the characteristics of speed governors are to comply with the provisions of [2.2].

2.2 A.c. generators

2.2.1 Alternators are to be so constructed that, when started up, they take up the voltage without the aid of an external electrical power source.

Where these provisions are not complied with, the external electrical power source is to be constituted by a battery installation in accordance with the requirements for electrical starting systems of auxiliary machinery (see Ch 1, Sec 2, [3.1.2]).

2.2.2 The voltage wave form is to be approximately sinusoidal, with a maximum deviation from the sinusoidal fundamental curve of 5% of the peak value.

2.2.3 Each alternator is to be provided with automatic means of voltage regulation.

2.2.4 When a.c. generators are operated in parallel, the reactive loads of the individual generating sets are not to differ from their proportionate share of the total reactive load by more than 10% of the rated reactive power of the largest machine, or 25% of that of the smallest machine, whichever is the lesser.

3 Testing of rotating machines

3.1 General

3.1.1 All machines are to be tested by the manufacturers.

3.1.2 The manufacturer is to issue a test report giving, inter alia, information concerning the construction, type, serial number, insulation class and all other technical data relevant to the machine, as well as the results of the tests required.

Such test reports are to be provided to the Society, for machines for essential services. For other machines, these test reports are to be made available upon request of the Society.

3.1.3 All tests are to be carried out according to IEC Publication 60092-301.

3.1.4 All machines of 100 KW and over, intended for essential services are to be surveyed by the Society during testing and, if appropriate, during manufacturing.

Note 1: An alternative inspection scheme may be agreed by the Society with the manufacturer whereby the attendance of the Surveyor will not be required as indicated above.

3.2 Shaft material

3.2.1 Shaft material for electric propulsion motors and for main engine driven generators where the shaft is part of the propulsion shafting is to be certified by the Society.

3.2.2 Shaft material for other machines is to be in accordance with recognised international or national standard.

3.3 Tests

3.3.1 Type test are to be carried out on a prototype machine or on the first batch of machines, and routine tests carried out on subsequent machines in accordance with Tab 1.

3.3.2 Where the test procedure is not specified, the requirements of IEC 60034-1 apply.

Table 1 : Tests to be carried out on electrical rotating machines

No.	Tests	A.c. generators		Motors	
		Type test **(1)**	Routine test **(2)**	Type test **(1)**	Routine test **(2)**
1	Examination of the technical documentation, as appropriate, and visual inspection	X	X	X	X
2	Insulation resistance measurement	X	X	X	X
3	Winding resistance measurement	X	X	X	X
4	Verification of the voltage regulation system	X	X **(3)**		
5	Rated load test and temperature rise measurement	X		X	
6	Overcurrent test	X			
7	Overtorque test			X	

(1) Type test on prototype machine or test on at least the first batch of machines.
(2) The reports of machines routine tested are to contain the manufacturer's serial number of the machine which has been type tested and the test result.
(3) Only functional test of the voltage regulator system.
(4) Verification of steady short-circuit condition applies to synchronous machines only.

No.	Tests	A.c. generators		Motors	
		Type test **(1)**	Routine test **(2)**	Type test **(1)**	Routine test **(2)**
8	Verification of steady short-circuit conditions **(4)**	X			
9	Overspeed test	X	X	X	
10	Dielectric strength test	X	X	X	X
11	No load test	X	X	X	X
12	Verification of degree of protection	X		X	
13	Verification of bearings	X	X	X	X

(1) Type test on prototype machine or test on at least the first batch of machines.
(2) The reports of machines routine tested are to contain the manufacturer's serial number of the machine which has been type tested and the test result.
(3) Only functional test of the voltage regulator system.
(4) Verification of steady short-circuit condition applies to synchronous machines only.

4 Description of test

4.1 Technical documentation and visual inspection

4.1.1 Technical documentation of machines rated at 100 kW (kVA) and over are to be available for examination by the Surveyor.

4.1.2 A visual inspection of the machine is to be made to ensure, as far as practicable, that it complies with the technical documentation.

4.2 Insulation resistance measurement

4.2.1 Immediately after the high voltage tests the insulation resistances are to be measured using a direct current insulation tester between:

a) all current carrying parts connected together and earth

b) all current carrying parts of different polarity or phase, where both ends of each polarity or phase are individually accessible.

The minimum values of test voltages and corresponding insulation resistances are given in Tab 2. The insulation resistance is to be measured close to the operating temperature, or an appropriate method of calculation is to be used.

Table 2 : Minimum insulation resistance

Rated voltage Un V	Minimum test voltage V	Minimum insulation resistance MΩ
Un = 250	2 Un	1
250 < Un ≤ 1000	500	1
1000 < Un ≤ 7200	1000	Un/1000 + 1
7200 < Un ≤ 15000	5000	Un/1000 + 1

4.3 Winding resistance measurement

4.3.1 The resistances of the machine windings are to be measured and recorded using an appropriate bridge method or voltage and current method.

4.4 Verification of the voltage regulation

4.4.1 The alternating current generator, together with its voltage regulation system, is to be verified in such a way that, at all loads from no load running to full load, the rated voltage at the rated power factor is maintained under steady conditions within ± 2,5%. These limits may be increased to ± 3,5% for emergency sets.

4.4.2 When the generator is driven at rated speed, giving its rated voltage, and is subjected to a sudden change of symmetrical load within the limits of specified current and power factor, the voltage is not to fall below 85% nor exceed 120% of the rated voltage.

4.4.3 The voltage of the generator is then to be restored to within plus or minus 3% of the rated voltage for the main generator sets in not more than 1,5 s. For emergency sets, these values may be increased to plus or minus 4% in not more than 5 s, respectively.

4.4.4 In the absence of precise information concerning the maximum values of the sudden loads, the following conditions may be assumed: 60% of the rated current with a power factor of between 0,4 lagging and zero to be suddenly switched on with the generator running at no load, and then switched off after steady - state conditions have been reached.

4.5 Rated load test and temperature rise measurements

4.5.1 The temperature rises are to be measured at the rated out-put, voltage and frequency and for the duty for which the machine is rated and marked in accordance with the testing methods specified in IEC Publication 60034-1, or by means of a combination of other tests (see indirect methods in Ch 2, App 1 for synchronous machines and in Ch 2, App 2 for induction machines).

4.5.2 The limits of temperature rise above ambient air temperature of 45°C for air-cooled machines are those given in Tab 3.

Table 3 : Temperature rise limits for air-cooled machines based on an ambient temperature of 45°C

No.	Part of machines	Method of measurement of temperature **(1)**	Temperature rise °C by class of insulation				
			A	E	B	F	H
1	a) a.c. windings of machines having outputs of 5000 kW (or kVA) or more	R ETD	55 60	– –	75 80	95 100	120 125
	b) a.c. windings of machines having outputs of less than 5000 kW (or kVA)	R ETD	55 60	70 –	75 85	100 105	120 125
2	Windings of armatures with commutators	T R	45 55	60 70	65 75	80 100	100 120
3	Field windings of a.c. and d.c machines having d.c. excitation other than those in item 4	T R	45 55	60 70	65 75	80 100	100 120
4	a) Field windings of synchronous machines with cylindrical rotors having d.c. excitation	R	–	–	85	105	130
	b) Stationary field windings of d.c. machines having more than one layer	T R ETD	45 55 –	60 70 –	65 75 85	80 100 105	100 120 130
	c) Low resistance field windings of more than one layer, and compensating windings	T, R **(2)**	55	70	75	95	120
	d) Single-layer windings with exposed bare surfaces	T, R **(2)**	60	75	85	105	130
5	Permanently short-circuited, insulated windings	T	55	70	75	95	120
6	Permanently short-circuited uninsulated windings	The temperature rise of these parts is in no case to reach such a value that there is a risk of damage to any insulating or other material on adjacent parts					
7	Magnetic core and other parts not in contact with windings						
8	Magnetic core and other parts in contact with windings	T	55	70	75	95	120
9	Commutators and sliprings, open or enclosed **(3)**	T	55	65	75	85	95

(1) T : Measurement by the thermometer method
R : Measurement by the resistance method
ETD : Measurement by embedded temperature detectors.
(2) Temperature rise measurement is to use the resistance method R whenever practicable.
(3) If commutators and sliprings are adjacent to windings with a lower insulation class, the temperature rises for this class apply.

4.6 Overcurrent test - Overtorque test

4.6.1 Overcurrent test is to be carried out as a type test for generators, as required in IEC Publication 60034-1. The overcurrent test is the proof of current capability of the windings, wires, connections etc. of each machine.

AC generators are to be capable of withstanding a current equal to 1,5 times the rated current for not less than 30 s.

Note 1: This test may be performed in conjunction with the short-circuit testing, provided the electrical input energy to the machine is not less than that required for the above overload capability.

4.6.2 Overtorque test is to be carried out as a type test for motors, as required in IEC Publication 60034-1. The overtorque test is a proof of momentary excess torque capability of the machine.

General purpose rotating machines are to be designed considering the following excess torque:

- AC induction motors and DC motors: 60% in excess of the torque that corresponds to the rating, for 15 s, without stalling or abrupt change in speed (under gradual increase of torque), the voltage and frequency being maintained at their rated value
- AC synchronous motors with salient poles: 50% in excess of the torque that corresponds to the rating, for 15 s, without falling out of synchronism, the voltage, frequency and excitation current being maintained at their rated values
- AC synchronous motors with wound (induction) or cylindrical rotors: 35% in excess of the torque that corresponds to the rating, for 15 s, without losing synchronism, the voltage and frequency being maintained at their rated value.

Note 1: The overtorque test can be replaced at a routine test by an overcurrent test.

Note 2: The overtorque test may be omitted for electrical propulsion motor supplied by converter if an overload protection / limitation is provided inside the converter. Justifications are to be transmitted by the converter manufacturer.

4.6.3 In the case of machines for special uses (e.g. for windlasses), overload values other than the above may be considered.

4.7 Verification of the steady short circuit current

4.7.1 It is to be verified that under steady state short-circuit conditions, the generator with its voltage regulating system is capable of maintaining, without sustaining any damage, a current of at least three times the rated current for a duration of at least 2 s or, where precise data is available, for a duration of any time delay which may be fitted in a tripping device for discrimination purposes.

4.8 Overspeed test

4.8.1 Machines are to withstand the overspeed test as specified in IEC Publication 60034-1.

4.9 Dielectric strength test

4.9.1 New and completed rotating machines are to withstand a dielectric test as specified in IEC Publication 60034-1.

4.9.2 For high voltage machines an impulse test is to be carried out on the coils according to Ch 2, Sec 13.

4.9.3 When it is necessary to perform an additional high voltage test, this is to be carried out after any further drying, with a test voltage of 80% of that specified in IEC Publication 60034-1.

4.9.4 Completely rewound windings of used machines are to be tested with the full test voltage applied in the case of new machines.

4.9.5 Partially rewound windings are to be tested at 75% of the test voltage required for new machines. Prior to the test, the old part of the winding is to be carefully cleaned and dried.

4.9.6 Following cleaning and drying, overhauled machines are to be subjected to a test at a voltage equal to 1,5 times the rated voltage, with a minimum of 500 V if the rated voltage is less than 100 V, and with a minimum of 1000 V if the rated voltage is equal to or greater than 100 V.

4.9.7 A repetition of the high voltage test for groups of machines and apparatus is to be avoided if possible, but if a test on an assembled group of several pieces of new apparatus, each of which has previously passed its high voltage test, is per-formed, the test voltage to be applied to such assembled group is 80% of the lowest test voltage appropriate for any part of the group.

Note 1: For windings of one or more machines connected together electrically, the voltage to be considered is the maximum voltage that occurs in relation to earth.

4.10 No load test

4.10.1 Machines are to be operated at no load and rated speed whilst being supplied at rated voltage and frequency as a motor while generators are to be driven by a suitable means and excited to give rated terminal voltage.

During the running test, the vibration of the machine and operation of the bearing lubrication system, if appropriate, are to be checked.

4.11 Verification of degree of protection

4.11.1 As specified in IEC Publication 60034-5.

4.12 Verification of bearings

4.12.1 Upon completion of the above tests, machines which have sleeve bearings are to be opened upon request for examination by the Surveyor, to establish that the shaft is correctly seated in the bearing shells.

Section 5 Transformers

1 Constructional requirements

1.1 General

1.1.1 The provisions of this clause are applicable to all transformers used for power, lighting and static converters and, where appropriate, to starting transformers, static balancers, saturable reactors and transductors for use in offshore units, including single-phase transformers rated at less than 1 kVA, and three-phase transformers rated at less than 5 kVA, unless special requirements are specified. All equipment referred is to comply with the relevant requirements of IEC 60076 series, as well as with the additional requirements given in these Rules.

Transformers for use with converters, invertors, variable speed drives, etc., are to be so designed as to be suitable for use on non-sinusoidal supplies and/or variable frequency supplies, and shall comply with IEC 60146-1-3.

1.2 Construction

1.2.1 When installed indoors, transformers are preferably to be of the dry, air-cooled type.

Note 1: In some countries oil-filled equipment is not permitted on offshore units.

1.2.2 Transformers, except those for motor starting, are to be double wound (two or more separate windings).

1.2.3 Where forced cooling is used, it shall be possible to operate at reduced power on failure of a pump or a fan. Consideration is to be given to the provision of suitable indicating and alarm facilities.

1.2.4 Liquid-immersed type transformers may be used provided that:

- The liquid is non-toxic and of a type which does not readily support combustion.
- They are preferably be hermetically sealed. If of the conservator type, they are to be so designed that they operate without risk of spilling liquid under all conditions, with the offshore units inclined from the normal as specified in Ch 1, Sec 1, Tab 1 and Ch 1, Sec 1, Tab 2 and Ch 1, Sec 1, Tab 3. If provision is made for breathing, a suitable dehydrator is to be provided.
- Over-temperature alarm and gas-actuated protection devices are installed.
- Drip trays or other suitable arrangements for collecting the liquid from leakages are provided.
- A liquid gauge indicating the normal liquid level range is fitted.

1.2.5 Transformers are to have enclosures with a degree of protection in accordance with Ch 2, Sec 3, Tab 3.

1.3 Terminals

1.3.1 Suitable fixed terminal connections are to be provided in an accessible position with sufficient space for convenient connection of the external cables.

1.3.2 Terminals are to be clearly identified.

1.4 Voltage variation, short-circuit conditions and parallel operation

1.4.1 Under resistive load (cos Φ = 1), the voltage drop from no load to full load is not to exceed 2,5%.

For transformers with a power lower than 5 kVA per phase, this voltage drop is not to exceed 5%.

An exception is made for special transformers, such as starting and instrument transformers, for which a different voltage variation may be considered.

1.4.2 In determining the voltage ratio and the impedance voltage of transformers, account is to be taken of the total permitted voltage drop from the main switchboard's busbars to the consumers (see Ch 2, Sec 2).

1.4.3 Transformers are to be constructed to withstand, without damage, the thermal and mechanical effects of a secondary terminal short-circuit for 2 s, with rated primary voltage and frequency.

For transformers of 1 MVA and over, this is to be justified with appropriate tests or documentation.

1.4.4 When transformers are so arranged that their secondary windings may be connected in parallel, their winding connections are to be compatible, their rated voltage ratios are to be equal (with tolerances allowed) and their short-circuit impedance values, expressed as a percentage, are to have a ratio within 0,9 to 1,1.

When transformers are intended for operation in parallel, the rated power of the smallest transformer in the group is to be not less than half of the rated power of the largest transformer in the group.

1.5 Electrical insulation and temperature rise

1.5.1 Insulating materials for windings and other current carrying parts are to comply with the requirements of Ch 2, Sec 2.

1.5.2 All windings of air-cooled transformers are to be suitably treated to resist moisture, air salt mist and oil vapours.

1.5.3 The permissible limits of temperature rise with an ambient air temperature of 45°C for (natural or forced) air-cooled transformers are given in Tab 1. The temperature rises shown for windings refer to measurement by the resistance method while those for the core refer to the thermometer method.

1.5.4 For dry-type transformers cooled with an external liquid cooling system, the permissible limits of temperature rise with a sea water temperature of 32°C are 13°C higher than those specified in Tab 1.

1.5.5 For liquid-cooled transformers, the following temperature rises measured by the resistance method apply:

- 55°C where the fluid is cooled by air
- 68°C where the fluid is cooled by water.

Table 1 : Temperature rise limits for transformers

No.	Part of machine	Temperature rise by class of insulation °C				
		A	E	B	F	H
1	Windings	55	70	75	95	120
2	Cores and other parts: a) in contact with the windings b) not in contact with the windings	a) the same values as for the windings b) in no case is the temperature to reach values such as to damage either the core itself or other adjacent parts or materials				

2 Testing

2.1 General

2.1.1 Transformers intended for essential services are to be subject to the tests stated in [2.2].

2.1.2 The manufacturer is to issue a test report giving, inter alia, information concerning the construction, type, serial number, insulation class and all other technical data relevant to the transformer, as well as the results of the tests required.

Such test reports are to be made available to the Society.

2.1.3 In the case of transformers which are completely identical in rating and in all other constructional details, it will be acceptable for the temperature rise test to be performed on only one transformer.

The results of this test and the serial number of the tested transformer are to be inserted in the test reports for the other transformers.

2.1.4 Where the test procedure is not specified, the requirements of IEC 60076-1 apply.

2.1.5 The tests and, if appropriate, manufacture of transformers of 100 kVA and over (60 kVA when single phase) intended for essential services are to be attended by a Surveyor of the Society.

Transformers of 5 kVA up to the limit specified above are approved on a case by case basis, at the discretion of the Society, subject to the submission of adequate documentation and routine tests.

2.2 Tests on transformers

2.2.1 Tests to be carried out on transformers are specified in Tab 2.

2.3 Insulation tests

2.3.1 Transformers are to be subjected to a high voltage test in accordance with the requirements of IEC 60076-3.

2.3.2 The test voltage is to be applied between each winding under test and the other windings not under test, core and enclosure all connected together.

Single-phase transformers for use in a polyphase group are to be tested in accordance with the requirements applicable to that group.

2.3.3 The r.m.s. value of the test voltage is to be equal to 2 U + 1000 V, with a minimum of 2500 V, where U is the rated voltage of the winding. The full voltage is to be maintained for 1 minute.

2.3.4 Partially rewound windings are to be tested at 80% of the test voltage required for new machines.

2.3.5 The insulation resistance of a new, clean and dry transformer, measured after the temperature rise test has been carried out (at or near operating temperature) at a voltage equal to 500 V d.c., is to be not less than 5 MΩ.

2.3.6 Transformers are to be subjected to an induced voltage insulation test by applying to the terminals of the winding under test a voltage equal to twice the rated voltage. The duration of the test is to be 60 s for any test frequency fp up to and including twice the rated frequency fn.

If the test frequency exceeds twice the rated frequency, the test time in seconds is to be:

120 fn / fp with a minimum of 15 s.

Table 2 : Tests to be carried out on transformers

No.	Tests	Type test **(1)**	Routine test **(2)**
1	Examination of the technical documentation, as appropriate, and visual inspection **(3)**	X	X
2	Insulation resistance measurement	X	X
3	Measurement of winding resistance	X	X
4	Measurement of voltage ratio and check of phase displacement	X	X
5	Measurement of short-circuit impedance and load loss	X	X
6	Measurement of no-load loss and no load current	X	X
7	High voltage test	X	X
8	Induced voltage test	X	X
9	Temperature-rise measurement	X	

(1) Type test on prototype transformer or test on at least the first batch of transformers.

(2) The certificates of transformers routine tested are to contain the manufacturer's serial number of the transformer which has been type tested and the test result.

(3) A visual examination of the transformer is to be made to ensure, as far as practicable, that it complies with technical documentation: inspection of enclosure, terminations, instrumentation or protection.

Section 6 Semiconductor Converters

1 Constructional requirements

1.1 Construction

1.1.1 Semiconductor converters are generally to comply with the requirements for switchgear assemblies (see Ch 2, Sec 8).

1.1.2 The design of semi-conductor converters is to comply with the requirements of IEC Publication 60146-1-1 with applicable requirements modified to suit marine installations like e.g. environmental requirements stated in Ch 2, Sec 2.

1.1.3 The design of semi-conductor converters for power supply is to comply with the requirements of IEC 62040 series (see Article [2]).

1.1.4 The design of semi-conductor converters for motor drives is to comply with the requirements of IEC 61800 series.

1.1.5 The monitoring and control circuits are generally to comply with the requirements of Part C, Chapter 3.

1.1.6 For liquid-cooled converters the following provisions are to be satisfied:

- liquid is to be non-toxic and of low flammability
- drip trays or other suitable means are to be provided to contain any liquid leakages
- the resistivity of the cooling fluid in direct contact with semiconductor or other current carrying parts is to be monitored and an alarm initiated if the resistivity is outside the specified limits.

1.1.7 Where forced cooling is used, the temperature of the heated cooling medium is to be monitored.

If the temperature exceeds a preset value an alarm is to be given and the shutdown of the converter is to be activated.

1.1.8 Where forced (air or liquid) cooling is provided, it is to be so arranged that the converter cannot be or remain loaded unless effective cooling is maintained.

Alternatively, other effective means of protection against overtemperature may be provided.

1.1.9 Stacks of semiconductor elements, and other equipment such as fuses, or control and firing circuit boards etc., are to be so arranged that they can be removed from equipment without dismantling the complete unit.

1.1.10 Semiconductor converters are to be rated for the required duty having regard to the peak loads, system transient and overvoltage and to be dimensioned so as to withstand the maximum short-circuit currents foreseen at the point of installation for the time necessary to trip the protection of the circuits they supply.

1.2 Protection

1.2.1 Semiconductor elements are to be protected against short-circuit by means of devices suitable for the point of installation in the network.

1.2.2 Overcurrent or overvoltage protection is to be installed to protect the converter. When the semiconductor converter is designed to work as an inverter supplying the network in transient periods, precautions necessary to limit the current are to be taken.

1.2.3 Semiconductor converters are not to cause distortion in the voltage wave form of the power supply at levels exceeding the voltage wave form tolerances at the other user input terminals (see Ch 2, Sec 2, [2.4]).

1.2.4 An alarm is to be provided for tripping of protective devices against overvoltages and overcurrents in electric propulsion converters and for converters for the emergency source of power.

1.3 Parallel operation with other power sources

1.3.1 For converters arranged to operate in parallel with other power sources, load sharing is to be such that under normal operating conditions overloading of any unit does not occur and the combination of paralleled equipment is stable.

1.4 Temperature rise

1.4.1 The permissible limit of temperature rise of the enclosure of the semiconductors is to be assessed on the basis of an ambient air temperature of 45°C or sea water temperature of 32°C for water-cooled elements, taking into account its specified maximum permissible temperature value.

1.4.2 The value of the maximum permissible temperature of the elements at the point where this can be measured (point of reference) is to be stated by the manufacturer.

1.4.3 The value of the mean rated current of the semiconductor element is to be stated by the manufacturer.

1.5 Insulation test

1.5.1 The test procedure is that specified in IEC Publication 60146.

1.5.2 The effective value of the test voltage for the insulation test is to be as shown in Tab 1.

Table 1 : Test voltages for high voltage test on static converters

$\frac{U_m}{\sqrt{2}} = U$ in V **(1)**	Test voltage, in V
$U \le 60$	600
$60 < U \le 90$	900
$90 < U$	2 U + 1000 (at least 2000)
(1) U_m : Highest crest value to be expected between any pair of terminals.	

2 Requirements for uninterruptible power system (UPS) units as alternative and/or transitional power

2.1 Definitions

2.1.1 Uninterruptible power system (UPS)

Combination of converters, switches and energy storage means, for example batteries, constituting a power system for maintaining continuity of load power in case of input power failure (see IEC Publication 62040).

2.1.2 Off line UPS unit

A UPS unit where under normal operation the output load is powered from the bypass line (raw mains) and only transferred to the inverter if the bypass supply fails or goes outside preset limits. This transition will invariably result in a brief (typically 2 to 10 ms) break in the load supply.

2.1.3 Line interactive UPS unit

An off-line UPS unit where the bypass line switch to stored energy power when the input power goes outside the preset voltage and frequency limits.

2.1.4 On line UPS unit

A UPS unit where under normal operation the output load is powered from the inverter, and will therefore continue to operate without break in the event of the supply input failing or going outside preset limits.

2.2 Design and construction

2.2.1 UPS units are to be constructed in accordance with IEC 62040, or an acceptable and relevant national or international standard.

2.2.2 The operation of the UPS is not to depend upon external services.

2.2.3 The type of UPS unit employed, whether off-line, line interactive or on-line, is to be appropriate to the power supply requirements of the connected load equipment.

2.2.4 An external bypass is to be provided.

2.2.5 The UPS unit is to be monitored and audible and visual alarm is to be given in a normally attended location for:

- power supply failure (voltage and frequency) to the connected load
- earth fault
- operation of battery protective device
- when the battery is being discharged
- when the bypass is in operation for on-line UPS units.

2.3 Location

2.3.1 The UPS unit is to be suitably located for use in an emergency.

2.3.2 UPS units utilising valve regulated sealed batteries may be located in compartments with normal electrical equipment, provided the ventilation arrangements are in accordance with the requirements of IEC 62040 or an acceptable and relevant national or international standard.

2.4 Performance

2.4.1 The output power is to be maintained for the duration required for the connected equipment as stated in Ch 2, Sec 3, Tab 2.

2.4.2 No additional circuits are to be connected to the UPS unit without verification that the UPS unit has adequate capacity.

2.4.3 The UPS battery capacity is, at all times, to be capable of supplying the designated loads for the time specified in the regulations.

2.4.4 On restoration of the input power, the rating of the charge unit shall be sufficient to recharge the batteries while maintaining the output supply to the load equipment.

3 Testing

3.1 General

3.1.1 Converters intended for essential services are to be subjected to the tests stated in [3.2].

3.1.2 The manufacturer is to issue a test report giving information on the construction, type, serial number and all technical data relevant to the converter, as well as the results of the tests required.

3.1.3 In the case of converters which are completely identical in rating and in all other constructional details, it will be acceptable for the rated current test and temperature rise measurement stipulated in [3.2] not to be repeated.

3.1.4 The tests and, if appropriate, manufacture of converters of 50 kVA and over intended for essential services are to be attended by a Surveyor of the Society.

3.2 Tests on converters

3.2.1 Converters are to be subjected to tests in accordance with Tab 2.

Type tests are the tests to be carried out on a prototype converter or the first of a batch of converters, and routine tests are the tests to be carried out on subsequent converters of a particular type.

3.2.2 The tests listed in Tab 2 are to be performed in accordance with IEC 60146-1-1. The relevant requirements of IEC 61800-5-1 and of IEC 62040-3 based on the equipment type also apply.

3.2.3 The electronic components of the converters are to be constructed to withstand the tests required in Ch 3, Sec 6.

3.2.4 Final approval of converters is to include complete function tests after installation on board, performed with all unit's systems in operation and in all characteristic load conditions.

Table 2 : Tests to be carried out on static converters

No.	Tests	Type test **(1)**	Routine test **(2)**
1	Examination of the technical documentation, as appropriate, and visual inspection **(3)** including check of earth continuity	X	X
2	Light load function test to verify all basic and auxiliary functions	X	X
3	Rated current test	X	
4	Temperature rise measurement	X	
5	Insulation test (dielectric strength test and insulation resistance measurement)	X	X
6	Protection of the converters in case of failure of forced cooling system	X	X

(1) Type test on prototype converter or test on at least the first batch of converters.
(2) The certificates of converters routine tested are to contain the manufacturer's serial number of the converter which has been type tested and the test result.
(3) A visual examination of the converter is to be made to ensure, as far as practicable, that it complies with technical documentation.

3.3 Additional testing and survey for uninterruptible power system (UPS) units as alternative and/or transitional power

3.3.1 UPS units of 50 kVA and over are to be surveyed by the Society during manufacturing and testing.

3.3.2 Appropriate testing is to be carried out to demonstrate that the UPS unit is suitable for its intended environment. This is expected to include as a minimum the following tests:

- functionality, including operation of alarms
- ventilation rate
- battery capacity.

3.3.3 Where the supply is to be maintained without a break following a power input failure, this is to be verified after installation by practical test.

Section 7 Storage Batteries and Chargers

1 Constructional requirements for batteries

1.1 General

1.1.1 The requirements of this Section apply to permanently installed storage batteries (not to portable batteries).

1.1.2 Storage batteries may be of the lead-acid or nickel-alkaline type, due consideration being given to the suitability for any specific application.

Other types of storage batteries of satisfactorily proven design (e.g. silver/zinc) may be accepted provided they are suitable for shipboard use to the satisfaction of the Society.

1.1.3 Cells are to be assembled in suitable crates or trays equipped with handles for convenient lifting.

1.2 Vented batteries

1.2.1 Vented batteries are those in which the electrolyte can be replaced and freely releases gas during periods of charge and overcharge.

1.2.2 Vented batteries are to be constructed to withstand the movement of the unit and the atmosphere (salt mist, oil etc.) to which they may be exposed.

1.2.3 Battery cells are to be so constructed as to prevent spilling of electrolyte at any inclination of the battery up to 40° from the vertical.

1.2.4 It is to be possible to check the electrolyte level and the ph.

1.3 Valve-regulated sealed batteries

1.3.1 Valve-regulated sealed batteries are batteries whose cells are closed under normal conditions but which have an arrangement which allows the escape of gas if the internal pressure exceeds a predetermined value. The cells cannot normally receive addition to the electrolyte.

Note 1: The cells of batteries which are marketed as “sealed” or “maintenance free” are fitted with a pressure relief valve as a safety precaution to enable uncombined gas to be vented to the atmosphere; they should more properly be referred to as valve-regulated sealed batteries. In some circumstances the quantity of gas vented can be up to 25% of the equivalent vented design. The design is to take into consideration provision for proper ventilation.

1.3.2 Cell design is to minimise risks of release of gas under normal and abnormal conditions.

1.4 Tests on batteries

1.4.1 The battery autonomy is to be verified on board in accordance with the operating conditions.

1.5 Battery maintenance

1.5.1 Where batteries are fitted for use for essential and emergency services, a schedule of such batteries is to be compiled and maintained. The schedule, which is to be reviewed by the Society, is to include at least the following information regarding the battery(ies):

- maintenance/replacement cycle dates
- date(s) of last maintenance and/or replacement
- for replacement batteries in storage, the date of manufacture and shelf life.

Note 1: Shelf life is the duration of storage under specified conditions at the end of which a battery retains the ability to give a specified performance.

1.5.2 Procedures are to be put in place to ensure that, where batteries are replaced, they are of an equivalent performance type.

1.5.3 Where vented type batteries replace valve-regulated sealed types, it is to be ensured that there is adequate ventilation and that the Society's requirements relevant to the location and installation of vented types batteries are complied with.

1.5.4 Details of the schedule and of the procedures are to be included in the unit's safety management system and be integrated into the unit's operational maintenance routine, as appropriate, to be verified by the Society's surveyor.

2 Constructional requirements for chargers

2.1 Characteristics

2.1.1 Chargers are to be adequate for the batteries for which they are intended and provided with a voltage regulator.

2.1.2 In the absence of indications regarding its operation, the battery charger is to be such that the completely discharged battery can be recharged to 80% capacity within a period of 10 hours without exceeding the maximum permissible charging current. A charging rate other than the above (e.g. fully charged within 6 hours for batteries for starting of motors) may be required in relation to the use of the battery.

2.1.3 For floating service or for any other condition where the load is connected to the battery while it is on charge, the maximum battery voltage is not to exceed the safe value of any connected apparatus.

Note 1: Consideration is to be given to the temperature variation of the batteries.

2.1.4 The battery charger is to be designed so that the charging current is set within the maximum current allowed by the manufacturer when the battery is discharged and the floating current to keep the battery fully charged.

2.1.5 Trickle charging to neutralise internal losses is to be provided. An indication is to be provided to indicate a charging voltage being present at the charging unit.

2.1.6 Protection against reversal of the charging current is to be provided.

2.1.7 Battery chargers are to be constructed to simplify maintenance operation. Indications are to be provided to visualise the proper operation of the charger and for troubleshooting.

2.2 Tests on chargers

2.2.1 Battery chargers are to be subjected to tests in accordance with Tab 1.

Type tests are the tests to be carried out on a prototype charger or the first of a batch of chargers, and routine tests are the tests to be carried out on subsequent chargers of a particular type.

2.2.2 The electronic components of the battery chargers are to be constructed to withstand the tests required in Ch 3, Sec 6.

2.2.3 The tests of battery chargers of 5 kW and over intended for essential services are to be attended by a Surveyor of the Society.

Table 1 : Tests to be carried out on battery chargers

No.	Tests	Type test **(1)**	Routine test **(2)**
1	Examination of the technical documentation, as appropriate, and visual inspection **(3)** including check of earth continuity	X	X
2	Functional tests (current and voltage regulation, quick, slow, floating charge, alarms)	X	X
3	Temperature rise measurement	X	
4	Insulation test (dielectric strength test and insulation resistance measurement)	X	X

(1) Type test on prototype battery charger or test on at least the first batch of battery chargers.

(2) The certificates of battery chargers routine tested are to contain the manufacturer's serial number of the battery charger which has been type tested and the test result.

(3) A visual examination of the battery charger is to be made to ensure, as far as practicable, that it complies with technical documentation.

Section 8 Switchgear and Controlgear Assemblies

1 Constructional requirements for main and emergency switchboards

1.1 Construction

1.1.1 Construction is to be in accordance with IEC Publication 60092-302.

1.1.2 Where the framework, panels and doors of the enclosure are of steel, suitable measures are to be taken to prevent overheating due to the possible circulation of eddy currents.

1.1.3 Insulating material for panels and other elements of the switchboard is at least to be moisture-resistant and flame-retardant.

1.1.4 Switchboards are to be of dead front type, with enclosure protection according to Ch 2, Sec 3, Tab 3.

1.1.5 Switchboards are to be provided with insulated handrails or handles fitted in an appropriate position at the front of the switchboard. Where access to the rear is necessary for operational or maintenance purposes, an insulated handrail or insulated handles are to be fitted.

1.1.6 Where the aggregate capacity of generators connected to the main busbars exceeds 100 kVA, a separate cubicle for each generator is to be arranged with flame-retardant partitions between the different cubicles. Similar partitions are to be provided between the generator cubicles and outgoing circuits.

1.1.7 Instruments, handles or push-buttons for switchgear operation are to be placed on the front of the switchboard. All other parts which require operation are to be accessible and so placed that the risk of accidental touching of live parts, or accidental making of short-circuits and earthings, is reduced as far as practicable.

1.1.8 Where it is necessary to make provision for the opening of the doors of the switchboard, this is to be in accordance with one of the following requirements:

a) Opening is to necessitate the use of a key or tool (e.g. when it is necessary to replace a lamp or a fuse-link).

b) All live parts which can be accidentally touched after the door has been opened are to be disconnected before the door can be opened.

c) The switchboard is to include an internal barrier or shutter with a degree of protection not less than IP2X shielding all live parts such that they cannot accidentally be touched when the door is open. It is not to be possible to remove this barrier or shutter except by the use of a key or tool.

1.1.9 All parts of the switchboard are to be readily accessible for maintenance, repair or replacement. In particular, fuses are to be able to be safely inserted and withdrawn from their fuse-bases.

1.1.10 Hinged doors which are to be opened for operation of equipment on the door or inside are to be provided with fixing devices for keeping them in open position.

1.1.11 Means of isolation of the circuit-breakers of generators and other important parts of the installation are to be provided so as to permit safe maintenance while the main busbars are alive.

1.1.12 Where components with voltage exceeding the safety voltage are mounted on hinged doors, the latter are to be electrically connected to the switchboard by means of a separate, flexible protective conductor.

1.1.13 All measuring instruments and all monitoring and control devices are to be clearly identified with indelible labels of durable, flame-retardant material.

1.1.14 The rating of each circuit, together with the rating of the fuse or the appropriate setting of the overload protective device (circuit-breaker, thermal relay etc.) for each circuit is to be permanently indicated at the location of the fuse or protective device.

1.2 Busbars and bare conductors

1.2.1 Busbars are to be of copper or of copper-surrounded aluminium alloy if suitable for use in the marine environment and if precautions are taken to avoid galvanic corrosion.

1.2.2 All connections are to be so made as to inhibit corrosion.

1.2.3 Busbars are to be dimensioned in accordance with IEC Publication 60092-302.

The mean temperature rise of busbars is not to exceed 45°C under rated current condition with an ambient air temperature of 45°C (see Ch 2, Sec 2, [1.2.2]) and is not to have any harmful effect on adjacent components. Higher values of temperature rise may be accepted to the satisfaction of the Society.

1.2.4 The cross-section of neutral connection on an a.c. three-phase, four-wire system is to be at least 50% of the cross-section for the corresponding phases.

1.2.5 Bare main busbars, excluding the conductors between the main busbars and the supply side of outgoing units, are to have the minimum clearances and creepage distances given in Tab 1. The values shown apply to clearances and creepage distances between live parts as well as between live parts and exposed conductive parts.

Note 1: Clearance is the distance between two conductive parts along a string stretched the shortest way between such parts. Creepage distance is the shortest distance along the surface of an insulating material between two conductive parts.

Table 1 : Clearance and creepage distances

Rated insulation voltage a.c. r.m.s. or d.c. (V)	Minimum clearance (mm)	Minimum creepage distance (mm)
≤ 250	15	20
> 250 to ≤ 690	20	25
> 690	25	35

1.2.6 Reduced values as specified in IEC Publication 60092-302 may be accepted for type tested and partially type tested assemblies.

The reference values for the evaluation of the minimum clearances and creepage distances for these assemblies are based on the following:

- pollution degree 3 (conductive pollution occurs, or dry non-conductive pollution occurs which becomes conductive due to condensation which is expected)
- overvoltage category III (distribution circuit level)
- inhomogenous field conditions (case A)
- rated operational voltage 1000 V a.c., 1500 V d.c.
- group of insulating material IIIa.

Special consideration is to be given to equipment located in spaces where a pollution degree higher than 3 is applicable, e.g. in diesel engine rooms.

1.2.7 Busbars and other bare conductors with their supports are to be mechanically dimensioned and fixed such that they can withstand the stresses caused by short-circuits.

Where maximum symmetrical short-circuit currents are expected to exceed 50 kA, calculation is to be submitted to the Society.

1.2.8 Busbars and bare conductors are to be protected, where necessary, against falling objects (e.g. tools, fuses or other objects).

1.3 Internal wiring

1.3.1 Insulated conductors for internal wiring of auxiliary circuits of switchboards are to be constructed in accordance with Ch 2, Sec 9, [2.1.1].

1.3.2 All insulated conductors provided for in [1.3.1] are to be of flexible construction and of the stranded type.

1.3.3 Connections from busbars to protective devices are to be as short as possible. They are to be laid and secured in such a way to minimise the risk of a short-circuit.

1.3.4 All conductors are to be secured to prevent vibration and are to be kept away from sharp edges.

1.3.5 Connections leading to indicating and control instruments or apparatus mounted in doors are to be installed such that they cannot be mechanically damaged due to movement of the doors.

1.3.6 Non-metallic trays for internal wiring of switchboards are to be of flame-retardant material.

1.3.7 Control circuits are to be installed and protected such that they cannot be damaged by arcs from the protective devices.

1.3.8 Where foreseen, fixed terminal connectors for connection of the external cables are to be arranged in readily accessible positions.

1.4 Switchgear and controlgear

1.4.1 Switchgear and controlgear are to comply with IEC Publication 60947 series and to be chosen from among that type approved by the Society.

1.4.2 The characteristics of switchgear, controlgear and protective devices for the various consumers are to be in compliance with Ch 2, Sec 3, [9].

1.5 Auxiliary circuits

1.5.1 Auxiliary circuits are to be designed in such a manner that, as far as practicable, faults in such circuits do not impair the safety of the system. In particular, control circuits are to be designed so as to limit the dangers resulting from a fault between the control circuit and earth (e.g. inadvertent operation or malfunction of a component in the installation), also taking account of the earthing system of their supply.

1.5.2 Auxiliary circuits of essential systems are to be independent of other auxiliary circuits.

1.5.3 Common auxiliary circuits for groups of consumers are permitted only when the failure of one consumer jeopardises the operation of the entire system to which it belongs.

1.5.4 Auxiliary circuits are to be branched off from the main circuit in which the relevant switchgear is used.

1.5.5 The supply of auxiliary circuits by specifically arranged control distribution systems will be specially considered by the Society.

1.5.6 Means are to be provided for isolating the auxiliary circuits as well when the main circuit is isolated (e.g. for maintenance purposes).

1.5.7 For the protection of auxiliary circuits, see Ch 2, Sec 3, [9.13].

1.6 Instruments

1.6.1 The upper limit of the scale of every voltmeter is to be not less than 120% of the rated voltage of the circuit in which it is installed.

1.6.2 The upper limit of the scale of every ammeter is to be not less than 130% of the normal rating of the circuit in which it is installed.

1.6.3 The upper limit of the scale of every wattmeter is to be not less than 120% of the rated voltage of the circuit in which it is installed.

1.6.4 Ammeters or wattmeters for use with a.c. generators which may be operated in parallel are to be capable of indicating 15% reverse-current or reverse power, respectively.

1.6.5 For wattmeters using one current circuit only, the measurement of the current of all generators is to be made in the same phase.

1.6.6 The rated value of the measure read, at full load, is to be clearly indicated on the scales of instruments.

1.6.7 Frequency meters are to have a scale at least ± 5% of the nominal frequency.

1.6.8 The secondary windings of instrument transformers are to be earthed.

1.6.9 Each a.c. generator not operated in parallel is to be provided with:

- 1 voltmeter
- 1 frequency meter
- 1 ammeter in each phase or 1 ammeter with a selector switch to enable the current in each phase to be read
- 1 three-phase wattmeter in the case of generators rated more than 50 kVA.

1.6.10 Each a.c. generator operated in parallel is to be provided with:

- 1 three-phase wattmeter
- 1 ammeter in each phase or 1 ammeter with a selector switch to enable the current in each phase to be read.

1.6.11 For paralleling purposes the following are to be provided:

- 2 voltmeters (voltage measurements of each alternator and busbar)
- 2 frequency meters (frequency measurements of each alternator and busbar).

Note 1: As an alternative, a switch may be provided to enable one voltmeter and one frequency meter to be connected to each generator before the latter is connected to the busbars.

The other voltmeter and frequency meter are to be permanently connected to the busbars.

Note 2: Voltmeter and frequencymeter with dual display may be considered.

1.6.12 Each secondary distribution system is to be provided with one voltmeter.

1.6.13 Switchboards are to be fitted with means for monitoring the insulation level of insulated distribution systems as stipulated in Ch 2, Sec 3, [5.5.1].

1.6.14 The main switchboard is to be fitted with a voltmeter or signal lamp indicating that the cable between the shore-connection box and the main switchboard is energised (see Ch 2, Sec 3, [5.5.7]).

1.6.15 For each d.c. power source (e.g. converters, rectifiers and batteries), one voltmeter and one ammeter are to be provided, except for d.c. power sources for starting devices (e.g. starting motor for emergency generator).

1.7 Synchronisation of generators

1.7.1 It is to be possible to synchronise each generator intended for parallel operation with two independent synchronizing devices. At least one of these synchronizing devices is to be manual.

1.7.2 Provisions are to be made for manual speed control of the prime mover and manual voltage control of the generators at the place where the manual synchronization is carried out.

2 Constructional requirements for section boards and distribution boards

2.1 Construction

2.1.1 Section boards and distribution boards are to be constructed, insofar as applicable, as specified for main and emergency switchboards.

2.1.2 All parts which require operation in normal use are to be placed on the front.

2.1.3 Insulated handrails or handles required in [1.1.5] may be omitted for section boards and distribution boards not requiring prolonged manual operations.

2.1.4 Distribution switchboards which are provided with two or more supply circuits arranged for automatic standby connection are to be provided with positive indication of which of the circuits is feeding the switchboard.

2.1.5 Where switchboard supplying essential services is provided with a forced air cooling system, the air temperature is to be monitored. An alarm is to be activated when temperature exceeds a preset value.

3 Testing

3.1 General

3.1.1 Switchboards are to be subjected to the tests specified from [3.2] to [3.4].

3.1.2 The manufacturer is to issue the relative test reports providing information concerning the construction, serial number and technical data relevant to the switchboard, as well as the results of the tests required.

3.1.3 The tests are to be carried out prior to installation on board.

3.1.4 The test procedures are as specified in IEC Publication 60092-302.

3.1.5 The tests of main switchboards, emergency switchboards or switchboards rated above 100 kW are to be attended by a surveyor of the Society.

3.2 Inspection of equipment, check of wiring and electrical operation test

3.2.1 It is to be verified that the switchboard:

- complies with the approved drawings
- maintains the prescribed degree of protection
- is constructed in accordance with the relevant constructional requirements, in particular as regards creepage and clearance distances.

3.2.2 The connections, especially screwed or bolted connections, are to be checked for adequate contact, possibly by random tests.

3.2.3 Depending on the complexity of the switchboard it may be necessary to carry out an electrical functioning test. The test procedure and the number of tests depend on whether or not the switchboard includes complicated interlocks, sequence control facilities, etc. In some cases it may be necessary to conduct or repeat this test following installation on board.

3.3 High voltage test

3.3.1 The test is to be performed with alternating voltage at a frequency between 25 and 100 Hz of approximately sinusoidal form.

3.3.2 The test voltage is to be applied:

- between all live parts connected together and earth
- between each polarity and all the other polarities connected to earth for the test.

During the high voltage test, measuring instruments, ancillary apparatus and electronic devices may be disconnected and tested separately in accordance with the appropriate requirements.

3.3.3 The test voltage at the moment of application is not to exceed half of the prescribed value. It is then to be increased steadily within a few seconds to its full value. The prescribed test voltage is to be maintained for 1 minute.

3.3.4 The value of the test voltage for main and auxiliary circuits is given in Tab 2 and Tab 3.

Table 2 : Test voltages for main circuits

Rated insulation voltage Ui (V)	Test voltage a.c. (r.m.s.) (V)
Ui ≤ 60	1000
60 < Ui ≤ 300	2000
300 < Ui ≤ 660	2500
660 < Ui ≤ 800	3000
800 < Ui ≤ 1000	3500

Table 3 : Test voltage for auxiliary circuits

Rated insulation voltage Ui (V)	Test voltage a.c. (r.m.s.) (V)
Ui ≤ 12	250
12 < Ui ≤ 60	500
Ui > 60	2 Ui + 1000 (at least 1500)

3.4 Measurement of insulation resistance

3.4.1 Immediately after the high voltage test, the insulation resistance is to be measured using a device with a direct current voltage of at least 500 V.

3.4.2 The insulation resistance between all current carrying parts and earth (and between each polarity and the other polarities) is to be at least equal to 1 MΩ..

Section 9 Cables

1 General

1.1 Type approval

1.1.1 Cables are to be of a type approved by the Society.

2 Constructional requirements

2.1 Construction

2.1.1 Cables and insulated wiring are generally to be constructed in accordance with the relevant recommendations of IEC 60092-350, 60092-352, 60092-353, 60092-354, 60092-360, 60092-370 and 60092-376, as well as with the provisions of this Chapter.

2.1.2 Mineral-insulated cables are to be constructed according to IEC 60702.

2.1.3 Optical fibre cables are to be constructed in accordance with IEC 60794.

2.1.4 Flexible cables constructed according to national standards are to be specially considered by the Society.

2.1.5 Cables and insulated wires manufactured and tested in accordance to standards other than those specified in [2.1.1] may be accepted provided they are in accordance with an acceptable and relevant international or national standard and are of an equivalent or higher safety level than those listed in [2.1.1].

However, cables such as flexible cable, fibre-optic cable, etc. used for special purposes may be accepted provided they are manufactured and tested in accordance with relevant standards accepted by the Society.

2.1.6 Insulated wiring for auxiliary circuits of switchboards may be constituted by cables with a single conductor of the stranded type for all sections, PVC-ST2 or rubber-insulated in accordance with the standards cited in [2.1.1] and without further protection.

2.1.7 The insulated wiring is to be at least of the flame-retardant type according to IEC 60332-1-2. Switchboard wires, of an equivalent flame-retardant type, will be specially considered by the Society.

2.1.8 Fire resistant cables are to be designed and tested in accordance with the relevant IEC 60092 series standards.

They are to comply with the requirements of:

- IEC 60331-1 for cables with an overall diameter exceeding 20 mm, or
- IEC 60331-2 for cables with an overall diameter not exceeding 20 mm,
- otherwise IEC 60331-21.

The minimum flame application time is to be at least 90 minutes.

Fire resistant type cables are to be easily distinguishable.

Note 1: For installation methods refer to those specified in Ch 2, Sec 12, [7.1.4].

Note 2: For special cables, requirements in the following standards may be used:

- IEC 60331-23: Procedures and requirements - Electric data cables
- IEC 60331-25: Procedures and requirements - Optical fibre cables.

2.2 Conductors

2.2.1 Conductors are to be of annealed electrolytic copper with a resistivity not exceeding 17.241 Ω mm^2/km at 20°C according to IEC 60228.

2.2.2 Individual conductor wires of rubber-insulated cables are to be tinned or coated with a suitable alloy.

2.2.3 All conductors are to be stranded, except for cables of nominal cross-sectional area 2,5 mm^2 and less (provided that adequate flexibility of the finished cable is assured).

2.2.4 For the minimum nominal cross-sectional areas permitted, see Ch 2, Sec 3, [11.10].

2.3 Insulating materials

2.3.1 The materials used for insulation are to comply with IEC 60092-360 and to have the thicknesses specified for each type of cable in the relevant standard. The maximum permissible rated temperature is specified for the various materials.

2.3.2 Materials and thicknesses other than those in [2.3.1] are to be specially considered by the Society.

2.4 Inner covering, fillers and binders

2.4.1 The cores of a multicore cable are to be laid up. The spaces between the cores are to be filled so as to obtain an assembly having an essentially circular cross-section. The filling may be omitted in multicore cables having a conductor cross-sectional area not exceeding 4 mm^2.

When a non-metallic sheath is applied directly over the inner covering or the fillers, it may substitute partially for the inner covering or fillers.

2.4.2 The materials used, the binders and the thicknesses of the inner coverings are generally to be in accordance with IEC Publications of the series 60092-3., in relation to the type of cable.

2.5 Protective coverings (armour and sheath)

2.5.1 Metallic armour, if not otherwise protected against corrosion, is to be protected by means of a coating of protective paint (see Ch 2, Sec 3, [11.3]).

2.5.2 The paint is to be non-flammable and of adequate viscosity. When dry, it is not to flake off.

2.5.3 The materials and construction used for (metal) armour are to be in accordance with IEC Publication 60092-350 and their dimensions are to be those specified for each type of cable in the relevant standard.

2.5.4 The materials used for sheaths are to be in accordance with IEC Publication 60092-360 and are to have the thicknesses specified for each type of cable in the relevant standard.

The quality of the materials is to be adequate to the service temperature of the cable.

2.5.5 Materials other than those in [2.5.3] and [2.5.4] are to be specially considered by the Society.

2.6 Identification

2.6.1 Each cable is to have clear means of identification so that the manufacturer can be determined.

2.6.2 Fire non propagating cables are to be clearly labelled with indication of the standard according to which this characteristic has been verified and, if applicable, of the category to which they correspond.

3 Testing

3.1 Type tests

3.1.1 Type tests are to be in accordance with the relevant IEC 60092-3.. Series and IEC 60332-1, IEC 60332-3 Category A, and IEC 60331 where applicable.

3.2 Routine tests

3.2.1 Every length of finished cable is to be subjected to the tests specified in [3.2.2].

3.2.2 The following routine tests are to be carried out:

a) visual inspection

b) check of conductor cross-sectional area by measuring electrical resistance

c) high voltage test

d) insulation resistance measurement

e) dimensional checks (as necessary).

3.2.3 The manufacturer is to issue a statement providing information on the type and characteristics of the cable, as well as the results of the tests required and the Type Approval Certificates.

3.2.4 The test procedure is as specified in IEC Publication 60092-350.

3.2.5 Where an alternative scheme, e.g. a certified quality assurance system, is recognised by the Society, attendance of the Surveyor may not be required.

Section 10 Miscellaneous Equipment

1 Switchgear and controlgear, protective devices

1.1 General

1.1.1 Switchgear and controlgear are to comply with IEC Publication 60947 series.

1.1.2 The protection devices are normally to be type approved by the Society on the basis of the IEC Standards specified in [1.1.1].

Equipment in accordance with national regulations and having at least equivalent characteristics may also be used; necessary justification may be required.

The Society may require, in addition, justification of the characteristics of switchgears, by means of tests for instance.

1.1.3 For materials and construction see Ch 2, Sec 2, [4] and Ch 2, Sec 2, [5].

1.2 Circuit-breakers

1.2.1 Power-driven circuit-breakers are to be equipped with an additional separate drive operated by hand.

1.2.2 Power circuit-breakers with a making capacity exceeding 10 kA are to be equipped with a drive which performs the make operation independently of the actuating force and speed.

1.2.3 Where the conditions for closing the circuit-breaker are not satisfied (e.g. if the undervoltage trip is not energised), the closing mechanism is not to cause the closing of the contacts.

1.2.4 All circuit-breakers rated more than 16 A are to be of the trip-free type, i.e. the breaking action initiated by overcurrent or undervoltage releases is to be fulfilled independently of the position of the manual handle or other closing devices.

1.3 Protection devices

1.3.1 Short-circuit releases are generally to be independent of energy supplied from circuits other than that to be protected. Tripping due to short-circuit is to be reliable even in the event of a total loss of voltage in the protected circuit.

1.3.2 Short-circuit releases for generators are to be equipped with reclosing inhibitors and are to be delayed for selective tripping.

1.3.3 Overload releases or relays are to operate reliably at any voltage variation of the supply voltage in the protected circuit.

1.3.4 Undervoltage relays or releases are to cause the circuit-breaker to open if the voltage drops to 70% - 35% of the rated voltage.

1.3.5 Shunt releases are to ensure the disconnection of the circuit-breaker even when the supply voltage of the release drops to 85% of the rated supply voltage.

1.3.6 The reverse power protection device is to respond to the active power regardless of the power factor, and is to operate only in the event of reverse power.

1.3.7 Single-phase failure devices in three-phase circuits are to operate without a time lag.

1.3.8 Insulation monitoring devices are to continuously monitor the insulation resistance to earth and trigger an alarm should the insulation resistance fall below a predetermined value.

The measuring current of such devices is not to exceed 30 mA in the event of a total short to earth.

2 Electrical slip ring assemblies

2.1 Applicable requirements

2.1.1 Electrical slip rings are to be designed and manufactured according to the applicable requirements of this Section.

2.1.2 Where relevant, electrical slip rings are to be suitable for operation in gas dangerous area in which they are located.

2.2 Construction

2.2.1 The purpose of an electrical slip ring is to form a continuous electrical connection between cables that are fixed to a stationary structure and cables fixed to a rotating structure.

2.2.2 Enclosure and connections are to be made of corrosion resistant materials.

2.2.3 If an oil production pipe passes through the central annulus of the electrical slip ring, it is to be verified that the ambient temperature in the slip ring enclosure does not exceed 45°C. Otherwise special precautions are to be considered.

2.3 Testing

2.3.1 General

Electric slip rings intended for essential services are to be subjected to the tests stated in Tab 1.

Type tests are to be carried out, unless the manufacturer can produce evidence based on previous experience indicating the satisfactory performance of such equipment onboard offshore units or ships.

The manufacturer is to issue the relative test reports providing information concerning the construction, type, serial number and all other technical data relevant to the slip ring, as well as the results of the tests required.

Such test reports are to be made available to the Society.

Tests procedure is to be submitted to the Society for approval.

Tests of electric slip ring intended for essential services are to be attended by a Surveyor of the Society.

Table 1 : Tests to be carried out on electrical slip rings

No.	Tests	Type test **(1)**	Routine test **(2)**
1	Examination of the technical documentation, as appropriate, and visual inspection **(3)** including check of protection index, clearances and creepage distances	X	X
2	Torque measurement test	X	X
3	Insulation resistance measurement	X	X
4	Dielectric strength test	X	X
5	Continuity test	X	X
6	Resistance test (or attenuation test for optical fibre slip rings)	X	X
7	Rotational test	X	X
8	Environmental type test (cold, dry head, damp heat, salt mist, vibration)	X	

(1) Type test on prototype slip ring or test on at least the first batch of slip rings.
(2) The certificates of slip rings routine tested are to contain the manufacturer's serial number of the slip ring which has been type tested and the test result.
(3) A visual examination is to be made of the converter to ensure, as far as practicable, that it complies with technical documentation.

2.4 Description of tests

2.4.1 Visual inspection

It is to be verified that the electrical slip ring assembly:

- complies with the approved drawings
- maintains the prescribed degree of protection
- is constructed in accordance with the relevant constructional requirements, in particular as regards creepage and clearance distances.

2.4.2 Insulation resistance measurement

Immediately after the high voltage tests the insulation resistances are to be measured using a direct current insulation tester between:

a) all current carrying parts connected together and earth

b) all current carrying parts of different polarity or phase.

The minimum values of test voltages and corresponding insulation resistances are given in Tab 2.

Table 2 : Minimum insulation resistance

Rated voltage Un (V)	Minimum test voltage (V)	Minimum insulation resistance (MΩ)
Un = 250	2 Un	1
250 < Un ≤ 1000	500	1
1000 < Un ≤ 7200	1000	Un/1000 + 1
7200 < Un ≤ 15000	5000	Un/1000 + 1

2.4.3 Dielectric strength test

Slip ring assemblies are to be subjected to a high voltage test between the polarities and between live parts and the enclosure.The test voltage is to be as given in Tab 3 and Tab 4. The test voltage is to be applied for 1 minute at any frequency between 25 and 100 Hz of approximately sinusoidal form.

No break down should occur during the test.

Table 3 : Test voltages for main circuits

Rated insulation voltage Ui (V)	Test voltage a.c. (r.m.s.) (V)
Ui ≤ 60	1000
60 < Ui ≤ 300	2000
300 < Ui ≤ 660	2500
660 < Ui ≤ 800	3000
800 < Ui ≤ 1000	3500
1000 < Ui ≤ 3600	10.000
3600 < Ui ≤ 7200	20.000
7200 < Ui ≤ 12000	28.000

Table 4 : Test voltage for auxiliary circuits

Rated insulation voltage Ui (V)	Test voltage a.c. (r.m.s.) (V)
Ui ≤ 12	250
12 < Ui ≤ 60	500
Ui > 60	2 Ui + 1000 (at least 1500)

2.4.4 Torque measurement test

The purpose of this test is to measure and record the running and break-out torque of the electrical slip ring assembly. Test is to be carried out on the full 360° in both clockwise and anti-clockwise directions. Measured values are not to exceed data given by manufacturer.

2.4.5 Continuity test

The purpose of this test is to ensure the continuous connection of each passes while the slip ring is rotating in both directions. No transitional discontinuity is to be detected.

2.4.6 Resistance or attenuation test

The purpose of this test is to measure the maximum resistance or the maximum attenuation of each pass while slip ring is rotating. Test is to be carried out between the inlet and outlet connection of the slip ring assembly on the full 360° in both clockwise and anti-clockwise directions. Values are not to exceed data given by manufacturer.

2.4.7 Rotational test

A rotational test at rated voltage and rated current is to be carried out. Number of rotations is to be evaluated taking into consideration the intended purpose of the slip ring. An endurance test is to be performed following manufacturer recommendations.

3 Lighting fittings

3.1 Applicable requirements

3.1.1 Lighting fittings are to comply with IEC Publications 60598 and 60092-306.

Lighting fittings complying with other standards are to be specially considered by the Society.

3.2 Construction

3.2.1 The temperature of terminals for connection of supplying cables is not to exceed the maximum conductor temperature permitted for the cable (see Ch 2, Sec 3, [11.9]).

Where necessary, luminaires are to be fitted with terminal boxes which are thermally insulated from the light source.

3.2.2 Wires used for internal connections are to be of a temperature class which corresponds to the maximum temperature within the luminaire.

3.2.3 The temperature rise of parts of luminaires which are in contact with the support is not to exceed 50°C. The rise is not to exceed 40°C for parts in contact with flammable materials.

3.2.4 The temperature rise of surface parts which can easily be touched in service is not to exceed 15°C.

3.2.5 High-power lights with higher surface temperatures than those in [3.2.2] and [3.2.3] are to be adequately protected against accidental contact.

4 Accessories

4.1 Applicable requirements

4.1.1 Accessories are to be constructed in accordance with the relevant IEC Publications, and in particular with Publication 60092-306.

4.2 Construction

4.2.1 Enclosures of accessories are to be of metal having characteristics suitable for the intended use on board, or of flame-retardant insulating material.

4.2.2 Terminals are to be suitable for the connection of stranded conductors, except in the case of rigid conductors for mineral-insulated cables.

5 Plug-and-socket connections

5.1 Applicable requirements

5.1.1 Plug-and-socket connections are to comply with IEC Publication 60092-306 and with the following additional standards in relation to their use:

- in accommodation spaces, day rooms and service rooms (up to 16 A, 250 V a.c.): IEC Publication 60083 or 60320, as applicable
- for power circuits (up to 250 A, 690 V a.c.): IEC Publication 60309
- for electronic switchgear: IEC Publications, e.g. 60512 and 60603
- for refrigerated containers: ISO 1496-2.

6 Heating and cooking appliances

6.1 Applicable requirements

6.1.1 Heating and cooking appliances are to comply with the relevant IEC Publications (e.g. those of series 60335), with particular attention to IEC 60092-307.

6.2 General

6.2.1 Power supply

Each heater rated more than 16 A is to be connected to a separate final circuit.

6.2.2 Heating elements are to be enclosed and protected with metal or refractory material.

6.2.3 The terminals of the power supply cable are not to be subjected to a higher temperature than that permitted for the conductor of the connection cable.

6.2.4 The temperature of parts which are to be handled in service (switch knobs, operating handles and the like) is not to exceed the following values:

- 55°C for metal parts
- 65°C for vitreous or moulded material.

6.3 Space heaters

6.3.1 The casing or enclosure of heaters is to be so designed that clothing or other flammable material cannot be placed on them.

6.3.2 The temperature of the external surface of space heaters is not to exceed 60°C.

6.3.3 Space heaters are to be provided with a temperature limiting device without automatic reconnection which automatically trips all poles or phases not connected to earth when the temperature exceeds the maximum permissible value.

6.4 Cooking appliances

6.4.1 Live parts of cooking appliances are to be protected such that any foods or liquids which boil over or spill do not cause short-circuits or loss of insulation.

6.5 Fuel oil and lube oil heaters

6.5.1 In continuous-flow fuel oil and lube oil heaters, the maximum temperature of the heating elements is to be below the boiling point of the oil.

6.5.2 Each oil heater is to be provided with a thermostat maintaining the oil temperature at the correct level.

6.5.3 In addition to the thermostat in [6.5.2], each oil heater is to be provided with a temperature limiting device without automatic reconnection, and with the sensing device installed as close as possible to the heating elements and permanently submerged in the liquid.

6.6 Water heaters

6.6.1 Water heaters are to be provided with a thermostat and safety temperature limiter.

Section 11 Location

1 General

1.1 Location

1.1.1 The degree of protection of the enclosures and the environmental categories of the equipment are to be appropriate to the spaces or areas in which they are located; see Ch 2, Sec 3, Tab 3, Ch 2, Sec 3, Tab 4 and Ch 2, Sec 2, [5.2.2].

1.2 Areas with a risk of explosion

1.2.1 Except where the installation of equipment for explosive gas atmosphere is provided for by the Rules, electrical equipment is not to be installed where flammable gases or vapours are liable to accumulate; see Ch 2, Sec 15.

2 Main electrical system

2.1 Location in relation to the emergency system

2.1.1 The arrangement of the emergency electrical system is to be such that a fire or other casualty in spaces containing the emergency source of electrical power, associated converting equipment, if any, the emergency switchboard and the emergency lighting switchboard will not render inoperative the main electric lighting system and the other primary essential services.

2.2 Main switchboard

2.2.1 The main switchboard shall be so placed relative to one main generating station that, as far as is practicable, the integrity of the normal electrical supply may be affected only by a fire or other casualty in one space.

2.2.2 An environmental enclosure for the main switchboard, such as may be provided by a machinery control room situated within the main boundaries of the space, is not to be considered as separating switchboards from generators.

2.2.3 The main generating station is to be situated within the machinery space, i.e. within the extreme main transverse watertight bulkheads.

2.2.4 Any bulkhead between the extreme main transverse watertight bulkheads is not regarded as separating the equipment in the main generating station provided that there is access between the spaces.

2.2.5 The main switchboard is to be located as close as practicable to the main generating station, within the same machinery space and the same vertical and horizontal A60 fire boundaries.

2.2.6 A non-required subdivision bulkhead, with sufficient access, located between the switchboard and generators, or between two or more generators, is not to be considered as separating the equipment.

3 Emergency electrical system

3.1 Spaces for the emergency source

3.1.1 The emergency source of electrical power, associated transforming equipment, if any, transitional source of emergency power, emergency switchboard and emergency lighting switchboard are to be located in a non-hazardous space, on or above the uppermost continuous deck, above the worst damage waterline and inboard of the relevant damage conditions of the unit. They are to be readily accessible from the open deck.

They shall not be located forward of the collision bulkhead.

3.1.2 The spaces containing the emergency source of electrical power, associated transforming equipment, if any, the transitional source of emergency electrical power and the emergency switchboard are not to be contiguous to the boundaries of machinery spaces of Category A or those spaces containing the main source of electrical power, associated transforming equipment, if any, and the main switchboard.

Where this is not practicable, the contiguous boundaries are to be Class A60.

3.2 Location in relation to the main electrical system

3.2.1 The location of the emergency source of electrical power, associated transforming equipment, if any, the transitional source of emergency power, the emergency switchboard and the emergency lighting switchboard in relation to the main source of electrical power, associated transforming equipment, if any, and the main switchboard shall be such as to ensure to the satisfaction of the Society that a fire or other casualty in the space containing the main source of electrical power, associated transforming equipment, if any, and the main switchboard or in any machinery space of Category A will not interfere with the supply, control and distribution of emergency electrical power.

3.2.2 The arrangement of the main electrical system is to be such that a fire or other casualty in spaces containing the main source of electrical power, associated converting equipment, if any, the main switchboard and the main lighting switchboard will not render inoperative the emergency electric lighting system and the other emergency services other than those located within the spaces where the fire or casualty has occurred.

3.3 Emergency switchboard

3.3.1 The emergency switchboard shall be installed as near as is practicable to the emergency source of electrical power.

3.3.2 Where the emergency source of electrical power is a generator, the emergency switchboard shall be located in the same space unless the operation of the emergency switchboard would thereby be impaired.

3.4 Alternative arrangement of emergency source installation

3.4.1 For units where the main source of electrical power is located in two or more spaces which have their own systems, including power distribution and control systems, completely independent of the systems in the other spaces and such that a fire or other casualty in any one of the spaces will not affect the power distribution from the others, or to the services listed in Ch 2, Sec 3, [3.1.14], the provisions of Ch 2, Sec 3, [3.1.1] may be considered satisfied without an additional emergency source of electrical power, provided the Society is satisfied that:

a) there are at least two generating sets, meeting the provisions of Ch 1, Sec 1, [2.6] and each of sufficient capacity to meet the provisions of Ch 2, Sec 3, [3.1.14], in each of at least two spaces

b) the arrangements in [3.4.1], item a) in each such space are equivalent to those in Ch 2, Sec 3, [3.1.11], [3.3], [3.5.1], Ch 2, Sec 3, [5.4.2] and Ch 1, Sec 2, [3.1.3] so that a source of electrical power is available at all times to the services listed in Ch 2, Sec 3, [3.1.15]

c) the location of each of the spaces referred to in [3.4.1], item a), is in compliance with [3.1.1] and the boundaries meet the provisions of [3.1.2] and [3.2.1], except that contiguous boundaries should consist of an A-60 bulkhead and a cofferdam, or a steel bulkhead insulated to class A-60 on both sides.

3.5 Emergency battery

3.5.1 No accumulator battery fitted in accordance with the provisions of Ch 2, Sec 3, [3.1] is to be installed in the same space as the emergency switchboard.

3.5.2 For units not subject to SOLAS, accumulator batteries fitted in accordance with the provisions of Ch 2, Sec 3, [3] and connected to a charging device of power of 2 kW or less may be accepted in the same space as the emergency switchboard but outside the emergency switchboard to the satisfaction of the Society.

4 Distribution boards

4.1 Distribution boards for cargo spaces and similar spaces

4.1.1 Distribution boards containing multipole switches for the control of power and lighting circuits in bunkers and cargo spaces are to be situated outside such spaces.

4.2 Distribution board for navigation lights

4.2.1 The distribution board for navigation lights is to be placed in an accessible position on the bridge or at the central control position.

5 Cable runs

5.1 General

5.1.1 Cable runs are to be selected so as to be as far as practicable accessible, with the exception of single cables, situated behind walls or ceilings constructed of incombustible materials, supplying lighting fittings and socket-outlets in accommodation spaces, or cables enclosed in pipes or conduits for installation purposes.

5.1.2 Cable runs are to be selected so as to avoid action from condensed moisture and from dripping of liquids.

5.1.3 Connection and draw boxes are to be accessible.

5.1.4 Cables are generally not to be installed across expansion joints.

Where this is unavoidable, however, a loop of cable of length proportional to the expansion of the joint is to be provided (see Ch 2, Sec 12, [7.2.2]).

5.2 Location of cables in relation to the risk of fire and overheating

5.2.1 Cables and wiring serving essential or emergency power, lighting, internal communications or signals are, so far as is practicable, to be routed clear of galleys, laundries, machinery spaces of Category A and their casings and other high fire risk areas, except for supplying equipment in those spaces.

5.2.2 When it is essential that a circuit functions for some time during a fire and it is unavoidable to carry the cable for such a circuit through a high fire risk area (e.g. cables connecting fire pumps to the emergency switchboard), the cable is to be of a fire-resistant type or adequately protected against direct exposure to fire.

5.2.3 The electrical cables to the emergency fire pump are not to pass through the machinery spaces containing the main fire pumps and their source(s) of power and prime mover(s).

They are to be of a fire resistant type, in accordance with Ch 2, Sec 9, [2.1.8], where they pass through other high fire risk areas.

5.2.4 Main cable runs (see Note 1) and cables for the supply and control of essential services are, as far as is practicable, to be kept away from machinery parts having an increased fire risk (see Note 2) unless:

- the cables have to be connected to the subject equipment
- the cables are protected by a steel bulkhead or deck, or
- the cables in that area are of the fire-resisting type.

Note 1: Main cable runs are for example:

- cable runs from generators and propulsion motors to main and emergency switchboards
- cable runs directly above or below main and emergency switchboards, centralised motor starter panels, section boards and centralised control panels for propulsion and essential auxiliaries.

Note 2: Machinery, machinery parts or equipment handling combustibles are considered to present an increased fire risk.

5.2.5 Cables and wiring serving essential or emergency power, lighting, internal communications or signals are to be arranged, as far as practicable, in such a manner as to preclude their being rendered unserviceable by heating of the bulkheads that may be caused by a fire in an adjacent space.

5.2.6 Cables are to be arranged as remote as possible from sources of heat such as hot pipes, resistors, etc. Where installation of cables near heat sources cannot be avoided, and where there is consequently a risk of damage to the cables by heat, suitable shields are to be installed, or other precautions to avoid overheating are to be taken, for example use of ventilation, heat insulation materials or special heat-resisting cables.

5.3 Location of cables in relation to electromagnetic interference

5.3.1 For the installation of cables in the vicinity of radio equipment or of cables belonging to electronic control and monitoring systems, steps are to be taken in order to limit the effects of unwanted electromagnetic interference (see Ch 3, Sec 5).

5.4 Services with a duplicate feeder

5.4.1 In the case of essential services requiring a duplicate supply, the supply and associated control cables are to follow different routes which are to be as far apart as practicable, separated both vertically and horizontally.

5.5 Emergency circuits

5.5.1 Cables supplying emergency circuits are not to run through spaces containing the main source of electrical power, associated transforming equipment, if any, the main switchboard and the main lighting switchboard, except for cables supplying emergency equipment located within such spaces (see [3.2.2]).

6 Storage batteries

6.1 General

6.1.1 Batteries are to be located where they are not exposed to excessive heat, extreme cold, spray, steam or other conditions which would impair performance or accelerate deterioration. They are to be installed in such a way that no damage may be caused to surrounding appliances by the vapours generated.

6.1.2 Storage batteries are to be suitably housed, and compartments (rooms, lockers or boxes) used primarily for their accommodation are to be properly constructed and efficiently ventilated so as to prevent accumulation of flammable gas.

6.1.3 Starter batteries are to be located as close as practicable to the engine or engines served.

6.1.4 Accumulator batteries, except for batteries of self-contained battery-operated lights, should not be located in sleeping quarters. The Society may grant exemptions from or equivalencies to this provision where hermetically sealed batteries are installed.

6.1.5 Lead-acid batteries and alkaline batteries are not to be installed in the same compartment (room, locker, box), unless of valve-regulated sealed type.

6.2 Large vented batteries

6.2.1 Batteries connected to a charging device of power exceeding 2 kW, calculated from the maximum obtainable charging current and the nominal voltage of the battery (hereafter referred to as "large batteries") are to be installed in a room assigned to batteries only.
Where this is not possible, they may be arranged in a suitable locker on deck.

6.2.2 Rooms assigned to large batteries are to be provided with mechanical exhaust ventilation.
Natural ventilation may be employed for boxes located on open deck.

6.2.3 The provisions of [6.2.1] and [6.2.2] also apply to several batteries connected to charging devices of total power exceeding 2 kW calculated for each one as stated in [6.2.1].

6.3 Moderate vented batteries

6.3.1 Batteries connected to a charging device of power between 0,2 kW and 2 kW calculated as stated in [6.2.1] (hereafter referred to as "moderate batteries") are to be arranged in the same manner as large batteries or placed in a box or locker in suitable locations such as machinery spaces, storerooms or similar spaces. In machinery spaces and similar well-ventilated compartments, these batteries may be installed without a box or locker provided they are protected from falling objects, dripping water and condensation where necessary.

6.3.2 Rooms, lockers or boxes assigned to moderate batteries are to be provided with natural ventilation or mechanical exhaust ventilation, except for batteries installed without a box or locker (located open) in well-ventilated spaces.

6.3.3 The provisions of [6.3.1] and [6.3.2] also apply to several batteries connected to charging devices of total power between 0,2 kW and 2 kW calculated for each one as stated in [6.2.1].

6.4 Small vented batteries

6.4.1 Batteries connected to a charging device of power less than 0,2 kW calculated as stated in [6.2.1] (hereafter referred to as "small batteries") are to be arranged in the same manner as moderate or large batteries, or without a box or locker, provided they are protected from falling objects, or in a box in a ventilated area.

6.4.2 Boxes for small batteries may be ventilated only by means of openings near the top to permit escape of gas.

6.5 Valve regulated sealed batteries

6.5.1 The valve regulated sealed batteries are to be installed in ventilated spaces, following conditions indicated in [6.6.3]. Installation of electrical equipment in spaces where valve regulated sealed batteries are located are indicated in Ch 2, Sec 15, [6.1.3].

6.5.2 Valve regulated sealed batteries of power exceeding 4 kW are considered as large vented batteries for their location.

6.5.3 Valve regulated sealed batteries of power less than 4 kW are considered as moderated vented batteries for their location.

6.6 Ventilation

6.6.1 The ventilation of battery compartments is to be independent of ventilation systems for other spaces.

6.6.2 The quantity of air expelled (by natural or forced ventilation) for compartments containing vented type batteries is to be at least equal to:

$Q = 110\, I\, n$

where:

Q	:	Quantity of air expelled, in litres per hour
I	:	Maximum current delivered by the charging equipment during gas formation, but not less than one quarter of the maximum obtainable charging current, in amperes
n	:	Number of cells in series.

6.6.3 The quantity of air expelled (by natural or forced ventilation) for compartments containing valve-regulated sealed batteries is to be at least 25% of that given in [6.6.2].

6.6.4 Ducts are to be made of a corrosion-resisting material or their interior surfaces are to be painted with corrosion-resistant paint.

6.6.5 Adequate air inlets (whether connected to ducts or not) are to be provided near the floor of battery rooms or the bottom of lockers or boxes (except for that of small batteries).

Air inlet may be from the open air or from another space (for example from machinery spaces).

6.6.6 Exhaust ducts of natural ventilation systems are:

a) to be run directly from the top of the compartment to the open air above (they may terminate in the open or in well-ventilated spaces)

b) to terminate not less than 90 cm above the top of the battery compartment

c) to have no part more than 45° from the vertical

d) not to contain appliances (for example for barring flames) which may impede the free passage of air or gas mixtures.

Where natural ventilation is impracticable or insufficient, mechanical exhaust ventilation is to be provided.

6.6.7 In mechanical exhaust ventilation systems:

a) electric motors are to be outside the exhaust ducts and battery compartment and are to be of safe type if installed within 3 m from the exhaust of the ventilation duct

b) fans are to be so constructed and of a material such as to render sparking impossible in the event of the impeller touching the fan casing

c) steel or aluminium impellers are not to be used

d) the system is to be interlocked with the charging device so that the battery cannot be charged without ventilation (trickle charge may be maintained)

e) a temperature sensor is to be located in the battery compartment to monitor the correct behaviour of the battery in cases where the battery element is sensitive to temperature.

6.6.8 For natural ventilation systems for deck boxes:

a) holes for air inlet are to be provided on at least two opposite sides of the box

b) the exhaust duct is to be of ample dimensions

c) the duct is to terminate at least 1,25 m above the box in a goose-neck or mushroom-head or the equivalent

d) the degree of protection is to be in accordance with Ch 2, Sec 3, Tab 3.

Section 12 Installation

1 General

1.1 Protection against injury or damage caused by electrical equipment

1.1.1 All electrical equipment is to be so installed as not to cause injury when handled or touched in the normal manner.

1.1.2 All electrical equipment is to be installed in such a way that live parts cannot be inadvertently touched, unless supplied at a safety voltage.

1.1.3 For protective earthing as a precaution against indirect contact, see Article [2].

1.1.4 Equipment is to be installed so as not to cause, or at least so as to reduce to a minimum, electromagnetic interference.

1.2 Protection against damage to electrical equipment

1.2.1 Electrical equipment is to be so placed that as far as practicable it is not exposed to risk of damage from water, steam, oil or oil vapours.

1.2.2 The air supply for internal ventilation of electrical equipment is to be as clean and dry as practicable; cooling air for internal ventilation is not to be drawn from below the floor plates in engine and/or boiler rooms.

1.2.3 Equipment is to be so mounted that its enclosing arrangements and the functioning of the built-in equipment will not be affected by distortions, vibrations and movements of the unit's structure or by other damage liable to occur.

1.2.4 If electrical fittings, not of aluminium, are attached to aluminium, suitable provision is to be made to prevent galvanic corrosion.

1.3 Accessibility

1.3.1 Equipment is to be so installed that sufficient space is available for inspection and maintenance as required for all its parts (see [6.1.3]).

1.4 Electrical equipment in environmentally controlled spaces

1.4.1 Where electrical equipment is installed within environmentally controlled space the ambient temperature for which the equipment is to be suitable may be reduced from 45°C and maintained at a value not less than 35°C provided:

a) the equipment is not for use for emergency services and is located outside of the machinery space(s)

b) temperature control is achieved by at least two cooling units so arranged that in the event of loss of one cooling unit, for any reason, the remaining unit(s) is capable of satisfactorily maintaining the design temperature

c) the equipment is able to be initially set to work safety within a 45°C ambient temperature until such a time that the lesser ambient temperature may be achieved; the cooling equipment is to be rated for a 45°C ambient temperature

d) audible and visual alarms are provided, at a continually manned control station, to indicate any malfunction of the cooling units.

1.4.2 In accepting a lesser ambient temperature than 45°C, it is to be ensured that electrical cables for their entire length are adequately rated for the maximum ambient temperature to which they are exposed along their length.

2 Earthing of non-current carrying parts

2.1 Parts which are to be earthed

2.1.1 Exposed metal parts of both fixed and portable electrical machines or equipment which are not intended to be live but which are liable under fault conditions to become live and similar metal parts inside non-metallic enclosures are to be earthed unless the machines or equipment are:

a) supplied at a voltage not exceeding 50 V direct current or 50 V, root mean square between conductors, achieved without the use of auto-transformers (safety voltage); or

b) supplied at a voltage not exceeding 250 V by safety isolating transformers supplying one consuming device only; or

c) constructed in accordance with the principle of double insulation.

2.1.2 To minimise shock from high frequency voltage induced by the radio transmitter, handles, handrails and other metal elements on the bridge or upper decks are to be in electrical connection with the hull or superstructures.

2.2 Methods of earthing

2.2.1 Metal frames or enclosures of apparatus and electrical machinery may be fixed to, and in metallic contact with, the unit's structure, provided that the surfaces in contact are clean and free from rust, scale or paint when installed and are firmly bolted together.

2.2.2 For metal frames or enclosures which are not earthed as specified in [2.2.1], earthing connections complying with [2.3] and [2.4] are to be used.

2.2.3 For requirements regarding the earthing of coverings of cables and the mechanical protection of cables, see [7.11] and [7.12].

2.3 Earthing connections

2.3.1 Every earthing connection is to be of copper or other corrosion-resistant material and is to be securely installed and protected, where necessary, against damage and electrolytic corrosion.

2.3.2 The nominal cross-sectional area of each copper earthing connection is to be not less than that required in Tab 1.

Earthing connections of other metals are to have conductance at least equal to that specified for a copper earthing connection.

2.3.3 Metal parts of portable appliances are to be earthed, where required (see [2.1.1]), by means of an earth-continuity conductor in the flexible supply cable or cord, which has the cross-sectional area specified in Tab 1 and which is earthed, for example, through the associated plug and socket.

2.3.4 In no circumstances is the lead sheathing or armour of cables to be relied upon as the sole means of earthing.

2.4 Connection to the unit's structure

2.4.1 Every connection of an earth-continuity conductor or earthing lead to the unit's structure is to be secured by means of a screw of brass or other corrosion-resistant material of diameter not less than 6 mm.

2.4.2 Such earthing connection is not to be used for other purposes.

2.4.3 The connection described in [2.4.1] is to be located in an accessible position where it may readily be checked.

2.5 Earthed distribution systems

2.5.1 The system earthing of earthed distribution systems is to be effected by means independent of any earthing arrangements of non-current carrying parts and is to be connected to the hull at one point only.

2.5.2 In an earthed distribution system in which the earthing connection does not normally carry current, this connection is to conform with the requirements of [2.3], except that the lower limit of 70 mm^2 (see Tab 1) does not apply.

2.5.3 In a distribution system with hull return, the system earthing connection is to have at least the same cross-sectional area as the feeder lines.

2.5.4 The earthing connection is to be in an accessible position where it may readily be inspected and disconnected for insulation testing.

2.6 Aluminium superstructures

2.6.1 When aluminium superstructures are insulated from the steel hull to prevent electrolytic corrosion, they are to be secured to the hull by means of a separate bonding connection.

2.6.2 The connections are to be adequately close together and are to have a resistance less than 0,1 Ω.

2.6.3 The connections are to be located where they may readily be inspected.

Table 1 : Cross-sectional area of earth-continuity conductors and earthing connections

Type of earthing connection		Cross-sectional area of associated current carrying conductor	Minimum cross-sectional area of copper earthing connection	
1	Earth-continuity conductor in flexible cable or flexible cord	any	Same as current carrying conductor up to and including 16 mm² and one half above 16 mm² but at least 16 mm²	
2	Earth-continuity conductor incorporated in fixed cable	any	a) for cables having an insulated earth-continuity conductor • a cross-section equal to the main conductors up to and including 16 mm², but minimum 1,5 mm² • a cross-section not less than 50% of the cross-section of the main conductor when the latter is more than 16 mm², but at least 16 mm² b) for cables with a bare earth wire in direct contact with the lead sheath	
			Cross-section of main conductor (mm²)	Earthing connection (mm²)
			1 ÷ 2,5 4 ÷ 6	1 1,5
3	Separate fixed earthing conductor	≤ 2,5 mm²	Same as current carrying conductor subject to minimum of • 1,5 mm² for stranded earthing connection, or • 2,5 mm² for unstranded earthing connection	
		> 2,5 mm² but ≤ 120 mm²	One half the cross-sectional area of the current carrying conductor, subjected to a minimum of 4 mm²	
		> 120 mm²	70 mm²	

3 Rotating machines

3.1

3.1.1 Every rotating machine is preferably to be installed with the shaft in the fore-and-aft direction. Where a rotating machine of 100 kW and over is installed athwartship, or vertically, it is to be ensured that the design of the bearings and the arrangements for lubrication are satisfactory to withstand the rolling specified in Ch 1, Sec 1, [2.6].

4 Semiconductor converters

4.1 Semiconductor power converters

4.1.1 Naturally air-cooled semiconductor converters are to be installed such that the circulation of air to and from the stacks or enclosures is not impeded and that the temperature of the cooling inlet air to converter stacks does not exceed the ambient temperature for which the stacks are specified.

5 Vented type storage batteries

5.1 General

5.1.1 Batteries are to be arranged so that each cell or crate of cells is accessible from the top and at least one side to permit replacement and periodical maintenance.

5.1.2 Cells or crates are to be carried on insulating supports of material non-absorbent to the electrolyte (e.g. treated wood).

5.1.3 Cells are to be securely chocked by means of insulating material non-absorbent to the electrolyte, e.g. strips of treated wood. Special mechanical precautions are to be taken to prevent the emergency battery from being damaged by the shock due to a collision.

5.1.4 Provision is to be made for the free circulation of air.

5.2 Protection against corrosion

5.2.1 The interior of battery compartments (rooms, lockers, boxes) including all metal parts subject to the electrolyte is to be protected against the deteriorating effect of the latter by electrolyte-resistant coating or other equivalent means, unless corrosion-resistant materials are used.

5.2.2 Interior surfaces of metal shelves for battery cells, whether or not grouped in crates or trays, are to be protected by a lining of electrolyte-resistant material, watertight and carried up to at least 75 mm on all sides. In particular, linings are to have a minimum thickness of 1,5 mm, if of lead sheet for lead-acid batteries, and of 0,8 mm, if of steel for alkaline batteries.

Alternatively, the floor of the room or locker is to be lined as specified above to a height of at least 150 mm.

5.2.3 Battery boxes are to be lined in accordance with [5.2.2] to a height of at least 75 mm.

6 Switchgear and controlgear assemblies

6.1 Main switchboard

6.1.1 The main switchboard is to be so arranged as to give easy access as may be needed to apparatus and equipment, without danger to personnel.

6.1.2 An unobstructed space is to be left in front of the switchboard wide enough to allow access for operation; such width is generally about 1 metre.

When withdrawable equipment is contained in the switchboard, the width of the space is to be not less than 0,5 m when the equipment is fully withdrawn.

Reduced widths may be considered for small units.

6.1.3 Where necessary, an unobstructed space is to be provided at the rear of the switchboard ample to permit maintenance; in general, the width of this passage is to be not less than 0,6 m, except that this may be reduced to 0,5 m in way of stiffeners and frames, and the height sufficient for the operation foreseen.

6.1.4 Where the switchboard is open at the rear, the rear space in [6.1.3] is to form a locked space provided at each end with an access door. The required IP protection for the corresponding location is to be fulfilled.

6.1.5 If necessary, the clear height above the switchboard specified by the manufacturer is to be maintained for pressure relief in the event of a short-circuit.

6.1.6 When the voltage exceeds the safety voltage, non-conducting mats or gratings are to be provided at the front and rear of the switchboard as necessary.

If an assembly contains withdrawable equipment, the insulating mat or grating is to be provided in front of and on both sides of the equipment in its fully withdrawn position.

This requirement does not apply when the floor is made of an insulating layer.

6.1.7 Piping and conduits are not to be installed directly above or in the vicinity of switchboards.

Where this is unavoidable, pipes and conduits are to have welded joints only or to be provided with protection against spray from steam or pressurised liquids or dripping.

6.2 Emergency switchboard

6.2.1 For the installation of the emergency switchboard, the same requirements apply as given in [6.1] for the installation of the main switchboard.

6.3 Section boards and distribution boards

6.3.1 For the installation of section and distribution boards, the same requirements apply, as far as applicable, as given in [6.1] for the installation of the main switchboard.

Note 1: Removable mats for use only during repair and maintenance may be considered to satisfy [6.1.6].

6.3.2 In accommodation spaces, where open type assemblies are surrounded by combustible material, a fire barrier of incombustible material is to be provided.

7 Cables

7.1 General

7.1.1 Cables having insulating materials with different maximum permissible conductor temperatures are not to be bunched together.

Where this is not practicable, the cables are to be so installed that no cable reaches a temperature higher than its rating.

7.1.2 Cables having a protective covering which may damage the covering of more vulnerable cables are not to be bunched with the latter.

7.1.3 Cables having a bare metallic sheath (e.g. of copper) or braid or armour are to be installed in such a way that galvanic corrosion by contact with other metals is prevented.

7.1.4 All cables and wiring external to equipment are to be so installed as not to impair their original flame-retarding properties.

To this end, the following methods may be used:

a) the use of cables which have been tested in accordance with IEC 60332-3-22 Category A or an equivalent test procedure for cables installed in bunches, or

b) the use of fire stops having at least B0 penetrations fitted as follows (see Fig 1, Fig 2, Fig 3 and Fig 4):
   - cable entries at the main and emergency switchboard
   - where cables enter engine control rooms
   - cable entries at centralised control panels for propulsion machinery and essential auxiliaries
   - at each end of totally enclosed cable trunks
   - at every second deck or approximately 6 metres for verticals runs and every 14 metres for horizontal runs in enclosed and semi-enclosed spaces
   - at the boundaries of the spaces in cargo areas.

c) the use of fire protection coating applied to at least 1 metre in every 14 metres on horizontal cable runs and over the entire length of vertical cable runs for cables installed in enclosed and semi-enclosed spaces.

The cable penetrations are to be installed in steel plates of at least 3 mm thickness extending all around to twice the largest dimension of the cable run for vertical runs and once for horizontal runs, but need not extend through ceilings, decks, bulkheads or solid sides of trunks. These precautions apply in particular to bunches of 5 or more cables in areas with a high fire risk (such as Category A machinery spaces, galleys etc.) and to bunches of more than 10 cables in other areas.

7.1.5 Cables for high voltage, low voltage, control and instrumentation are not to be installed on the same cable ladders or trays. Where insufficient space makes this impossible, cables for low voltage, control and instrumentation may be installed on the same tray, but not in the same cable bunch.

7.2 Radius of bend

7.2.1 The internal radius of bend for the installation of cables is to be chosen according to the type of cable as recommended by the manufacturer.

Its value is generally to be not less than the values given in Tab 2.

7.2.2 Where the installation of cables across expansion joints is unavoidable, the minimum internal radius of the loop at the end of the travel of the expansion joint is to be not less than 12 times the external diameter of the cable.

Table 2 : Bending radii

Cable construction		Overall diameter of cable (D)	Minimum internal radius of bend
Insulation	Outer covering		
Thermoplastic or thermosetting with circular copper conductors	Unarmoured or unbraided	≤ 25 mm	4 D
		> 25 mm	6 D
	Metal braid screened or armoured	any	6 D
	Metal wire armoured Metal tape armoured or metal-sheathed	any	6 D
	Composite polyester/metal laminate tape screened units or collective tape screening	any	8 D
Thermoplastic or thermosetting with shaped copper conductors	any	any	8 D

Figure 1 : Totally enclosed trunks

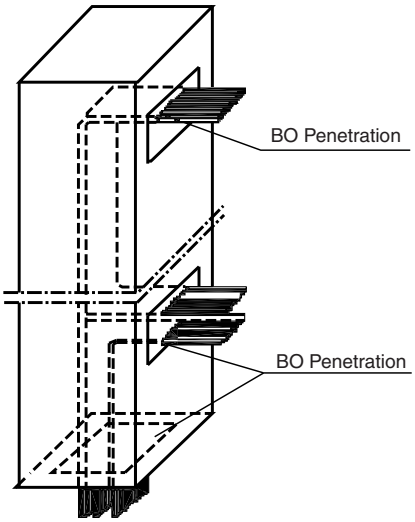

Figure 2 : Non-totally enclosed trunks, vertical

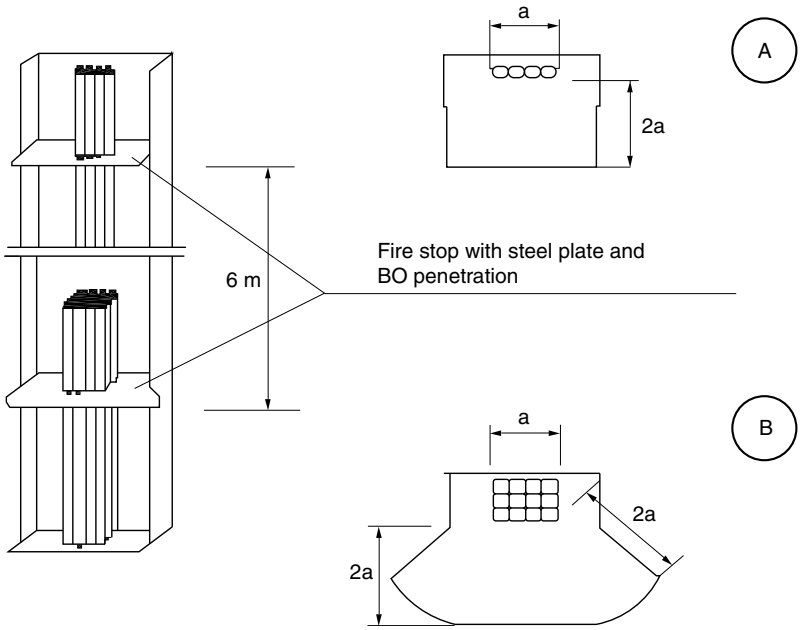

Figure 3 : Non-totally enclosed trunks, horizontal

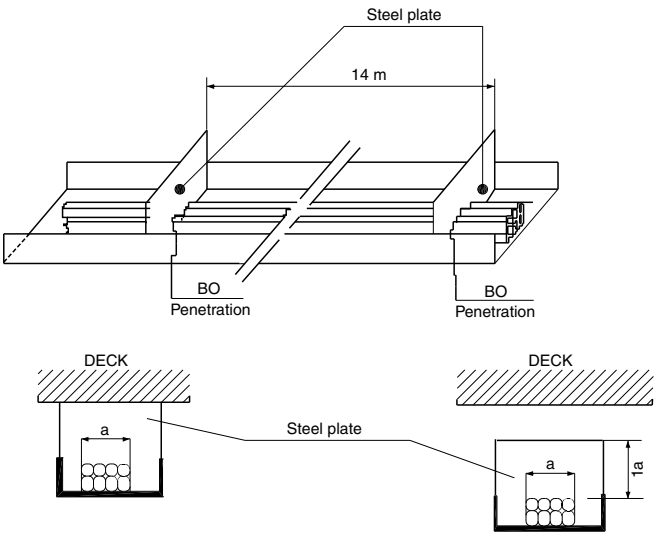

Figure 4 : Open cables runs

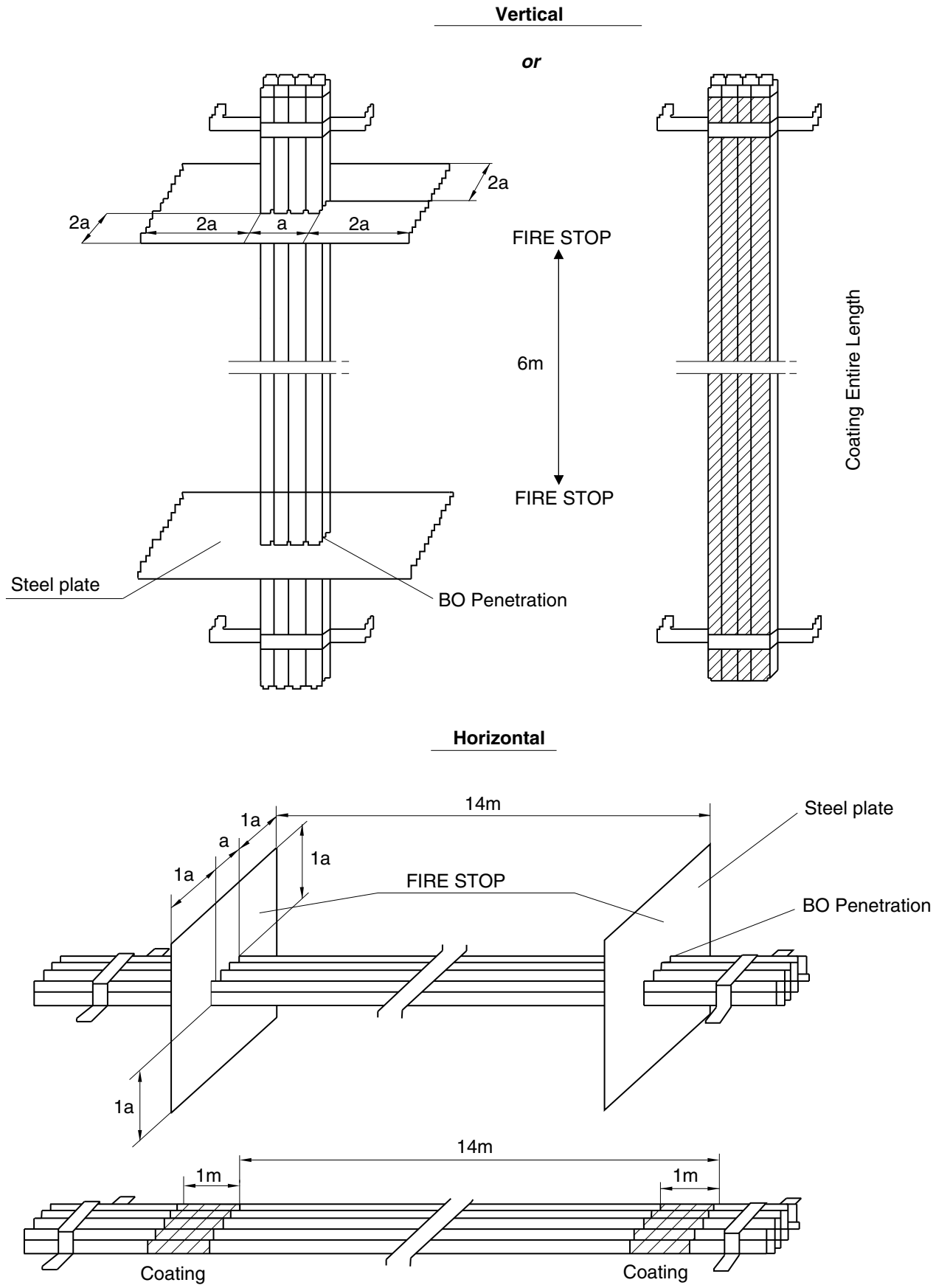

7.3 Fixing of cables

7.3.1 Cables shall be installed and supported in such a manner as to avoid chafing or other damage.

7.3.2 The supports (tray plates, separate support brackets or hanger ladders) and the corresponding accessories are to be of robust construction and of corrosion-resistant material or suitably treated before erection to resist corrosion.

When cables are installed directly on aluminium structures, fixing devices of aluminium or suitably treated steel are to be used.

For mineral-insulated cables with copper sheath, fixing devices in contact with the sheath are to be of copper alloy.

7.3.3 With the exception of cables installed in pipes, conduits, trunkings or special casings, cables are to be fixed by means of clips, saddles or straps of suitable material, in order to tighten the cables without their coverings being damaged.

7.3.4 Cable clips or straps made from a material other than metal are to be manufactured of a flame-retardant material.

7.3.5 The distances between fastenings and between supports are to be suitably chosen according to the type and number of cables and the probability of vibration.

7.3.6 When cables are fixed by means of clips or straps made from a material other than metal and these cables are not laid on top of horizontal cable supports (e.g. in the case of vertical installation), suitable metal clips or saddles spaced not more than 1 metre apart are to be used in addition in order to prevent the release of cables during a fire.

7.3.7 Suspended cables of fire-resisting type are to be fixed by means of steel straps spaced not more than 500 mm apart.

7.4 Mechanical protection

7.4.1 Cables exposed to risk of mechanical damage are to be protected by metal casing, profiles or grids or enclosed in metal pipes or conduits, unless the cable covering (e.g. armour or sheath) provides adequate mechanical protection.

7.4.2 In situations where there would be an exceptional risk of mechanical damage, e.g. in holds, storage spaces, cargo spaces, etc., cables are to be protected by metal casing, trunkings or conduits, even when armoured, if the unit's structure or attached parts do not afford sufficient protection for the cables.

7.4.3 For the protection of cables passing through decks, see [7.5.3].

7.4.4 Metal casing used for mechanical protection of cables is to be effectively protected against corrosion.

7.5 Penetrations of bulkheads and decks

7.5.1 If cables have to pass without adequate support through non-watertight bulkheads and generally through holes drilled in sheets of structural steel, these holes are to be fitted with glands or bushings of suitable material.

7.5.2 If cables have to pass through a watertight bulkhead or deck, the penetration is to be effected in a watertight manner.

Either suitable individual watertight glands for single cables or boxes containing several cables and filled with a flame-retardant packing may be used for this purpose.

Whichever type of penetration is used, the watertight integrity of the bulkheads or deck is to be maintained.

7.5.3 Cables passing through decks and continuing vertically are to be protected against mechanical damage to a height of about 200 mm above the deck.

7.5.4 Where cables pass through bulkheads or decks separating areas with a risk of explosion, arrangements are to be such that hazardous gas or dust cannot penetrate through openings for the passage of cables into other areas.

7.5.5 Where cables pass through a bulkhead or deck which is required to have some degree of fire integrity, penetration is to be so effected as to ensure that the required degree of fire integrity is not impaired.

7.6 Expansion joints

7.6.1 If there is reason to fear that a tray plate, pipe or conduit may break because of the motion of the unit, different load conditions and temperature variations, appropriate expansion joints are to be provided.

This may apply in particular in the case of cable runs on the weather deck.

7.7 Cables in closed pipes or conduits

7.7.1 Closed pipes or conduits are to have such internal dimensions and radius of bend as will permit the easy drawing in and out of the cables which they are to contain; the internal radius of bend is to be not less than that permitted for cables and, for pipes exceeding 63 mm external diameter, not less than twice the external diameter of the pipe where this value is greater.

7.7.2 Closed pipes and conduits are to be suitably smooth on the interior and are to have their ends shaped or bushed in such a way as not to damage the cable covering.

7.7.3 The space factor (ratio of the sum of the cross-sectional areas corresponding to the external diameters of the cables to the internal cross-sectional areas of the pipe or conduit) is to be not greater than 0,4.

7.7.4 If necessary, openings are to be provided at the highest and lowest points so as to permit air circulation and ensure that the heat from the cables can be dissipated, and to obviate the possibility of water accumulating at any part of the pipe or conduit.

7.7.5 Vertical trunking for electrical cables is to be so constructed as not to jeopardise the required passive fire protection between the spaces.

7.7.6 Metal pipes or conduits are to be protected against corrosion.

7.7.7 Non-metallic pipes or conduits are to be flame-retardant.

7.8 Cables in casings or trunking and conduits with removable covers

7.8.1 Covers are to be removable and when they are open, cables are to be accessible.

7.8.2 Materials used are to comply with [7.7.6] and [7.7.7].

7.8.3 If the fixing of covers is by means of screws, the latter are to be of non-rusting material and arranged so as not to damage the cables.

7.8.4 Means are to be provided to ensure that the heat from the cables can be dissipated and water accumulation is avoided (see [7.7.4]).

7.9 Cable ends

7.9.1 Terminations in all conductors are to be so made as to retain the original electrical, mechanical, flame-retarding properties of the cable.

7.9.2 Where mechanical clamps are not used, the ends of all conductors having a cross-sectional area greater than 4 mm^2 are to be fitted with soldering sockets or compression-type sockets of sufficient size to contain all the strands of the conductor.

7.9.3 Cables not having a moisture-resistant insulation (e.g. mineral-insulated) are to have their ends effectively sealed against ingress of moisture.

7.10 Joints and tappings (branch circuit)

7.10.1 Cable runs are normally not to include joints. Where absolutely necessary, cable joints are to be carried out by a junction method with rebuilding of the insulation and protective coverings.

7.10.2 Joints in all conductors are to be so made as to retain the original electrical (continuity and isolation), mechanical (strength and protection), flame-retarding and, where necessary, fire-resisting properties of the cable.

7.10.3 Tappings (branch circuits) are to be made via suitable connections or in suitable boxes of such design that the conductors remain adequately insulated and protected from atmospheric action and are fitted with terminals or busbars of dimensions appropriate to the current rating.

7.10.4 Cables for safety voltages are not to terminate in the same connection boxes as cable for higher voltages unless separated by suitable means.

7.11 Earthing and continuity of metal coverings of cables

7.11.1 All metal coverings of cables are to be electrically connected to the metal hull of the unit.

7.11.2 Metal coverings are generally to be earthed at both ends of the cable, except for [7.11.3] and [7.11.4].

7.11.3 Single-point earthing is admitted for final sub-circuits (at the supply end), except for those circuits located in areas with a risk of explosion.

7.11.4 Earthing is to be at one end only in those installations (mineral-insulated cables, intrinsically safe circuits, control circuits (see Ch 3, Sec 5), etc.) where it is required for technical or safety reasons.

7.11.5 Metal coverings of single-core a.c. cables and special d.c. cables with high “ripple” content (e.g. for thyristor equipment) are to be earthed at one point only (e.g. at the mid-point).

7.11.6 The electrical continuity of all metal coverings of cables throughout the length of the latter, particularly at joints and tappings, is to be ensured.

7.11.7 The metal covering of cables may be earthed by means of glands intended for the purpose and so designed as to ensure an effective earth connection.

The glands are to be firmly attached to, and in effective electrical contact with, a metal structure earthed in accordance with these requirements.

7.11.8 The metal covering of cables may also be earthed by means of clamps or clips of corrosion-resistant material making effective contact with the covering and earthed metal.

7.12 Earthing and continuity of metal pipes, conduits and trunking or casings

7.12.1 Metal casings, pipes, conduits and trunking are to be effectively earthed.

7.12.2 Pipes or conduits may be earthed by being screwed into a metal enclosure, or by nuts on both sides of the wall of a metallic enclosure, provided the surfaces in contact are clean and free from rust, scale or paint and that the enclosure is in accordance with these requirements on earthing.

The connection is to be painted immediately after assembly in order to inhibit corrosion.

7.12.3 Pipes and conduits may be earthed by means of clamps or clips of corrosion-resistant metal making effective contact with the earthed metal.

7.12.4 Pipes, conduits or trunking together with connection boxes of metallic material are to be electrically continuous.

7.12.5 All joints in metal pipes and conduits used for earth continuity are to be soundly made and protected, where necessary, against corrosion.

7.12.6 Individual short lengths of pipes or conduits need not be earthed.

7.13 Precautions for single-core cables for a.c.

7.13.1 For the earthing of metal coverings see [7.11.5].

7.13.2 Where it is necessary to use single-core cables for alternating current circuits rated in excess of 20 A, the requirements of [7.13.3] to [7.13.7] are to be complied with.

7.13.3 Conductors belonging to the same circuit are to be contained within the same pipe, conduit or trunking, unless this is of non-magnetic material.

7.13.4 Cable clips are to include cables of all phases of a circuit unless the clips are of non-magnetic material.

7.13.5 In the installation of two, three or four single-core cables forming respectively single-phase circuits, three-phase circuits, or three-phase and neutral circuits, the cables are to be in contact with one another, as far as possible. In any event, the distance between the external covering of two adjacent cables is to be not greater than one diameter.

7.13.6 When single-core cables having a current rating greater than 250 A are installed near a steel bulkhead, the clearance between the cables and the bulkhead is to be at least 50 mm, unless the cables belonging to the same circuit are installed in trefoil twisted formation.

7.13.7 Magnetic material is not to be used between single-core cables of a group. Where cables pass through steel plates, all the conductors of the same circuit are to pass through a plate or gland, so made that there is no magnetic material between the cables, and the clearance between the cables and the magnetic material is to be no less than 75 mm, unless the cables belonging to the same circuit are installed in trefoil twisted formation.

7.14 Cables in refrigerated spaces

7.14.1 For the types of cables permitted in refrigerated spaces, see Ch 2, Sec 3, [11.4].

7.14.2 Power cables installed in refrigerated spaces are not to be covered by thermal insulation. Moreover, such cables are not to be placed directly on the face of the refrigerated space unless they have a thermoplastic or elastomeric extruded sheath.

7.14.3 Power cables entering a refrigerated space are to pass through the walls and thermal insulation at right angles, in tubes sealed at each end and protected against oxidation.

7.15 Cables in areas with a risk of explosion

7.15.1 For the types of cables permitted in areas with a risk of explosion, see Ch 2, Sec 15.

7.15.2 For penetration of bulkheads or decks separating areas with a risk of explosion, see [7.5.4].

7.15.3 Cables of intrinsically safe circuits are to be separated from the cables of all other circuits (minimum 50 mm).

7.16 Cables and apparatus for services required to be operable under fire conditions

7.16.1 Cables and apparatus for services required to be operable under fire conditions including their power supplies are to be so arranged that the loss of these services is minimized due to a localized fire at any one area or zone listed in Ch 2, Sec 1, [4.25].

7.17 Cables in the vicinity of radio equipment

7.17.1 All cables between antennas and transmitters are to be routed separately of any other cable.

7.17.2 Where it is necessary to use single-core cables, the arrangement of conductors is to be such as to avoid complete or partial loops.

7.18 Cable trays/protective casings made of plastics materials

7.18.1 Cable trays or protective casings made of plastics materials (thermoplastic or thermosetting plastic material) are to be type-approved or case-by-case approved.

7.18.2 Cable trays/protective casings are to be supplemented by metallic fixing and straps such that in the event of a fire they, and the cables affixed, are prevented from falling and causing injury to personnel and/or an obstruction to any escape route. When used on open deck, they are to be protected against U.V. light.

7.18.3 The load on the cable trays/ protective casings is to be within the Safe Working Load (SWL). The support spacing is not to be greater than the manufacturer recommendations nor in excess of spacing at SWL test. In general, the spacing is not to exceed 2 meters.

7.18.4 The selection and spacing of cable tray/protective casing supports are to take into account:

- cable trays/protective casings' dimensions
- mechanical and physical properties of their material
- mass of cable trays/protective casings
- loads due weight of cables, external forces, thrust forces and vibrations
- maximum accelerations to which the system may be subjected
- combination of loads.

7.18.5 The sum of the cables total cross-sectional area, based on the cables external diameter is not to exceed 40% of the protective casing internal cross-sectional area. This does not apply to a single cable in a protective casing.

8 Various appliances

8.1 Lighting fittings

8.1.1 Lighting fittings are to be so arranged as to prevent temperature rises which could damage the cables and wiring.

Note 1: Where the temperature of terminals of lighting fittings exceeds the maximum conductor temperature permitted for the supplied cable (see Ch 2, Sec 3, [11.9]), special installation arrangements, such as terminal boxes thermally insulated from the light source, are to be provided.

8.1.2 Lighting fittings are to be so arranged as to prevent surrounding material from becoming excessively hot.

8.1.3 Lighting fittings are to be secured in place such that they cannot be displaced by the motion of the vessel.

8.1.4 Emergency lights are to be marked for easy identification.

8.2 Heating appliances

8.2.1 Space heaters are to be so installed that clothing, bedding and other flammable material cannot come in contact with them in such a manner as to cause risk of fire.

Note 1: To this end, for example, hooks or other devices for hanging garments are not to be fitted above space heaters or, where appropriate, a perforated plate of incombustible material is to be mounted above each heater, slanted to prevent hanging anything on the heater itself.

8.2.2 Space heaters are to be so installed that there is no risk of excessive heating of the bulkheads or decks on which or next to which they are mounted.

8.2.3 Combustible materials in the vicinity of space heaters are to be protected by suitable incombustible and thermal-insulating materials.

8.3 Heating cables and tapes or other heating elements

8.3.1 Heating cables and tapes or other heating elements are not to be installed in contact with combustible materials. Where they are installed close to such materials, they are to be separated by means of a non-flammable material.

Section 13 High Voltage Installations

1 General

1.1 Field of application

1.1.1 The following requirements apply to a.c. three-phase systems with nominal voltage exceeding 1 kV, the nominal voltage being the voltage between phases.

If not otherwise stated herein, construction and installation applicable to low voltage equipment stated in Part C, Chapter 2 generally apply to high voltage equipment.

1.2 Nominal system voltage

1.2.1 The nominal system voltage is not to exceed 35 kV. The standardised high voltages for equipment are given in Tab 1.

1.3 High-voltage, low-voltage segregation

1.3.1 Equipment with voltage above about 1 kV is not to be installed in the same enclosure as low voltage equipment, unless segregation or other suitable measures are taken to ensure that access to low voltage equipment is obtained without danger.

Table 1 : AC tree-phase systems having a nominal voltage above 1 kV and not exceeding 35 kV and related equipment

Series I			Series II	
Highest voltage for equipment (kV)	Nominal system voltage (kV)		Highest voltage for equipment (kV)	Nominal system voltage (kV)
3,6	3,3	3,0	4,40	4,16
7,2	6,6	6,0	–	–
12,0	11,0	10,0	–	–
–	–	–	13,20**(1)**	12,47**(1)**
–	–	–	13,97**(1)**	13,20**(1)**
–	–	–	14,52	13,80
(17,5)	–	(15,0)	–	–
24,0	22,0	20,0	–	–
–	–	–	26,40**(1)**	24,94**(1)**
36,0**(2)**	33,0**(2)**	–	–	–
–	–	–	36,50**(1)**	34,50**(1)**
40,5**(2)**	–	35,0**(2)**	–	–

(1) These systems are generally four-wire systems.

(2) The unification of these values is under consideration.

Note 1: It is recommended that in any one country the ratio between two adjacent nominal voltages should be not less than two.

Note 2: In a normal system of Series I, the highest voltage and the lowest voltage do not differ by more than approximately ±10% from the nominal voltage of the system. In a normal system of Series II, the highest voltage does not differ by more than +5% and the lowest voltage by more than ±10% φρομ τηε νομιναλ ϖολταγε οφ τηε σψστεμ.

Note 3: These systems are generally three-wire systems unless otherwise indicated. The values indicated are voltages between phases.

Note 4: The values indicated in parentheses should be considered as non-preferred values. It is recommended that these values should not be used for new systems to be constructed in the future.

2 System design

2.1 Distribution

2.1.1 It is to be possible to split the main switchboard into at least two independent sections, by means of at least one circuit breaker or other suitable disconnecting devices, each supplied by at least one generator. If two separate switchboards are provided and interconnected with cables, a circuit breaker is to be provided at each end of the cable.

Services which are duplicated are to be divided between the sections.

2.1.2 It is to be assured that at least one source neutral to ground connection is available whenever the system is in the energised mode. Electrical equipment in neutral earthed systems is to withstand the current due to a single phase fault against earth for the time necessary to trip the protection device.

2.1.3 Means of disconnection are to be fitted in the neutral earthing connection of each generator so that the generator may be disconnected for maintenance and for insulation resistance measurement.

2.1.4 All earthing impedances are to be connected to the hull. The connection to the hull is to be so arranged that any circulating currents in the earth connections do not interfere with radio, radar, communication and control equipment circuits.

2.1.5 Alternators running in parallel may have a common neutral connection to earth provided they are suitably designed to avoid excessive circulating currents.

This is particularly important if the alternators are of different size and make. Alternators in which the third harmonic content does not exceed 5% may be considered adequate.

Note 1: This would mostly occur with a neutral bus with a single grounding resistor with the associated neutral switching. Where individual resistors are used, circulation of the third harmonic currents between paralleled alternators is minimised.

2.1.6 In systems with earthed neutral, resistors or other current-limiting devices for the connection of the neutrals to the hull are to be provided for each section in which the systems are split [2.1.2].

2.2 Degrees of protection

2.2.1 Each part of the electrical installation is to be provided with a degree of protection appropriate to the location, as a minimum the requirements of IEC Publication 61892-2.

2.2.2 The degree of protection of enclosures of rotating electrical machines is to be at least IP 23.

The degree of protection of terminals is to be at least IP 44.

For motors installed in spaces accessible to unqualified personnel, a degree of protection against approaching or contact with live or moving parts of at least IP 4X is required.

2.2.3 The degree of protection of enclosures of transformers is to be at least IP 23.

For transformers installed in spaces accessible to unqualified personnel, a degree of protection of at least IP 4X is required.

For transformers not contained in enclosures, see [7.1].

2.2.4 The degree of protection of metal enclosed switchgear, controlgear assemblies and static converters is to be at least IP 32. For switchgear, control gear assemblies and static converters installed in spaces accessible to unqualified personnel, a degree of protection of at least IP 4X is required.

2.3 Insulation

2.3.1 In general, for non-type tested equipment phase-to-phase air clearances and phase-to-earth air clearances between non-insulated parts are to be not less than those specified in Tab 2.

Intermediate values may be accepted for nominal voltages, provided that the next higher air clearance is observed.

In the case of smaller distances, an appropriate voltage impulse test is to be applied.

Table 2 : Minimum clearances

Rated voltage (kV)	Minimum clearance (mm)
3,0 - 3,3	55
6,0 - 6,6	90
10,0 - 11,0	120

2.3.2 Creepage distances between live parts and between live parts and earthed metal parts are to be in accordance with IEC 60092-503 for the nominal voltage of the system, the nature of the insulation material and the transient overvoltage developed by switch and fault conditions.

2.4 Neutral earthing system

2.4.1 Directly earthed neutral system is not to be used for high voltage installations.

2.4.2 Earthed neutral systems are admitted provided that the earth fault current is limited to an acceptable level, either by inserting an impedance in the neutral connection to earth or by an earthing transformer.

2.4.3 The earthing impedance is to be designed in order that:

a) the resistive current is higher than the network capacitive current in the event of an earth fault, and

b) the maximum earth fault current is limited to a value that the generators and transformers can withstand for a prolonged time without damage to the core (see Note 1), and

c) the prospective earth fault current is at least three times the values of current required to operate any earth fault protective devices.

Note 1: The maximum earthing current is to be discussed with the equipment manufacturer. In the absence of precise values, the values specified in Tab 3 may be taken for guidance.

Table 3 : Recommended maximum earth fault currents

Rated voltage	Generator	Transformer
6,6 kV	20 A per generator	20 A per transformer
11,0 kV	20 A per generator	20 A per transformer

2.4.4 Efficient means are to be provided for detecting defects in the insulation of the system. For systems where the earth fault current exceeds 5 A, automatic tripping devices are to be provided. Where the earth fault current does not exceed 5 A, an indicator may be provided as an alternative to an automatic tripping.

2.4.5 In insulated earth system, any earth fault in the system is to be indicated by means of a visual and audible alarm.

2.4.6 In installations where outgoing feeders are not disconnected in case of an earth fault, the insulation of the equipment is to be designed for the phase-to-phase voltage.

2.5 Protection

2.5.1 Protective devices are to be provided against phase-to-phase faults in the cables connecting the generators to the main switchboard and against interwinding faults within the generators. The protective devices are to trip the generator circuit breaker and to automatically de-excite the generator.

In distribution systems with a neutral earthed, phase-to-earth faults are also to be treated as above.

2.5.2 Power transformers are to be provided with overload and short circuit protection.

When transformers are connected in parallel, tripping of the protective devices on the primary side is to automatically trip the switch connected on the secondary side.

2.5.3 Voltage transformers are to be provided with overload and short circuit protection on the secondary side.

2.5.4 Fuses are not to be used for overload protection.

2.5.5 Lower voltage systems supplied through transformers from high voltage systems are to be protected against overvoltages. This may be achieved by:

a) direct earthing of the lower voltage system

b) appropriate neutral voltage limiters

c) earthed screen between the primary and secondary windings of transformers.

3 Rotating machinery

3.1 Stator windings of generators

3.1.1 Generator stator windings are to have all phase ends brought out for the installation of the differential protection.

3.2 Temperature detectors

3.2.1 Rotating machinery is to be provided with temperature detectors in its stator windings to actuate a visual and audible alarm in a normally attended position whenever the temperature exceeds the permissible limit.

If embedded temperature detectors are used, means are to be provided to protect the circuit against overvoltage.

3.3 Tests

3.3.1 In addition to the tests normally required for rotating machinery, a high voltage test in accordance with IEC Publication 60034-15 is to be carried out on the individual coils in order to demonstrate a satisfactory withstand level of the inter-turn insulation to steep fronted switching surges.

4 Power transformers

4.1 General

4.1.1 Dry type transformers are to comply with IEC Publication 60076-11.

Liquid cooled transformers are to comply with IEC Publication 60076.

Oil immersed transformers are to be provided with the following alarms and protection:

- liquid level (Low) - alarm
- liquid temperature (High) - alarm
- liquid level (Low) - trip or load reduction
- liquid temperature (High) - trip or load reduction
- gas pressure relay (High) - trip.

5 Cables

5.1 General

5.1.1 Cables are to be constructed in accordance with IEC Publication 60092-353 and 60092-354 or other equivalent Standard.

6 Switchgear and controlgear assemblies

6.1 General

6.1.1 Switchgear and controlgear assemblies are to be constructed in accordance with IEC Publication 62271-200 and the following additional requirements.

6.2 Construction

6.2.1 Switchgear is to be of metal-enclosed type in accordance with IEC Publication 62271-200 or of the insulation-enclosed type in accordance with IEC Publication 62271-201.

6.2.2 Withdrawable circuit breakers and switches are to be provided with mechanical locking facilities in both service and disconnected positions. For maintenance purposes, key locking of withdrawable circuit breakers and switches and fixed disconnectors is to be possible.

Withdrawable circuit breakers are to be located in the service position so that there is no relative motion between fixed and moving portions.

6.2.3 The fixed contacts of withdrawable circuit breakers and switches are to be so arranged that in the withdrawable position the live contacts are automatically covered.

Shutters are to be clearly marked for incoming and outgoing circuits. This may be achieved with the used of colours or labels.

6.2.4 For maintenance purposes an adequate number of earthing and short-circuiting devices is to be provided to enable circuits to be worked on in safety.

6.2.5 Switchgear and controlgear assemblies are to be internal arc classified (IAC).

Where swichgear and controlgear are accessible by authorized personnel only, Accessibility Type A is sufficient (IEC 62271-200 Annex AA 2.2). Accessibility Type B is required if accessible by non-authorised personnel.

Installation and location of the switchgear and controlgear is to correspond with its internal arc classification and classified sides (F, L and R).

6.3 Auxiliary systems

6.3.1 If electrical energy and/or physical energy is required for the operation of circuit-breakers and switches, a store supply of such energy is to be provided for at least two operations of all the components.

However, the tripping due to overload or short-circuit, and under-voltage is to be independent of any stored electrical energy sources. This does not preclude shunt tripping provided that alarms are activated upon lack of continuity in the release circuits and power supply failures.

6.3.2 When external source of supply is necessary for auxiliary circuits, at least two external sources of supply are to be provided and so arranged that a failure or loss of one source will not cause the loss of more than one generator set and/or a main switchboard section as described in [2.1.1] and/or set of essential services.

Where necessary one source of supply is to be from the emergency source of electrical power for the start up from dead ship condition.

6.4 High voltage test

6.4.1 A power-frequency voltage test is to be carried out on any switchgear and controlgear assemblies. The test procedure and voltages are to be according to IEC Publication 62271-200, Section 7, Routine tests.

7 Installation

7.1 Electrical equipment

7.1.1 Where equipment is not contained in an enclosure but a room forms the enclosure of the equipment, the access doors are to be so interlocked that they cannot be opened until the supply is isolated and the equipment earthed down.

At the entrance to spaces where high-voltage electrical equipment is installed, a suitable marking is to be placed indicating danger of high voltage. As regards high-voltage electrical equipment installed outside the aforementioned spaces, similar marking is to be provided.

An adequate, unobstructed working space is to be left in the vicinity of high voltage equipment for preventing potential severe injuries to personnel performing maintenance activities. In addition, the clearance between the switchboard and the ceiling / deckhead above is to be meet the requirements of the Internal Arc Classification according to IEC 62271-200. See [6.2.5].

7.2 Cables

7.2.1 In accommodation spaces, high voltage cables are to be run in enclosed cable transit systems.

7.2.2 High voltage cables are to be segregated from cables operating at different voltage ratings; in particular, they are not to be run in the same cable bunch, in the same ducts or pipes, or in the same box.

Where high voltage cables of different voltage ratings are installed on the same cable tray, the air clearance between cables is not to be less than the minimum air clearance for the higher voltage side in [2.3.1]. However, high voltage cables are not to be installed on the same cable tray for cables operating at the nominal system voltage of 1 kV and less.

7.2.3 High voltage cables are generally to be installed on cable trays when they are provided with a continuous metallic sheath or armour which is effectively bonded to earth; otherwise, they are to be installed for their entire length in metallic castings effectively bonded to earth.

7.2.4 Terminations in all conductors of high voltage cables are, as far as practicable, to be effectively covered with suitable insulating material. In terminal boxes, if conductors are not insulated, phases are to be separated from earth and from each other by substantial barriers of suitable insulating materials.

High voltage cables of the radial field type, i.e. having a conductive layer to control the electric field within the insulation, are to have terminations which provide electric stress control.

Terminations are to be of a type compatible with the insulation and jacket material of the cable and are to be provided with means to ground all metallic shielding components (i.e. tapes, wires, etc.).

7.2.5 High voltage cables are to be readily identifiable by suitable marking.

7.2.6 Before a new high voltage cable installation, or an addition to an existing installation, is put into service, a voltage withstand test is to be satisfactorily carried out on each completed cable and its accessories.

The test is to be carried out after an insulation resistance test.

For cables with rated voltage (Uo/U) above 1,8/3 kV (Um = 3,6 kV) an a.c. voltage withstand test may be carried out upon advice from high voltage cable manufacturer. One of the following test is to be used:

- test for 5 minutes with the phase to phase voltage of the system applied between the conductor and the metallic screen/sheath
- test for 24 hours with the normal operating voltage of the system. Alternatively, a d.c. test voltage equal to 4 Uo may be applied for 15 minutes.

For cables with rated voltage (Uo/U) up to 1,8/3 kV (Um = 3,6 kV) an d.c. voltage equal to 4 Uo is to be applied for 15 minutes.

7.2.7 After completion of the test, the conductors are to be connected to earth for a sufficient period in order to remove any trapped electric charge.

An insulation resistance test is then repeated.

Section 14 Communications, Safeties and Alarms

1 General

1.1

1.1.1 Equipment, systems and installation designed on computer based architectures are to comply with requirements of Ch 3, Sec 3.

2 General emergency alarm system

2.1 General

2.1.1 Each unit is to be provided with a general alarm system so installed as to be clearly perceptible in all parts of the unit, including open decks.

Alarm signal devices are to be provided which will produce a distinctive and strong note.

The signals used should be limited to: general emergency, toxic gas (hydrogen sulphide), combustible gas, fire alarm, and abandon unit signals. These signals should be described in the muster list and operations manual.

Control stations for activating the alarm should be installed to the satisfaction of the Society.

2.1.2 The general alarm is to be capable of being operated at least from the following spaces:

- main control station
- drilling console
- navigating bridge (if any), and
- fire control station (if any).

2.1.3 An electrically operated bell or klaxon or other equivalent warning system installed in addition to the ship's whistle or siren, for sounding the general emergency alarm signal, is to comply with the requirements of this sub-article.

2.1.4 The general emergency alarm system is to be supplemented by either instructions over the public address system complying with the requirements in [3.1] or other suitable means of communication.

2.1.5 Entertainment sound system is to be automatically turned off when the general alarm system is activated.

2.1.6 The system is to be continuously powered and is to have an automatic change-over to a standby power supply in case of loss of normal power supply.

An alarm is to be given in the event of failure of the normal power supply.

2.1.7 The system is to be powered by means of two circuits, one from the unit's main supply and the other from the emergency source of electrical power required by Ch 2, Sec 3, [3.1] and Ch 2, Sec 3, [5.4].

2.1.8 The system is to be capable of operation from the central control room, the navigation bridge (if provided) and, except for the unit’s whistle, also from other strategic points.

Note 1: Other strategic points are taken to mean those locations, other than the navigation bridge and/or the central control room, from where emergency situations are intended to be controlled and the general alarm system can be activated. A fire control station or a cargo control station should normally be regarded as strategic points.

2.1.9 The alarm is to continue to function after it has been triggered until it is manually turned off or is temporarily interrupted by a message on the public address system.

2.1.10 The alarm system is to be audible throughout all the accommodation and normal crew working spaces.

2.1.11 The minimum sound pressure level for the emergency alarm tone in interior and exterior spaces is to be 80 dB (A) and at least 10 dB (A) above ambient noise levels occurring during normal equipment operation with the ship underway in moderate weather.

2.1.12 In cabins without a loudspeaker installation, an electronic alarm transducer, e.g. a buzzer or similar, is to be installed.

2.1.13 The sound pressure level at the sleeping position in cabins and in cabin bathrooms is to be at least 75 dB (A) and at least 10 dB (A) above ambient noise levels.

2.1.14 For cables used for the general emergency alarm system, see Ch 2, Sec 3, [11.6].

2.1.15 Areas with a noise level above 85 dB (A) shall also be covered with visual indication of the announcement.

3 Public address system

3.1 General

3.1.1 A public address system is to be provided supplementing general alarm system.

The public address system is to have the priority on the general alarm system.

3.1.2 The public address system is to be a loudspeaker installation enabling the broadcast of messages into all spaces where personnel are normally present and muster stations.

3.1.3 The system is to allow for the broadcast of messages from the following locations (if provided): navigation bridge, central control room, emergency response centre, engine control room, ballast control station, jacking control station and drilling console.

3.1.4 The system is to be protected against unauthorised use.

3.1.5 The system is to be installed with regard to acoustically marginal conditions and not require any action from the addressee.

3.1.6 The minimum sound pressure levels for broadcasting emergency announcements are to be:

a) in interior spaces: 75 dB (A) and at least 20 dB (A) above the speech interference level

b) in exterior spaces: 80 dB (A) and at least 15 dB (A) above the speech interference level.

With respect to cabin/state rooms, the sound pressure level is to be attained as required inside such spaces during sea trials.

3.1.7 Audible alarm signals shall not exceed 120 dB (A).

3.1.8 In spaces such as under deck passageways, bosun's locker, hospital and pump rooms, the public address system is/may not be required.

3.1.9 Where the public address system is used to supplement the general emergency alarm system as per [2.1.4], it is to be continuously powered from the emergency source of electrical power required by Ch 2, Sec 3, [3.1] and Ch 2, Sec 3, [5.4].

3.1.10 Where an individual loudspeaker has a device for local silencing, an override arrangement from the control station(s), including the navigating bridge, is to be in place.

4 Combined general emergency alarm-public address system

4.1 General

4.1.1 Where the public address system is the only means for sounding the general emergency alarm signal and the fire alarm, in addition to the requirements of [2.1] and [3.1], the following are to be satisfied:

- the system automatically overrides any other non emergency input system when an emergency alarm is required
- the system automatically overrides any volume control provided to give the required output for the emergency mode when an emergency alarm is required
- the system is arranged to prevent feedback or other interference
- the system is arranged to minimise the effect of a single failure so that the alarm signal is still audible (above ambient noise levels) also in the case of failure of any one circuit or component, by means of the use of:
  - multiple amplifiers
  - segregated cable routes to public rooms, alleyways, stairways and control stations
  - more than one device for generating electronic sound signal
  - electrical protection for individual loudspeakers against short-circuits.

5 Fire alarm and gas detection systems

5.1 Fire alarm system

5.1.1 Fire alarm system, equipment and power supplies are defined in Ch 4, Sec 5, [3].

5.2 Gas detection system

5.2.1 Gas detection system requirements are defined in Ch 4, Sec 5, [4].

6 Internal communications

6.1 General

6.1.1 All types of units are to be fitted with efficient means of communication between the central control room, the navigation bridge (if provided) and all spaces where action may be necessary in case of emergency.

6.1.2 An engineers' alarm is to be provided to be operated from the engine control room or at the manoeuvring platform, as appropriate, and clearly audible in the engineers' accommodation. Alternative means, such as internal communication system may be accepted, at the satisfaction of the Society.

7 Helicopter communications

7.1 General

7.1.1 In order to ensure communication with helicopters, units serviced by helicopters should carry an aeromobile VHF radiotelephone station complying with the relevant requirements of ICAO.

Section 15 Specific Requirements for Electrical Installations in Hazardous Areas

1 Application

1.1 General

1.1.1 The present Section is applicable to electrical systems of units and installations including hazardous areas, as defined by the Society's Rules for Classification applicable to the unit or installation considered, in addition to other applicable requirements of the present Rules.

1.1.2 Where reference is made to “certified safe type equipment”, it means electrical equipment for which satisfactory guarantees are furnished to the appropriate authorities concerning the safety of its operation in the flammable atmosphere(s) concerned.

Such guarantees shall be supplied in the form of test certificates, certificates of conformity or equivalent documentation issued by independent and competent authority and established on a basis at least equivalent to that IEC 60079 series publications.

1.2 References to other regulations and standards

1.2.1 The Society may refer to other regulations and standards when deemed necessary. These include the IEC publications, notably the IEC 61892-7 and IEC 60079.

2 Electrical systems

2.1 General

2.1.1 Electrical equipment and wiring are not to be installed in hazardous areas unless essential for operational purposes or safety enhancement. Where necessary, they are to comply with the requirements specified in this Section.

2.1.2 Where electrical equipment is permitted in hazardous areas, all switches and protective devices are to interrupt all poles or phases and, where practicable, to be located in a non-hazardous area unless specifically permitted otherwise.

Such switches and equipment located in hazardous areas are to be suitably labelled for identification purposes.

2.2 Distribution systems and protection

2.2.1 If a power system with directly earthed neutral is used, it is to be of type TN-S with separate neutral and protective conductor. The neutral and the protective conductor are not to be connected together, or combined in a single conductor in a hazardous area.

Power system of type TN-C, having combined neutral and protective functions in a single conductor throughout the system, is not allowed in hazardous areas.

2.2.2 The electrical circuits and apparatus in hazardous areas, except intrinsically safe circuits and apparatus, are to be provided with means to ensure disconnection in the shortest practical time in the event of overload or short-circuit.

2.2.3 The electrical systems located in hazardous areas are to be further protected against earth fault as follows:

a) IT system: alarm or automatic disconnection

b) IT system with impedance earthed neutral: automatic disconnection in the shortest practical time

c) TN-S system: automatic disconnection in the shortest practical time.

2.2.4 For installation in Zone 0, the following precautions are to be considered:

a) earth fault currents in magnitude and duration is to be limited

b) installation is to be disconnected instantaneously in case of the first fault, either by the insulation monitoring device or by a residual current device.

2.2.5 In insulated distribution systems, no current carrying part is to be earthed, other than:

a) through an insulation level monitoring device

b) through components used for the suppression of interference in radio circuits.

3 Emergency conditions

3.1 General

3.1.1 In view of exceptional conditions in which the explosion hazard may extend outside the zones specified in Ch 4, Sec 3, special arrangements are to be provided to facilitate the selective disconnection or shutdown of the:

- ventilation systems
- all electrical equipment outside Zone 1 areas, except where of a certified safe type for Zone 1 applications
- main electrical generator and prime movers
- emergency equipment except those items listed in Ch 2, Sec 3, [3.4.1]
- emergency generators

3.1.2 Disconnection or shutdown is to be possible from at least two strategic locations, one of which is to be outside the hazardous areas.

3.1.3 Shutdown system provided in accordance with [3.1.1] is to be so designed that the risk of unintentional stoppages caused by malfunction in a shutdown system and the risk of inadvertent operation of shutdown are minimized.

3.1.4 Initiation of the foregoing shutdown of facilities will be the operator's responsibility. The initiated action may vary according to the nature of the emergency. A recommended sequence of shutdowns should be included in the Operating Booklet.

3.1.5 Equipment to remain operational after emergency shutdown

Equipment which is located in spaces other than enclosed spaces and arranged to be operated after complete shutdown as given [3.1.1] is to be suitable for installation in Zone 2 locations. Such equipment, when located in enclosed spaces, is to be suitable for its intended application to the satisfaction of the Society.

The equipment which is to be operable after an emergency shutdown is listed in Ch 2, Sec 3, [3.4.1].

4 Selection of electrical equipment

4.1 General

4.1.1 Electrical equipment installed in hazardous area should satisfied the following requirements:

- to be of a type which will not ignite the mixture concerned
- to be appropriate to the space concerned, and
- to be of an appropriate certified safe type for operation in the vapours or gases likely to be encountered.

4.1.2 Selection of certified safe type equipment is to be made with due consideration given to:

- classification of the hazardous area (see Ch 4, Sec 3, [2])
- temperature class
- explosion group.

Note 1: For some type of protection, for example increased safety, pressurization, oil-immersion and sand-filling, only the area classification and ignition temperature are required.

4.1.3 Flammable gases and vapours are classified in explosion group IIA, IIB or IIC, and in six temperature classes, from T1 to T6, according to the international classification of the International Electrotechnical Commission.

4.1.4 The explosion group and temperature class of electrical equipment of a certified safe type are to be at least IIA and T3.

Note 1: The certification ratings specified by this requirement are valid only for gases emanating from hydrocarbon products.

4.2 Selection according to zones

4.2.1 For electrical equipment installed in Zone 0 hazardous areas, only the following types are permitted:

- certified intrinsically-safe apparatus Ex(ia)
- simple electrical apparatus and components (e.g. thermocouples, photocells, strain gauges, junction boxes, switching devices), included in intrinsically-safe circuits of category "ia" not capable of storing or generating electrical power or energy in excess of limits stated in the relevant Rules
- equipment specifically designed and certified by the appropriate Authority for use in Zone 0.

4.2.2 For electrical equipment installed in Zone 1 hazardous areas, only the following types are permitted:

- any type that may be considered for Zone 0
- certified intrinsically-safe apparatus Ex(ib)
- simple electrical apparatus and components (e.g. thermocouples, photocells, strain gauges, junction boxes, switching devices), included in intrinsically-safe circuits of category "ib" not capable of storing or generating electrical power or energy in excess of limits stated in the relevant rules)
- certified flameproof Ex(d)
- certified pressurised Ex(p)
- certified increased safety Ex(e)
- certified encapsulated Ex(m)
- certified sand filled Ex(q)
- certified oil immersion Ex(o)
- through runs of cables.

Note 1: A simple apparatus is a device whose electrical parameters, according to the manufacturer's specification, do not exceed any of the values 1.2 V, 0.1 A, 20 or 25 mW. It is considered intrinsically safe as it is not capable of igniting an explosive atmosphere and does need not to be certified or marked. It is subject however to the requirements of the different parts of IEC 60079 if it is connected to a device which contains a source of energy (mains supply, battery or accumulator) which could cause the circuit to exceed these values.

Note 2: The use of Ex(o) is to be limited for fixed apparatuses and is not to be used for portable apparatuses.

4.2.3 For electrical equipment installed in Zone 2 hazardous areas, only the following types are permitted:

- any type that may be considered for Zone 1
- tested specially for Zone 2 (e.g. type "n" protection)
- the type which ensures the absence of sparks and arcs and of "hot spots" during its normal operation, as specified in IEC61892-7
- special protection Ex(s) (apparatus not conforming with IEC 60079 may be considered safe by a national or other authorised body for use in potentially explosive atmosphere).

4.2.4 Where an apparatus incorporates a number of types of protection, it is to be ensured that all are suitable for use in the zone in which it is located.

5 Installation requirements

5.1 Electrical cables

5.1.1 All cables installed in hazardous areas are to be sheathed with a non-metallic impervious sheath in combination with braiding or other metallic covering for earth fault detection and mechanical protection.

Note 1: Braiding and other metallic covering may be excluded from cables installed in Zone 2.

5.1.2 Cables of intrinsically safe circuits are to have a metallic shielding with at least a non-metallic external impervious sheath.

5.1.3 The circuits of a category "ib" intrinsically safe system are not to be contained in a cable associated with a category "ia" intrinsically safe system required for a hazardous area in which only category "ia" systems are permitted.

5.1.4 Cables of intrinsically safe circuits are to be separated from the cables of all other circuits (minimum 50 mm).

5.1.5 In situations where there is an exceptional risk of mechanical damages, for example in storage cargo landing area, cables are to be protected by steel casing, trunking or conduits, even when armoured, if the unit's structure or attached parts do not afford sufficient protection for cables.

5.1.6 Cable runs in hazardous areas are, where practicable, to be uninterrupted. Where discontinuities cannot be avoided, the joint is to comply with the requirements specified in IEC61892-7.

5.1.7 The connection of cables and conduits to the electrical apparatuses are to be made in accordance with the requirements of the relevant type of protection.

5.1.8 Unused openings for cables or conduits entries in electrical apparatuses are to be closed with blanking elements suitable for the relevant type of protection and certified for the installation in the considered zone.

5.1.9 The hazardous area end of each unused core in multi-core cables is to be either connected to earth or adequately insulated by means of suitable terminations.

5.2 Earthing and bonding

5.2.1 All metallic protective coverings of power and lighting cables passing through a hazardous zone, or connected to apparatus in such zone, are to be earthed at least at their ends. The metallic covering of all other cables is to be earthed at least at one end.

5.2.2 To avoid dangerous sparking between metallic parts of structures, potential equalization is always required for installations in hazardous areas. All exposed and extraneous conductive parts are to be connected to the equipotential bonding system. The bonding system may include protective conductors, conduits, metal cable sheaths, steel wire armouring and metallic parts of structures, but is not to include neutral conductors. Connections are to be secured against self-loosening.

5.2.3 Exposed conductive parts need not be separately connected to the equipotential bonding system if they are firmly secured to and are in metallic contact with structural parts or piping which are connected to the equipotential bonding system. Extraneous conductive parts which are not part of the structure of the electrical installation need not be connected to the equipotential bonding system, if there is no danger of voltage displacement, for example frames of doors or windows.

5.2.4 The hazard of an incentive discharge due to the build-up of static electricity resulting from the flow of liquid/ gases/vapours can be avoided if the resistance between the storage tanks/process plant/piping systems and the structure of the unit or installation is less than 10^6 Ω..

5.2.5 Bonding straps are required for cargo tanks/process plant/piping systems which are not permanently connected to the structure of the unit or installation; this may be omitted where storage tanks/process plant/piping systems are directly or via their supports, either welded or bolted to the structure of the unit or installation.

5.2.6 Bonding straps are to be visible and protected against mechanical damage as far as possible.

5.3 Electromagnetic radiation

5.3.1 The effects of strong electromagnetic radiation are to be considered. Precautions are to be taken to prevent electromagnetic waves radio-frequency transmitters, such as radio and radars, to induce electric currents and voltages in any conductive structure.

The siting of aerials and associated parts is to be selected in relation with the location of any gas and vapour outlets.

Note 1: IEC 60533 and CLC/TR 50426:2004 may be used for guidance.

6 Miscellaneous installations

6.1 Electrical installations in battery rooms

6.1.1 Only intrinsically safe equipment and lighting fittings may be installed in compartments assigned solely to large vented storage batteries; see Ch 2, Sec 11, [6.2].

The associated switches are to be installed outside such spaces.

Electric ventilator motors are to be outside ventilation ducts and, if within 3 m of the exhaust end of the duct, they are to be of an explosion-proof safe type. The impeller of the fan is to be of the non-sparking type.

Overcurrent protective devices are to be installed as close as possible to, but outside of, battery rooms.

Electrical cables other than those pertaining to the equipment arranged in battery rooms are not permitted.

6.1.2 Electrical equipment for use in battery rooms is to have minimum explosion group IIC and temperature class T1.

6.1.3 Standard marine electrical equipment may be installed in compartments assigned solely to valve-regulated sealed storage batteries.

6.2 Electrical installations in paint stores

6.2.1 General

Electrical equipment is to be installed in paint stores and in ventilation ducts serving such spaces only when it is essential for operational services.

Certified safe type equipment of the following type is acceptable:

- certified intrinsically-safe apparatus Ex(i)
- certified flameproof Ex(d)
- certified pressurised Ex(p)
- certified increased safety Ex(e)
- certified specially Ex(s).

Cables (through runs or termination cables) of armoured type or installed in metallic conduits are to be used.

6.2.2 In the areas on open deck within 1 m of inlet and exhaust ventilation openings of paint stores or within 3 m of exhaust mechanical ventilation outlets of such spaces, the following electrical equipment may be installed:

- electrical equipment with the type of protection as permitted in paint stores
- equipment of protection class Ex(n)
- appliances which do not generate arcs in service and whose surface does not reach unacceptably high temperature
- appliances with simplified pressurised enclosures or vapour-proof enclosures (minimum class of protection IP55) whose surface does not reach unacceptably high temperature or
- cables as specified in [6.2.1].

6.2.3 Minimum requirements

The minimum requirements for the certified safe type equipment are as follows:

- explosion group II B
- temperature class T3.

6.2.4 Switches, protective devices and motor control gear of electrical equipment installed in a paint store are to interrupt all poles or phases and are preferably to be located in a non-hazardous space.

6.3 Electrical installations in stores for welding gas (acetylene) bottles

6.3.1 The following equipment may be installed in stores for welding gas bottles provided that it is of a safe type appropriate for Zone 1 area installation:

- lighting fittings
- ventilator motors, where provided.

6.3.2 Electrical cables other than those pertaining to the equipment arranged in stores for welding gas bottles are not permitted.

6.3.3 Electrical equipment for use in stores for welding gas bottles is to have minimum explosion group IIC and temperature class T2.

7 Inspection and maintenance

7.1 Maintenance or modification of safety electrical apparatus

7.1.1 It is reminded that, in pursuance of Rules for Classification, checking, maintaining, or reconditioning of safety apparatus where necessary, are to be carried out at the care of users, in accordance with the requirements of the IEC Publication 60079-17.

7.1.2 Any modification is to be the subject of a new certification by an independent competent institution. It is to be reported with necessary documentation to the Society, in accordance with the requirements of the IEC Publication 60079-17.

Section 16 Propulsion Plant

1 Design requirements

1.1 General

1.1.1 Requirements for propulsion systems of mobile offshore units are given in the Ship Rules, Part C, Chapter 2 and Part C, Chapter 3, as far as electrical installations and control systems of propulsion engines, variable speed pitch propellers and steering gear systems are concerned, regarding the following items:

- main power supply
- emergency conditions: power supply and communications
- local and remote control
- essential services dedicated to propulsion and steering
- electrical propulsion systems.

Section 17 Testing

1 General

1.1 Rule application

1.1.1 Before a new installation, or any alteration or addition to an existing installation, is put into service, the electrical equipment is to be tested in accordance with [3], [4] and [5], to the satisfaction of the Surveyor in charge.

1.2 Insulation-testing instruments

1.2.1 Insulation resistance may be measured with an instrument applying a voltage of at least 500 V. The measurement will be taken when the deviation of the measuring device is stabilised.

Note 1: Any electronic devices present in the installation are to be disconnected prior to the test in order to prevent damage.

1.2.2 For high voltage installation, the measurement is to be taken with an instrument applying a voltage adapted to the rated value and agreed with the Society.

2 Type approved components

2.1

2.1.1 The following components are to be type approved or in accordance with [2.1.2]:

- electrical cables
- transformers
- rotating machines
- electrical converters for primary essential services
- switching devices (circuit-breakers, contactors, disconnectors, etc.) and overcurrent protective devices
- sensors, alarm panels, electronic protective devices, automatic and remote control equipment, actuators, safety devices for installations intended for essential services, electronic speed regulators for auxiliary engines
- computers used for tasks essential to safety
- cable trays or protective casings made of plastics materials (thermoplastic or thermosetting plastic materials)
- all components related to safety functions.

2.1.2 Case by case approval based on submission of adequate documentation and execution of tests may also be granted at the discretion of the Society.

3 Insulation resistance

3.1 Lighting and power circuits

3.1.1 The insulation resistance between all insulated poles (or phases) and earth and, where practicable, between poles (or phases), is to be at least 1 MΩ in ordinary conditions.

The installation may be subdivided to any desired extent and appliances may be disconnected if initial tests give results less than that indicated above.

3.2 Internal communication circuits

3.2.1 Circuits operating at a voltage of 50 V and above are to have an insulation resistance between conductors and between each conductor and earth of at least 1 MΩ.

3.2.2 Circuits operating at voltages below 50 V are to have an insulation resistance between conductors and between each conductor and earth of at least 0,33 MΩ.

3.2.3 If necessary, any or all appliances connected to the circuit may be disconnected while the test is being conducted.

3.3 Switchboards

3.3.1 The insulation resistance between each busbar and earth and between each insulated busbar and the busbar connected to the other poles (or phases) of each main switchboard, emergency switchboard, section board, etc. is to be not less than 1 MΩ.

3.3.2 The test is to be performed before the switchboard is put into service with all circuit-breakers and switches open, all fuse-links for pilot lamps, earth fault-indicating lamps, voltmeters, etc. removed and voltage coils temporarily disconnected where otherwise damage may result.

3.4 Generators and motors

3.4.1 The insulation resistance of generators and motors, in normal working condition and with all parts in place, is to be measured and recorded.

3.4.2 The test is to be carried out with the machine hot immediately after running with normal load.

3.4.3 The insulation resistance of generator and motor connection cables, field windings and starters is to be at least 1 MΩ.

4 Earth

4.1 Electrical constructions

4.1.1 Tests are to be carried out, by visual inspection or by means of a tester, to verify that all earth-continuity conductors and earthing leads are connected to the frames of apparatus and to the hull, and that in socket-outlets having earthing contacts, these are connected to earth.

4.2 Metal-sheathed cables, metal pipes or conduits

4.2.1 Tests are to be performed, by visual inspection or by means of a tester, to verify that the metal coverings of cables and associated metal pipes, conduits, trunking and casings are electrically continuous and effectively earthed.

5 Operational tests

5.1 Generating sets and their protective devices

5.1.1 Generating sets are to be run at full rated load to verify that the following are satisfactory:

- electrical characteristics
- commutation (if any)
- lubrication
- ventilation
- noise and vibration level.

5.1.2 Suitable load variations are to be applied to verify the satisfactory operation under steady state and transient conditions (see Ch 2, Sec 4, [2]) of:

- voltage regulators
- speed governors.

5.1.3 Generating sets intended to operate in parallel are to be tested over a range of loading up to full load to verify that the following are satisfactory:

- parallel operation
- sharing of the active load
- sharing of the reactive load (for a.c. generators).

Synchronising devices are also to be tested.

5.1.4 The satisfactory operation of the following protective devices is to be verified:

- overspeed protection
- overcurrent protection (see Note 1)
- load-shedding devices
- any other safety devices.

For sets intended to operate in parallel, the correct operation of the following is also to be verified:

- reverse-power protection for a.c. installations (or reverse-current protection for d.c. installations)
- minimum voltage protection.

Note 1: Simulated tests may be used to carry out this check where appropriate.

5.1.5 The satisfactory operation of the emergency source of power and of the transitional source of power, when required, is to be tested. In particular, the automatic starting and the automatic connection to the emergency switchboard, in case of failure of the main source of electrical power, are to be tested.

5.2 Switchgear

5.2.1 All switchgear is to be loaded and, when found necessary by the attending Surveyor, the operation of overcurrent protective devices is to be verified (see Note 1).

Note 1: The workshop test is generally considered sufficient to ensure that such apparatus will perform as required while in operation.

5.2.2 Short-circuit tests may also be required at the discretion of the Society in order to verify the selectivity characteristics of the installation.

5.3 Safety systems

5.3.1 Satisfactory operation of all functions of the following safety systems are to be verified:

- fire and gas detection system
- emergency shutdown system
- control and monitoring systems.

5.4 Consuming devices

5.4.1 Electrical equipment is to be operated under normal service conditions (though not necessarily at full load or simultaneously) to verify that it is suitable and satisfactory for its purpose.

5.4.2 Motors and their starters are to be tested under normal operating conditions to verify that the following are satisfactory:

- power
- operating characteristics
- commutation (if any)
- speed
- direction of rotation
- alignment.

5.4.3 The remote stops foreseen are to be tested.

5.4.4 Lighting fittings, heating appliances etc. are to be tested under operating conditions to verify that they are suitable and satisfactory for their purposes (with particular regard to the operation of emergency lighting).

5.5 Communication systems

5.5.1 Communication systems, under the condition stated in Ch 2, Sec 14 are to be tested to verify their suitability.

5.6 Installations in areas with a risk of explosion

5.6.1 Installations and the relevant safety certification are to be examined to ensure that they are of a type permitted in the various areas and that the integrity of the protection concept has not been impaired.

5.7 Voltage drop

5.7.1 Where it is deemed necessary by the attending Surveyor, the voltage drop is to be measured to verify that the permissible limits are not exceeded (see Ch 2, Sec 3, [11.11.4]).

Appendix 1 Indirect Test Method for Synchronous Machines

1 General

1.1 Test method

1.1.1 The machine is to be subject to the three separate running tests specified below (see Fig 1) when it is complete (with covers, heat exchangers, all control devices and sensors), the exciter circuit is connected to its normal supply or to a separate supply having the same characteristics, and the supply is fitted with the necessary measuring instruments:

- Test No. 1: No load test at rated voltage and current on rotor, stator winding in open circuit. The temperature rise of the stator winding depends, in such case, on the magnetic circuit losses and mechanical losses due to ventilation, where:
  - Δts1 is the stator temperature rise
  - Δtr1 is the rotor temperature rise.
- Test No. 2: Rated stator winding current with the terminals short-circuited. The temperature of the stator winding depends on the thermal Joule losses and mechanical losses, as above, where:
  - Δts2 is the stator temperature rise
  - Δtr2 is the rotor temperature rise, which for test No. 2 is negligible.
- Test No. 3: Zero excitation. The temperature of all windings depends on the mechanical losses due to friction and ventilation, where:
  - Δts3 is the stator temperature rise
  - Δtr3 is the rotor temperature rise.

Note 1: The synchronous electric motor is supplied at its rated speed by a driving motor. The temperature balance will be considered as being obtained, when the temperature rise does not vary by more than 2°C per hour.

1.1.2 Temperature measurements of the stator winding can be based on the use of embedded temperature sensors or measurement of winding resistance. When using the resistance method for calculation of the temperature rise, the resistance measurement is to be carried out as soon as the machine is shut down.

The rotor temperature rise is obtained by calculation of rotor resistance, Rrotor = U/Ir , where U and I are the voltage and current in the magnetic field winding.

The following parameters are recorded, every 1/2 hour:

- temperature sensors as well as the stator current and voltage
- the main field voltage and current
- the bearing temperatures (embedded sensor or thermometer), and the condition of cooling of the bearings, which are to be compared to those expected on board.

Figure 1 : Schematic diagram used for the test

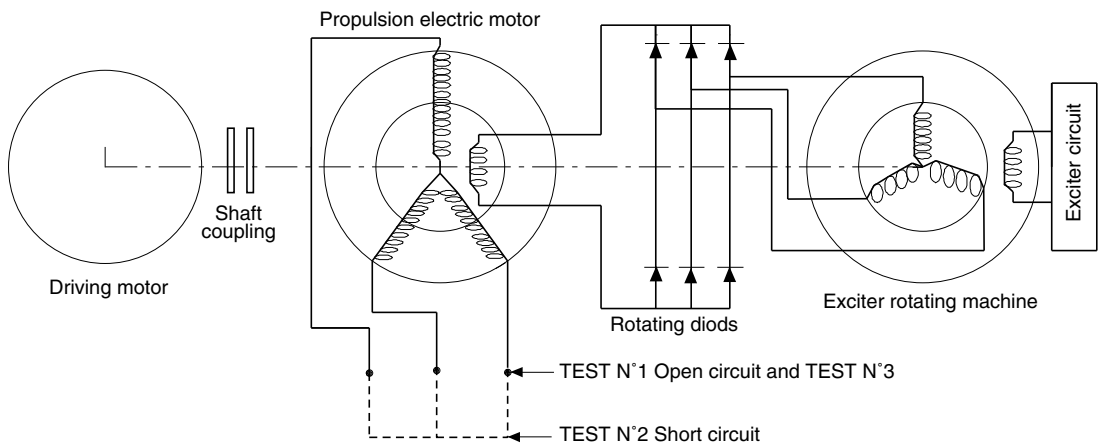

1.1.3 The tests described above allow the determination of the final temperature rise of stator and rotor windings with an acceptable degree of accuracy.

- The temperature rise of the stator winding is estimated as follows:

  Δt stator = $\Delta ts1 + \Delta ts2 - \Delta ts3$

  Δt stator winding is to be corrected by the supplementary temperature rise due to current harmonics evaluated by the manufacturer
- Considering that in test No. 1 the magnetic field winding current Irt is different from the manufacturer's estimated value Ir (due to the fact that the cos φ in operation is not equal to 1), the temperature rise of the rotor is to be corrected as follows:

  Δt rotor = $(\Delta tr1 - \Delta tr3)$ x (rated loading conditions Ir/ test loading conditions Irt)^2 + $\Delta tr3$

1.1.4 In the indirect method, a possible mutual influence of the temperature rise between the stator and the rotor is not taken into consideration. The test results may be representative of the temperature rise on board ship, but a margin of 10 to 15°C is advisable compared with the permitted temperature of the Rules and the measure obtained during tests.

Appendix 2 Indirect Test Method for Induction Machines (Static Torque Method)

1 General

1.1 Test method

1.1.1 The induction machine is to be subject to the three separate tests specified in Tab 1 when it is completely assembled (with covers, heat exchangers, all control devices and sensors).

1.1.2 Temperature measurements of the stator winding is based on the use of embedded temperature sensors. The stator temperature taken into account for the temperature rise is the average of all sensors values.

The following parameters are recorded, every 1/2 hour:

- temperature sensors as well as the stator current and voltage
- bearing temperatures (embedded sensor or thermometer), and the condition of cooling of the bearings, which are to be compared to those expected on board.

1.1.3 The tests described in Tab 1 allow the determination of the final temperature rise of stator windings with an acceptable degree of accuracy.

The stator temperature rise Δt_{stator} is the average of embedded temperature sensors values minus cooling element temperature:

$$\Delta t_{stator} = \Delta\theta_1 - \Delta\theta_2 + \Delta\theta_3$$

where:

$\Delta\theta_1$: Stator temperature rise of Test 1 defined in Tab 1

$\Delta\theta_2$: Stator temperature rise of Test 2 defined in Tab 1

$\Delta\theta_3$: Stator temperature rise of Test 3 defined in Tab 1.

Table 1 : Tests for induction machines

Test 1	Test 2	Test 3
Rotor locked (see Fig 1), machine ventilated in normal condition with stator supplied by rated current at reduced voltage and frequency	Rotor running at no-load with stator supplied at the same voltage and frequency as Test 1	Rotor running at no-load at rated speed with stator supplied at rated voltage and rated frequency

Figure 1 : Heating Test 1

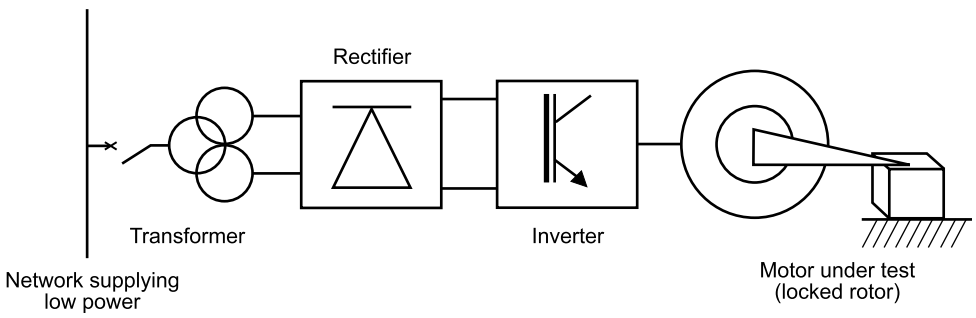

Part C
Facilities

CHAPTER 3
CONTROL SYSTEMS AND AUTOMATION

Section 1 General Requirements

1 General

1.1 Field of application

1.1.1 The following requirements apply to automation systems, installed on all units, intended for essential services as defined in Ch 2, Sec 1. They also apply to systems required in Part C, Chapter 1 and Part C, Chapter 2, installed on all units.

1.1.2 This chapter is intended to avoid that failures or malfunctions of automation systems associated with essential and non-essential services cause danger to other essential services.

1.1.3 Requirements for unattended machinery spaces and for additional notations **AUTO** are specified in Ch 3, Sec 7.

1.2 Regulations and standards

1.2.1 The regulations and standards applicable are those defined in Ch 2, Sec 1.

1.3 Definitions

1.3.1 Unless otherwise stated, the terms used in this Chapter have the definitions laid down in Ch 2, Sec 1 or in the IEC standards. The following definitions also apply:

- Alarm indicator:

  Indicator which gives a visible and/or audible warning upon the appearance of one or more faults to advise the operator that his attention is required.
- Alarm system:

  System intended to give a signal in the event of abnormal running condition.
- Application software:

  Software performing tasks specific to the actual configuration of the computer based system and supported by the basic software.
- Automatic control:

  Control of an operation without direct or indirect human intervention, in response to the occurrence of predetermined conditions.
- Automation systems:

  Systems including control systems and monitoring systems.
- Basic software:

  The minimum software, including firmware and middleware, required to support the application software.
- Cold standby system:

  Duplicated system with a manual commutation or manual replacement of cards which are live and non-operational. The duplicated system is to be able to achieve the operation of the main system with identical performance, and be operational within 10 minutes.
- Computer based system:

  System of one or more computers, associated software, peripherals and interfaces, and the computer network with its protocol.
- Control station:

  Group of control and monitoring devices by means of which an operator can control and verify the performance of equipment.
- Centralized control:

  Control of all operations of a controlled system from one central control position.
- Control system:

  System by which an intentional action is exerted on an apparatus to attain given purposes.
- Data communication links include local area networks, instrument networks and other means which share a communication medium.
- Expert system:

  Intelligent knowledge-based system that is designed to solve a problem with information that has been compiled using some form of human expertise.

- Fail safe:

  Design property of an item in which the specified failure mode is predominantly in a safe direction with regard to the safety of the unit, as a primary concern.
- Full redundant:

  Used to describe an automation system comprising two (identical or non-identical) independent systems which perform the same function and operate simultaneously.
- Hot standby system:

  Used to describe an automation system comprising two (identical or non-identical) independent systems which perform the same function, one of which is in operation while the other is on standby with an automatic change-over switch.
- Instrumentation:

  Sensor or monitoring element.
- Integrated system:

  System consisting of two or more subsystems having independent functions connected by a data transmission network and operated from one or more workstations.
- Local control:

  Control of an operation at a point on or adjacent to the controlled switching device.
- Monitoring system:

  System designed to observe the correct operation of the equipment by detecting incorrect functioning (measure of variables compared with specified value).
- Safety system:

  System intended to limit the consequence of failure and activated automatically when an abnormal condition appears.
- Software:

  Program, procedures and associated documentation pertaining to the operation of the computer system.
- Redundancy:

  Existence of more than one means for performing a required function.
- Remote control:

  Control from a distance of apparatus by means of an electrical or other link.
- Quality plan for software:

  A plan for software lifecycle activities is to be produced which defines relevant procedures, responsibilities and system documentation, including configuration management.
- Inspection of components (only hardware) from sub-suppliers:

  Proof that components and/or sub-assemblies conform to specification.
- Quality control in production:

  Evidence of quality assurance measures on production.
- Final test reports:

  Reports from testing of the finished product and documentation of the test results.
- Traceability of software:

  Modification of program contents and data as well as change of version are to be carried out in accordance with a procedure and are to be documented.
- Software description: Software is to be described, e.g.:
  - description of the basic and communication software installed in each hardware unit
  - description of application software (not program listings)
  - description of functions, performance, constraints and dependencies between modules or other components.
- Hardware description:
  - system block diagram, showing the arrangement, input and output devices and interconnections
  - connection diagrams
  - details of input and output devices
  - details of power supplies.
- Failure analysis for safety related functions only (e.g. FMEA):

  The analysis is to be carried out using appropriate means, e.g.:
  - fault tree analysis
  - risk analysis
  - FMEA or FMECA

  The purpose is to demonstrate that for single failures, systems will fail to safety and that systems in operation will not be lost or degraded beyond acceptable performance criteria when specified by the Society.

1.4 General

1.4.1 The automation systems and components, as indicated in Ch 2, Sec 17, [2], are to be of types approved according to the applicable requirements of these Rules and in particular those stated in this Chapter.

Case-by-case approval may also be granted at the discretion of the Society, based on submission of adequate documentation and subject to the satisfactory outcome of any required tests.

1.4.2 Main and auxiliary machinery essential for the propulsion, control and safety of the unit are to be provided with effective means for its operation and control.

1.4.3 Control, alarm and safety systems are to be based on the fail-to-safety principle.

1.4.4 Failure of automation systems is to generate an alarm.

1.4.5 Detailed indication, alarm and safety requirements regarding automation systems for individual machinery and installations are to be found in Tables located in Part C, Chapter 1 and in Ch 3, Sec 7.

Each row of these tables is to correspond to one independent sensor.

2 Documentation

2.1 General

2.1.1 Before the actual construction is commenced, the Manufacturer, Designer or Shipbuilder is to submit to the Society the documents (plans, diagrams, specifications and calculations) requested in this Section.

2.2 Documents to be submitted

2.2.1 The documents listed in Tab 1 are to be submitted.

2.3 Documents for computer based system

2.3.1 General

For computer based systems, the documents listed in Tab 2 are to be submitted.

2.3.2 System description, computer software

This documentation is to contain:

- a list of all main software modules installed per hardware unit with names and version numbers
- a description of all main software which is to include at least:
  - a description of basic software installed per hardware unit, including communication software, when applicable
  - a description of application software.

Table 1 : Documentation to be submitted

No.	I/A **(1)**	Documentation
1	I	The general specification for the automation of the unit
2	A	The detailed specification of the essential service systems
3	A	The list of components used in the automation circuits, and references (Manufacturer, type, etc.)
4	I	Instruction manuals
5	I	Test procedures for control, alarm and safety systems
6	A	A general diagram showing the monitoring and/or control positions for the various installations, with an indication of the means of access and the means of communication between the positions as well as with the engineers
7	A	The diagrams of the supply circuits of automation systems, identifying the power source
8	A	The list of monitored parameters for alarm/monitoring and safety systems
9	A	Diagram of the engineers' alarm system
(1) A = To be submitted for approval ; I = To be submitted for information.		

Table 2 : Computer based system documentation

No.	I/A **(1)**	Documentation **(2)**
1	I	System description, computer software [2.3.2]
2	A	System description, computer hardware [2.3.3]
3	I	System reliability analysis [2.3.4]
4	I	User interface description [2.3.5]
5	I	Test programs [2.3.6]
6	I	Method of tests and required tests results **(3)**
7	A	For wireless data communication: a) details of manufacturers recommended installation and maintenance practices b) network plan with arrangement and type of antennas and identification of location c) specification of wireless communication system protocols and management functions; see Ch 3, Sec 3, [4.6.3] d) details of radio frequency and power levels e) evidence of type testing in accordance with Ch 3, Sec 6 f) on-board test schedule; see Ch 3, Sec 6, [4].

(1) A = To be submitted for approval ; I = To be submitted for information.
(2) For the evaluation computer based systems of categories II and III.
(3) For systems of category III.

2.3.3 Description of computer hardware

The documentation to be submitted is to include:

- hardware information of importance for the application and a list of documents that apply to the system
- the supply circuit diagram
- a description of hardware and software tools for equipment configuration
- the information to activate the system
- general information for trouble shooting and repair when the system is in operation.

2.3.4 System reliability analysis

The documentation to be submitted is to demonstrate the reliability of the system by means of appropriate analysis such as:

- A failure mode analysis describing the effects due to failures leading to the destruction of the automation system. In addition, this documentation is to show the consequences on other systems, if any. This analysis is appraised in accordance with the IEC Publication 60812, or a recognised standard.
- Test report /life test.
- MTBF calculation.
- Any other documentation demonstrating the reliability of the system.

2.3.5 User interface description

The documentation is to contain:

- a description of the functions allocated to each operator interface (keyboard/screen or equivalent)
- a description of individual screen views (schematics, colour photos, etc.)
- a description of how menus are operated (tree presentation)
- an operator manual providing necessary information for installation and use.

2.3.6 Test programs

The following test programs are to be submitted:

- software module/unit test
- software integration test
- system validation test
- on-board test.

Each test program is to include:

- a description of each test item
- a description of the acceptance criteria for each test.

2.4 Documents for type approval of equipment

2.4.1 Documents to be submitted for type approval of equipment are listed hereafter:

- a request for type approval from the manufacturer or his authorized representative
- the technical specification and drawings depicting the system, its components, characteristics, working principle, installation and conditions of use and, when there is a computer based system, the documents listed in Tab 2
- any test reports previously prepared by specialised laboratories.

2.4.2 Modifications

Modifications are to be documented by the manufacturer. Subsequent significant modifications to the software and hardware for systems of categories II and III are to be submitted for approval.

Note 1: A significant modification is a modification which influences the functionality and/or the safety of the system.

3 Environmental and supply conditions

3.1 General

3.1.1 General

The automation system is to operate correctly when the power supply is within the range specified in Ch 3, Sec 2.

3.1.2 Environmental conditions

The automation system is to be designed to operate satisfactorily in the environment in which it is located. The environmental conditions are described in Ch 2, Sec 2.

3.1.3 Failure behaviour

The automation system is to have non-critical behaviour in the event of power supply failure, faults or restoration of operating condition following a fault. If a redundant power supply is used, it must be taken from an independent source.

3.2 Power supply conditions

3.2.1 Electrical power supply

The conditions of power supply to be considered are defined in Ch 2, Sec 2.

3.2.2 Pneumatic power supply

For pneumatic equipment, the operational characteristics are to be maintained under permanent supply pressure variations of ± 20% of the rated pressure.

Detailed requirements are given in Ch 1, Sec 7.

3.2.3 Hydraulic power supply

For hydraulic equipment, the operational characteristics are to be maintained under permanent supply pressure variations of ± 20% of the rated pressure.

Detailed requirements are given in Ch 1, Sec 7.

4 Materials and construction

4.1 General

4.1.1 The choice of materials and components is to be made according to the environmental and operating conditions in order to maintain the proper function of the equipment.

4.1.2 The design and construction of the automation equipment is to take into account the environmental and operating conditions in order to maintain the proper function of the equipment.

4.2 Type approved components

4.2.1 See Ch 2, Sec 17, [2].

Section 2 Design Requirements

1 General

1.1

1.1.1 All control systems essential for the control and safety of the unit shall be independent or designed such that failure of one system does not degrade the performance of another system.

1.1.2 Controlled systems are to have manual operation.

Failure of any part of such systems shall not prevent the use of the manual override.

1.1.3 Automation systems are to have constant performance.

1.1.4 Safety functions are to be independent of control and monitoring functions.

1.1.5 Control, monitoring and safety systems are to have self-check facilities. In the event of failure, an alarm is to be activated.

In particular, failure of the power supply of the automation system is to generate an alarm.

1.1.6 When a computer based system is used for control, alarm or safety systems, it is to comply with the requirements of Ch 3, Sec 3.

1.1.7 The automatic change-over switch is to operate independently of both systems. When change-over occurs, no stop of the installation is necessary and the latter is not to enter undefined or critical states.

1.1.8 Emergency stops are to be hardwired and independent of any computer based system.

Note 1: Computerized systems may be admitted if evidence is given demonstrating they provide a safety level equivalent to a hardwired system (see Ch 3, Sec 3, [1.7.3]).

2 Power supply of automation systems

2.1 General

2.1.1 Automation systems are to be arranged with an automatic change-over to a continuously available stand-by power supply in case of loss of normal power source.

2.1.2 During changeover from the main source of electrical power to the stand-by source of electrical power, an uninterruptible power supply (UPS) system is to ensure uninterrupted duty for consumers which require continuous power supply, and for consumers which may malfunction upon voltage transients.

2.1.3 The capacity of the stand-by power supply is to be sufficient to allow the normal operation of the automation systems for at least half an hour.

2.1.4 Failure of any power supply to an automation system is to generate an audible and visual alarm.

2.1.5 Power supplies are to be protected against short circuit and overload for each independent automation system.

Power supplies are to be isolated.

3 Control systems

3.1 General

3.1.1 In the case of failure, the control systems used for essential services are to remain in their last position they had before the failure.

3.2 Local control

3.2.1 Each system is to be able to be operated manually from a position located so as to enable visual control of operation. For detailed instrumentation for each system, refer to Part C, Chapter 1 and Part C, Chapter 2.

It shall also be possible to control the auxiliary machinery, essential for the safety of the unit, at or near the machinery concerned.

3.3 Remote control systems

3.3.1 When several control stations are provided, control of machinery is to be possible at one station at a time.

3.3.2 Remote control is to be provided with the necessary instrumentation, in each control station, to allow effective control (correct function of the system, indication of control station in operation, alarm display).

3.3.3 When transferring the control location, no significant alteration of the controlled equipment is to occur. Transfer of control is to be protected by an audible warning and acknowledged by the receiving control location. The main control location is to be able to take control without acknowledgement.

3.4 Automatic control systems

3.4.1 *Automatic starting, operational and control systems shall include provisions for manually overriding the automatic controls.*

3.4.2 Automatic control is to be stable in the range of the controller in normal working conditions.

3.4.3 Automatic control is to have instrumentation to verify the correct function of the system.

4 Remote control of valves

4.1

4.1.1 The following requirements are applicable to valves whose failure could impair essential services.

4.1.2 Failure of the power supply is not to permit a valve to move to an unsafe condition.

4.1.3 An indication is to be provided at the remote control station showing the actual position of the valve or whether the valve is fully open or fully closed.

4.1.4 When valves are remote controlled, a secondary means of operating them is to be provided which may be manual control.

5 Alarm system

5.1 General requirements

5.1.1 Alarms are to be visual and audible and are to be clearly distinguishable, in the ambient noise and lighting in the normal position of the personnel, from any other signals.

5.1.2 Sufficient information is to be provided for proper handling of alarms.

5.1.3 The alarm system is to be of the self-check type; failure within the alarm system, including the outside connection, is to activate an alarm. The alarm circuits are to be independent from each other. All alarm circuits are to be protected so as not to endanger each other.

5.2 Alarm functions

5.2.1 Alarm activation

Alarms are to be activated when abnormal conditions appear in the machinery, which need the intervention of personnel on duty, and on the automatic change-over, when standby machines are installed.

An existing alarm is not to prevent the indication of any further fault.

5.2.2 Acknowledgement of alarm

The acknowledgment of an alarm consists in manually silencing the audible signal and additional visual signals (e.g. rotating light signals) while leaving the visual signal on the active control station. Acknowledged alarms are to be clearly distinguishable from unacknowledged alarms. Acknowledgement should not prevent the audible signal to operate for new alarm.

Alarms shall be maintained until they are accepted and visual indications of individual alarms shall remain until the fault has been corrected, when the alarm system shall automatically reset to the normal operating condition.

Acknowledgement of alarms is only to be possible at the active control station.

Alarms, including the detection of transient faults, are to be maintained until acknowledgement of the visual indication.

Acknowledgement of visual signals is to be separate for each signal or common to a limited group of signals. Acknowledgement is only to be possible when the user has visual information on the alarm condition for the signal or all signals in a group.

5.2.3 Inhibition of alarms

Manual inhibition of separate alarms may be accepted when this is clearly indicated.

Inhibition of alarm and safety functions in certain operating modes (e.g. during start-up or trimming) is to be automatically disabled in other modes.

5.2.4 Time delay of alarms

It is to be possible to delay alarm activation in order to avoid false alarms due to normal transient conditions (e.g. during start-up or trimming).

5.2.5 Transfer of responsibility

Where several alarm control stations located in different spaces are provided, responsibility for alarms is not to be transferred before being acknowledged by the receiving location. Transfer of responsibility is to give an audible warning. At each control station it is to be indicated which location is in charge.

6 Safety system

6.1 Design

6.1.1 System failures

A safety system is to be designed so as to limit the consequence of failures. It is to be constructed on the fail-to-safety principle.

The safety system is to be of the self-check type; as a rule, failure within the safety system, including the outside connection, is to activate an alarm.

6.2 Function

6.2.1 Safety activation

The safety system is to be activated automatically in the event of identified conditions which could lead to damage of associated machinery or systems, such that:

- normal operating conditions are restored (e.g. by the starting of the standby unit), or
- the operation of the machinery is temporarily adjusted to the prevailing abnormal conditions (e.g. by reducing the output of the associated machinery), or
- the machinery is protected, as far as possible, from critical conditions by shutting off the fuel or power supply, thereby stopping the machinery (shutdown), or appropriate shutdown.

6.2.2 Safety indication

When the safety system has been activated, it is to be possible to trace the cause of the safety action. This is to be accomplished by means of a central or local indication.

When a safety system is made inoperative by a manual override, this is to be clearly indicated at corresponding control stations.

Override of safety functions in certain operating modes (e.g. during start-up or trimming) is to be automatically disabled in the other modes.

Automatic safety actions are to activate an alarm at predefined control stations.

6.3 Shutdown

6.3.1 For shutdown systems of machinery, when the system has stopped a machine, the latter is not to be restarted automatically before a manual reset of the safety system has been carried out.

6.4 Standby systems

6.4.1 For the automatic starting system of the standby units, the following requirements are to be applied:

- faults in the electrical or mechanical system of the running machinery are not to prevent the standby machinery from being automatically started
- when a machine is on standby, ready to be automatically started, this is to be clearly indicated at its control position
- the change-over to the standby unit is to be indicated by a visual and audible alarm
- means are to be provided close to the machine, to prevent undesired automatic or remote starting (e.g. when the machine is being repaired)
- automatic starting is to be prevented when conditions are present which could endanger the standby machine.

6.5 Testing

6.5.1 The safety systems are to be tested in accordance with the requirements in Ch 3, Sec 6.

Section 3 Computer Based Systems

1 General requirements

1.1 General

1.1.1 The characteristics of the system are to be compatible with the intended applications, under normal and abnormal process conditions. The response time for alarm function is to be less than 2 seconds.

1.1.2 When systems under control are required to be duplicated and in separate compartments, this is also to apply to control elements within computer based systems.

1.1.3 As a rule, computer based systems intended for essential services are to be type approved.

1.1.4 Programmable electronic systems are to fulfil the requirements of the system under control for all normally anticipated operating conditions, taking into account danger to persons, environmental impact, damage to unit as well as equipment, usability of programmable electronic systems and operability of non-computer-based devices and systems, etc.

1.1.5 When an alternative design or arrangement deviating from these requirements is proposed, an engineering analysis is required to be carried out in accordance with a relevant International or National Standard acceptable to the Society. See also SOLAS Ch II-1/F, Reg. 55.

Note 1: As a failure of a category III system may lead to an accident with catastrophic severity, the use of unconventional technology for such applications is only to be permitted exceptionally in cases where evidence is presented that demonstrates acceptable and reliable system performance to the satisfaction of the Society.

1.2 System type approval

1.2.1 The type approval is to cover the hardware and basic software of the system. The type approval requirements are detailed in Ch 3, Sec 6. A list of the documents to be submitted is provided in Ch 3, Sec 1.

1.3 System operation

1.3.1 The system is to be protected so that authorised personnel only can modify any setting which could alter the system.

1.3.2 Modification of the configuration, set points or parameters is to be possible without complex operations such as compilation or coded data insertion.

1.3.3 Program and data storage of the system is to be designed so as not to be altered by environmental conditions, as defined in Ch 2, Sec 2, [1], or loss of the power supply.

1.4 System reliability

1.4.1 System reliability is to be documented as required in Ch 3, Sec 1, [2.3.4].

1.4.2 When used for alarm, safety or control functions, the hardware system design is to be on the fail safe principle.

1.5 System failure

1.5.1 In the event of failure of part of the system, the remaining system is to be brought to a downgraded operable condition.

1.5.2 A self-monitoring device is to be implemented so as to check the proper function of hardware and software in the system. This is to include a self-check facility of input /output cards, as far as possible.

1.5.3 The failure and restarting of computer based systems should not cause processes to enter undefined or critical states.

1.6 System redundancy

1.6.1 If it is demonstrated that the failure of the system, which includes the computer based system, leads to a disruption of the essential services, a secondary independent means, of appropriate diversity, is to be available to restore the adequate functionality of the service.

1.7 System categories

1.7.1 Programmable electronic systems are to be assigned into three system categories as shown in Tab 1 according to the possible extent of the damage caused by a single failure within the programmable electronic systems.

Consideration is to be given to the extent of the damage directly caused by a failure, but not to any consequential damage.

Identical redundancy is not to be taken into account for the assignment of a system category.

1.7.2 The assignment of a programmable electronic system to the appropriate system category is to be made according to the greatest likely extent of direct damage. For examples, see Tab 2.

Note 1: Where independent effective backup or other means of averting danger is provided, the system category III may be decreased by one category.

1.7.3 For computer-based systems ensuring safety function and which are not backed-up by non-computer-based devices, a risk analysis which demonstrates the appropriate availability and reliability of the system, is to be carried out at the satisfaction of the Society.

Note 1: Guidance for highly reliable hardware and software can be found in IEC 61508 series and IEC 61511.

Table 1 : System categories

Category	Effect	System functionality
I	Those systems, failure of which will not lead to dangerous situations for human safety, safety of the unit and/or threat to the environment	• Monitoring function for informational/administrative tasks
II	Those systems, failure of which could eventually lead to dangerous situations for human safety, safety of the unit and/or threat to the environment	• Alarm and monitoring functions • Control functions which are necessary to maintain the unit in its normal operational and habitable conditions
III	Those systems, failure of which could immediately lead to dangerous situations for human safety, safety of the unit and/or threat to the environment	• Functions for maintaining the safety systems of the unit in normal and emergency conditions

Table 2 : Examples of assignment to system categories

Category	Effect
I	Maintenance support systems Information and diagnostic systems
II	Alarm and monitoring equipment Tank capacity measuring equipment Control systems for auxiliary machinery Fire detection systems Fire extinguishing systems Bilge systems Governors
III	Machinery protection systems / equipment Burner control systems Electronic fuel injection for diesel engines Control systems for essential services Synchronising units for switchboards
Note 1: The examples listed are not exhaustive.	

2 Hardware

2.1 General

2.1.1 The construction of systems is to comply with the requirements of Ch 3, Sec 4.

2.2 Housing

2.2.1 The housing of the system is to be designed to face the environmental conditions, as defined in Ch 2, Sec 2, [1], in which it will be installed. The design will be such as to protect the printed circuit board and associated components from external aggression. When required, the cooling system is to be monitored, and an alarm activated when the normal temperature is exceeded.

2.2.2 The mechanical construction is to be designed to withstand the vibration levels defined in Ch 2, Sec 2, depending on the applicable environmental condition.

3 Software

3.1 General

3.1.1 The basic software is to be developed in consistent and independent modules.

A self-checking function is to be provided to identify failure of software module.

When hardware (e.g. input /output devices, communication links, memory, etc.) is arranged to limit the consequences of failures, the corresponding software is also to be separated in different software modules ensuring the same degree of independence.

3.1.2 Basic software is to be type approved according to Ch 3, Sec 6, [2.3.1].

3.1.3 Application software is to be tested in accordance with Ch 3, Sec 6, [3.4].

3.1.4 Loading of software, when necessary, is to be performed in the aided conversational mode.

3.1.5 Software versions are to be solely identified by number, date or other appropriate means. Modifications are not to be made without also changing the version identifier. A record of changes is to be maintained and made available upon request of the Society.

3.2 Software development quality

3.2.1 Software development is to be carried out according to a quality plan defined by the builder and records are to be kept. The standard ISO 9000-1, or equivalent international standard, is to be taken as guidance for the quality procedure. The quality plan is to include the test procedure for software and the results of tests are to be documented.

4 Data transmission link

4.1 General

4.1.1 These requirements apply to system categories II and III using shared data communication links to transfer data between distributed programmable electronic equipment or systems.

4.1.2 The performance of the network transmission medium (transfer rate and time delay) is to be compatible with the intended application.

4.1.3 When the master /slave configuration is installed, the master terminal is to be indicated on the other terminals.

4.1.4 System self-checking capabilities are to be arranged to initiate transition to the least hazardous state for the complete installation in the event of data communication failure.

4.1.5 The characteristics of the data communication link are to be such as to transmit that all necessary information in adequate time and overloading is prevented.

4.2 Hardware support

4.2.1 Loss of a data communication link is not to affect the ability to operate essential services by alternative means.

4.2.2 The data communication link is to be self-checking, detecting failures on the link itself and data communication failures on nodes connected to the link. Detected failures are to initiate an alarm.

The data communication link is to be automatically started when power is turned on, or restarted after loss of power.

4.2.3 Where a single component failure results in loss of data communication, means are to be provided to automatically restore data communication.

4.2.4 The choice of transmission cable is to be made according to the environmental conditions. Particular attention is to be given to the level characteristics required for electromagnetic interferences.

4.2.5 The installation of transmission cables is to comply with the requirements stated in Ch 2, Sec 11. In addition, the routing of transmission cables is to be chosen so as to be in less exposed zones regarding mechanical, chemical or EMI damage. As far as possible, the routing of each cable is to be independent of any other cable. These cables are not normally allowed to be routed in bunches with other cables on the cable tray.

4.2.6 The coupling devices are to be designed, as far as practicable, so that in the event of a single fault, they do not alter the network function. When a failure occurs, an alarm is to be activated.

Addition of coupling devices is not to alter the network function.

Hardware connecting devices are to be chosen, when possible, in accordance with international standards.

When a computer based system is used with a non-essential system and connected to a network used for essential systems, the coupling device is to be of an approved type.

4.3 Transmission software

4.3.1 The transmission software is to be so designed that alarm or control data have priority over any other data, and overloading is prevented. For control data, the transmission time is not to jeopardise efficiency of the functions.

4.3.2 The transmission protocol is preferably to be chosen among international standards.

4.3.3 A means of transmission control is to be provided and designed so as to verify the completion of the data transmitted (CRC or equivalent acceptable method). When corrupted data is detected, the number of retries is to be limited so as to keep an acceptable global response time. The duration of the message is to be such that it does not block the transmission of other stations.

4.4 Transmission operation

4.4.1 When a hardware or software transmission failure occurs, an alarm is to be activated. A means is to be provided to verify the activity of transmission and its proper function (positive information).

4.5 Redundant network

4.5.1 Where two or more essential functions are using the same network, redundant networks are required according to the conditions mentioned in [1.6.1].

4.5.2 Switching of redundant networks from one to the other is to be achieved without alteration of the performance.

4.5.3 When not in operation, the redundant network is to be permanently monitored, so that any failure of either network may be readily detected. When a failure occurs in one network, an alarm is to be activated.

4.5.4 In redundant networks, the two networks are to be mutually independent. Failure of any common components is not to result in any degradation in performance.

4.5.5 When redundant data communication links are required, they are to be routed separately, as far as practicable.

4.6 Additional requirements for wireless data links

4.6.1 These requirements are in addition to the requirements of [4.1] to [4.4] and apply to system category II using wireless data communication links to transfer data between distributed programmable electronic equipment or systems.

Wireless data communication links are not allowed for systems category III.

4.6.2 Functions that are required to operate continuously to provide essential services dependant on wireless data communication links are to have an alternative means of control that can be brought in action within an acceptable period of time.

4.6.3 Wireless data communication is to employ recognised international wireless communication system protocols that incorporate the following:

a) Message integrity: fault prevention, detection, diagnosis, and correction so that the received message is not corrupted or altered when compared to the transmitted message.

b) Configuration and device authentication: shall only permit connection of devices that are included in the system design.

c) Message encryption: protection of the confidentiality and or criticality the data content.

d) Security management: protection of network assets, prevention of unauthorised access to network assets.

4.6.4 The wireless system is to comply with the radio frequency and power level requirements of International Telecommunications Union and flag state requirements.

Note 1: Consideration should be given to system operation in the event of port state and local regulations that pertain to the use of radio-frequency transmission prohibiting the operation of a wireless data communication link due to frequency and power level restrictions.

4.7 Protection against modifications

4.7.1 Programmable electronic systems of categories II and III are to be protected against program modification by the user.

4.7.2 For systems of category III, modifications of parameters by the manufacturer are to be approved by the Society.

4.7.3 Any modifications made after performance of the tests witnessed by the Society as per item No. 6. of Ch 3, Sec 6, Tab 2 are to be documented and traceable.

5 Man-machine interface

5.1 General

5.1.1 The design of the operator interface is to follow ergonomic principles. The standard IEC 60447 Man-machine interface or equivalent recognised standard may be used.

5.2 System functional indication

5.2.1 A means is to be provided to verify the activity of the system, or subsystem, and its proper function.

5.2.2 A visual and audible alarm is to be activated in the event of malfunction of the system, or subsystem. This alarm is to be such that identification of the failure is simplified.

5.3 Input devices

5.3.1 Input devices are to be positioned such that the operator has a clear view of the related display.

The operation of input devices, when installed, is to be logical and correspond to the direction of action of the controlled equipment.

The user is to be provided with positive confirmation of action.

Control of essential functions is only to be available at one control station at any time. Failing this, conflicting control commands are to be prevented by means of interlocks and /or warnings.

5.3.2 When keys are used for common/important controls, and several functions are assigned to such keys, the active function is to be recognisable.

If use of a key may have unwanted consequences, provision is to be made to prevent an instruction from being executed by a single action (e.g. simultaneous use of two keys, repeated use of a key, etc.).

Means are to be provided to check validity of the manual input data into the system (e.g. checking the number of characters, range value, etc.).

5.3.3 If use of a push button may have unwanted consequences, provision is to be made to prevent an instruction from being executed by a single action (e.g. simultaneous use of two push buttons, repeated use of push buttons, etc.). Alternatively, this push button is to be protected against accidental activation by a suitable cover, or use of a pull button, if applicable.

5.4 Output devices

5.4.1 VDU's (video display units) and other output devices are to be suitably lighted and dimmable when installed in the wheelhouse. The adjustment of brightness and colour of VDU's is to be limited to a minimum discernable level.

When VDU's are used for alarm purposes, the alarm signal, required by the Rules, is to be displayed whatever the other information on the screen. The alarms are to be displayed according to the sequence of occurrence.

When alarms are displayed on a colour VDU, it is to be possible to distinguish alarm in the event of failure of a primary colour.

The position of the VDU is to be such as to be easily readable from the normal position of the personnel on watch. The size of the screen and characters is to be chosen accordingly.

When several control stations are provided in different spaces, an indication of the station in control is to be displayed at each control station. Transfer of control is to be effected smoothly and without interruption to the service.

5.5 Workstations

5.5.1 The number of workstations at control stations is to be sufficient to ensure that all functions may be provided with any one unit out of operation, taking into account any functions which are required to be continuously available.

5.5.2 Multifunction workstations for control and display are to be redundant and interchangeable.

5.5.3 The choice of colour, graphic symbols, etc. is to be consistent in all systems on board.

5.6 Computer dialogue

5.6.1 The computer dialogue is to be as simple and self-explanatory as possible.

The screen content is to be logically structured and show only what is relevant to the user.

Menus are to be organised so as to have rapid access to the most frequently used functions.

5.6.2 A means to go back to a safe state is always to be accessible.

5.6.3 A clear warning is to be displayed when using functions such as alteration of control condition, or change of data or programs in the memory of the system.

5.6.4 A 'wait' indication is to warn the operator when the system is executing an operation.

6 Integrated systems

6.1 General

6.1.1 Operation with an integrated system is to be at least as effective as it would be with individual, stand alone equipment.

6.1.2 Failure of one part (individual module, equipment or subsystem) of the integrated system is not to affect the functionality of other parts, except for those functions directly dependant on information from the defective part.

6.1.3 A failure in connection between parts, cards connections or cable connections is not to affect the independent functionality of each connected part.

6.1.4 Alarm messages for essential functions are to have priority over any other information presented on the display.

7 Expert system

7.1

7.1.1 The expert system software is not to be implemented on a computer linked with essential functions.

7.1.2 Expert system software is not to be used for direct control or operation, and needs human validation by personnel on watch.

8 System testing

8.1

8.1.1 The system tests are to be carried out according to Ch 3, Sec 6.

8.1.2 All alterations of a system (hardware and software) are to be tested and the results of tests documented.

9 System maintenance

9.1

9.1.1 System maintenance is to be planned and documented. Changes in configuration, hardware and software are to be documented. The relevant documents and back-ups are to be prepared when the system is delivered.

Section 4 Constructional Requirements

1 General

1.1 General

1.1.1 Automation systems are to be so constructed as:

- to withstand the environmental conditions, as defined in Ch 2, Sec 2, [1], in which they operate
- to have necessary facilities for maintenance work.

1.2 Materials

1.2.1 Materials are generally to be of the flame-retardant type.

1.2.2 Connectors are to be able to withstand standard vibrations, mechanical constraints and corrosion conditions as given in Ch 3, Sec 6.

1.3 Component design

1.3.1 Automation components are to be designed to simplify maintenance operations. They are to be so constructed as to have:

- easy identification of failures
- easy access to replaceable parts
- easy installation and safe handling in the event of replacement of parts (plug and play principle) without impairing the operational capability of the system, as far as practicable
- facility for adjustment of set points or calibration
- test point facilities, to verify the proper operation of components.

1.4 Environmental and supply conditions

1.4.1 The environmental and supply conditions are specified in Ch 3, Sec 1. Specific environmental conditions are to be considered for air temperature and humidity, vibrations, corrosion from chemicals and mechanical or biological attacks.

2 Electrical and/or electronic systems

2.1 General

2.1.1 Electrical and electronic equipment is to comply with the requirements of Part C, Chapter 2 and Part C, Chapter 3.

2.1.2 A separation is to be done between any electrical components and liquids, if they are in a same enclosure. Necessary drainage will be provided where liquids are likely to leak.

2.1.3 When plug-in connectors or plug-in elements are used, their contacts are not to be exposed to excessive mechanical loads. They are to be provided with a locking device.

2.1.4 All replaceable parts are to be so arranged that it is not possible to connect them incorrectly or to use incorrect replacements. Where this not practicable, the replacement parts as well as the associated connecting devices are to be clearly identified. In particular, all connection terminals are to be properly tagged. When replacement cannot be carried out with the system on, a warning sign is to be provided.

2.1.5 Forced cooling systems are to be avoided. Where forced cooling is installed, an alarm is to be provided in the event of failure of the cooling system.

2.1.6 The interface connection is to be so designed to receive the cables required. The cables are to be chosen according to Ch 2, Sec 3.

2.2 Electronic system

2.2.1 Printed circuit boards are to be so designed that they are properly protected against the normal aggression expected in their environment.

2.2.2 Electronic systems are to be constructed taking account of electromagnetic interferences.

Special precautions are to be taken for:

- measuring elements such as the analogue amplifier or analog/digital converter; and
- connecting different systems having different ground references.

2.2.3 The components of electronic systems (printed circuit board, electronic components) are to be clearly identifiable with reference to the relevant documentation.

2.2.4 Where adjustable set points are available, they are to be readily identifiable and suitable means are to be provided to protect them against changes due to vibrations and uncontrolled access.

2.2.5 The choice of electronic components is to be made according to the normal environmental conditions, in particular the temperature rating.

2.2.6 All stages of fabrication of printed circuit boards are to be subjected to quality control. Evidence of this control is to be documented.

2.2.7 Burn-in tests or equivalent tests are to be performed.

2.2.8 The programmable components are to be clearly tagged with the program date and reference.

Components are to be protected against outside alteration when loaded.

2.3 Electrical system

2.3.1 Cables and insulated conductors used for internal wiring are to be at least of the flame-retardant type, and are to comply with the requirements in Part C, Chapter 2.

2.3.2 If specific products (e.g. oil) are likely to come into contact with wire insulation, the latter is to be resistant to such products or properly shielded from them, and to comply with the requirements in Part C, Chapter 2.

3 Pneumatic systems

3.1

3.1.1 Pneumatic automation systems are to comply with Ch 1, Sec 7, [17].

3.1.2 Pneumatic circuits of automation systems are to be independent of any other pneumatic circuit on board.

4 Hydraulic systems

4.1

4.1.1 Hydraulic automation systems are to comply with Ch 1, Sec 7, [14].

4.1.2 Suitable filtering devices are to be incorporated into the hydraulic circuits.

4.1.3 Hydraulic circuits of automation systems are to be independent of any other hydraulic circuit on board.

5 Automation consoles

5.1 General

5.1.1 Automation consoles are to be designed on ergonomic principles. Handrails are to be fitted for safe operation of the console.

5.2 Indicating instruments

5.2.1 The operator is to receive feed back information on the effects of his orders.

5.2.2 Indicating instruments and controls are to be arranged according to the logic of the system in control. In addition, the operating movement and the resulting movement of the indicating instrument are to be consistent with each other.

5.2.3 The instruments are to be clearly labelled. When installed in the wheelhouse, all lighted instruments of consoles are to be dimmable, where necessary.

5.3 VDU's and keyboards

5.3.1 VDU's in consoles are to be located so as to be easily readable from the normal position of the operator. The environmental lighting is not to create any reflection which makes reading difficult.

5.3.2 The keyboard is to be located to give easy access from the normal position of the operator. Special precautions are to be taken to avoid inadvertent operation of the keyboard.

Section 5 Installation Requirements

1 General

1.1

1.1.1 Automation systems are to be installed taking into account:

- the maintenance requirements (test and replacement of systems or components)
- the influence of EMI. The IEC 60533 standard is to be taken as guidance
- the environmental conditions corresponding to the location in accordance with Ch 2, Sec 1 and Ch 2, Sec 3, [8].

1.1.2 Control stations are to be arranged for the convenience of the operator.

1.1.3 Automation components are to be properly fitted. Screws and nuts are to be locked, where necessary.

2 Sensors and components

2.1 General

2.1.1 The location and selection of the sensor is to be done so as to measure the actual value of the parameter. Temperature, vibration and EMI levels are to be taken into account. When this is not possible, the sensor is to be designed to withstand the local environment.

2.1.2 The enclosure of the sensor and the cable entry are to be appropriate to the space in which they are located.

2.1.3 Means are to be provided for testing, calibration and replacement of automation components. Such means are to be designed, as far as practicable, so as to avoid perturbation of the normal operation of the system.

2.1.4 A tag number is to identify automation components and is to be clearly marked and attached to the component. These tag numbers are to be collected on the instrument list mentioned in Ch 3, Sec 1, Tab 1.

2.1.5 Electrical connections are to be arranged for easy replacement and testing of sensors and components. They are to be clearly marked.

2.1.6 Low level signal sensors are to be avoided. When installed they are to be located as close as possible to amplifiers, so as to avoid external influences. Failing this, the wiring is to be provided with suitable EMI protection and temperature correction.

2.2 Temperature elements

2.2.1 Temperature sensors, thermostats or thermometers are to be installed in a thermowell of suitable material, to permit easy replacement and functional testing. The thermowell is not to significantly modify the response time of the whole element.

2.3 Pressure elements

2.3.1 Three-way valves or other suitable arrangements are to be installed to permit functional testing of pressure elements, such as pressure sensors, pressure switches, without stopping the installation.

2.3.2 In specific applications, where high pulsations of pressure are likely to occur, a damping element, such as a capillary tube or equivalent, is to be installed.

2.4 Level switches

2.4.1 Level switches fitted to flammable oil tanks, or similar installations, are to be installed so as to reduce the risk of fire.

3 Cables

3.1 Installation

3.1.1 Cables are to be installed according to the requirements in Ch 2, Sec 12, [7].

3.1.2 Suitable installation features such as screening and/or twisted pairs and/or separation between signal and other cables are to be provided in order to avoid possible interference on control and instrumentation cables.

3.1.3 Specific transmission cables (coaxial cables, twisted pairs, etc.) are to be routed in specific cable-ways and mechanically protected to avoid loss of any important transmitted data. Where there is a high risk of mechanical damage, the cables are to be protected with pipes or equivalent.

3.1.4 The cable bend radius is to be in accordance with the requirements of Ch 2, Sec 12, [7.2].

For mineral insulated cables, coaxial cables or fibre optic cables, whose characteristics may be modified, special precautions are to be taken according to the manufacturer's instructions.

3.2 Cable terminations

3.2.1 Cable terminations are to be arranged according to the requirements in Part C, Chapter 2. Particular attention is to be paid to the connections of cable shields. Shields are to be connected only at the sensor end when the sensor is earthed, and only at the processor end when the sensor is floating.

3.2.2 Cable terminations are to be able to withstand the identified environmental conditions (shocks, vibrations, salt mist, humidity, etc.).

3.2.3 Terminations of all special cables such as mineral insulated cables, coaxial cables or fibre optic cables are to be arranged according to the manufacturer's instructions.

4 Pipes

4.1

4.1.1 For installation of piping circuits used for automation purposes, see the requirements in Ch 1, Sec 7.

4.1.2 As far as practicable, piping containing liquids is not to be installed in or adjacent to electrical enclosures (see Ch 3, Sec 4, [2.1.2]).

4.1.3 Hydraulic and pneumatic piping for automation systems is to be marked to indicate its function.

5 Automation consoles

5.1 General

5.1.1 Consoles or control panels are to be located so as to enable a good view of the process under control, as far as practicable. Instruments are to be clearly readable in the ambient lighting.

5.1.2 The location is to be such as to allow easy access for maintenance operations.

Section 6 Testing

1 General

1.1 General

1.1.1 Automation systems are to be tested for type approval, at works and on board, when required. Tests are to be carried out under the supervision of a Surveyor of the Society.

1.1.2 The type testing conditions for electrical, control and instrumentation equipment, computers and peripherals are described in Article [2].

1.1.3 Automation systems are to be inspected at works, according to the requirements of [3], in order to check that the construction complies with the Rules.

1.1.4 Automation systems are to be tested when installed on board and prior to sea trials, to verify their performance and adaptation on site, according to Article [4].

2 Type approval

2.1 General

2.1.1 The following requirements are applicable, but not confined, to all electrical, electronic and programmable equipment which are intended to be type approved for control, monitoring, alarm and protection systems for use in offshore units.

2.1.2 The necessary documents to be submitted, prior to type testing, are listed in Ch 3, Sec 1, [2.4.1]. The type approval of automation systems refers to hardware type approval or software type approval, as applicable.

2.2 Hardware type approval

2.2.1 Hardware type approval of automation systems is obtained subject to the successful outcome of the tests described in Tab 1. These tests are to demonstrate the ability of the equipment to function as intended under the specified test conditions.

2.2.2 The extent of testing (i.e. selection and sequence of carrying out tests and number of pieces to be tested) is to be determined upon examination and evaluation of the equipment or component subject to testing, giving due regards to its intended usage.

Equipment is to be tested in its normal position if otherwise not specified in the test specification.

Vibration and salt mist testing may be performed on different specimens, where applicable.

Reset of the automation system is accepted between each test, where necessary.

Note 1: As used in this Section, and in contrast to a complete performance test, a functional test is a simplified test sufficient to verify that the equipment under test (EUT) has not suffered any deterioration caused by the individual environmental tests.

2.2.3 The following additional tests may be required, depending on particular manufacturing or operational conditions:

- mechanical endurance test
- temperature shock test (e.g. 12 shocks on exhaust gas temperature sensors from 20°C ± 5°C to maximum temperature of the range)
- immersion test
- oil resistance test
- shock test.

The test procedure is to be defined with the Society in each case.

2.3 Software type approval

2.3.1 Software of computer based systems are to be approved in accordance with the related system category, as defined in Ch 3, Sec 3, [1.7].

Type approval consists of an assessment of the development quality and verification of tests and evidence, according to Tab 2.

2.3.2 Software is to be approved in association with hardware. References of software and hardware are to be specified in the type approval certificate.

2.3.3 Basic software of standard type used as tools for operation of a computer based system may be accepted without type approval at the discretion of the Society.

Table 1 : Type tests

No.	Test	Procedure **(6)**	Test parameters	Other information
1	Visual inspection	–	–	• drawings, design data
2	Performance test	Manufacturer performance test programme based upon specification and relevant rule requirements When the EUT is required to comply with an international performance standard, e.g. protection relays, verification of requirements in the standard are to be part of the performance testing required in this initial test and subsequent performance tests after environmental testing where required as per [2.2].	• standard atmosphere conditions • temperature: 25°C ± 10°C • relative humidity: 60% ± 30% • air pressure: 96 KPa ± 10 KPa	• confirmation that operation is in accordance with the requirements specified for particular automatic systems or equipment • checking of self-monitoring features • checking of specified protection against an access to the memory • checking against effect of unerroneous use of control elements in the case of computer systems
3	Power supply failure	–	• 3 interruptions during 5 minutes • switching- off time 30 s each case	• verification of the specified action of the equipment on loss and restoration of supply in accordance with the system design • verification of possible corruption of programme or data held in programmable electronic systems, where applicable • the time of 5 minutes may be exceeded if the equipment under test needs a longer time for start up, e.g. booting sequence • for equipment which requires booting, one additional power supply interruption during booting to be performed
4a	Electric A.C. power supply variations	–	COMBINATION Voltage variation permanent / Frequency variation permanent + 6% / + 5% + 6% / – 5% – 10% / – 5% – 10% / + 5% voltage transient (1,5s) / frequency transient (5s) + 20% / + 10% – 20% / – 10%	
4b	Electric D.C. power supply variations	–	Voltage tolerance continuous: ± 10% Voltage cyclic variation: 5% Voltage ripple: 10% Electric battery supply: • +30% to –25% for equipment connected to charging battery or as determined by the charging/discharging characteristics, including ripple voltage from the charging device • +20% to –25% for equipment not connected to the battery during charging	
4c	Pneumatic and hydraulic power supply variations	–	Pressure: ± 20% Duration: 15 minutes	

No.	Test	Procedure **(6)**	Test parameters	Other information
5a	Dry heat **(1)**	IEC 60068-2-2 Test Bb for non-heat dissipating equipment	• Temperature: 55°C ± 2°C Duration: 16 hours, or • Temperature: 70°C ± 2°C Duration: 16 hours	• equipment operating during conditioning and testing • functional test **(9)** during the last hour at the test temperature • for equipment specified for increased temperature the dry heat test is to be conducted at the agreed test temperature and duration
5b	Dry heat **(1)**	IEC 60068-2-2 Test Be for heat dissipating equipment	• Temperature: 55°C ± 2°C Duration: 16 hours, or • Temperature: 70°C ± 2°C Duration: 16 hours	• equipment operating during conditioning and testing with cooling system on if provided • functional test **(9)** during the last hour at the test temperature • for equipment specified for increased temperature the dry heat test is to be conducted at the agreed test temperature and duration.
6	Damp heat	IEC 60068-2-30 Test Db	Temperature: 55°C Humidity: 95% Duration: 2 cycles (12 + 12 hours)	• measurement of insulation resistance before test • the test shall start with 25°C ± 3°C and at least 95% humidity • equipment operating during the complete first cycle and switched off during second cycle except for functional test • functional test during the first 2 hours of the first cycle at the test temperature and during the last 2 hours of the second cycle at the test temperature; Duration of the second cycle can be extended due to more convenient handling of the functional test • recovery at standard atmosphere conditions • insulation resistance measurements and performance test
7	Vibration	IEC 60068-2-6 Test Fc	• 2 Hz ± 3/0 Hz to 13,2 Hz amplitude: ± 1mm • 13,2 Hz to 100 Hz acceleration: ± 0,7 g For severe vibration conditions such as, e. g., on diesel engines, air compressors, etc.: • 2,0 Hz to 25 Hz amplitude: ± 1,6 mm • 25 Hz to 100 Hz acceleration: ± 4,0 g Note: More severe conditions may exist for example on exhaust manifolds or fuel oil injection systems of diesel engines. For equipment specified for increased vibration levels the vibration test is to be conducted at the agreed vibration level, frequency range and duration. Values may be required to be in these cases: • 40 Hz to 2000 Hz • acceleration: ± 10,0 g at 600°C	• duration 90 minutes at 30 Hz in case of no resonance condition • duration 90 minutes at each resonance frequency at which Q ≥ 2 is recorded • during the vibration test, functional tests are to be carried out • tests to be carried out in three mutually perpendicular planes • it is recommended as a guidance that Q does not exceed 5 • duration 120 minutes where sweep test is to be carried out instead of discrete frequency test and a number of resonant frequencies is detected close to each other. Sweep over a restricted frequency range between 0.8 and 1.2 times the critical frequencies can be used where appropriate. Note: Critical frequency is a frequency at which the equipment being tested may exhibit: • malfunction and/or performance deterioration • mechanical resonances and/or other response effects occur, e.g. chatter

No.	Test	Procedure **(6)**	Test parameters	Other information
8	Inclination	IEC 60092-504	Static 22,5° Dynamic 22,5°	a) inclined to the vertical at an angle of at least 22,5° b) inclined to at least 22,5° on the other side of the vertical and in the same plane as in a) c) inclined to the vertical at an angle of at least 22,5° in plane at right angles to that used in a) d) inclined to at least 22,5° on the other side of the vertical and in the same plane as in c) Note: The period of testing in each position should be sufficient to fully evaluate the behaviour of the equipment Using the directions defined in a) to d) above, the equipment is to be rolled to an angle of 22,5° each side of the vertical with a period of 10 seconds The test in each direction is to be carried out for not less than 15 minutes Note: These inclination tests are normally not required for equipment with no moving parts.
9	Insulation resistance	Rated supply voltage / Test voltage (D.C. voltage) (V) Un ≤ 65 V / 2 x Un min. 24 V Un > 65V / 500 V	Minimum insulation resistance before / after 10 Mohms / 1,0 Mohms 100 Mohms / 10 Mohms	• insulation resistance test is to be carried out before and after: damp heat test, cold test, salt mist test and high voltage test • between all phases and earth, and where appropriate between the phases Note: Certain components, e. g. for EMC protection, may be required to be disconnected for this test
10	High voltage	Rated voltage Un / Test voltage (A.C. voltage 50 or 60 Hz) Up to 65 V / 2 x Un + 500 V 66 V to 250 V / 1500 V 251 V to 500 V / 2000 V 501 V to 690 V / 2500 V		• separate circuits are to be tested against each other and all circuits connected with each other tested against earth • printed circuits with electronic components may be removed during the test • period of application of the test voltage: 1 minute Note: Certain components, e. g. printed circuits with electronic components, may be required to be disconnected for this test
11	Cold	IEC 60068-2-1	• Temperature: +5°C ± 3°C Duration: 2 hours, or • Temperature: –25°C ± 3°C Duration: 2 hours (see **(2)**)	• initial measurement of insulation resistance • equipment not operating during conditioning and testing except for functional test • functional test during the last hour at the test temperature • insulation resistance measurement and the functional test after recovery
12	Salt mist	IEC 60068-2-52 Test Kb	Four spraying periods with a storage of seven days after each	• initial measurement of insulation resistance and initial functional test • equipment not operating during conditioning • functional test on the 7th day of each storage period • insulation resistance measurement and performance test 4 to 6h after recovery (see **(3)**) • on completion of exposure, the equipment shall be examined to verify that deterioration or corrosion (if any) is superficial in nature

No.	Test	Procedure **(6)**	Test parameters	Other information
13	Electrostatic discharge	IEC 61000-4-2	Contact discharge: 6 kV Air discharge: 2 kV, 4 kV, 8 kV Interval between single discharges: 1 sec. No. of pulses: 10 per polarity According to test level 3	• to simulate electrostatic discharge as may occur when persons touch the appliance • the test is to be confined to the points and surfaces that can normally be reached by the operator • performance criterion B (see **(4)**)
14	Electromagnetic field	IEC 61000-4-3	Frequency range: 80 MHz to 2 GHz Modulation**: 80% AM at 1000Hz Field strength: 10V/m Frequency sweep rate: ≤ $1,5.10^{-3}$ decades/s (or 1% / 3 sec) According to test level 3	• to simulate electromagnetic fields radiated by different transmitters • the test is to be confined to the appliances exposed to direct radiation by transmitters at their place of installation • performance criterion A (see **(5)**) • if an equipment is intended to receive radio signals for the purpose of radio communication (e.g. wifi router, remote radio controller), then the immunity limits at its communication frequency do not apply, subject to the provisions in Ch 3, Sec 3, [4.6] ** If, for tests of equipment, an input signal with a modulation frequency of 1000 Hz is necessary, a modulation frequency of 400 Hz should be chosen
15	Conducted low Frequency		A.C.: • Frequency range: rated frequency to 200th harmonic • Test voltage (rms): 10% of supply to 15th harmonic reducing to 1% at 100th harmonic and maintain this level to the 200th harmonic, min 3 V r.m.s, max. 2 W D.C.: • Frequency range: 50 Hz - 10 kHz • Test voltage (rms): 10% of supply, max. 2 W	• to simulate distortions in the power supply system generated, for instance, by electronic consumers and coupled in as harmonics • performance criterion A (see **(5)**) • see figure "Test set-up" (see **(8)**) • for keeping max. 2W, the voltage of the test signal may be lower
16	Conducted Radio Frequency	IEC 61000-4-6	AC, DC, I/O ports and signal/ control lines Frequency range: 150 kHz - 80 MHz Amplitude: 3 V rms (see **(7)**) Modulation***: 80% AM at 1000 Hz Frequency sweep range: ≤ $1,5.10^{-3}$ decades/s (or 1% / 3sec.) According to test level 2	• to simulate electromagnetic fields coupled as high frequency into the test specimen via the connecting lines • performance criterion A (see**(5)**) *** If, for tests of equipment, an input signal with a modulation frequency of 1000 Hz is necessary, a modulation frequency of 400 Hz should be chosen
17	Electrical Fast Transients / Burst	IEC 61000-4-4	Single pulse time: 5ns (between 10% and 90% value) Single pulse width: 50 ns (50% value) Amplitude (peak): 2 kV line on power supply port/earth; 1 kV on I/O data control and communication ports (coupling clamp) Pulse period: 300 ms Burst duration: 15 ms Duration/polarity: 5 min According to test level 3	• arcs generated when actuating electrical contacts • interface effect occurring on the power supply, as well as at the external wiring of the test specimen • performance criterion B (see**(4)**)

No.	Test	Procedure **(6)**	Test parameters	Other information
18	Surge	IEC 61000-4-5	Test applicable to AC and DC power ports. Open-circuit voltage: • Pulse rise time: 1,2 µs (front time) • Pulse width: 50 µs (time of half value) • Amplitude (peak): 1 kV line/ earth; 0,5kV line/line Short circuit current: • Pulse rise time: 8 µs (front time) • Pulse width: 20 µs (time of half value) Repetition rate: ≥ 1 pulse/min No of pulses: 5 per polarity Application: continuous According to test level 2	• to simulate interference generated, for instance, by switching "ON" or "OFF" high power inductive consumers • test procedure in accordance with figure 10 of the standard for equipment where power and signal lines are identical • performance criterion B (see**(4)**)
19	Radiated Emission	CISPR 16-2-3 IEC 60945 for 156-165 MHz	Limits below 1000 MHz: • For equipment installed in the bridge and deck zone: Frequency range (MHz): / Quasi peak limits (dBµV/m): 0,15 - 0,30 / 80- 52 0,30 - 30 / 52- 34 30 - 1000 / 54 except for: 156 - 165 / 24 • For equipment installed in the general power distribution zone: Frequency range (MHz): / Quasi peak limits (dBµV/m): 0,15 - 30 / 80 - 50 30 - 100 / 60 - 54 100 - 1000 / 54 except for: 156 - 165 / 24 Limit above 1000 MHz: Frequency range (MHz): / Average limit (dBµV/m): 1000 - 6000 / 54	• procedure in accordance with the standard but distance 3 m between equipment and antenna • for the frequency band 156 MHz to 165 MHz the measurement is to be repeated with a receiver bandwidth of 9 kHz (as per IEC 60945) • alternatively the radiation limit at a distance of 3 m from the enclosure port over the frequency 156 MHz to 165 MHz shall be 30 dB micro-V/m peak (as per IEC 60945) • procedure in accordance with the standard (distance 3 m between equipment and antenna). Equipment intended to transmit radio signals for the purpose of radio communication (e.g. wifi router, remote radio controller) may be exempted from limit, within its communication frequency range, subject to the provisions in Ch 3, Sec 3, [4.6]

No.	Test	Procedure **(6)**	Test parameters	Other information
20	Conducted Emission	CISPR 16-2-1	Test applicable to AC and DC power ports • For equipment installed in the bridge and deck zone: Frequency range: / Limits: (dBµV) 10 - 150 kHz: 96 - 50 150 - 350 kHz: 60 - 50 0,35 - 30 MHz: 50 • For equipment installed in the general power distribution zone: Frequency range: / Limits: (dBµV) 10 - 150 kHz: 120 - 69 150 - 500 kHz: 79 0,50 - 30 MHz: 73	
21	Flame retardant	IEC 60092-101 or IEC 60695-11-5	Flame application: 5 times 15 s each Interval between each application: 15 s or 1 time 30 s	• the burnt out or damaged part of the specimen by not more than 60mm long • no flame, no incandescence or in the event of a flame or incandescence being present, it shall extinguish itself within 30 s of the removal of the needle flame without full combustion of the test specimen • any dripping material shall extinguish itself in such a way as not to ignite a wrapping tissue. The drip height is 200 mm ± 5 mm

(1) Dry heat at 70 °C is to be carried out to automation, control and instrumentation equipment subject to high degree of heat, for example mounted in consoles, housings, etc. together with other heat dissipating power equipment.

(2) For equipment installed in non-weather protected locations or cold locations, test is to be carried out at –25°C.

(3) Salt mist test is to be carried out for equipment installed in weather exposed areas.

(4) Performance criterion B: (for transient phenomena): The Equipment Under Test shall continue to operate as intended after the tests. No degradation of performance or loss of function is allowed as defined in the technical specification published by the Manufacturer. During the test, degradation or loss of function or performance which is self recoverable is however allowed but no change of actual operating state or stored data is allowed.

(5) Performance criterion A (for continuous phenomena): The EUT shall continue to operate as intended during and after the test. No degradation of performance or loss of function is allowed as defined in relevant equipment standard and the technical specification published by the Manufacturer.

(6) Column 3 indicates the testing procedure which is normally to be applied. However, equivalent testing procedure may be accepted by the Society provided that what is required in the other columns is fulfilled.

(7) For equipment installed on the bridge and deck zone, the test levels shall be increased to 10V rms for spot frequencies in accordance with IEC 60945 at 2,3,4,6.2, 8.2, 12.6, 16.5, 18.8, 22, 25 MHz.

(8) Figure - Test set-up for Conducted Low Frequency - Refer to IEC 60945 (1996).

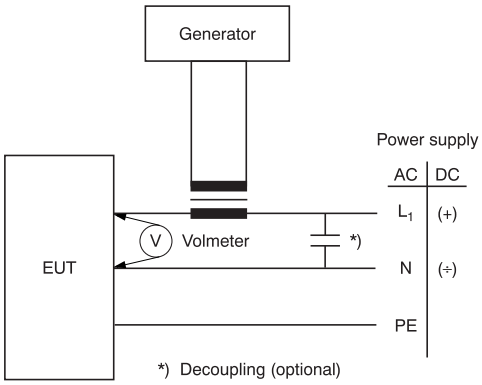

(9) See [2.2.2], Note 1.

2.3.4 In case of separate approval of software, an assessment certificate may be issued, at the request of the manufacturer, based on the requirements of the appropriate system category.

2.4 Loading instruments

2.4.1 Loading instrument approval consists of:

- approval of hardware according to [2.2], unless two computers are available on board for loading calculations only
- approval of basic software according to [2.3]
- approval of application software, consisting in data verification which results in the Endorsed Test Condition according to Part B
- installation testing according to Article [4].

2.5 Oil mist detection system

2.5.1 Type test of oil mist detection system are to be carried out according to Ship rules Pt C, Ch 3, App 1.

3 Acceptance testing

3.1 General

3.1.1 Acceptance tests are generally to be carried out at the manufacturer's facilities before the shipment of the equipment, when requested.

Acceptance tests refer to hardware and software tests as applicable.

3.2 Tests and evidence

3.2.1 Tests and evidence are to be in accordance with Tab 2. Definitions and notes relating to Tab 2 are given in Ch 3, Sec 1, [1.3.1].

Table 2 : Tests and evidence according to the system category

No.	Tests and evidence		System category **(1)**		
			I	II	III
1.	Evidence of quality system	Quality plan for software		M	M
		Inspection of components (only hardware) from sub-suppliers		M	M
		Quality control in production		M	M
		Final test reports	M	M	S
		Traceability of software	M	M	S
2.	Hardware and software description	Software description		M	S
		Hardware description		M	S
		Failure analysis for safety related functions only			S
3.	Evidence of software testing	Evidence of software testing according to quality plan		M	S
		Analysis regarding existence and fulfilment of programming procedures for safety related functions			S
4.	Hardware tests	Tests according to Tab 1	M	S/W	S/W
5.	Software tests	Module tests		M	S
		Subsystem tests		M	S
		System test		M	S
6.	Performance tests	Integration test		M	W
		Fault simulation		W	W
		Factory Acceptance Test (FAT)	M	W	W
7.	On board tests	Complete system test	M	W	W
		Integration test		W	W
		Operation of wireless equipment to demonstrate electromagnetic compatibility		W	W*
8.	Modifications	Tests after modifications	M	S/W	S/W

(1) M : Evidence kept by manufacturer and submitted on request
S : Evidence checked by the Society
W : To be witnessed by the Society
* : The level of witnessing is to be determined during the assessment required by Ch 3, Sec 3, [1.1.5].

3.3 Hardware testing

3.3.1 Final acceptance will be granted subject to:

- the results of the tests listed in [3.3.2]
- the type test report or type approval certificate.

3.3.2 Hardware acceptance tests include, where applicable:

- visual inspection
- operational tests and, in particular:
  - tests of all alarm and safety functions
  - verification of the required performance (range, calibration, repeatability, etc.) for analogue sensors
  - verification of the required performance (range, set points, etc.) for on/off sensors
  - verification of the required performance (range, response time, etc.) for actuators
  - verification of the required performance (full scale, etc.) for indicating instruments
- endurance test (burn-in test or equivalent)
- high voltage test
- hydrostatic tests.

Additional tests may be required by the Society.

3.4 Software testing

3.4.1 Software acceptance tests of computer based systems are to be carried out to verify their adaptation to their use on board, and concern mainly the application software.

3.4.2 The software modules of the application software are to be tested individually and subsequently subjected to an integration test. The test results are to be documented and to be part of the final file. It is to be checked that:

- the development work has been carried out in accordance with the plan
- the documentation includes the method of testing, the test programs producing, the simulation, the acceptance criteria and the result.

Software module tests are to provide evidence that each module performs its intended function and does not perform unintended functions.

Subsystem testing is to verify that modules interact correctly to perform the intended functions and do not perform unintended functions.

System testing is to verify that subsystems interact correctly to perform the functions in accordance with specified requirements and do not perform unintended functions.

Repetition tests may be required to verify the consistency of test results.

3.4.3 Analysis regarding existence and fulfilment of programming procedures for safety related functions

Specific assurance methods are to be planned for verification and validation of satisfaction of requirements, e.g.:

- diverse programs
- program analysis and testing to detect formal errors and discrepancies to the description
- simple structure.

3.4.4 The Society may ask for additional tests of systems which are part of safety systems or which integrate several functions.

3.4.5 Integration tests

Programmable electronic system integration testing is to be carried out using satisfactorily tested system software and, as far as practicable, intended system components.

3.4.6 Fault simulation

Faults are to be simulated as realistically as possible to demonstrate appropriate system fault detection and system response. The results of any required failure analysis are to be observed.

3.4.7 Factory Acceptance Test (FAT)

Factory acceptance testing is be carried out in accordance with a test program accepted by the Society. Testing is to be based on demonstrating that the system fulfils the requirements specified by the Society.

3.4.8 Modifications

Modifications to approved systems are to be notified in advance and carried out to the Society's satisfaction. Refer to Ch 3, Sec 1, [2.4.2].

4 On board tests

4.1 General

4.1.1 Testing is to be performed on the completed system comprising actual hardware components with the final application software, in accordance with an approved test program.

4.1.2 On board tests are to be carried out on automation systems associated with essential services to verify their compliance with the Rules, by means of visual inspection and the performance and functionality according to Tab 3.

On board testing is to verify that correct functionality has been achieved with all systems integrated.

When completed, automation systems are to be such that a single failure, for example loss of power supply, is not to result in a major degradation of the services essential to the safety of the unit. In addition, a blackout test is to be carried out to show that automation systems are continuously supplied.

Upon completion of on board tests, test reports are to be made available to the Surveyor.

4.1.3 For wireless data communication equipment, tests during harbour and sea trials are to be conducted to demonstrate that radio-frequency transmission does not cause failure of any equipment and does not itself fail as a result of electromagnetic interference during expected operating conditions.

Note 1: Where electromagnetic interference caused by wireless data communication equipment is found to be causing failure of equipment required for Category II or III systems, the layout and/or equipment are/is to be changed to prevent further failures occurring.

Table 3 : On board tests

Equipment	Nature of tests
Electronic equipment	Main hardware and software functionalities with all systems integrated
Analogue sensors	Signal calibration, trip set point adjustment
On/off sensors	Simulation of parameter to verify and record the set points
Actuators	Checking of operation in whole range and performance (response time, pumping)
Reading instruments	Checking of calibration, full scale and standard reference value

Section 7 Unattended Machinery Spaces (AUTO)

1 General

1.1 Application

1.1.1 The additional class notation **AUTO** is assigned in accordance with Pt A, Ch 1, Sec 2, [8.3.14] to units fitted with automated installations enabling periodically unattended operation of machinery spaces, and complying with the requirements of this Section.

Note 1: Machinery spaces are defined in Ch 1, Sec 1, [1.3.2].

1.1.2 For propelled units, requirements relative to propulsion, detailed in additional notation **AUT-UMS** in the Ship Rules, are applicable.

1.1.3 *The arrangements provided shall be such as to ensure that the safety of the unit in all operating conditions, including manoeuvring and sailing, is equivalent to that of a unit having the machinery spaces manned.*

1.1.4 Automation of process and drilling systems, if any, are outside the scope of the present Section.

1.2 Communication system

1.2.1 *A reliable means of vocal communication shall be provided between the main machinery control room and the engineer officers' accommodation.*

This means of communication is to be foreseen in collective or individual accommodation of engineer officers.

1.2.2 Means of communication are to be capable of being operated even in the event of failure of supply from the main source of electrical power.

2 Documentation

2.1 Documents to be submitted

2.1.1 In addition to those mentioned in Ch 3, Sec 1, Tab 1, the documents in Tab 1 are required.

Table 1 : Documents to be submitted

No.	I/A **(1)**	Document
1	A	Means of communication diagram
2	A	Technical description of automatic engineer's alarm and connection of alarms to accommodation, when applicable
3	A	System of protection against flooding
4	A	Fire detection system: diagram, location and cabling
(1) A = To be submitted for approval ; I = To be submitted for information		

3 Fire and flooding precautions

3.1 Fire prevention

3.1.1 *Where daily service oil tanks are filled automatically, or by remote control, means shall be provided to prevent overflow spillages.*

3.1.2 The requirements regarding piping and arrangements of fuel oil and lubricating oil systems given in Ch 1, Sec 8, Ch 1, Sec 2 and Ch 1, Sec 7 are applicable.

3.1.3 Fuel oil and lubricating oil purifiers and the auxiliary equipment and its fittings containing hot fuel oil are to be grouped in a special room or in locations ventilated by extraction; nevertheless, transfer pumps may be located outside this room.

3.1.4 Where heating is necessary, it is to be arranged with automatic control. A high temperature alarm is to be fitted and the possibility of adjusting its threshold according to the fuel quality is to be provided. Such alarm may be omitted if it is demonstrated that the temperature in the tank cannot exceed the flashpoint under the following conditions: volume of liquid corresponding to the low level alarm and maximum continuous heating power during 24 hours.

3.1.5 For arrangement of remote stops, the requirements in Ch 4, Sec 4, [5.5.5] and in Pt D, Ch 1, Sec 18 are applicable. The operation is to be possible from a permanently manned control station.

3.2 Fire detection

3.2.1 For fire detection, the requirements given in Ch 4, Sec 5 are applicable.

3.2.2 *Means are to be provided to detect and give alarms at an early stage in case of fires:*

- *in boiler air supply casing and exhausts (uptakes),*

unless the Society considers this to be unnecessary in a particular case.

3.2.3 An automatic fire detection system is to be fitted in machinery spaces as defined in Ch 1, Sec 1, [1.3.1] intended to be unattended.

3.2.4 The fire detection system is to be designed with self-monitoring properties. Power or system failures are to initiate an audible alarm distinguishable from the fire alarm.

3.2.5 The fire detection indicating panel is to be located in a permanently manned control station or other accessible place where a fire in the machinery space will not render it inoperative.

3.2.6 The fire detection indicating panel is to indicate the place of the detected fire in accordance with the arranged fire zones by means of a visual signal. Audible signals clearly distinguishable in character from any other signals are to be audible throughout a permanently manned control station and the accommodation area of the personnel responsible for the operation of the machinery space.

3.2.7 Fire detectors are to be of such type and so located that they will rapidly detect the onset of fire in conditions normally present in the machinery space. Consideration is to be given to avoiding false alarms. The type and location of detectors are to be approved by the Society and a combination of detector types is recommended in order to enable the system to react to more than one type of fire symptom.

3.2.8 Except in spaces of restricted height and where their use is specially appropriate, detection systems using thermal detectors only are not permitted. Flame detectors may be installed, although they are to be considered as complementary and are not to replace the main installation.

3.2.9 Fire detector zones are to be arranged in a manner that will enable the operating staff to locate the seat of the fire. The arrangement and the number of loops and the location of detector heads are to be approved in each case. Air currents created by the machinery are not to render the detection system ineffective.

3.2.10 When fire detectors are provided with the means to adjust their sensitivity, necessary arrangements are to be allowed to fix and identify the set point.

3.2.11 When it is intended that a particular loop or detector is to be temporarily switched off, this state is to be clearly indicated. Reactivation of the loop or detector is to be performed automatically after a preset time.

3.2.12 The fire detection indicating panel is to be provided with facilities for functional testing.

3.2.13 The fire detecting system is to be fed automatically from the emergency source of power by a separate feeder if the main source of power fails.

3.2.14 Facilities are to be provided in the fire detecting system to manually release the fire alarm from the following places:

- passageways having entrances to engine and boiler rooms
- the control station in the engine room.

3.2.15 The detection equipment is to be so designed as to signal in less than 3 minutes a conventional seat of fire resulting from the combustion of 500 g textile waste impregnated with 25 cl of diesel oil in a square gutterway 30 cm wide x 15 cm high. Alternative means of testing may be accepted at the discretion of the Society.

3.3 Fire fighting

3.3.1 Unless otherwise stated, pressurisation of the fire main at a suitable pressure by starting a main fire pump and carrying out the other necessary operations is to be possible from the permanently manned control station. Alternatively, the fire main system may be permanently under pressure.

3.3.2 In addition to the fire-extinguishing arrangements mentioned in Part C, Chapter 4, periodically unattended spaces containing steam turbines (whose power is at least 375 kW) are to be provided with one of the fixed fire-extinguishing systems required in the same chapter for machinery spaces of category A containing oil fired boilers or fuel oil units.

3.3.3 Local application fire extinguishing systems provided in machinery spaces of category A are to have an automatic release capability in addition to the manual release.

3.4 Protection against flooding

3.4.1 Bilge wells or machinery spaces bilge levels are to be monitored in such a way that the accumulation of liquid is detected in normal angles of trim and heel, and are to be large enough to accommodate easily the normal drainage during the unattended period.

3.4.2 *Where the bilge pumps are capable of being started automatically, means shall be provided to indicate when the influx of liquid is greater than the pump capacity or when the pump is operating more frequently than would normally be expected.*

3.4.3 *The location of the controls of any valve serving a sea inlet, a discharge below the waterline or a bilge injection system shall be so sited as to allow adequate time for operation in case of influx of water to the space, having regard to the time likely to be required in order to reach and operate such controls. If the level to which the space could become flooded with the unit in the fully loaded condition so requires, arrangements shall be made to operate the controls from a position above such level.*

A calculation is to be carried out to show that the time taken from alarm activation plus the time to reach and fully close manually operated or powered valves is less than the time taken for the influx of water to reach the control without submergence of the platform on which the person is operating the valves. If necessary a remote control device is to be fitted above the level.

Note 1: The time it takes for the influx of water to reach the control of valves should be based on a breach in the largest diameter seawater line in the lowest location in the engine room when the unit is fully loaded.

Note 2: The time it takes to reach the sea valves should be determined based on the distance between the navigation bridge and the platform from where the valves associated with the aforementioned seawater line are manually operated (or the actuator for valves controlled by stored mechanical energy).

Note 3: In the event calculations are not available, 10 minutes shall be regarded as adequate time for operation unless other requirements are specified by the flag Administration.

3.4.4 Bilge level alarms are to be given at the main control station.

3.4.5 Alarm is to be given to the a permanently manned control station in case of flooding into the machinery space situated below the load line.

4 Control of machinery

4.1 General

4.1.1 All manual operations or services expected to be carried out with a periodicity of less than 24 h are to be eliminated or automated, particularly for: lubrication, topping up of make up tanks and filling tanks, filter cleaning, cleaning of centrifugal purifiers, drainage, load sharing on main engines and various adjustments. Nevertheless, the transfer of operation mode may be effected manually.

4.1.2 *A centralised control position shall be arranged with the necessary alarm panels and instrumentation indicating any alarm.*

4.1.3 Parameters for essential services which need to be adjusted to a preset value are to be automatically controlled.

4.1.4 *The control system shall be such that the services needed for the operation of the essential services are ensured through the necessary automatic arrangements.*

4.1.5 *It shall be possible for all machinery essential for the safe operation of the unit to be controlled from a local position, even in the case of failure in any part of the automatic or remote control systems.*

4.2 Auxiliary system

4.2.1 *Where standby machines are required for essential services, automatic changeover devices shall be provided.*

Change-over restart is to be provided for the following systems:

- cylinder cooling of diesel generating sets (where the circuit is common to several sets)
- diesel generating sets fuel supply (where the circuit is common to several sets)
- sea water to main condenser (main turbines)
- thermal fluid systems (thermal fluid heaters).

4.2.2 When a standby machine is automatically started, an alarm is to be activated.

4.2.3 *Where daily service fuel oil tanks are filled automatically, or by remote control, means shall be provided to prevent overflow spillages.*

4.2.4 Arrangements are to be provided to prevent overflow spillages coming from equipment treating flammable liquids.

4.2.5 *Where daily service fuel oil tanks or settling tanks are fitted with heating arrangements, a high temperature alarm shall be provided if the flashpoint of the fuel oil can be exceeded.*

4.2.6 For auxiliary systems, the following parameters, according to Tab 2 to Tab 13 are to be monitored or controlled.

Table 2 : Incinerators

Symbol convention H = High, HH = High high, G = group alarm L = Low, LL = Low low, I = individual alarm X = function is required	Monitoring	Automatic control				
		Incinerator			Auxiliary	
Identification of system parameter	Alarm	Slow-down	Shut-down	Control	Standby Start	Stop
Combustion air pressure	L		X			
Flame failure	X		X			
Furnace temperature	H		X			
Exhaust gas temperature	H					
Fuel oil pressure	L					
Fuel oil temperature or viscosity, where heavy fuel is used	H + L					

Table 3 : Auxiliary boilers

Symbol convention H = High, HH = High high, G = group alarm L = Low, LL = Low low, I = individual alarm X = function is required	Monitoring	Automatic control				
		Boiler			Auxiliary	
Identification of system parameter	Alarm	Slow-down	Shut-down	Control	Standby Start	Stop
Water level	L + H		X	X		
Fuel oil temperature or viscosity, where heavy fuel is used	L + H		X	X		
Flame failure	X					
			X			
Combustion air supply fan low pressure			X			
Temperature in boiler casing (fire)	H					
Steam pressure	H **(1)**		X	X		
Steam temperature			X **(2)**			
(1) When the automatic control does not cover the entire load range from zero load. **(2)** For superheated steam over 330°C.						

Table 4 : Fuel oil system

Symbol convention H = High, HH = High high, G = group alarm L = Low, LL = Low low, I = individual alarm X = function is required,	Monitoring	Automatic control				
		System			Auxiliary	
Identification of system parameter	Alarm	Slow-down	Shut-down	Control	Standby Start	Stop
Fuel oil tank level, overflow	H **(1)**					
Air pipe water trap level on fuel oil tanks	H **(2)**					
Heater outlet fuel oil temperature				X		
	H **(4)**		X **(5)**			
Sludge tank level	H					
Fuel oil settling tank level	H **(1)**					
Fuel oil settling tank temperature **(3)**	H			X		
Fuel oil centrifugal purifier overflow	H		X **(6)**			
Fuel oil in daily service tank level	L					
Fuel oil daily service tank temperature **(3)**	H			X		
Fuel oil in daily service tank level (to be provided if no suitable overflow arrangement)	H **(1)**					
(1) Or sight-glasses on the overflow pipe. **(2)** Or alternative arrangement as per Ch 1, Sec 7, [9.1.7]. **(3)** Applicable where heating arrangements are provided. **(4)** Or low flow alarm in addition to temperature control when heated by steam or other media. **(5)** Cut off of electrical power supply when electrically heated. **(6)** Shutdown of the fuel oil supply.						

Table 5 : Lubricating oil system

Symbol convention H = High, HH = High high, G = group alarm L = Low, LL = Low low, I = individual alarm X = function is required	Monitoring	Automatic control				
		System			Auxiliary	
Identification of system parameter	Alarm	Slow-down	Shut-down	Control	Standby Start	Stop
Air pipe water trap level of lubricating oil tank see Ch 1, Sec 7, [9.1.7]	H					
Sludge tank level	H					
Lubricating oil centrifugal purifier overflow	H		X **(1)**			
(1) Shutdown of the lubricating oil supply.						

Table 6 : Thermal oil system

Symbol convention H = High, HH = High high, G = group alarm L = Low, LL = Low low, I = individual alarm X = function is required	Monitoring	Automatic control				
		System			Auxiliary	
Identification of system parameter	Alarm	Slow-down	Shut-down	Control	Standby Start	Stop
Thermal fluid temperature heater outlet	H					
	HH		X **(1)**			
Thermal fluid pressure pump discharge **(4)**	H		X			
Thermal fluid flow through heating element	L				X	
	LL		X **(1)**			
Expansion tank level	L					
	LL		X **(2)**			
Expansion tank temperature	H					
Combustion air pressure	L		X			
Fuel oil pressure	L					
Fuel oil temperature or viscosity **(3)**	H + L					
Burner flame failure	X		X			
Flue gas temperature heater outlet	H					
	HH		X **(2)**			
(1) Shut-off of heat input only. **(2)** Shut-off of heat input and delayed stop of fluid flow. **(3)** Where heavy fuel is used. **(4)** Not applicable to centrifugal pumps.						

Table 7 : Hydraulic oil system

Symbol convention H = High, HH = High high, G = group alarm L = Low, LL = Low low, I = individual alarm X = function is required	Monitoring	Automatic control				
		System			Auxiliary	
Identification of system parameter	Alarm	Slow-down	Shut-down	Control	Standby Start	Stop
Pump pressure	H					
Service tank level	L					X **(1)**
(1) The automatic stop of the hydraulic pumps is to be operated in the same circumstances, except where this stop can lead to propulsion stop.						

Table 8 : Boiler feed and condensate system for auxiliary boiler

Symbol convention H = High, HH = High high, G = group alarm L = Low, LL = Low low, I = individual alarm X = function is required	Monitoring	Automatic control				
		System			Auxiliary	
Identification of system parameter	Alarm	Slow-down	Shut-down	Control	Standby Start	Stop
Sea water flow in condenser or equivalent	L				X	
Vacuum in condenser **(2)**	L					
	LL		X			
Water level in main condenser (unless justified)	H + L					
				X		
	HH		X			
Salinity of condensate	H					
Feed water pump delivery pressure	L				X	
Feed water tank level	L					
Deaerator inside temperature or pressure **(2)**	L + H **(1)**					
Water level in deaerator **(2)**	L + H					
Extraction pump pressure **(2)**	L					
Drain tank level	L + H					
(1) In the case of forced circulation boiler. **(2)** When installed.						

Table 9 : Compressed air system

Symbol convention H = High, HH = High high, G = group alarm L = Low, LL = Low low, I = individual alarm X = function is required	Monitoring	Automatic control				
		System			Auxiliary	
Identification of system parameter	Alarm	Slow-down	Shut-down	Control	Standby Start	Stop
Air temperature at compressor outlet	H					
Compressor lubricating oil pressure (except where splash lubrication)	LL		X			
Control air pressure **(3)**	L					
				X		
Starting air pressure before main shut-off valve	L **(1)(2)**					
				X		
	X				X	
Safety air pressure **(3)**	L					
				X		
(1) Local indication. Remote indication is required if starting of air compressor is remote controlled, from wheelhouse for example. **(2)** For starting air, the alarm minimum pressure set point is to be so adjusted as to enable at least three starts per engine. **(3)** When supplied through reducing valve, see Ch 1, Sec 7, [2.6.4].						

Table 10 : Cooling system

Symbol convention H = High, HH = High high, G = group alarm L = Low, LL = Low low, I = individual alarm X = function is required	Monitoring	Automatic control				
		System			Auxiliary	
Identification of system parameter	Alarm	Slow-down	Shut-down	Control	Standby Start	Stop
Sea water pump pressure or flow	X				X	
	L					
Fresh water pump pressure or flow	X				X	
	L					
Level in cooling water expansion tank	L					

Table 11 : Control and monitoring of auxiliary electrical systems

Symbol convention H = High, HH = High high, G = group alarm L = Low, LL = Low low, I = individual alarm X = function is required	Monitoring	Automatic control				
		Main engine			Auxiliary	
Identification of system parameter	Alarm	Slow-down	Shut-down	Control	Standby Start	Stop
Electric circuit, blackout	X					
Power supply failure of control, alarm and safety system	X					

Table 12 : Auxiliary reciprocating I.C. engines driving generators

Symbol convention H = High, HH = High high, G = group alarm L = Low, LL = Low low, I = individual alarm X = function is required	Monitoring	Automatic control				
		Engine			Auxiliary	
Identification of system parameter	Alarm	Slow-down	Shut-down	Control	Standby Start	Stop
Fuel oil viscosity or temperature before injection (for engine running on heavy fuel)	L + H					
				X		
Common rail fuel oil pressure	L					
Fuel oil leakage from pressure pipes	H					
Lubricating oil temperature	H					
Lubricating oil pressure	L				X **(5)**	
	LL		X **(1)**			
Oil mist concentration in crankcase **(2)**	H		X			
Crankcase oil mist detector failure	X					
Exhaust gas temperature after each cylinder **(3)**	H	X				
Turbocharger lubricating oil inlet pressure **(3)(4)**	L					
Common rail servo oil pressure	L					
Pressure or flow of cooling system, if not connected to main system	L					
Temperature of cooling medium	H					
Level in cooling water expansion tank, if not connected to main system	L					
Engine speed				X		
	H		X **(6)**			
Fault in the electronic governor system	X					

(1) Not applicable to emergency generator set.
(2) For engines having a power of more than 2250 kW or a cylinder bore of more than 300 mm.
(3) For engine power > 500 kW/cyl.
(4) If without integrated self contained oil lubricating system.
(5) When a stand by pump is required.
(6) Not applicable to emergency generator set of less than 220 kW.

Table 13 : Auxiliary gas turbine driving generators

Symbol convention H = High, HH = High high, G = group alarm L = Low, LL = Low low, I = individual alarm X = function is required	Monitoring	Automatic control				
		Turbine			Auxiliary	
Identification of system parameter	Alarm	Slow-down	Shut-down	Control	Standby Start	Stop
Lubricating oil system						
• Turbine supply pressure	L	X			X	
	LL		X			
• Differential pressure across lubricating oil filter	H					
• Bearing or lubricating oil (discharge) temperature	H					
Mechanical monitoring of gas turbine						
• Speed				X		
	H		X			
• Vibration	H					
	HH		X			
• Rotor axial displacement (not applicable to roller bearing)	H					
	HH		X			
• Number of cycles performed by rotating parts	H					
Gas generator monitoring system						
• Flame and ignition failure			X			
• Fuel oil supply pressure	L					
• Fuel oil supply temperature	H + L					
				X		
• Cooling medium temperature	H					
• Exhaust gas temperature or gas temperature in specific locations of flow gas path (alarm before shutdown)	H					
	HH		X			
• Pressure at compressor inlet (alarm before shutdown)	L					
Miscellaneous						
• Control system failure	X					
• Automatic starting failure	X					

4.3 Control of electrical installation

4.3.1 *Where the electrical power can normally be supplied by one generator, suitable load shedding arrangement shall be provided to ensure the integrity of supplies to services required for the safety of the unit.*

4.3.2 Following a blackout, automatic connection of the standby generating set is to be followed by an automatic restart of the essential electrical services which are essential to ensure the safety of the unit. If necessary, time delay sequential steps are to be provided to allow satisfactory operation.

4.3.3 Monitored parameters for which alarms are required to identify machinery faults and associated safeguards are listed in Tab 11 and Tab 12. These alarms are to be indicated at the control location for machinery as individual alarms; where the alarm panel with all individual alarms is installed on the engine or in the vicinity, a common alarm in the control location for machinery is required. For communication of alarms from the machinery space to permanently manned control station area and accommodation for engineering personnel, detailed requirements are contained in Article [5].

5 Alarm system

5.1 General

5.1.1 A system of alarm displays and controls is to be provided which readily allows identification of faults in the machinery and satisfactory supervision of related equipment. This may be arranged at a main control station or, alternatively, at subsidiary control stations. In the latter case, a master alarm display is to be provided at the main control station showing which of the subsidiary control stations is indicating a fault condition.

5.1.2 Unless otherwise justified, separation of monitoring and control systems is to be provided.

5.2 Alarm system design

5.2.1 The alarm system is to be designed to function independently of control and safety systems, so that a failure or malfunction of these systems will not to prevent the alarm system from operating. Common sensors for alarms and automatic slowdown functions are acceptable as specified in each specific table.

5.2.2 The alarm system should be able to indicate at the same time more than one fault and the acceptance of any alarm should not inhibit another alarm.

5.2.3 The alarm system and associated sensors are to be capable of being tested during normal machinery operation.

5.2.4 Insulation faults on any circuit of the alarm system are to generate an alarm, when an insulated earth distribution system is used.

5.2.5 The alarm system is to have a connection to the engineers' public rooms and to each of the engineers' cabins through a selector switch, to ensure connection to at least one of those cabins.

5.2.6 An engineers' alarm is to be activated when the machinery alarm has not been accepted in the machinery spaces or control room within 5 minutes.

5.2.7 Requirements [5.2.5] and [5.2.6] may be omitted for units where machinery installation are under continuous supervision from the centralized control position. Means to check the operator alertness is to be provided, when alone.

5.3 Machinery alarm system

5.3.1 The local silencing of the alarms in accommodation spaces is not to stop the audible machinery space alarm.

5.3.2 Machinery faults are to be indicated at the control locations for machinery.

6 Safety systems

6.1 General

6.1.1 Safety systems of different units of the machinery plant are to be independent. Failure in the safety system of one part of the plant is not to interfere with the operation of the safety system in another part of the plant.

6.1.2 In order to avoid undesirable interruption in the operation of machinery, the system is to intervene sequentially after the operation of the alarm system by:

- starting of standby auxiliaries
- load reduction or shutdown, such that the least drastic action is taken first.

6.1.3 The arrangement for overriding the shutdown of the machinery systems is to be such as to preclude inadvertent operation.

7 Testing

7.1 General

7.1.1 Tests of automated installations are to be carried out according to Ch 3, Sec 6 to determine their operating conditions. The details of these tests are defined, in each case, after having studied the concept of the automated installations and their construction. A complete test program is to be submitted for approval.

7.1.2 The tests of equipment carried out alongside the quay under normal conditions of use include, for instance:

- the electrical power generating set
- the auxiliary steam generator
- the automatic bilge draining system
- automatic centrifugal separators or similar purifying apparatus
- automatic change-over of service auxiliaries
- detection of high pressure fuel leaks from diesel generating sets or from flexible boiler burner pipes.

7.1.3 Sea trials are used to demonstrate the proper operation of the automated machinery and systems. For this purpose, for instance, the following tests are to be carried out:

- Test of the operating conditions of the electrical production:
  - automatic starting of the generating set in the event of a blackout
  - automatic restarting of auxiliaries in the event of a blackout
  - load-shedding in the event of generating set overload
  - automatic starting of a generating set in the event of generating set overload.
- Test of fire and flooding system:
  - test of normal operation of the fire detection system (detection, system faults)
  - test of detection in the scavenging air belt and boiler air duct
  - test of the fire alarm system
  - test of protection against flooding.
- Test of operating conditions, including manoeuvring, of the whole machinery in an unattended situation for 6 h.

CHAPTER 4
SAFETY FEATURES

Section 1 General

1 Scope - Classification requirements

1.1 General

1.1.1 Safety features of offshore units intended to be classed by Bureau Veritas are to be designed in compliance with the applicable requirements of the present Chapter, or, subject to a preliminary agreement, in accordance with other particular specifications based on the same principles or applicable National or International Regulations.

Note 1: The attention of the Designer is drawn upon the fact that the present Chapter is intended to be used as specified by a set of Rules for Classification.

Indeed, the present Chapter contains only requirements applicable to a wide range of units and installations, specific requirements being excluded from its scope, as well as references to specific requirements contained in other Rule Notes or Rules.

Using the present Chapter without the support of Rules for Classification applicable to the type and service of unit or installation concerned might therefore lead to a complete misreading of applicable requirements.

1.1.2 The Society may, after special examination, allow alterations or additions to requirements of the present Chapter in certain particular cases relating for instance to small units, units operating in restricted zones or platforms installed in sheltered coastal areas.

1.2 Requirements applicable to piping

1.2.1 Piping and accessories are to comply with the applicable requirements of Part C, Chapter 1 in addition to those given in the present Chapter.

1.3 Surveys and tests

1.3.1 Systems and equipment dealt with in the present Chapter are to be constructed and assembled to the Surveyor's satisfaction, upon application of the Builder, under conditions specified by the applicable Rules for Classification.

1.3.2 Tests of systems and equipment dealt with in the present Chapter are to be carried out as specified in Part C, Chapter 1, as applicable. Refer also to NR266 Survey of Materials and Equipment at Works.

1.3.3 During the trial of the unit or the commissioning of the installation, the Surveyor will check the normal operation of system and equipment dealt with by the present Chapter in order to assess the compliance with rule requirements.

1.3.4 Attention of the Owner and Operator is drawn on the fact that it is their responsibility to maintain the installations and systems mentioned in the present Rules in safe and good working conditions.

2 Statutory requirements

2.1 International Regulations

2.1.1 Attention is directed to the International Regulations the unit or installation may have to comply with, such as, for mobile units:

- IMO Code for the Construction and Equipment of Mobile Offshore Drilling Units (MODU code)
- International Convention for the Safety of Life at Sea (SOLAS)
- International Convention for Prevention of Pollution (MARPOL)
- IMO Code for Fire Safety Systems (FSS Code)
- IMO Code for Application or Fire Test Procedures (FTP Code).

Attention is also draw to the fact that Owners may require compliance to these regulations or parts of them.

2.2 National Authorities requirements

2.2.1 The attention of Owners, designers, builders and other interested parties is drawn to special legal provisions enacted by National Authorities which units or installations may have to comply with according to their flag, type, size, operational site and intended service, as well as other particulars and details.

2.2.2 Classification and statutory requirements

Statutory requirements mentioned in [2.1.1] and in [2.2.1] are to take precedence over the requirements of the present Chapter, as stated in Pt A, Ch 1, Sec 1, [2] and, in case of conflict between this chapter and these requirements, are to be brought to the attention of the Society by the party applying for classification.

In such instances the Society reserves the right to call for the necessary adaptation to preserve the intent of the rule requirements or to refuse or to withdraw the classification of the unit or installation not complying with applicable requirements of the rules.

3 Definitions

3.1 General

3.1.1 Definitions used in the present Chapter are, as a general rule, the ones of MODU Code and SOLAS Convention.

3.2 Machinery spaces, working spaces, hazardous areas

3.2.1 "Machinery spaces of category A" are those spaces and trunks to such spaces which contain either:

- internal combustion machinery used for main propulsion
- internal combustion machinery used for purposes other than main propulsion where such machinery has in the aggregate a total power output of not less than 375 kW, or
- any oil-fired boiler or oil fuel unit, or any oil-fired equipment other than boilers, such as inert gas generators, incinerators, etc.

Note 1: For the purpose of the present requirement and of [3.2.2], an oil fuel unit, according to SOLAS, is defined as an equipment used for the preparation of oil fuel for delivery to an oil-fired boiler, or equipment used for the preparation for delivery of heated oil to an internal combustion engine, and includes any oil pressure pumps, filters and heaters dealing with oil at a pressure of more than 1,8 bar.

Separate spaces provided for the installation of incinerators burning other residues than oil residues are to be considered as machinery spaces of category A.

3.2.2 "Machinery spaces" are machinery spaces of category A and all other spaces containing propelling machinery, boilers and other fired processes, oil fuel units, steam and internal combustion engines, generators and major electrical machinery, oil filling stations, refrigerating, stabilising, ventilation and air-conditioning machinery and similar spaces, and trunks to such spaces.

3.2.3 "Working spaces" are those open or enclosed spaces containing equipment and processes associated with the operation of the unit, which are not included in spaces defined in [3.2.2] or [3.2.4].

3.2.4 "Hazardous areas" are all those areas where, due to the possible presence of a flammable atmosphere, the use without proper consideration of machinery or electrical equipment may lead to fire hazard or explosion. Hazardous areas are further defined in Ch 4, Sec 3.

3.3 Service spaces

3.3.1 "Service spaces (low risk)" are lockers, store-rooms and working spaces in which flammable materials are not stored, drying rooms and laundries.

3.3.2 "Service spaces (high risk)" are lockers, store-rooms and working spaces in which flammable materials are stored, galleys, pantries containing cooking appliances, paint rooms and workshops other than those forming part of the machinery space.

3.3.3

a) Main pantries and pantries containing cooking appliances may contain:
   - toasters, microwave ovens, induction heaters and similar appliances each of them with a power of more than 5 kW; and
   - electrically heated cooking plates and hot plates for keeping food warm each of them with a maximum power of 5 kW.

   These pantries may also contain coffee machines, dish washers and water boilers regardless of their power.

b) Spaces containing any electrically heated cooking plate or hot plate for keeping food warm with a power of more than 5 kW should be regarded as galleys.

3.4 Control stations, central control room

3.4.1 "Control stations" are those spaces in which the unit's radio or main navigating equipment or the emergency source of power is located or where the fire recording or fire control equipment or the dynamic positioning control system is centralised or where a fire-extinguishing system serving various locations is situated. In the case of column stabilized units, a centralised ballast station is a "control station".

3.4.2 "Central control room" is the space where all control, indicator and monitoring functions of the various systems and processes of the unit installations are centralized. The central control room is to be continuously manned.

On mobile units, the central control room is the navigation bridge.

3.5 Accommodation and corridors

3.5.1 "Accommodation spaces" are those used for public spaces, corridors, lavatories, cabins, offices, hospitals, cinemas, games and hobbies rooms, pantries containing no cooking appliances and similar spaces. Public spaces are those portions of the accommodation which are used for halls, dining rooms, lounges and similar permanently enclosed spaces.

3.5.2 Pantries or isolated pantries containing no cooking appliances may contain:

- toasters, microwave ovens, induction heaters and similar appliances each of them with a maximum power of 5 kW; and
- electrically heated cooking plates and hot plates for keeping food warm each of them with a maximum power of 2 kW and a surface temperature not above 150°C.

These pantries may also contain coffee machines, dish washers and water boilers with no exposed hot surfaces regardless of their power.

A dining room containing such appliances should not be regarded as a pantry.

3.6 Deck and bulkhead fire ratings and fire materials

3.6.1 "Non-combustible material" is a material which neither burns nor gives off flammable vapours in sufficient quantity for self-ignition when heated to approximately 750°C, this being determined in accordance with the Fire Test Procedures Code. Any other material is a combustible material.

In general, products made only of glass, concrete, ceramic products, natural stone, masonry units, common metals and metal alloys are considered as being non-combustible and may be installed without testing and approval.

3.6.2 "Low flame-spread" means that the surface thus described is to adequately restrict the spread of flame, this being determined in accordance with the Fire Test Procedures Code.

3.6.3 "Standard fire test" means a test in which specimens of the relevant bulkheads or decks are exposed in a test furnace to temperatures corresponding approximately to the standard time-departure curve in accordance with the test method specified in the Fire Test Procedures Code.

3.6.4 **"**A class divisions" are those divisions formed by bulkheads and decks which comply with the following criteria:

a) they are constructed of steel or other equivalent material

b) they are suitably stiffened

c) they are insulated with approved non-combustible materials such that the average temperature of the unexposed side is not to rise more than 140°C above the original temperature, nor is the temperature, at any one point, including any joint, to rise more than 180°C above the original temperature, within the time listed below:
   - class "A-60": 60 min
   - class "A-30": 30 min
   - class "A-15": 15 min
   - class "A-0": 0 min.

d) they are so constructed as to be capable of preventing the passage of smoke and flame to the end of the one-hour standard fire test, and

e) the Society required a test of a prototype bulkhead or deck in accordance with the Fire Test Procedures Code to ensure that it meets the above requirements for integrity and temperature rise.

3.6.5 **"**B class divisions" are those divisions formed by bulkheads, decks, ceilings or linings which comply with the following criteria:

a) they are constructed of approved non-combustible materials and all materials used in the construction and erection of "B" class divisions are non-combustible, with the exception that combustible veneers may be permitted provided they meet other appropriate requirements of the present Chapter

b) they have an insulation value such that the average temperature of the unexposed side is not to rise more than 140°C above the original temperature, nor is the temperature at any one point, including any joint, to rise more than 225°C above the original temperature, within the time listed below:
   - class "B-15": 15 min.
   - class "B-0": 0 min.

c) they are so constructed as to be capable of preventing the passage of flame to the end of the first half hour of the standard fire test, and

d) the Society required a test of a prototype division in accordance with the Fire Test Procedures Code to ensure that it meets the above requirements for integrity and temperature rise.

3.6.6 **"**C class divisions" are divisions constructed of approved non-combustible materials. They need meet neither requirements relative to the passage of smoke and flame nor limitation relative to the temperature rise. Combustible veneers are permitted provided they meet the requirements of the present Chapter.

3.6.7 "H class divisions" are those divisions formed by bulkheads and decks which comply with the construction and integrity requirements a) and b) for "A" class divisions, and with the following:

a) They are to be so constructed as to be capable of preventing the passage of smoke and flame up to the end of the two hours hydrocarbon fire test

b) They are to be insulated with approved non-combustible materials such that the average temperature, on the unexposed side, when exposed to a hydrocarbon fire test, is not to rise more than 140°C above the original temperature, nor is the temperature at any one point, including any joint to rise more than 180°C above the original temperature within the time listed below:
   - class "H-120": 120 min.
   - class "H-60": 60 min.
   - class "H-0": 0 min.

c) A test of a prototype bulkhead or deck may be required to ensure that it meets the above requirements for integrity and temperature rise.

A "hydrocarbon fire test" is one in which the specimens defined for a standard fire test are exposed in a test furnace to temperatures corresponding approximately to a time temperature relating to, and defined by, a smooth curve drawn through the following temperature points measured above the initial furnace temperature:

- at the end of the first 3 minutes: 880°C
- at the end of the first 5 minutes: 945°C
- at the end of the first 10 minutes: 1032°C
- at the end of the first 15 minutes: 1071°C
- at the end of the first 30 minutes: 1098°C
- at the end of the first 60 minutes: 1100°C.

3.6.8 "Steel or other equivalent material" means steel or any non-combustible material which, by itself or due to insulation provided, has structural and integrity properties equivalent to steel at the end of the applicable fire exposure to the standard fire test (e.g. aluminium alloy with appropriate insulation).

3.6.9 A fan is considered as a "non-sparking fan" if in either normal or abnormal conditions it is unlikely to produce sparks. For this purpose, the following criteria are to be met:

a) Design criteria
   1) The air gap between the impeller and the casing is to be not less than 1/10 of the shaft diameter in way of the impeller bearing and in any case not less than 2 mm, but need not exceed 13 mm.
   2) Protective screens with square mesh of not more than 13 mm are to be fitted to the inlet and outlet of ventilation ducts to prevent objects entering the fan housing.

b) Materials
   1) The impeller and the housing in way of the impeller are to be made of spark-proof materials which are recognised as such by means of an appropriate test to the satisfaction of the Society.
   2) Electrostatic charges, both in the rotating body and the casing, are to be prevented by the use of antistatic materials. Furthermore, the installation on board of ventilation units is to be such as to ensure their safe bonding to the hull.
   3) Tests may not be required for fans having the following material combinations:
      - impellers and/or housings of non-metallic material, due regard being paid to the elimination of static electricity
      - impellers and housings of non-ferrous materials
      - impellers of aluminium alloys or magnesium alloys and a ferrous (including austenitic stainless steel) housing on which a ring of suitable thickness of non-ferrous material is fitted in way of the impeller
      - any combination of ferrous (including austenitic stainless steel) impellers and housings with not less than 13 mm design tip clearance.
   4) The following impeller and housing combinations are considered as sparking and therefore are not permitted:
      - impellers of an aluminium alloy or a magnesium alloy and a ferrous housing, regardless of tip clearance
      - housings made of an aluminium alloy or a magnesium alloy and a ferrous impeller, regardless of tip clearance
      - any combination of ferrous impeller and housing with less than 13 mm design tip clearance.
   5) Complete fans are to be type-tested in accordance with either the Society's requirements or national or international standards accepted by the Society.

3.7 Fire Test Procedures Code

3.7.1 Fire Test Procedures Code means the "International Code for Application of Fire Test Procedures, 2010" (2010 FTP Code), as adopted by the Maritime Safety Committee of the IMO by Resolution MSC.307 (88), as may be amended by the IMO.

3.8 Fire damper

3.8.1 *Fire damper is, for the purpose of implementing requirements of Ch 4, Sec 4, [5], a device installed in a ventilation duct, which under normal conditions remains open allowing flow in the duct, and is closed during a fire, preventing the flow in the duct to restrict the passage of fire. In using the above definition the following terms may be associated:*

a) automatic fire damper is a fire damper that closes independently in response to exposure to fire products

b) manual fire damper is a fire damper that is intended to be opened or closed by the crew by hand at the damper itself; and

c) remotely operated fire damper is a fire damper that is closed by the crew through a control located at a distance away from the controlled damper.

4 Type approved products

4.1 General

4.1.1 The following materials, equipment, systems or products in general used for fire protection are to be of a type approved by the Society, except for special cases for which the acceptance may be given for individual units on the basis of suitable documentation or ad hoc tests:

a) H, A, B class fire divisions (bulkheads or decks) and associated openings

b) C-class divisions

c) materials for pipes penetrating H, A or B class divisions (where they are not of steel or other equivalent material)

d) bulkhead or deck penetrations for electrical cables passing through H, A or B class divisions

e) fire dampers

f) prefabricated sanitary units

g) prefabricated window casings

h) fire door control systems

i) flexible pipes and expansion bellows of non-conventional material for any type of fluid

j) materials with low flame spread characteristic including paints, varnishes and similar, when they are required to have such characteristic

k) non-combustible materials

l) non-readily igniting materials for primary deck coverings

m) fixed foam fire-extinguishing systems and associated foam-forming liquids

n) fixed powder fire-extinguishing systems, including the powder

o) equivalent water-mist fire-extinguishing systems

p) equivalent fixed gas fire-extinguishing systems

q) fixed water-based local application fire-extinguishing systems

r) equivalent water-mist automatic sprinkler systems

s) fixed fire-extinguishing systems for protection of galley cooking equipment

t) portable fire-extinguishers

u) non-portable and transportable fire-extinguishers

v) fire hoses

w) portable foam applicators

x) water and foam monitors

y) foam proportioner/inductor

z) sprinkler heads for automatic sprinkler systems

aa) nozzles for fixed pressure water-spraying fire-extinguishing systems for machinery spaces, boiler rooms, deep-fat cooking equipment fire-extinguishing systems, and spaces intended for the carriage of vehicles and for hangars

ab) sensing heads for automatic fire alarm and fire detection systems

ac) fixed fire detection and fire alarm systems

ad) flammable gas detection systems

ae) explosive mixture detecting systems

af) portable explosive mixture detecting apparatus

ag) fixed instruments for measuring the oxygen content for inert gas systems serving cargo tanks

ah) portable instruments for measuring the oxygen content for inert gas systems serving cargo tanks.

As regards the granting of type approval, the requirements of Part A apply.

The Society may request type approval for other materials, equipment, systems or products required by the applicable provisions for units or installations of special types.

5 Fire safety

5.1 General

5.1.1 The provisions and requirements regarding fire safety are defined in the following Sections:

- Structural fire protection: Ch 4, Sec 4
- Detection, controls, communications and alarms: Ch 4, Sec 5
- Suppression of fire: Fire fighting: Ch 4, Sec 6
- Suppression of fire: Structural integrity: Ch 4, Sec 7
- Means of escape: Ch 4, Sec 8
- Fire plan: Ch 4, Sec 9
- Fire safety provisions for helicopter facilities: Ch 4, Sec 10
- Fire safety systems: Ch 4, Sec 11.

5.2 Alternative design and arrangement

5.2.1 When fire safety design or arrangements deviate from the prescriptive provisions of the Sections referred to in [5.1.1], engineering analysis, evaluation and approval of the alternative design and arrangements should be carried out in accordance with SOLAS regulation II-2/17.

Section 2 Arrangement of Unit or Installation

1 General

1.1 Principles of design

1.1.1 The layout of the unit or installation is to be designed giving due consideration to safety of personnel, prevention of pollution and protection of industrial properties.

1.1.2 The principle of risk segregation is to be applied and potential sources of fuel are to be separated as far as practicable from potential sources of ignition.

1.1.3 The unit or installation is to be so arranged as to minimise the risk of occurrence of accidents, the risk of escalation, to protect the accommodation from the consequences of accidents affecting other areas and to allow a safe evacuation when necessary.

1.2 Risk analyses - Safety level

1.2.1 If deemed necessary by the Society, risk analysis is to be performed to validate the arrangement and to determine the accidental loads equipment and systems are to be capable to withstand. Reference is made in this respect to Recommended Practice API RP 14J for design and hazard analysis for offshore production facilities.

1.2.2 A suitable safety level is to be maintained and verified throughout the life of the unit or installation.

1.2.3 Access is to be provided for maintenance and inspection of hazardous equipment, safety equipment and load bearing structures.

1.2.4 Possible future modifications are to be taken into account as practicable.

2 Location and arrangement of areas

2.1 Relative location and separation of areas

2.1.1 A risk grading principle is to be used: areas with low risk are to be located between areas with high risk and living quarter and control stations.

2.1.2 The different areas are to be separated by a suitable distance or by adequately rated fire and blast bulkheading.

2.2 Location and arrangement of accommodation and control stations

2.2.1 Accommodation and control stations are to be located outside hazardous areas.

2.2.2 Accommodation and control stations are not to be located above wellhead, processing or storage areas.

2.2.3 The accommodation is to have a direct access to the helideck and/or to the boat landing.

2.2.4 Ventilation intakes are to be located so as to minimise the risk of ingress of gas or smoke.

2.3 Arrangement of wellhead area

2.3.1 Wellhead and Christmas tree area is to be protected against mechanical, fire or explosion loads from adjacent areas.

2.4 Location and arrangement of helideck area

2.4.1 As a rule, the helideck is to be located under the prevailing wind of the unit or installation.

2.4.2 Exhaust from turbines, fired equipment engines, flare or vents are to be located so as not to disturb the operation of the helideck.

2.5 Location and arrangement of cranes and lay down areas

2.5.1 Cranes and lay down areas are to be located so as to minimise load lifting over wellhead and process areas.

2.6 General orientation of the unit or installation

2.6.1 The general orientation of the unit or installation is to be as far as practicable such as the living quarter is not located under the prevailing wind of drilling, wellhead, process area, flare or cold vent.

2.6.2 The hazardous areas are not to be as far as practicable under the prevailing wind of the flare.

2.6.3 The general orientation with regard to current is to be as far as practicable such as liquid hydrocarbons leaks will not be pushed towards accommodation.

Section 3 Hazardous Areas

1 Definitions

1.1 Hazardous areas

1.1.1 Hazardous areas are all those areas where, due to the possible presence of a flammable atmosphere, the use without proper consideration of machinery or electrical equipment may lead to fire hazard or explosion.

1.1.2 Under normal operating conditions, a hazardous zone or space may arise from the presence of any of the following:

a) Spaces or tanks containing any of the following:

   1) flammable liquid having a flash point not exceeding 60°C closed-cup test

   2) flammable liquid having a flash point above 60°C closed-cup test, heated or raised by ambient conditions to a temperature within 15°C of its flash point

   3) flammable gas.

b) Piping systems or equipment containing fluid defined in a) and having flanged joints, glands or other fittings through which leakage of fluid may occur.

c) Piping systems or equipment containing flammable liquid not defined in above a) and having flanged joints, glands or other fittings through which leakage of fluid in the form of a fine spray or mist may occur.

d) Equipment associated with processes such as battery charging or electrochlorination which generate flammable gas as a by-product, and having vents or other openings from which gas may be released.

e) Equipment associated with drilling operations.

1.2 Zones

1.2.1 Hazardous areas as defined in [1.1], are divided into zones as follows:

Zone 0 : Zone in which ignitable concentrations of flammable gases or vapours are continuously present or present for long periods

Zone 1 : Zone in which ignitable concentrations of flammable gases or vapours are likely to occur in normal operation

Zone 2 : Zone in which ignitable concentrations of flammable gases or vapours are not likely to occur, or in which such a mixture, if it does occur, will only exist for a short time.

Non-hazardous areas are those which are not classified as hazardous according to the above definitions.

Indication of the frequency of the occurrence and duration may be taken from recognised international codes and standards. Guidance on duration for each “grade of release” (see [1.6]) may be taken from IP Code Part 15 (see [3]), paragraphs 1.5.5.2 and 1.5.4 for a continuously operated plant in open air:

- Zone 0 : Typical for continuous grade source present for more than 1000 hours a year or that occurs frequently for short periods
- Zone 1 : Typical for primary grade source present between 10 and 1000 hours a year
- Zone 2 : Typical for secondary grade source present for less than 10 hours per year and for short periods only.

Conditions of ventilation may change the zone definition for each grade of release. Also, the likehood of detecting the leak may influence the zone.

1.3 Enclosed spaces

1.3.1 Enclosed spaces are spaces delineated by floors, bulkheads and/or decks which may have doors or windows, such that in the absence of artificial ventilation, the ventilation will be limited and any flammable atmosphere will not be dispersed naturally.

1.4 Semi-enclosed spaces

1.4.1 Semi-enclosed locations are locations where natural conditions of ventilation are notably different from those on open decks due to the presence of structures such as roofs, windbreaks or bulkheads, and which are so arranged that dispersion of gas may not occur.

1.5 Open spaces

1.5.1 Open spaces are spaces in open air situation without stagnant areas where vapours are rapidly dispersed by wind and natural convection. Typical air velocities should rarely be less than 0,5 m/s and should frequently be above 2 m/s.

Note 1: If necessary, the Society may refer to Institute of Petroleum publications such as IP 15 § 6 for the relationship between the ventilation and the classification into enclosed, semi-enclosed and open spaces as defined in [1.3] to [1.5].

1.6 Sources of release

1.6.1 Release of explosive gas-air mixtures may be categorized into continuous, primary and secondary grades:

a) Continuous grades of release include the following:
   1) surface of a flammable liquid in a closed tank or pipe
   2) vent or other opening which releases flammable gases or vapours frequently, continuously or for long periods.

b) Primary grades of release include the following:
   1) pumps and compressors with standard seals, and valves, flanges and fittings containing flammable fluids if release of fluid to atmosphere during normal operation may be expected
   2) sample points and process equipment drains which may release flammable fluid to atmosphere during normal operation
   3) pig launcher and receiver doors which are opened frequently
   4) vents which frequently release small quantities, or occasionally release larger quantities, of flammable gases to atmosphere
   5) tanks or openings of the active mud circulating system between the well and the final degasser discharge which may release gas during normal operation
   6) drilling operations in enclosed or semi-enclosed spaces.

c) Secondary grades of release include the following:
   1) pumps and compressors with high integrity seals, and valves, flanges and fittings containing flammable fluids
   2) vents which release flammable gases intermittently to atmosphere
   3) tanks or openings of the mud circulating system from the final degasser discharge to the mud pump connection at the mud pit
   4) drilling, workover and wirelining operations in open spaces.

2 Classification of hazardous areas

2.1

2.1.1 General

a) For the purpose of machinery and electrical installations, hazardous areas are classified as follows. Hazardous areas not covered (such as, but not limited to, well test equipment areas, helicopter fuel storage areas, acetylene cylinder storage areas, battery rooms, paint lockers, flammable gas or vapour vents and diverter line outlets) in the present Article are to be classified in accordance with [1.2].

b) The hazardous areas as specified may be extended or reduced depending on the actual arrangements in each case, by use of windshields, special ventilation arrangements, structural arrangements (e.g. low deck head), etc.

c) Hazardous area classification of offshore mobile drilling units is to comply with the provisions of [2.1.2] to [2.1.4].

2.1.2 Hazardous areas Zone 0

a) The internal spaces of closed tanks and piping for containing active non-degassed drilling mud, oil that has a closed-cup flashpoint below 60°C or flammable gas and vapour, as well as produced oil and gas in which an oil/gas/air mixture is continuously present or present for long periods.

b) Unventilated spaces separated by a single bulkhead or deck from a tank containing flammable liquid or gas.

c) In open spaces, the area within 3 m radius from continuous grades of release.

d) Based on above definitions, Zone 0 includes for example:
   - areas within process apparatus developing gas or vapours
   - areas within enclosed pressure vessels or storage tanks containing oil and gas products
   - areas within 3m radius around vent pipes (releasing flammable gases or vapours) which discharges continuously or for long periods
   - areas over/near surface of flammable liquids in general.

2.1.3 Hazardous areas Zone 1

a) Adequately ventilated closed or semi-enclosed spaces containing primary grades of release. See [1.6], item b).

b) Mechanically ventilated closed spaces separated by a single bulkhead or deck from a tank intended for the storage in bulk of flammable liquid or gas.

c) In open spaces, the area within 3 m radius from primary grades of release and from any ventilation outlet from a Zone 1 space.

d) In open spaces, the area within 3 m from pig launcher and receiver doors. This may be reduced to 1,5 m if the equipment is washed through with nitrogen or water washed before opening.

e) In open or semi-enclosed spaces, the area within 1,5 m of the boundaries of any access to Zone 1.

f) The paint stores and supply and exhaust ventilation ducts serving such spaces.

g) Semi-enclosed spaces, such as inadequately ventilated pits, ducts or similar structure situated in locations which should otherwise be a Zone 2, but where their arrangement is such that gas dispersion cannot easily occur.

h) In open spaces, the area below the drill floor and within a radius of 1,5 m from a possible source of release such as the top of a drilling nipple.

i) Following hazardous area classifications are to be complied with as applicable (generally for mobile offshore drilling units):

   1) enclosed spaces containing any part of the mud-circulating system that has an opening into the spaces and is between the well and the final degassing discharge

   2) enclosed spaces or semi-enclosed locations that are below the drill floor and contain a possible source of release such as the top of a drilling nipple

   3) enclosed spaces that are on the drill floor and which are not separated by a solid floor from the space in item i) 2)

   4) in open or semi-enclosed spaces except as provided for in item i) 2), the area within 1,5 m of the boundaries of any openings to apparatus which is part of the mud system as specified in item i) 1) or any access to Zone 1 spaces and the area within 3 m of any ventilation outlets of Zone 1 spaces.

j) Based on above definitions, Zone 1 includes for example:

   - area above roof and outside sides of storage tanks
   - areas with a 3 m radius around the outlet vent pipes, pipelines and safety lines
   - rooms without ventilation with direct access from a Zone 1 or a Zone 2
   - rooms or parts of rooms containing secondary sources of release, be where internal outlets indicate Zone 2, but where efficient dilution of an explosive atmosphere cannot be expected because of a lack of ventilation
   - areas around ventilation opening from a Zone 1 area
   - area around flexible pipelines and hoses
   - area around sample tacking points (valves, etc.)
   - areas around seals of pumps, compressors, and similar apparatus, if primary source of release.

2.1.4 Hazardous areas Zone 2

a) Adequately ventilated closed or semi-enclosed spaces containing secondary grades of release (see [1.6] item c)).

b) In open spaces, the area within a radius of 3 m from secondary grades of release, any ventilation outlet from a Zone 2 space or from a space ventilated as per [1.5.1] and containing primary grades of release.

c) The area within 1,5 m from flange joints, glands or other fittings or openings as defined in [1.1.2] items c) and d).

d) The area within a 3 m radius from bunds or barriers intended to contain spillage of liquids defined in [1.1.2], item a).

e) In open spaces, the area below the drill floor and within a radius 1,5 m beyond the Zone 1 area.

f) The areas 1,5 m beyond the Zone 1 areas specified in [2.1.3].

g) Areas on open deck within 1 m of inlet and exhaust ventilation openings of paint stores or within 3 m of exhaust mechanical ventilation outlets of such spaces.

h) Open spaces or semi-enclosed spaces within 1,5 m of the boundaries of any access to a Zone 2 space unless [4.1.1] is applicable.

i) Air locks between Zone 1 and a non-hazardous area.

j) Following hazardous area classifications are to be complied with as applicable (generally for mobile offshore drilling units):

   1) enclosed spaces which contain open sections of the mud circulating system from the final degassing discharge to the mud pump suction connection at the mud pit

   2) open locations within the boundaries of the drilling derrick up to a height of 3 m above the drill floor

   3) semi-enclosed locations below and contiguous with the drill floor and to the boundaries of the derrick or to the extent of any enclosure which is liable to trap gases

   4) Outdoor locations below the drill floor, within a radius of 1,5 m area beyond the Zone 1 area as specified in [2.1.3], item h)

   5) the areas 1,5 m beyond the semi-enclosed locations specified in [2.1.3] items i) 2) and i) 4)

   6) semi-enclosed derricks to the extent of their enclosures above the drill floor or to a height of 3 m above the drill floor, whichever is greater.

k) Based on above definitions, Zone 2 includes for example:
- area around flanges, connections, valves, etc.
- areas outside of Zone 1, around the outlet of vent pipes, pipelines and safety valves
- areas around vent openings from Zone 2 area.

2.2 Provisions regarding mobile and fixed offshore units

2.2.1 Pipelines without flanges, connections, valves or other similar fittings are not to be regarded as a source of release.

2.2.2 Certain areas and rooms are to be, if so indicated by the circumstances, classified as more hazardous zones than set out in these examples.

2.2.3 Certain areas and rooms may under certain circumstances and/or when special precautions are taken, be classified as a less hazardous zone than indicated by these examples. Such special circumstances may be, shielding or reinforced ventilation arrangements.

2.2.4 Enclosed rooms, without ventilation, with openings to an area with explosion risks, are to be designed as the same, or as a more hazardous zone than such an area.

2.3 Extension of hazardous areas due to emergency conditions

2.3.1 In view of extension of hazardous areas due to emergency conditions, requirements of Ch 2, Sec 15, [3] are to be considered.

3 Recognised codes

3.1

3.1.1 In addition to the general provisions of this Section, the Society may refer to the following recognised codes and standards:
- API RP 505 “Recommended Practice for Classification of Locations for Electrical Installations at Petroleum Facilities”
- EI Code of safe practice, Part 15 “Area Classification Code for installations handling flammable fluids”
- IEC 60079-10 “Electrical apparatus for explosive gas atmospheres - Part 10: Classification of hazardous areas”
- IEC 60092-502 “Electrical installations in ships - Part 502: Tankers - Special features”
- IEC 61892-7 “Mobile and fixed offshore units - Electrical installations - Part 7: Hazardous area”
- IMO MODU Code.

4 Openings, access, ventilation, piping conditions affecting the extent of hazardous areas

4.1 Openings, access and ventilation

4.1.1 Except for operational reasons access doors or other openings are not to be provided between:
- a non-hazardous space and a hazardous area
- a Zone 2 space and a Zone 1 space.

Where such access doors or other openings are provided, any enclosed space not referred to in [2.1.3] or [2.1.4] or [2.1.3] item h) or [2.1.4] item i) and having a direct access to any Zone 1 location or Zone 2 location becomes the same zone as the location except that:

a) An enclosed space with direct access to any Zone 1 location can be considered as Zone 2 if:
- the access is fitted with a self-closing gas-tight door opening into the Zone 2 space, and
- ventilation is such that the air flow with the door open is from the Zone 2 space into the Zone 1 location, and
- loss of ventilation is alarmed at a manned control station.

b) An enclosed space with direct access to any Zone 2 location is not considered hazardous if:
- the access is fitted with a self-closing gas-tight door that opens into the non-hazardous location, and
- ventilation is such that the air flow with the door open is from the non-hazardous space into the Zone 2 location, and
- loss of ventilation is alarmed at a manned control station.

c) An enclosed space with direct access to any Zone 1 location is not considered hazardous if:
- the access is fitted with gas-tight self-closing doors forming an air lock, and
- the space has ventilation overpressure in relation to the hazardous space, and
- loss of ventilation overpressure is alarmed at a manned control station.

Where ventilation arrangements of the intended safe space are considered sufficient by the Society to prevent any ingress of gas from the Zone 1 location, the two self-closing doors forming an air lock may be replaced by a single self-closing gas-tight door which opens into the non-hazardous location and has no hold-back device.

d) Enclosed spaces giving access to paint stores may be considered as non-hazardous, provided that:
- the door to the paint store is a gastight door with self-closing devices without holding-back arrangements. A watertight door may be considered as being gastight
- the paint store is provided with an acceptable, independent, natural ventilation system ventilated from a safe area, and
- warning notices are fitted adjacent to the paint store entrance stating that the store contains flammable liquids.

e) Notices warning that the doors are to be kept closed are to be fitted whenever any of the above arrangement were adopted.

4.1.2 Hold back devices are not to be used on self-closing gastight doors forming hazardous areas boundaries.

4.2 Pipings

4.2.1 Piping systems are to be designed to preclude direct communication between hazardous areas of different classifications and between hazardous and non-hazardous areas.

5 Ventilation

5.1 General

5.1.1 Attention is to be given to ventilation inlet and outlet location and airflow in order to minimize the possibility of cross contamination. Inlets are to be located in non-hazardous areas as high and as far away from any hazardous area as practicable. Ventilation systems for hazardous areas are to be completely separate from those used for non-hazardous areas.

5.1.2 Hazardous enclosed spaces are to be ventilated to reduce the accumulation of explosive gas. Where possible, it shall eliminate the hazardous area or lessen the area classification, (for example from Zone 0 where an explosive atmosphere is present continuously or for long period, to Zone 1 where it is likely to occur in normal operation). Where mechanical ventilation is applied it is to be such that the hazardous enclosed spaces are maintained with underpressure in relation to the less hazardous spaces or areas and non-hazardous enclosed spaces are maintained in overpressure in relation to adjacent hazardous locations (at a minimum of 0,25 mbar).

5.2 Air inlets and discharges

5.2.1 The arrangement of ventilation inlet and outlet openings in the space is to be such that the entire space is efficiently ventilated, giving special consideration to location of equipment which may release gas, and to spaces where gas may accumulate.

5.2.2 The air inlets for the ventilation systems are to be located in a designated safe area and at least 3 m from any hazardous area.

Where the inlet duct passes through an hazardous area the inlet duct is to have overpressure in relation to this area.

5.2.3 Air intakes and openings into the accommodation spaces and all service and control station spaces are to be fitted with closing devices. For toxic gases, these devices are to be operable from inside the space.

5.2.4 The air inlets and discharges of the ventilation systems are to be situated so that recirculation of the vented vapours does not occur.

In particular, the discharges from ventilation systems which may contain hazardous vapours are to be located not less than 8 m from the nearest air intake or opening to accommodation, service and control station spaces or other safe spaces, and from all possible sources of ignition.

5.2.5 Each air outlet from hazardous spaces is to be located in an outdoor area which in the absence of the considered outlet is of the same or lesser hazard than the ventilated space.

5.2.6 The discharges from ventilation systems which may contain vapours that present a hazard due to reaction with each other are to be effectively segregated.

5.2.7 The outlet air from Zone 1 and Zone 2 spaces is to be led in separate ducts to outdoor locations. The internal spaces of such ducts belong to the same Zone as the inlet space. Air inlet ducts designed for constant relative underpressures are to be rigidly constructed to avoid air leaks. Non sparking fans are to be used.

Hazardous enclosed mud processing spaces are to be ventilated at a minimum rate of 12 air changes per hour.

5.2.8 Where the ventilation duct passes through a hazardous area of a higher level, the ventilation duct is to have overpressure in relation to this area; where the ventilation duct passes through a hazardous area of a lower level, the ventilation duct is to have underpressure in relation to this area.

5.3 Capacity of ventilation system to hazardous area spaces

5.3.1 Ventilation is regarded as adequate if it is sufficient to prevent accumulation of flammable gas.

5.3.2 The capacity of the ventilation systems is normally to be so that it allows not less than:

- 12 air changes per hour for enclosed spaces without stagnant areas, in particular those associated with hydrocarbon production and the mud processing areas.
- 8 air changes per hour for other enclosed spaces.

5.4 Open and semi-enclosed areas

5.4.1 Open and semi-enclosed areas without solid floor nor ceiling may be considered as adequately ventilated.

5.4.2 Open areas with natural ventilation are to have a sufficient air flow-through.

5.4.3 Sheltered or obstructed open areas with natural ventilation are to be provided with sufficient openings in decks, bulkheads or ceilings.

5.5 Gas safe compartments

5.5.1 Gas safe rooms or spaces located within an exterior hazardous atmosphere, including control rooms, are to be protected with an overpressure ventilation (maintaining an overpressure of 0,25 mbar minimum).

In particular, where it is impracticable to locate a plant service space or control station so that any access thereto is from a safe space, the service space or control station is to be maintained at an overpressure above the surrounding spaces. Details of the arrangements to ensure that this pressure differential is maintained are to be submitted.

5.6 Ventilation material and equipment

5.6.1 The number and capacity of fans are to be such that the minimum ventilation capacity required in each compartment is maintained at all times, with one unit out of service. If internal combustion engines are proposed, their fuel supply is to be kept separate from any other system. Electric motors are to be supplied by two alternative circuits each of which is capable of supplying all the motors which are normally connected to that circuit and which are operated simultaneously.

5.6.2 The ventilation system is to be capable of being controlled from a position outside the compartment being ventilated.

5.6.3 Each fan situated in an hazardous area is to be non-sparking.

5.7 Ventilation and operation of rooms or buildings protected by pressurization

5.7.1 Electrical apparatus liable to cause an ignition, may be used in a room or building located in a hazardous area, provided the ingress of the explosive atmosphere is prevented by maintaining inside it a protective gas at a higher pressure than that of the outside atmosphere.

5.7.2 During initial start-up or after shutdown, and whatever the classification of the hazardous area, it is necessary, before energizing any electrical apparatus in the room which is not suitably protected for the classification of the area to:

a) either ensure that the internal atmosphere is not hazardous (see Note 1), or proceed with prior purging of sufficient duration that the internal atmosphere may be considered as non-hazardous (see Note 2)

b) pressurize the room.

Note 1: An atmosphere is considered non-hazardous when, at all points in the room, the enclosures and associated ducts, the concentration of explosive gases or vapours is below 25% of the lower explosive limit. The place of measurement should be judiciously chosen to determine the highest concentration of gas.

Note 2: Generally, the volume of protective gas required for purging is estimated as at least 5 times the internal volume of the room and its associated ducts.

5.7.3 Fixed gas detectors are to be installed at the ventilation air intake; in the event of gas detection at 25% of LEL, visible and audible alarms are to be actuated in a location where they will immediately be perceived by the responsible personnel.

Note 1: Gas detectors which are not intrinsically safe are to be certified for the groups of gases they are operating in.

5.7.4 In the event of detection of an explosive gas concentration at 60% LEL, an automatic shut-down of process and apparatus which is not certified gas safe type, is to be initiated.

Note 1: It may well necessary, to avoid false indications and possible inadvertent shut-down, to apply a coincidence voting arrangement where monitoring is carried out employing 3 detectors, in which operation of any detector at low level will sound alarm and where coincidence operation of 2 out of 3 at high level will activate the shut-down.

5.8 Value of overpressure and of protective gas flow

5.8.1 The pressurization system as required in [5.6] and [5.7] are to be capable of ensuring a sufficient outward protective gas speed through the openings of the room when all these openings are open at the same time. The velocity is to be greater than of external air currents but shall not lead to so great a pressure in the room as to make it difficult to open and close the doors.

Note 1: When doors, windows and openings are provided with airlocks, these should be closed when checking this requirement.

5.8.2 A minimum overpressure of 25 Pa (0,25 mbar) with respect to the outer atmosphere is to be maintained at all points inside the room and its associated ducts at which leaks are liable to occurs, all doors and windows being closed.

Note 1: This overpressure value is to prevent the ingress of the external atmosphere for wind speed up to approximately 3,5 m/s.

5.8.3 If there is any air consuming apparatus inside the pressurized room, the flow through the pressurization system is to be capable of covering all needs; if not the extra air required is to be supplied by a separate system.

Note 1: The pressurization system may also include heating, ventilation and air-conditioning devices over and above the apparatus necessary to comply with the above requirements.

Note 2: The design of a pressurized room also needs to consider:

- the number of persons expected to stay in the room in order to ensure the necessary renewal of the air, and
- the type of apparatus to be installed in the room and their need for cooling air if any.

5.9 Failure of the pressurization

5.9.1 For monitoring the satisfactory functioning of the pressurization, either a pressure monitoring device or a flow monitoring device or both are to be used.

Note 1: Electrical interlock on the fan motors is not suitable to indicate failure of the pressurization. They do not give an indication in the event of, for example, the fan belt slipping, the fan becoming loose on the shaft or reserve rotation of the fan.

Note 2: Pressure monitoring devices should be certified for the group of gases they might be operating in.

5.9.2 Following loss of pressurization, visible and audible alarms are to be actuated; they are to be located where they will immediately alert the responsible personnel who will take the necessary action (see Tab 1).

Table 1 : Summary of protective measures to be taken in the event of failure of pressurization

Classification of the interior of the room**(1)**	Electrical apparatus installed		
	Apparatus suitable for Zone 1	Apparatus suitable for use in Zone 2	Apparatus not protected for any hazardous area
Zone 1	No action is required	Suitable alarm (visible or audible or both) Immediate action to restore pressurization Programmed disconnection of power supplies if the pressurization cannot be restored for an extended period or if the concentration of flammable gas is rising to a dangerous level	Suitable alarm (visible or audible or both) Immediate action to restore pressurization Automatic interruption of the power supplies as rapidly as practicable within a prescribed delay time having regard to the needs of a programmed shut-down
Zone 2	No action is required	No action is required	Suitable alarm (visible or audible or both) Immediate action to restore pressurization Programmed disconnection of power supplies if the pressurization cannot be restored for an extended period or if the concentration of flammable gas is rising to a dangerous level
(1) Classification in the event of absence of pressurization.			

6 Machinery installation in hazardous areas

6.1 General

6.1.1 Mechanical equipment is to be limited to that necessary for operational purposes.

6.1.2 Mechanical equipment and machinery in hazardous areas are to be so constructed and installed as to reduce the risk of ignition form sparking due to the formation of static electricity or friction between moving parts and from high temperatures of exposed parts due to exhausts or other emissions.

6.1.3 The installation of internal combustion machinery may be permitted in zone 2 hazardous areas, provided the requirements of Ch 1, Sec 2, [5] are complied with.

6.1.4 Fired boilers are not to be installed in hazardous areas.

The installation of fired equipment may however be permitted in zone 2 hazardous areas provided that the Society is satisfied that sufficient precaution has been taken against the risk of dangerous ignition.

6.2 Compressors and pumps

6.2.1 In general, air compressors are not to be installed in hazardous areas. Where this is not practicable, alternative arrangements may be accepted, provided that the air inlets are trunked or ducted from a safe space and that such trunking/ducting is fitted with gas detectors arranged to give audible and visual alarms and to shut down the compressor in the event of flammable and/or toxic gas or vapour entering the air inlets.

6.2.2 Gas detectors

The gas detectors provided in application of [6.2.1] are to be capable of continuously sampling the air supply and are to be so arranged as to prevent cross-communication between hazardous and safe spaces.

6.2.3 Relief valves

Pumps for hydrocarbon oil/gas systems are to be provided with relief valves in close circuit. Alternate arrangements may be considered; details are to be submitted. The vent line from relief valves is to be self-draining.

6.2.4 Emergency stop

Pumps and compressors are to be fitted with remote emergency stop facilities.

Section 4 Structural Fire Protection

1 General requirements

1.1 General

1.1.1 Requirements of the present Article are principally formulated for units having their hull superstructures, structural bulkheads, decks and deckhouses constructed of steel.

1.1.2 Units constructed of other materials may be accepted, provided that, in the opinion of the Society, they provide an equivalent standard of safety.

1.1.3 The requirements of this Section do not apply to hazardous areas as defined in Ch 4, Sec 1, [3.2.4].

1.1.4 Structural fire protection details, materials and methods of construction should be in accordance with FTP Code, as applicable and SOLAS Convention as applied for cargo ships.

1.2 Fire integrity of bulkheads and decks

1.2.1 In addition to comply with the specific provisions for fire integrity of bulkheads and decks in the present Sub-article and in [4.1], the minimum fire integrity of bulkheads and decks is to be as prescribed in Tab 1 and Tab 2.

External boundaries of superstructures and deckhouses enclosing accommodation, including any overhanging decks which support such accommodation, are to be constructed at least to "A-60" standard for the whole of the portion which faces the process, the storage area or the drilling area and is within 30 m of the centre of the rotary table, if any. For units which have a movable substructure the 30 m are to be measured with the substructure at its closest drilling position to accommodation.

When facing a process or storage area, the "A-60" insulation is to extend on the outward side for a distance of at least 3 m, and as high as deemed necessary by the Society.

The Society may accept equivalent arrangements for existing units.

1.2.2 The following requirements govern application of the Tables:

a) Tab 1 and Tab 2 are applicable respectively to the bulkheads and decks separating adjacent spaces.

b) For determining the appropriate fire integrity standards to be applied to divisions between adjacent spaces, such spaces are classified according to their fire risk as shown in categories (1) to (11) below. Where the contents and use of a space are such that there is a doubt as to its classification for the purpose of the present Section, or where it is possible to assign two or more classifications to a space, it is to be treated as a space within the relevant category having the most stringent boundary requirements. Smaller, enclosed areas within a space that have less than 30 % communicating openings to that space are considered separate areas. The fire integrity of the boundary bulkheads and decks of such smaller spaces are to be as prescribed in Tab 1 and Tab 2.

The number between parentheses preceding each category refers to the applicable column or row in the Tables:

(1) : Control stations are spaces as defined in Ch 4, Sec 1, [3.4] and storage rooms of fire-extinguishing medium referred to in Ch 4, Sec 6, [4.3.1]

(2) : Corridors means corridors and lobbies

(3) : Accommodation spaces are spaces as defined in Ch 4, Sec 1, [3.5.1], excluding corridors, lavatories and pantries containing no cooking appliances

(4) : Stairways are interior stairways, lifts and escalators (other than those wholly contained within the machinery spaces) and enclosures thereto.

In this connection a stairway which is enclosed only at one level should be regarded as part of the space from which it is not separated by a fire door

(5) : Service spaces (low risk) are spaces as defined in Ch 4, Sec 1, [3.3.1]

(6) : Machinery spaces of category A are spaces as defined in Ch 4, Sec 1, [3.2.1]

(7) : Other machinery spaces are spaces defined in Ch 4, Sec 1, [3.2.2] other than machinery spaces of category A

(8) : Hazardous areas are areas as defined in Ch 4, Sec 1, [3.2.4]

(9) : Service spaces (high risk) are spaces as defined in Ch 4, Sec 1, [3.3.2]

(10) : Open decks are open deck spaces, excluding hazardous areas

(11) : Sanitary and similar spaces are communal sanitary facilities such as showers, baths, lavatories, etc., and isolated pantries containing no cooking appliances. Sanitary facilities which serve a space and with access only from that space are to be considered as a portion of the space in which they are located.

Table 1 : Fire integrity of bulkheads separating adjacent spaces

Spaces		(1)	(2)	(3)	(4)	(5)	(6)	(7)	(8)	(9)	(10)	(11)
Control stations	**(1)**	A-0 [d]	A-0	A-60	A-0	A-15	A-60	A-15	A-60 [e]	A-60	*	A-0
Corridors	**(2)**		C	B-0	B-0 A-0 [b]	B-0	A-60	A-0	A-0 [e]	A-0	*	B-0
Accommodation spaces	**(3)**			C	B-0 A-0 [b]	B-0	A-60	A-0	A-0 [e]	A-0	*	C
Stairways	**(4)**				B-0 A-0 [b]	B-0 A-0 [b]	A-60	A-0	A-0 [e]	A-0	*	B-0 A-0 [b]
Service spaces (low risk)	**(5)**					C	A-60	A-0	A-0	A-0	*	B-0
Machinery spaces of category A	**(6)**						* [a]	A-0 [a]	A-60	A-60	*	A-0
Other machinery spaces	**(7)**							A-0 [a] [c]	A-0	A-0	*	A-0
Hazardous areas	**(8)**									A-0	*	A-0
Service spaces (high risk)	**(9)**									A-0 [c]	*	A-0
Open decks	**(10)**											*
Sanitary and similar spaces	**(11)**											C

Note 1: For the meaning of [a], [b], [c], [d], [e] and *, refer to Tab 2.

Table 2 : Fire integrity of decks separating adjacent spaces

Space below		Space above										
		(1)	(2)	(3)	(4)	(5)	(6)	(7)	(8)	(9)	(10)	(11)
Control stations	**(1)**	A-0	A-0	A-0	A-0	A-0	A-60	A-0	A-0 [e]	A-0	*	A-0
Corridors	**(2)**	A-0	*	*	A-0	*	A-60	A-0	A-0 [e]	A-0	*	*
Accommodation spaces	**(3)**	A-60	A-0	*	A-0	*	A-60	A-0	A-0 [e]	A-0	*	*
Stairways	**(4)**	A-0	A-0	A-0	*	A-0	A-60	A-0	A-0 [e]	A-0	*	A-0
Service spaces (low risk)	**(5)**	A-15	A-0	A-0	A-0	*	A-60	A-0	A-0	A-0	*	A-0
Machinery spaces of category A	**(6)**	A-60	A-60	A-60	A-60	A-60	* [a]	A-60	A-60	A-60	*	A-0
Other machinery spaces	**(7)**	A-15	A-0	A-0	A-0	A-0	A-0 [a]	* [a]	A-0	A-0	*	A-0
Hazardous areas	**(8)**	A-60 [e]	A-0 [e]	A-0 [e]	A-0 [e]	A-0	A-60	A-0	–	A-0	–	A-0
Service spaces (high risk)	**(9)**	A-60	A-0	A-0	A-0	A-0	A-60	A-0	A-0	A-0 [c]	*	A-0
Open decks	**(10)**	*	*	*	*	*	*	*	–	*	–	*
Sanitary and similar spaces	**(11)**	A-0	A-0	*	A-0	*	A-0	A-0	A-0	A-0	*	*

Note 1:

[a] : Where the space contains an emergency power source or components of an emergency power source adjoining a space containing a unit's service generator or the components of a unit's service generator, the boundary bulkhead or deck between those spaces should be an “A-60” class division

[b] : For clarification as to which the Note applies, refer to [4.1.3] and [4.1.5]

[c] : Where spaces are of the same numerical category and superscript (c) appears, a bulkhead or deck of the rating shown in the tables is only required when the adjacent spaces are for a different purpose e.g. in category (9). A galley next to a galley does not require a bulkhead but a galley next to a paint room requires an “A-0” bulkhead

[d] : Bulkheads separating the central control room, chartroom and radio room from each other may be “B-0” rating

[e] : An engineering evaluation is to be conducted in accordance with [4.1.1]. In no case the bulkhead or deck rating is to be less than the value indicated in the tables.

* : Where an asterisk appears in the tables the division is required to be of steel or equivalent material but not required to be of “A” class standard. However, where a deck is penetrated for the passage of electric cables, pipes and vent ducts, such penetrations are to be made tight to prevent the passage of flame and smoke.

1.2.3 Continuous B class ceilings or linings in association with the relevant decks or bulkheads may be accepted as contributing wholly or in part to the required insulation and integrity of a division.

1.2.4 In designing fire protection details, due consideration is to be given to the risk of heat transmission at intersections and terminal points of required thermal barriers.

The insulation of a deck or bulkhead is to be carried past the penetration, intersection or terminal point for a distance of at least 450 mm in the case of steel and aluminium structures. If a space is divided with a deck or a bulkhead of A class standard having insulation of different values, the insulation with the higher value is to continue on the deck or bulkhead with the insulation of the lesser value for a distance of at least 450 mm.

2 Penetrations in fire-resisting divisions

2.1 Penetrations in A class divisions

2.1.1 Where A class divisions are penetrated, such penetration are to be tested in accordance with the Fire Test Procedures Code. In the case of ventilation ducts, requirements [5.1.2], [5.3.1] and [5.3.2] apply. However, where a pipe penetration is made of steel or equivalent material having a thickness of 3 mm or greater and a length of not less than 900 mm (preferably 450 mm on each side of the division), and there are no openings, testing is not required. Such penetrations are to be suitably insulated by extension of the insulation at the same level of the division.

2.2 Penetrations in B class divisions

2.2.1 Where B class divisions are penetrated for the passage of electric cables, pipes, trunks, ducts, etc., or for the fitting of ventilation terminals, lighting fixtures and similar devices, arrangements shall be made to ensure that the fire resistance is not impaired, subject to the provisions of [5.3.3]. Pipes other that steel or copper that penetrate B class divisions shall be protected by either:

- a fire-tested penetration device suitable for the fire resistance of the division pierced and the type of pipe used, or
- a steel sleeve, having a thickness of not less than 1,8 mm and a length of not less than 900 mm for pipe diameters of 150 mm or more and not less than 600 mm for pipe diameters of less than 150 mm (preferably equally divided to each side of the division). The pipe shall be connected to the ends of the sleeve by flanges or couplings; or the clearance between the sleeve and the pipe shall not exceed 2,5 mm; or any clearance between pipe and sleeve shall be made tight by means of non-combustible or other suitable material.

2.3 Pipes penetrating A or B class divisions

2.3.1 Uninsulated metallic pipes penetrating A or B class divisions shall be of materials having a melting temperature which exceeds 950°C for A-0 and 850°C for B-0 class divisions.

2.3.2 Where the Society may permit the conveying of oil and combustible liquids through accommodation and service spaces, the pipes conveying oil or combustible liquids are to be of a material approved by the Society having regard to the fire risk.

3 Protection of openings in fire-resisting divisions

3.1 Doors in fire-resisting divisions

3.1.1 The fire resistance of doors is to be equivalent to that of the division in which they are fitted, this being determined in accordance with the Fire Test Procedures Code. Doors and door frames in A class divisions are to be constructed of steel. Doors in B class divisions are to be non-combustible. External doors in superstructures and deckhouses should be constructed to at least A-0 class standard and be self-closing, where practicable. Doors fitted in boundary bulkheads of machinery spaces of category A are to be reasonably gas-tight and self-closing. However, if the machinery space is not protected by a fixed gas fire-extinguishing system, the doors needs not to be gas-tight.

Note 1: Where a door is fitted in an A class bulkhead which is also required to be watertight by the present Rules, this steel door need not to be fire tested nor insulated.

3.1.2 Self-closing doors in fire rated bulkheads are to not be fitted with hold-back hooks. However, hold-back arrangements fitted with remote release devices of the fail-safe type capable of being operated from a control station may be accepted.

3.1.3 In corridor bulkheads, ventilation openings may be permitted in and under the doors of cabins, public spaces, offices and sanitary spaces. The openings should be provided only in the lower half of the door. Where such an opening is in or under a door, the total net area of any such opening or openings is not to exceed 0,05 m^2. Where such an opening is in cut in a door it should be fitted with a grille made of non-combustible material. Such openings are not to be provided in a door in a division forming a stairway enclosure.

Note 1: Alternatively, a non-combustible air balance duct routed between the cabin and the corridor, and located below the sanitary unit, is permitted where the cross-sectional area of the duct does not exceed 0,05 m^2.

Note 2: Except as permitted above, balancing openings or ducts between two enclosed spaces are prohibited.

3.2 Windows and sidescuttles

3.2.1 For units other than drilling units, the party applying for classification is to specify, in order to enter this information in the Design Criteria Statement, windows and sidescuttles which may face the drilling floor and/or be included in hazardous areas due to the drilling unit or fixed platform for which the unit performs services and, if any, communicate all necessary information about the extent of these zones.

3.2.2 Windows and sidescuttles, with the exception of central control room windows, should be of the non-opening type. Navigating bridge windows may be of the opening type provided the design of such windows permits rapid closure. The Society may permit windows and sidescuttles outside hazardous areas to be of the opening type.

3.2.3 Windows and sidescuttles in boundaries which are required to meet an A-60 standard and which face the drill floor area of the unit, or of the unit or fixed platform for which the unit performs services, are to be:

- either constructed to an A-60 standard, or
- protected by a water-curtain, or
- fitted with shutters of steel or equivalent material.

3.3 Openings and access in machinery and working spaces

3.3.1 The number of skylights, doors, ventilators and openings in funnels to allow exhaust ventilation and other openings to machinery spaces is to be reduced to a minimum consistent with the needs of ventilation and the proper and safe operation of the unit.

3.3.2 Skylights are to be made of steel and are to include no glass panels. Suitable arrangements are to be made to allow the release of smoke in the event of a fire in the space to be protected.

3.3.3 Means of control are to be provided for closing power-operated doors or actuating release mechanisms on doors other than power-operated watertight doors. The controls are to be located outside the space concerned, where they will not be cut off in the event of fire in the space it serves.

3.3.4 Windows are not to be fitted in machinery space boundaries. However, this does not preclude the use of glass in control rooms within the machinery spaces.

4 Protection of accommodation spaces, service spaces and control stations

4.1

4.1.1 In general, accommodation spaces, service spaces and control stations are not to be located adjacent to hazardous areas. However, where this is not practicable, an engineering evaluation is to be performed to ensure that the level of fire protection and blast resistance of the bulkheads and decks separating these spaces from the hazardous areas are adequate for the likely hazard.

4.1.2 All bulkheads required to be A class divisions are to extend from deck to deck and to the deckhouse side or other boundaries.

4.1.3 All bulkheads required to be B class divisions are to extend from deck to deck and to the deckhouse side or other boundaries, unless continuous B class ceilings and/or linings are fitted on both sides of the bulkhead, in which case the bulkhead may terminate at the continuous ceiling or lining.

4.1.4 Stairs are to be constructed of steel or other equivalent material.

4.1.5 Stairways which penetrate only a single deck are to be protected at least at one level by A or B class divisions and self-closing doors so as to limit the rapid spread of fire from one deck to another. Personnel lift trunks are to be protected by A class divisions. Stairways and lift trunks which penetrate more than a single deck are to be surrounded by A class divisions and protected by self-closing doors at all levels.

4.1.6 Air spaces enclosed behind ceilings, panellings or linings are to be divided by close fitting draught stops spaced not more than 14 metres apart. In the vertical direction, such enclosed air spaces, including those behind linings of stairways, trunks, etc., are to be closed at each deck.

4.1.7 Except for insulation in refrigerated compartments, insulation material, pipe and vent duct lagging, ceilings, linings and bulkheads are to be of non-combustible material. Insulation of pipe fittings for cold service systems and vapour barriers and adhesives used in conjunction with insulation need not be non-combustible, but they are to be kept to a minimum and their exposed surfaces are to have low flame spread characteristics. In spaces where penetration of oil products is possible, the surfaces of the insulation are to be impervious to oil or oil vapours.

4.1.8 The framing, including grounds and the joint pieces of bulkheads, linings, ceilings and draught stops is to be of non-combustible material.

4.1.9 All exposed surfaces in corridors and stairway enclosures and surfaces in concealed or inaccessible spaces in accommodation and service spaces and control stations are to have low flame-spread characteristics. Exposed surfaces of ceilings in accommodation and service spaces and control stations are to have low flame-spread characteristics.

4.1.10 Bulkheads, linings and ceilings may have combustible veneers provided that the thickness of such veneers is not to exceed 2,5 mm within any space other than corridors, stairway enclosures and control stations where the thickness is not to exceed 1,5 mm. Combustible materials used on these surfaces are to have a calorific value not exceeding 45 MJ/m² of the area for the thickness used.

Note 1: For the calorific value, reference is made to ISO 1716 "Reaction to fire tests for building products - Determination of the heat of combustion", as amended.

4.1.11 Primary deck coverings, if applied within accommodation and service spaces and control stations, are to be of type approved materials which do not readily ignite and materials which do not give rise to smoke or toxic or explosive hazards at elevated temperature, this being determined in accordance with FTP Code.

4.1.12 Paints, varnishes and other finishes used on exposed interior surfaces are not to offer an undue fire hazard in the judgement of the Society, and are not to be capable of producing excessive quantities of smoke or toxic products. They are to be type approved in accordance with FTP Code.

5 Ventilation systems

5.1 Ducts and dampers

5.1.1 Ventilation ducts are to be of non-combustible material. However, short ducts, not generally exceeding 2 m in length and with a free cross-sectional area not exceeding 0,02 m², need not be non-combustible, subject to the following conditions:

a) the ducts are made of a material which has low flame-spread characteristics

b) the ducts are only used at the end of the ventilation device, and

c) the ducts are not situated less than 600 mm, measured along the duct, from an opening in an A or B class division, including continuous B class ceiling.

Flexible bellows of combustible material may be used for connecting fans to the ducting in the air-conditioning room.

Combustible gaskets in flanged ventilation duct connections are not permitted within 600 mm of an opening in an A or B class division and in ducts required to be of A class construction.

Note 1: The term free cross-sectional area means, even in the case of a pre-insulated duct, the area calculated on the basis of the inner diameter of the duct.

5.1.2 The following arrangements are to be tested in accordance with the Fire Test Procedures Code.

a) fire dampers, including their relevant means of operation, and

b) duct penetrations through A class divisions. However, the test is not required where steel sleeves are directly joined to ventilation ducts by means of riveted or screwed flanges or by welding.

5.2 Arrangement of ducts

5.2.1 The ventilation system for machinery spaces of category A, galleys and hazardous areas are to be, in general, separated from each other and from the ventilation systems serving other spaces, except that the galley ventilation systems on units of less than 4000 gross tonnage need not be completely separated, but may be served by separate ducts from a ventilation unit serving other spaces. In any case, an automatic fire damper is to be fitted in the galley ventilation duct near the ventilation unit. Ducts provided for ventilation of machinery spaces of category A, galleys and hazardous areas are not to pass through accommodation and service spaces or control stations. However, the Society may permit relaxation from the present requirement, except for the ducts serving hazardous areas passing through accommodation spaces, control stations and galleys, provided that the ducts are:

a) Constructed of steel having a thickness of at least 3 mm for ducts of 300 mm in width or less and of at least 5 mm for ducts of 760 mm in width and over; in the case of ducts the width or diameter of which is between 300 mm and 760 mm, the thickness is to be obtained by interpolation.

b) Suitably supported and stiffened.

c) Fitted with automatic fire dampers close to the boundary penetrated.

d) Insulated to A-60 standard from the machinery spaces or galleys to a point at least 5 m beyond each fire damper.

e) Constructed of steel in accordance with a).

f) Insulated to A-60 standard throughout accommodation spaces, service spaces or control stations.

5.2.2 Ducts provided for the ventilation of accommodation spaces, service spaces or control stations are not to pass through machinery spaces of category A, galleys or hazardous areas. However, the Society may permit relaxation from the present requirement, except for the ducts passing through hazardous areas, provided that:

a) the ducts where they pass through a machinery space of category A or a galley are constructed of steel in accordance with [5.2.1] item a)

b) automatic fire dampers are fitted close to the boundaries penetrated

c) the integrity of the machinery space or galley boundaries is maintained at the penetrations

d) the ducts where they pass through a machinery space of category A or a galley are constructed of steel in accordance with [5.2.1] item a)

e) are insulated to A-60 standard within the machinery space or galley.

5.3 Details of duct penetrations

5.3.1 Where a thin plated duct with a free cross-sectional area equal to, or less than, 0,02 m² passes through A class bulkheads or decks, the opening is to be lined with a steel sheet sleeve having a thickness of at least 3 mm and a length of at least 200 mm, divided preferably into 100 mm on each side of the bulkhead or, in the case of the deck, wholly laid on the lower side of the deck pierced.

5.3.2 Where ventilation ducts with a cross-sectional area exceeding 0,02 m² pass through A class bulkheads or decks, the opening is to be lined with a steel sheet sleeve unless the ducts passing though the bulkheads or decks are of steel in the vicinity of penetrations through the deck or bulkhead; the ducts and sleeves at such places are to comply with the following:

a) The ducts or sleeves are to have a thickness of at least 3 mm and a length of at least 900 mm. When passing through bulkheads, this length is to be divided preferably into 450 mm on each side of the bulkhead. These ducts, or sleeve lining such ducts, are to be provided with fire insulation. The insulation is to have at least the same fire integrity as the bulkhead or deck through which the duct passes. Equivalent penetration protection may be provided to the satisfaction of the Society.

b) Ducts with a cross-sectional area exceeding 0,075 m², except those serving hazardous areas, are to be fitted with fire dampers in addition to meeting the requirements of item a) above.

   The fire dampers are to operate automatically but are also to be capable of being closed manually from both sides of the bulkhead or deck. The dampers are to be provided with indicators showing whether they are open or closed.

   Fire dampers are not required, however, where ducts pass through spaces surrounded by A class divisions, without serving those spaces, provided those ducts have the same fire integrity as the divisions which they pierce. The Society may, given special considerations, permit operation from one side of a division only.

5.3.3 Ventilation ducts with a cross-sectional area exceeding 0,02 m² passing through B class bulkheads are to be lined with steel sheet sleeves of 900 mm in length divided preferably into 450 mm on each side of the bulkhead unless the duct is of steel for this length.

5.4 Exhausts ducts from galley range

5.4.1 Where they pass through accommodation spaces or spaces containing combustible materials, the exhaust ducts from galley ranges are to be of equivalent fire integrity to A class divisions. Each such exhaust duct is to be fitted with:

- a grease trap readily removable for cleaning
- a fire damper located in the galley end of the duct which is automatically and remotely operated and, in addition a remotely operated fire damper located in the exhaust end of the duct
- arrangements, operable from within the galley, for shutting off the exhaust fans
- fixed means for extinguishing a fire within the duct.

5.5 Control of fire growth

5.5.1 The main inlets and outlets of all ventilation systems are to be capable of being closed from outside the spaces being ventilated.

5.5.2 Power ventilation of accommodation spaces, service spaces, control stations, machinery spaces and hazardous areas are to be capable of being stopped from an easily accessible position outside the space being served. The accessibility of this position in the event of a fire in the spaces served is to be specially considered. The means provided for stopping the power ventilation of the machinery spaces are to be entirely separate from the means provided for stopping ventilation of other spaces.

These requirements do not apply to closed recirculating systems within a single space.

5.5.3 The ventilation of the accommodation spaces and control stations is to be arranged in such a way as to prevent the ingress of flammable, toxic or noxious gases, or smoke from surrounding areas.

5.5.4 Means should be provided for stopping ventilating fans serving machinery and working spaces and for closing all doorways, ventilators, annular spaces around funnels and other openings to such spaces. These means should be capable of being operated from outside such spaces in case of fire.

5.5.5 Combustion air fans and compressors such as machinery driving forced and induced draught fans or electric motor pressurization fans and fuel pumps such as oil fuel transfer pumps or oil fuel unit pumps should be fitted with remote controls situated outside the space concerned so that they may be stopped in the event of a fire arising in the space in which they are located.

Section 5 Detection, Controls, Communications and Alarms

1 Alarms

1.1 General alarms

1.1.1 General alarms are to be provided in accordance with Ch 2, Sec 14, [2].

1.2 Ventilation alarms

1.2.1 Ventilation alarms are to be provided in accordance with Ch 4, Sec 3, [4.1] on units and installations where hazardous areas are present.

1.3 Mud systems level alarms

1.3.1 For mobile offshore drilling units, a suitable audible and visual alarm to indicate significant increase or decrease in the level of the contents of the mud pit is to be provided at the control station for drilling operations and at the mud pit. Equivalent means to indicate possible abnormal conditions in the drilling system may be considered by the Society.

2 Detection systems general design

2.1 General

2.1.1 Failure in an alarm detection panel and detector circuit is to activate failure alarm. The automatic alarm system is to be operational even during periods of main switchboard blackout.

2.1.2 Detection and alarm systems are to be designed in such a way they allow a satisfactory function testing without interrupting the operation of the unit.

2.1.3 The detection circuits are to be routed and protected so as to minimise the risks of failure.

3 Fixed fire detection and fire alarm systems

3.1 Definition

3.1.1 Section means a group of fire detectors and manually operated call points as reported in the indicating unit(s).

3.1.2 Section identification capability means a system with the capability of identifying the section in which a detector or manually operated call point has activated.

3.1.3 Individually identifiable means a system with the capability to identify the exact location and type of detector or manually activated call point which has activated, and which can differentiate the signal of that device from all others.

3.2 General

3.2.1 In principle, spaces having a fire risk should be provided with an automatic fire detection and alarm system.

3.2.2 In selecting the type of detectors, their following features should be taken into account:

a) capability to detect fire at the incipient stage

b) ability to avoid spurious alarm and trips; and

c) suitability to the located environment.

3.2.3 The fire detection main indicator board is to be at a manned control station and is to clearly indicate where fire has been detected.

3.2.4 Machinery spaces

Fixed fire detection and alarm systems are to be fitted in:

a) periodically unattended machinery spaces

b) machinery spaces where:
   - the installation of automatic and remote control system and equipment has been approved in lieu of continuous manning of the spaces, and
   - the main propulsion and associated machinery, including the main sources of electrical power, are provided with various degrees of automatic or remote control and are under continuous manned supervision from a control room and,

c) enclosed spaces containing incinerators.

Detection systems using only thermal detectors, in general, are not to be permitted.

Note 1: When additional classification notation **AUTO** is granted, the provisions of Ch 3, Sec 7 are to be complied with.

3.2.5 Accommodation and service spaces

An automatic fire detection and alarm system is to be provided in all accommodation and service spaces.

Accommodation space is to be fitted with smoke detectors.

Thermal detectors are to be fitted in galleys.

3.2.6 Electrical rooms and control stations

Smoke detectors are to be provided in all electrical rooms and control stations.

3.2.7 Drilling and mud processing areas

Flame or thermal detectors are to be installed in open drilling and/or mud processing areas.

Smoke detectors may be used in enclosed mud processing areas.

3.2.8 Manually operated alarm system

Sufficient manual fire alarm stations are to be installed throughout the accommodation spaces, service spaces and control stations. One manually operated call point is to be located at each exit. Manually operated call points are to be readily accessible in the corridors of each deck such that no part of the corridor is more than 20 m from a manually operated call point.

Measures are to be taken to prevent inadvertent operation of the manual call alarm system.

3.3 Engineering specifications

3.3.1 General requirements

a) Any required fixed fire detection and fire alarm system with manually operated call points shall be capable of immediate operation at all times (this does not require a backup control panel). Notwithstanding this, particular spaces may be disconnected, for example, workshops during hot work. The means for disconnecting the detectors shall be designed to automatically restore the system to normal surveillance after a predetermined time that is appropriate for the operation in question. The space shall be manned or provided with a fire patrol when detectors required by regulation are disconnected. Detectors in all other spaces shall remain operational.

b) The fire detection system shall be designed to:
   1) control and monitor input signals from all connected fire and smoke detectors and manual call points
   2) provide output signals to the navigation bridge, continuously manned central control station or onboard safety centre to notify the crew of fire and fault conditions
   3) monitor power supplies and circuits necessary for the operation of the system for loss of power and fault conditions; and
   4) the system may be arranged with output signals to other fire safety systems including:
      - paging systems, fire alarm or public address systems
      - fan stops
      - fire doors
      - fire dampers
      - sprinkler systems
      - smoke extraction systems
      - low-location lighting systems
      - fixed local application fire-extinguishing systems
      - closed circuit television (CCTV) systems, and
      - other fire safety systems.

Note 1: The ventilation fans and the fire dampers serving a machinery room equipped with internal combustion engines taking their combustion air directly inside the room are not to be automatically stopped or closed in case of fire detection, in order to prevent depressurization of the room

c) The fire detection system may be connected to a decision management system provided that:
   1) the decision management system is proven to be compatible with the fire detection system;
   2) the decision management system can be disconnected without losing any of the functions required by this chapter for the fire detection system; and
   3) any malfunction of the interfaced and connected equipment should not propagate under any circumstance to the fire detection system.

d) Detectors and manual call points shall be connected to dedicated sections of the fire detection system. Other fire safety functions, such as alarm signals from the sprinkler valves, may be permitted if in separate sections.

e) The system and equipment shall be suitably designed to withstand supply voltage variation and transients, ambient temperature changes, vibration, humidity, shock, impact and corrosion normally encountered in units. All electrical and electronic equipment on the bridge or in the vicinity of the bridge shall be tested for electromagnetic compatibility, taking into account the recommendations developed by the Organization.

Note 2: Refer to general requirements for electromagnetic compatibility for electrical and electronic equipment (Resolution A.813(19).

f) Fixed fire detection and fire alarm systems with individually identifiable fire detectors shall be so arranged that:
   1) means are provided to ensure that any fault (e.g. power break, short circuit, earth, etc.) occurring in the section will not prevent the continued individual identification of the remainder of the connected detectors in the section;
   2) all arrangements are made to enable the initial configuration of the system to be restored in the event of failure (e.g. electrical, electronic, informatics, etc.);
   3) the first initiated fire alarm will not prevent any other detector from initiating further fire alarms; and
   4) no section will pass through a space twice. When this is not practical (e.g. for large public spaces), the part of the section which by necessity passes through the space for a second time shall be installed at the maximum possible distance from the other parts of the section.

g) The fixed fire detection and fire alarm system shall, as a minimum, have section identification capability.

3.3.2 Sources of power supply

a) There shall be not less than two sources of power supply for the electrical equipment used in the operation of the fixed fire detection and fire alarm system, one of which shall be an emergency source of power. The supply shall be provided by separate feeders reserved solely for that purpose. Such feeders shall run to an automatic change-over switch situated in, or adjacent to, the control panel for the fire detection system. The change-over switch shall be arranged such that a fault will not result in the loss of both power supplies. The main (respective emergency) feeder shall run from the main (respective emergency) switchboard to the change-over switch without passing through any other distributing switchboard.

b) The operation of the automatic changeover switch or a failure of one of the power supplies shall not result in loss of fire detection capability. Where a momentary loss of power would cause degradation of the system, a battery of adequate capacity shall be provided to ensure continuous operation during change-over.

c) There shall be sufficient power to permit the continued operation of the system with all detectors activated, but not more than 100 if the total exceeds this figure.

d) The emergency source of power specified in item a) above may be supplied by accumulator batteries or from the emergency switchboard. The power source shall be sufficient to maintain the operation of the fire detection and fire alarm system for the periods required under Ch 2, Sec 3 and at the end of that period shall be capable of operating all connected visual and audible fire alarm signals for a period of at least 30 min.

e) Where the system is supplied from accumulator batteries, they shall be located in or adjacent to the control panel for the fire detection system, or in another location suitable for use in an emergency. The rating of the battery charge unit shall be sufficient to maintain the normal output power supply to the fire detection system while recharging the batteries from a fully discharged condition.

3.3.3 Component requirements

a) Detectors
   1) Detectors shall be operated by heat, smoke or other products of combustion, flame, or any combination of these factors. Detectors operated by other factors indicative of incipient fires may be considered by the Society provided that they are no less sensitive than such detectors.
   2) Smoke detectors required in all stairways, corridors and escape routes within accommodation spaces shall be certified to operate before the smoke density exceeds 12,5% obscuration per metre, but not until the smoke density exceeds 2% obscuration per metre, when tested according to standards EN 54:2001 and IEC 60092-504. Alternative testing standards may be used as determined by the Society. Smoke detectors to be installed in other spaces shall operate within sensitivity limits to the satisfaction of the Society having regard to the avoidance of detector insensitivity or oversensitivity.
   3) Heat detectors shall be certified to operate before the temperature exceeds 78°C but not until the temperature exceeds 54°C, when the temperature is raised to those limits at a rate less than 1°C per minute, when tested according to standards EN 54:2001 and IEC 60092-504. Alternative testing standards may be used as determined by the Society. At higher rates of temperature rise, the heat detector shall operate within temperature limits to the satisfaction of the Society having regard to the avoidance of detector insensitivity or oversensitivity.

4) The operation temperature of heat detectors in drying rooms and similar spaces of a normal high ambient temperature may be up to 130°C, and up to 140°C in saunas.
5) Flame detectors shall be tested according to standards EN 54-10:2001 and IEC 60092-504. Alternative testing standards may be used as determined by the Society.
6) All detectors shall be of a type such that they can be tested for correct operation and restored to normal surveillance without the renewal of any component.
7) Detectors fitted in hazardous areas shall be tested and approved for such service.

b) Control panel

The control panel for the fire detection system shall be tested according to standards EN 54-2:1997, EN 54-4:1997 and IEC 60092-504:2001. Alternative standards may be used as determined by the Society.

c) Cables

Cables used in the electrical circuits shall be flame retardant according to standard IEC 60332-1.

3.3.4 Installation requirements

a) Sections

1) Detectors and manually operated call points are to be grouped into sections.
2) A section of fire detectors which covers a control station, a service space or an accommodation space shall not include a machinery space of category A. For fixed fire detection systems with remotely and individually identifiable fire detectors, a section covering fire detectors in accommodation, service spaces and control stations shall not include fire detectors in machinery spaces of category A.
3) Where the fixed fire detection and fire alarm system does not include means of remotely identifying each detector individually, no section covering more than one deck within accommodation spaces, service spaces and control stations shall normally be permitted except a section which covers an enclosed stairway. In order to avoid delay in identifying the source of fire, the number of enclosed spaces included in each section shall be limited as determined by the Society. If the detection system is fitted with remotely and individually identifiable fire detectors, the sections may cover several decks and serve any number of enclosed spaces.

b) Position of detectors

1) Detectors are to be located for optimum performance. Positions near beams and ventilation ducts, or other positions where patterns of air flow could adversely affect performance, and positions where impact or physical damage is likely, shall be avoided. Detectors shall be located on the overhead at a minimum distance of 0,5 m away from bulkheads, except in corridors, lockers and stairways.
2) The maximum spacing of detectors is to be in accordance with Tab 1. The Society may require or permit other spacing based upon test data which demonstrate the characteristics of the detectors.
3) Detectors in stairways shall be located at least at the top level of the stair and at every second level beneath.
4) When fire detectors are installed in freezers, drying rooms, saunas, parts of galleys used to heat food, laundries and other spaces where steam and fumes are produced, heat detectors may be used.
5) Where a fixed fire detection and fire alarm system is required by Article [3], spaces having little or no fire risk need not be fitted with detectors. Such spaces include void spaces with no storage of combustibles, private bathrooms, public toilets, fire-extinguishing medium storage rooms and cleaning gear lockers (in which flammable liquids are not stowed).

c) Arrangement of cables

1) Cables which form part of the system shall be so arranged as to avoid galleys, machinery spaces of category A and other enclosed spaces of high fire risk except where it is necessary to provide for fire detection or fire alarms in such spaces or to connect to the appropriate power supply.
2) A section with individually identifiable capability shall be arranged so that it cannot be damaged at more than one point by a fire.

Table 1 : Spacing of detectors

Type of detector	Maximum floor area per detector	Maximum distance apart between centres	Maximum distance away from bulkheads
Heat	37 m²	9 m	4,5 m
Smoke	74 m²	11 m	5,5 m

3.3.5 System control requirements

a) Visual and audible fire signals

1) The activation of any detector or manually operated call point shall initiate a visual and audible fire detection alarm signal at the control panel and indicating units. If the signals have not been acknowledged within 2 minutes, an audible fire alarm shall be automatically sounded throughout the crew accommodation and service spaces, control stations and machinery spaces of category A. This alarm sounder system need not be an integral part of the detection system.

The alarm sounder system utilized by the fixed fire detection and fire alarm system should be powered from no less than two sources of power, one of which should be an emergency source of power.

In offshore units for which a transitional source of emergency electrical power is required by Ch 2, Sec 3, [3.1.11], the alarm sounder system should also be powered from this power source.

2) The control panel shall be located on the navigation bridge or in the fire control station.

3) In units with a cargo control room, an additional indicating unit shall be located in the cargo control room. An indicating unit shall be located on the navigation bridge if the control panel is located in the fire control station. Indicating units shall, as a minimum, denote the section in which a detector has been activated or manually operated call point has been operated.

A space in which a cargo control console is installed, but does not serve as a dedicated cargo control room (e.g. ship's office, machinery control room), should be regarded as a cargo control room for the purposes of this requirement and therefore be provided with an additional indicating unit.

4) Clear information is to be displayed on or adjacent to each indicating unit about the spaces covered and the location of the sections.

5) Power supplies and electric circuits necessary for the operation of the system shall be monitored for loss of power and fault conditions, as appropriate, including:

- a single open or power break fault caused by a broken wire;
- a single ground fault caused by the contact of a wiring conductor to a metal component; and
- a single wire to wire fault caused by the contact of two or more wiring conductors.

Occurrence of a fault condition shall initiate a visual and audible fault signal at the control panel which shall be distinct from a fire signal.

6) Means to manually acknowledge all alarm and fault signals shall be provided at the control panel. The audible alarm sounders on the control panel and indicating units may be manually silenced. The control panel shall clearly distinguish between normal, alarm, acknowledged alarm, fault and silenced conditions.

7) The system shall be arranged to automatically reset to the normal operating condition after alarm and fault conditions are cleared.

8) When the system is required to sound a local audible alarm within the cabins where the detectors are located, a means to silence the local audible alarms from the control panel shall not be permitted.

9) In general, audible alarm sound pressure levels at the sleeping positions in the cabins and 1 m from the source shall be at least 75 dB(A) and at least 10 dB(A) above ambient noise levels existing during normal equipment operation with the unit under way in moderate weather. The sound pressure level should be in the 1/3 octave band about the fundamental frequency. Audible alarm signals shall not exceed 120 dB(A).

b) Testing

Suitable instructions and component spares for testing and maintenance shall be provided. Detectors shall be periodically tested using equipment suitable for the types of fires to which the detector is designed to respond. Detectors installed within cold spaces such as refrigerated compartments shall be tested using procedures having due regard for such locations. Units with self-diagnostic systems that have in place a cleaning regime for areas where heads may be prone to contamination may carry out testing in accordance with the requirements of the Society.

4 Gas detection system

4.1 Combustible gas detection and alarm system

4.1.1 General

A fixed automatic gas detection and alarm system is to be provided to the satisfaction of the Society, so arranged as to monitor continuously all enclosed areas of the unit in which an accumulation of flammable gas may be expected to occur. The system should be capable of indicating at the central control room by audible and visual means the presence and location of an accumulation of flammable gas.

4.1.2 Areas for protection

Fixed automatic combustible gas detection and alarm systems are to be provided for the following areas:

a) cellar deck

b) drill floor

c) ventilation intake of positive pressure driller's cabin

d) mud pit area

e) shale shaker area

f) enclosed spaces containing the open components of mud circulation system from the bell nipple to the mud pits

g) ventilation intakes of accommodation spaces

h) ventilation intakes of enclosed machinery spaces contiguous to hazardous areas and containing internal combustion engines, boilers, or non-explosion proof electrical equipment

i) air intakes to all combustion engines or machinery, including internal combustion engines, boilers, compressors or turbines, located outside of an enclosed machinery space

j) at each access door to accommodation spaces

k) near other openings, including emergency egress, of accommodation spaces, regardless if these openings are fitted with self-closing and gastight closing appliances.

4.1.3 Areas where protection is not required

Fixed automatic combustible gas detection and alarm systems are not required:

- Near access doors to accommodation spaces where these form part of an airlock which is provided with a gas detection and alarm system between the two doors of the airlock.
- Near emergency egress doors which are fitted with a mechanism to prevent use other than in an emergency (e.g. doors fitted with security seals acting as a deterrent but easily breakable in a real emergency.).
- Near other openings which are provided with closing appliances of non-opening type, e.g. bolted closed maintenance ways etc.

4.1.4 Alarms

The gas detectors are to be connected to an audible and visual alarm system with indicators on the drill floor and in the main control station. The alarm system is to clearly indicate the location and concentration of the gas hazard. The combustible gas detectors are to alarm at not more than 25% and at 60% of the lower explosive limit (LEL).

4.1.5 Power supply

The detection system, where electrically supplied, is to be fed automatically from an emergency source of power by a separate feeder if the main source of power fails.

4.1.6 Ventilation air intakes

Requirement of Ch 4, Sec 3, [5.7.3] and Ch 4, Sec 3, [5.7.4] are to be complied with.

4.2 Hydrogen sulphide detection and alarm system

4.2.1 General

When deemed necessary, a fixed automatic hydrogen sulphide gas detection and alarm system is to be provided to the satisfaction of the Society.

4.2.2 Areas for protection

For mobile offshore drilling units, a fixed automatic hydrogen sulphide gas detection and alarm system are to be provided for the following areas:

a) drill area

b) mud processing area

c) well test area.

4.2.3 Alarms

The detectors are to be connected to an audible and visual alarm system with indicators in the main control room. The system is to clearly indicate where gas has been detected. Low level alarm set at 10 ppm and high level alarm set not higher than 300 ppm are to be designed. The high level alarm is to activate an evacuation alarm. If the alarm at the main control point is unanswered within 2 min, the toxic gas (hydrogen sulphide) alarm and the helideck status light is to be automatically activated.

4.2.4 Power supply

The detection system, where electrically supplied, is to be fed automatically from an emergency source of power by a separate feeder if the main source of power fails.

4.3 Portable gas monitoring devices

4.3.1 On drilling units or installations, or units and installations where hydrocarbons are processed or stored, at least two portable flammable gas monitoring devices and two portable hydrogen sulphide gas monitoring devices are to be provided, each capable of an accurate measurement of gas concentration. In addition, at least two portable oxygen analysers are to be provided.

4.3.2 The gas detectors are to be of a type approved by the Society.

4.4 Respiratory protection equipment for hydrogen sulphide

4.4.1 Respiratory protection equipment for hydrogen sulphide are to be provided on board according to either of the following:

- a Self-Contained Breathing Apparatus (SCBA) positive-pressure/pressure-demand breathing equipment with full-face piece and rated for a minimum of 30 minutes is to be provided for each person in working areas where hydrogen sulphide may be encountered, and each person in other areas is to be provided with SCBA rated for a minimum of 15 minutes, or
- a positive-pressure/pressure-demand air line breathing equipment coupled with a SCBA equipped low pressure warning alarm and rated for a minimum of 15 minutes is to be provided for each person on board the unit.

Breathing air supply line stations are to be provided at least in the following areas:

- living quarters
- muster/evacuation area
- drilling areas
- mud processing areas
- other working areas.

Section 6 Suppression of Fire: Fire Fighting

1 Application

1.1

1.1.1 When a fixed fire fighting installation is provided in addition to those required by the present Chapter, such an installation is to be installed and arranged to the satisfaction of the Society.

2 Fire fighting water supply

2.1 General

2.1.1 Units are to be provided with fire pumps, fire mains, hydrants and hoses complying with the applicable requirements of this Section.

2.1.2 If the unit is intended to operate in cold weather, the entire water fire fighting system is to be protected from freezing. This includes tanks used as intermediate storage tanks as defined in [2.4].

2.2 Fire pumps

2.2.1 At least two independently driven power pumps are to be provided, each arranged to draw directly from the sea and discharge into a fixed fire main. Particular arrangements are to satisfy the requirements of [2.4].

2.2.2 At least one of the required pumps is to be dedicated for fire-fighting duties and be available for such duties at all times.

2.2.3 Except as provided in [2.2.2], sanitary, ballast, bilge or general service pumps may be accepted as fire pumps, provided that they are not normally used for pumping oil.

2.2.4 The arrangement of the pumps, sea suctions, piping, valves and sources of power is to be such that a fire or flooding in any one space will not put all fire pumps out of action.

2.2.5 The capacity of the required pumps is to be appropriate to the fire-fighting services supplied from the fire main. Where more pumps than required are installed, their capacity are to be to the satisfaction of the Society.

2.2.6 For all units, the Society requires a calculation of the water demand.

2.2.7 Each pump is to be able to maintain a pressure of at least 350 kPa at any hydrant with two 19 mm nozzles in action.

In addition of the water demand from the two hydrants mentioned above, where a foam system is provided for protection of the helideck, the pump is also to be capable of maintaining a pressure of 700 kPa at the foam installation and the water consumption used for foam system is to be added to the pump capacity.

If the water consumption for any other fire protection or fire-fighting purpose should exceed the rate of the helideck foam installation, this consumption is to be the determining factor in calculating the required capacity of the fire pumps.

2.2.8 Where either of the required fire pumps is located in a space not normally manned and, in the opinion of the Society, is relatively far removed from working areas, suitable provisions are to be made for remote start-up of that pump and remote operation of associated suction and discharge valves.

2.2.9 Every centrifugal pump which is connected to the fire main is to be fitted with a non-return valve.

2.2.10 Relief valves are to be provided in conjunction with all pumps connected to the fire main if the pumps are capable of developing a pressure exceeding the design pressure of the fire main, hydrant and hoses. Such valves are to be so placed and adjusted as to prevent excessive pressure in the fire main system.

2.3 Fire mains and hydrants

2.3.1 Material

Materials rendered ineffective by heat are not to be used for fire mains and hydrants unless adequately protected. The pipes and hydrants are to be so placed that the fire hoses can be easily coupled to them.

Note 1: For plastic pipes, the level of the fire endurance test (L1, L2, L3) requirements are given in Ch 1, App 1.

Suitable drainage provisions are to be provided for fire main piping.

2.3.2 Diameter of fire mains

The diameter of the fire main and water service pipes are to be sufficient for the effective distribution of the maximum required discharge from the required fire pumps operating simultaneously.

2.3.3 Pressure of the fire main

With the required fire pumps operating simultaneously, the pressure maintained in the fire mains should be to the satisfaction of the Society and adequate for the safe and efficient operation of all equipment supplied therefrom.

2.3.4 Routing of the fire main

Where practicable, the fire main is to be routed clear of hazardous areas and be arranged in such a manner as to make maximum use of any thermal shielding or physical protection afforded by the structure of the unit.

2.3.5 Isolating valves

a) The fire main is to be provided with isolating valves located so as to permit optimum utilization in the event of physical damage to any part of the fire main.

Note 1: For floating storage oil units, isolation valves are to be fitted in the fire main at the accommodation block fronts in a protected position and on the tank deck at intervals of not more than 40 m to preserve the integrity of the fire main system in case of fire or explosion of on the cargo area.

b) The fire main is not to have connections other than those necessary for fire-fighting purposes.

2.3.6 Hydrants, hoses and nozzles

a) A cock or a valve is to be fitted to serve each fire hydrant so that any fire hose may be removed while the fire pumps are operating.

b) The number and position of the hydrants is to be such that at least two jets of water, not emanating from the same hydrant, one of which should be from a single length of fire hose, may reach any part of the unit normally accessible to those on board while the unit is operating. A hose is to be provided for every hydrant.

c) Fire hoses are to be of non perishable material and of a type approved by the Society. They are to be of sufficient length to project a jet of water to any of the spaces in which they are required to be used. Each hose is to be provided with a dual-purpose nozzle and the necessary couplings. Hoses specified in this Chapter as “fire hoses” are, together with any necessary fittings and tools, to be kept ready for use in conspicuous positions near the water service hydrants or connections. Fire hoses are to have a length of at least 10 m, but not more than:
   - 15 m in machinery spaces
   - 20 m in other spaces and open decks
   - 25 m for open decks on units with a maximum breadth in excess of 30 m.

d) Dual purpose jet spray nozzles are to be fitted throughout the unit and are to comply with the following requirements:
   - Standard nozzle sizes are to be 12 mm, 16 mm and 19 mm or as near thereto as possible. Larger diameter nozzles may be permitted at the discretion of the Society.
   - For accommodation and service spaces, a minimum nozzle diameter of 12 mm is to be used.
   - For machinery spaces and exterior locations, the nozzle size is to be such as to obtain the maximum discharge possible from two jets of water at the pressure specified in [2.2.7] from the smallest pump, provided that a maximum nozzle size of 19 mm is used.

2.3.7 Shore connection

The surface unit is to be provided with at least one international shore connection complying with the requirements of Ch 4, Sec 11, [2].

Facilities are to be available enabling such a connection to be used on any side of the unit.

2.4 Particular arrangements

2.4.1 Supply

At least two water supply sources (sea chests, valves, strainers and pipes) are to be provided and so arranged that one supply source failure will not put all supply sources out of action.

For self-elevating units, the following additional fire water supply measures are to be provided:

a) Water is to be supplied from sea water main filled by at least two submersible pumping systems. One system failure will not put the other system(s) out of function, and

b) Water is to be supplied from drill water system while unit lifting or lowering. Water stored in the drill water tank(s) is not less than 40 m^3 plus engine cooling water consumptions before unit lifting or lowering. Alternatively, water may be supplied from buffer tank(s) in which sea water stored is not less the quantity as the above mentioned.

2.4.2 Fire mains permanently loaded with water

For particular units, the Society may consider a fire main permanently loaded with water by means of:

a) a pressure tank associated with a dedicated replenishment pump, or

b) a fire main arranged in loop and permanently pressurized by jockey pumps provided in sufficient number.

In that case, the ready availability of water supply is to be such that at least one effective jet of water is immediately available from any hydrant and so as to ensure the continuation of the output of water by the automatic starting of one of the required fire pump.

3 Portable fire-extinguishers

3.1 General

3.1.1 The Society may require tests to be carried out to verify the efficiency of the extinguishers provided on board the unit.

3.2 Type and design

3.2.1 Portable fire-extinguishers are to comply with the requirements of Ch 4, Sec 11.

3.3 Arrangement of fire extinguishers

3.3.1 Except for the supplemental arrangements provided in [3.3.2], portable fire extinguishers in accommodation spaces, service spaces, control stations, machinery spaces of category A, other machinery spaces, cargo spaces, weather deck and other spaces should be provided in number and arrangement in accordance with the guidance provided by the Organization and to the satisfaction of the Society.

Note 1: Refer to the Unified Interpretation of SOLAS chapter II-2 on the Number and Arrangement of Portable Fire Extinguishers on Board Ships (MSC.1/Circ.1275).

3.3.2 Machinery spaces, working spaces, cargos spaces, weather decks and other spaces are to be provided with portable fire-extinguishers in accordance with Tab 1. When the requirements of Tab 1 differ from the provisions of [3.3.1], the requirements of Tab 1 are to be followed.

In all cases, the selection of the fire-extinguishing medium is to be based on the fire hazard for the space protected.

Note 1: Refer to the IMO Res. A 951(23) Improved Guidelines for Marine Portable Fire Extinguishers.

Table 1 : Number and distribution of portable fire-extinguishers

Type of space	Minimum number of extinguishers**(1)**	Class(es) of extinguisher(s) **(3)**
Space containing the controls for the main source of electrical power	1 1 additional extinguisher suitable for electric fires when main switchboards are arranged in the space	A and/or C
Cranes - with electric motors / hydraulics	0	
Cranes - with internal combustion engine	2 (1 in cabin and 1 at exterior of engine compartment)	B
Drill floor	2 (1 at each exit)	C
Helidecks	In accordance with Ch 4, Sec 10	B
Machinery spaces of category A	In accordance with [5]	B
Machinery spaces of category A which are periodically unattended	At each entrance, in accordance with [5]**(2)**	B
Main switchboards	2 in the vicinity	C
Mud pits, mud processing areas	1 for each enclosed space **(4)**	B

(1) Minimum size should be in accordance with FSS Code, Ch 4.
(2) A portable extinguisher provided for that space may be located outside that space near the entrance. This extinguisher may also be considered as satisfying the provisions for the space in which it is located.
(3) Classes of portable extinguishers are only for reference. Refer to IMO Res. A951(23) Improved Guidelines for Marine Portable Fire Extinguishers.
(4) Travel distance to an extinguisher is not to exceed 10 m for open space.

3.3.3 One of the portable fire extinguishers intended for use in any space is to be stowed near the entrance to that space.

3.3.4 Instruction plates are to be fitted, either near the extinguishers or on the extinguishers themselves, stating that a non-recharged extinguisher is not to be put back into place.

3.3.5 Fire extinguishers are to be situated ready for use at easily places, which can be reached quickly and easily at any time in the event of a fire, and in such a way that their serviceability is not impaired by the weather, vibration or other external factors.

4 Fixed fire-extinguishing systems

4.1 Types of fixed fire-extinguishing systems

4.1.1 A fixed fire extinguishing system required by [5] may be any of the following systems:

a) a fixed gas fire-extinguishing system complying with the provisions of Ch 4, Sec 11

b) a fixed high-expansion foam fire-extinguishing system complying with the provisions of Ch 4, Sec 11, and

c) a fixed pressure water-spraying fire-extinguishing system complying with the provisions of Ch 4, Sec 11

d) any other fixed fire extinguishing system considered equivalent by the Society and of a type approved by the Society.

4.1.2 Where a fixed fire-extinguishing system not required by this Chapter is installed, it shall meet the relevant requirements of this Chapter.

4.1.3 Fire-extinguishing systems using Halon 1211, 1301, and 2402 and perfluorocarbons are to be prohibited.

4.1.4 In general, the Society does not permit the use of steam as a fire-extinguishing medium in fixed fire-extinguishing systems. Where the use of steam is permitted by the Society, it shall be used only in restricted areas as an addition to the required fire-extinguishing system and shall comply with the requirements of Ch 4, Sec 11.

4.2 Closing appliances for fixed gas fire-extinguishing systems

4.2.1 Where a fixed gas fire-extinguishing system is used, openings which may admit air to, or allow gas to escape from, a protected space shall be capable of being manually closed from outside the protected space.

4.3 Storage rooms of fire-extinguishing medium

4.3.1 When the fire-extinguishing medium is stored outside a protected space, it is to be stored in a room which is located behind the forward collision bulkhead, if any, and is used for no other purposes. Any entrance to such a storage room is to be preferably from the open deck and is to be independent of the protected space. If the storage space is located below deck, it is to be located no more than one deck below the open deck and is to be directly accessible by a stairway or ladder from the open deck. Spaces which are located below deck or spaces where access from the open deck is not provided are to be fitted with a mechanical ventilation system designed to take exhaust air from the bottom of the space and are to be sized to provide at least 6 air changes per hour. Access doors are to open outwards, and bulkheads and decks, including doors and other means of closing any opening therein, which form the boundaries between such rooms and adjacent enclosed spaces, are to be gastight. For the purpose of the application of Ch 4, Sec 4, [1.2], such storage rooms are to be treated as fire control stations.

4.4 Water pumps for other fire-extinguishing systems

4.4.1 Pumps, other than those serving the fire main, required for the provision of water for fire-extinguishing systems required by the present Chapter, their sources of power and their controls are to be installed outside the space or spaces protected by such systems and are to be so arranged that a fire in the space or spaces protected will not put any such system out of action.

5 Fire-extinguishing arrangements in machinery spaces

5.1 Machinery spaces arrangement

5.1.1 General

a) The arrangement of machinery spaces is to be such that safe storage and handling of flammable liquids is ensured.

b) All spaces where oil-consuming installations, settling tanks or daily service fuel tanks are located are to be easily accessible and well ventilated.

c) Where leakage of flammable liquids may occur during normal service or routine maintenance work, special arrangement is to be made to prevent these fluids from reaching other parts of the machinery where danger of ignition may arise.

d) Materials used in machinery spaces are not normally to have properties increasing the fire potential of these rooms. Neither combustible nor oil-absorbing materials are to be used as flooring, bulkhead lining, ceiling or deck in the control room, machinery spaces, shaft tunnel or rooms where oil tanks are located. Where penetration of oil products is possible, the surface of the insulation is to be impervious to oil or oil vapours.

5.1.2 Segregation of fuel oil purifiers and other systems for preparing flammable liquids

a) The system (such as purifiers) for preparing flammable liquids for use in boilers and machinery, and separate oil systems with working pressure above 1,5 MPa and which are not part of the main engines, auxiliary engines or boilers etc., are subject to the following additional requirements.

b) The main components in the systems as per a) are to be placed in a separate room, enclosed by steel bulkheads extending from deck to deck and provided with self-closing steel doors.

Transfer pumps may be placed outside this room.

Note 1: Lubricating oil systems part of the main machinery may be located in the main engine room in location ventilated by extraction.

c) Rooms in which flammable liquids are handled as specified in item a) are to be provided with:

- Independent mechanical ventilation or ventilation arrangements which can be isolated from the machinery space ventilation.
- A fire detecting system.
- A fixed fire-extinguishing installation. The extinguishing installation is to be capable of being activated from outside the room. The extinguishing system is to be separated from the room, but may be a part of the main fire-extinguishing system for the machinery space. Closing of ventilation openings is to be effected from a position close to where the extinguishing system is activated.

d) Where the size of the engine room makes it impracticable to locate the main components of such systems in a separate space, specific measures with regard to the location, containment of possible leakages and shielding of the components, and to ventilation, are to be provided to the satisfaction of the Society, such as:

- fitting of drip trays and shielding for leakage containment
- location close to ventilation exhaust so as to avoid flammable gas accumulation in vicinity
- fitting of dedicated hood above for ventilation exhaust.

A local fixed fire-extinguishing system is to be provided, capable of being activated automatically or activated manually from the machinery control position or from another suitable location. If automatic release is provided, additional manual release is to be arranged.

5.2 Machinery spaces containing oil-fired boilers or oil fuel units

5.2.1 Fixed fire-extinguishing systems

Machinery spaces of category A containing oil fired boilers or oil fuel units are to be provided with any one of the fixed fire-extinguishing systems in [4.1].

In each case, if the engine-room and boiler room are not entirely separate, or if fuel oil can drain from the boiler room into the engine-room, the combined engine and boiler rooms are to be considered as one compartment.

5.2.2 Additional fire-extinguishing arrangements

a) There is to be in each boiler room or at an entrance outside of the boiler room at least one portable foam applicator unit of a type approved by the Society.

Note 1: The portable foam applicator unit is to consist of a foam nozzle of an inductor type capable of being connected to the fire main by a fire hose, together with a portable tank containing at least 20 l of foam-forming liquid and one spare tank of foam making liquid. The nozzle is to be capable of producing effective foam suitable for extinguishing an oil fire, at the rate of at least 1,5 m^3/min.

b) There are to be at least two portable foam extinguishers or equivalent in each firing space in each boiler room and in each space in which a part of the oil fuel installation is situated. There are to be not less than one approved foam-type extinguisher of at least 135 l capacity or equivalent in each boiler room. These extinguishers are to be provided with hoses on reels suitable for reaching any part of the boiler room. In the case of domestic boilers of less than 175 kW an approved foam-type extinguisher of at least 135 l capacity is not required.

c) In each firing space there is to be a receptacle containing at least 0,1 m^3 sand, sawdust impregnated with soda, or other approved dry material, along with a suitable shovel for spreading the material. An approved portable extinguisher may be substituted as an alternative.

5.3 Machinery spaces of category A containing internal combustion machinery

5.3.1 Fixed fire-extinguishing systems

Machinery spaces of category A containing internal combustion machinery are to be provided with one of the fixed fire-extinguishing systems required in [4.1].

5.3.2 Additional fire-extinguishing arrangements

a) There is to be at least one portable foam applicator unit of a type approved by the Society.

Note 1: Refer to Note 1 in [5.2.2].

b) There are to be in each such space approved foam-type fire extinguishers, each of at least 45 l capacity or equivalent, sufficient in number to enable foam or its equivalent to be directed onto any part of the fuel and lubricating oil pressure systems, gearing and other fire hazards. In addition, there is to be provided a sufficient number of portable foam extinguishers or equivalent which are to be so located that no point in the space is more than 10 m walking distance from an extinguisher and that there are at least two such extinguishers in each such space. For smaller spaces of cargo units, the Society may consider relaxing this requirement.

c) In the case of machinery spaces containing both boilers and internal combustion engines, [5.2] and [5.3] apply, with the exception that one of the foam fire extinguishers of at least 45 l capacity or equivalent may be omitted provided that the 136 l extinguisher can efficiently and readily protect the area covered by the 45 l extinguishers.

5.4 Machinery spaces containing steam turbines or enclosed steam engines

5.4.1 Fixed fire-extinguishing systems

In spaces containing steam turbines or enclosed steam engines used for main propulsion or other purposes having in the aggregate a total output of not less than 375 kW, one of the fire-extinguishing systems specified in [4.1] is to be provided if such spaces are periodically unattended.

5.4.2 Additional fire-extinguishing arrangements

a) There are to be approved foam fire extinguishers, each of at least 45 l capacity or equivalent, sufficient in number to enable foam or its equivalent to be directed on to any part of the pressure lubrication system, on to any part of the casings enclosing pressure-lubricated parts of the turbines, engines or associated gearing, and any other fire hazards. However, such extinguishers are not to be required if protection, at least equivalent to that required by this item, is provided in such spaces by a fixed fire-extinguishing system fitted in compliance with [4.1].

b) There is to be a sufficient number of portable foam extinguishers or equivalent which are to be so located that no point in the space is more than 10 m walking distance from an extinguisher and that there are at least two such extinguishers in each such space, except that such extinguishers are not to be required in addition to any provided in compliance with item b) of [5.2.2].

c) There is to be at least one CO_2 or powder extinguisher in the proximity of any electric switchboard or section board having a power of 20 kW and upwards.

5.5 Other machinery spaces

5.5.1 Where, in the opinion of the Society, a fire hazard exists in any machinery space for which no specific provisions for fire-extinguishing appliances are prescribed in [5.2], [5.3] and [5.4], there is to be provided in or adjacent to that space, such a number of approved portable fire extinguishers or other means of fire extinction as the Society may deem sufficient.

5.6 Fixed local application fire-extinguishing systems

5.6.1 Machinery spaces of category A above 500 m^3 in volume shall, in addition to the fixed fire-extinguishing system required in [5.3.1], be protected by fixed water-based or equivalent local application fire-extinguishing system complying with the provisions of Ch 4, Sec 11. In the case of periodically unattended machinery spaces, the fire-extinguishing system shall have both automatic and manual release capabilities. In the case of continuously manned machinery spaces, the fire-extinguishing system is only required to have a manual release capability.

5.6.2 Fixed local application fire-extinguishing systems are to protect areas such as the following, without the necessity of engine shutdown, personnel evacuation, or sealing of the spaces:

- the fire hazard portions of internal combustion machinery
- the boiler fronts
- the fire hazard portions of incinerators
- the purifiers for heated fuel oil
- the oil fired equipment, such as inert gas generators and thermal oil heaters.

5.6.3 Activation of any local application system shall give a visual and distinct audible alarm in the protected space and at continuously manned stations. The alarm shall indicate the specific system activated. The system alarm requirements described within this requirement are in addition to, and not a substitute for, the detection and fire alarm system required elsewhere in this Chapter.

6 Fire-extinguishing arrangements in service spaces

6.1 Spaces containing flammable liquid

6.1.1 Paint lockers are to be protected by:

a) a carbon dioxide system, designed to give a minimum volume of free gas equal to 40% of the gross volume of the protected space

b) a dry powder system, designed for at least 0,5 kg powder/m^3

c) a water spraying or sprinkler system, designed for 5 l/min·m^2. Water spraying systems may be connected to the fire main of the unit, or

d) a system providing equivalent protection, as determined by the Society.

In all cases, the system is to operable from outside the protected space.

6.1.2 Flammable liquid lockers are to be protected by an appropriate fire-extinguishing arrangement approved by the Society.

6.1.3 For lockers of a deck area of less than 4 m^2, which do not give access to accommodation spaces, a portable carbon dioxide fire extinguisher sized to provide a minimum volume of free gas equal to 40% of the gross volume of the space may be accepted in lieu of a fixed system. A discharge port is to be arranged in the locker to allow the discharge of the extinguisher without having to enter into the protected space. The required portable fire extinguisher is to be stowed adjacent to the port. Alternatively, a port or hose connection may be provided to facilitate the use of fire main water.

6.2 Deep-fat cooking equipment

6.2.1 Deep-fat cooking equipment is to be fitted with the following:

a) an automatic or manual fire-extinguishing system tested to an international standard

b) a primary and backup thermostat with an alarm to alert the operator in the event of failure of either thermostat

c) arrangements for automatically shutting off the electrical power upon activation of the fire-extinguishing system

d) an alarm for indicating operation of the fire-extinguishing system in the galley where the equipment is installed, and

e) controls for manual operation of the fire-extinguishing system which are clearly labelled for ready use by the crew.

7 Additional fire-extinguishing arrangements on drilling units

7.1 Fixed fire-extinguishing systems on drilling and well test areas

7.1.1 In addition to the requirements of Articles [5] and Article [6]:

a) A fixed water-spray system is to be provided to protect drilling area. The minimum water application rate is to be not less than 20,4 l/min·m^2, or

b) At least two dual-purpose (jet/spray) fire monitors are to be installed to cover drilling and well test areas. The minimum capacity of each monitor is to be not less than 100 m^3/h. The monitors may be operated either remotely or locally. Monitors arranged for local operation are to be sited on an accessible protected position.

7.2 Fixed fire-extinguishing systems on mud processing area

7.2.1 A suitable fixed foam system is to be provided. The system is to be capable of delivering foam solution at a rate of not less than 6,5 l/min·m^2 (4,1 l/min·m^2 for Aqueous Film Forming Foam or Film-Forming Fluoroprotein Foam) for 15 minutes. Alternatively, a gas fixed fire-extinguishing system may be used for enclosed mud processing spaces.

Section 7 Suppression of Fire: Structural Integrity

1 Material of hull, superstructures, structural bulkheads, decks and deckhouses

1.1 General

1.1.1 The hull, superstructures, structural bulkheads, decks and deckhouses are to be constructed of steel or other equivalent material. For the purpose of applying the definition of steel or other equivalent material as given in Ch 4, Sec 1, [3.6.8], the "applicable fire exposure" is to be according to the integrity and insulation standards given in Ch 4, Sec 4, [1.2]. For example, where divisions such as decks or sides and ends of deckhouses are permitted to have B-0 fire integrity, the "applicable fire exposure" is to be half an hour.

2 Structure of aluminium alloy

2.1 General

2.1.1 Unless otherwise specified in [1.1.1], in cases where any part of the structure is of aluminium alloy, the following is to be applied:

a) the insulation of aluminium alloy components of A or B class divisions, except structure which, in the opinion of the Society, is non-load-bearing, is to be such that the temperature of the structural core does not rise more than 200°C above the ambient temperature at any time during the applicable fire exposure to the standard fire test, and

b) special attention is to be given to the insulation of aluminium alloy components of columns, stanchions and other structural members required to support lifeboat and liferaft stowage, launching and embarkation areas, and A and B class divisions to ensure that:

   1) for such members supporting lifeboat and liferaft areas and A class divisions, the temperature rise limitation specified in item a) shall apply at the end of one hour, and

   2) for such members required to support B class divisions, the temperature rise limitation specified in item a) shall apply at the end of half an hour.

3 Machinery spaces of category A

3.1 Crowns and casings

3.1.1 Crowns and casings of machinery spaces of category A are to be of steel construction and are to be insulated as required by Ch 4, Sec 4, [1.2] as appropriate.

3.2 Floor plating

3.2.1 The floor plating of normal passageways in machinery spaces of category A are to be made of steel.

4 Materials of overboard fittings

4.1 General

4.1.1 Materials readily rendered ineffective by heat are not to be used for overboard scuppers, sanitary discharges, and other outlets which are close to the waterline and where the failure of the material in the event of fire would give rise to danger of flooding.

Section 8 Escape

1 Notification of people on board

1.1 General emergency alarm system

1.1.1 A general emergency alarm system required in Ch 2 Sec 3 [7.14] is to be used for notifying personnel on board of a fire.

2 Means of escape

2.1 General requirements

2.1.1 Unless expressly provided otherwise in this Article, at least two widely separated and ready means of escape are to be provided from all spaces or groups of spaces.

Note 1: In case notation **PROC** is not granted to the unit, escape routes in the topsides modules are not covered by the present Section.

2.1.2 Lifts are not to be considered as forming one of the means of escape as required by this Section.

2.1.3 Embarkation areas are to be adequately protected to ensure safe access to the evacuation means during an accidental event and for a period of time sufficient for evacuation operations.

2.1.4 Every escape route should be readily accessible and unobstructed and all exit doors along the route should be readily operable.

2.1.5 For drilling units, consideration should be given by the Society to the sitting of superstructures and deckhouses such that in the event of fire at the drill floor at least one escape route to the embarkation position and survival craft is protected against radiation effects of that fire as far as practicable.

2.1.6 Stairways and corridors used as means of escape shall be not less than 700 mm in clear width and shall have a handrail on one side. Stairways and corridors with a clear width of 1800 mm and over shall have handrails on both sides. Clear width is considered the distance between the handrail and the bulkhead on the other side or between the handrails. The angle of inclination of stairways should be, in general, 45°, but not greater than 50°, and in machinery spaces and small spaces not more than 60°. Doorways which give access to a stairway shall be of the same size as the stairway.

2.2 Means of escape from control stations, accommodation spaces and service spaces

2.2.1 General requirements

a) Stairways should normally be used for means of vertical escape; however, a vertical ladder may be used for one of the means of escape when the installation of a stairway is shown to be impracticable.

b) In every general area which is likely to be regularly manned or in which personnel are accommodated at least two separate escape routes should be provided, situated as far apart as practicable, to allow ready means of escape to the open decks and embarkation stations.

c) All stairways in accommodation and service spaces and control stations are to be of steel frame construction except where the Society sanctions the use of other equivalent material.

d) Escape routes are to be of suitable size to enable quick and efficient movement of the maximum of personnel who may require to use them, and for easy manoeuvring of fire-fighting equipment and use of stretchers.

e) Doors in escape routes are, in general, to open in way of the direction of escape, except that:

   1) individual cabin doors may open into the cabins in order to avoid injury to persons in the corridor when the door is opened, and

   2) doors in vertical emergency escape trunks may open out of the trunk in order to permit the trunk to be used both for escape and for access.

f) At all levels of accommodation there are to be provided at least two widely separated means of escape from each restricted space or group of spaces.

g) In addition to the emergency lighting, the means of escape in accommodation areas, including stairways and exits, are to be marked by lighting or photoluminescent strip indicators placed not more than 300 mm above the deck at all points of the escape route, including angles and intersections. The marking is to enable personnel to identify the routes of escape and readily identify the escape exits. If electric illumination is used, it is to be supplied by the emergency source of power and it is to be so arranged that the failure of any single light or cut in a lighting strip will not result in the marking being ineffective.

Additionally, escape route signs and fire equipment location markings are to be of photoluminescent material or marked by lighting. Such lighting or photoluminescent equipment is to be evaluated, tested and applied in accordance with the FSS Code.

2.2.2 Escape from spaces below the lowest open deck

Below the lowest open deck the main means of escape is to be a stairway and the second escape may be a trunk or a stairway.

2.2.3 Escape from spaces above the lowest open deck

Above the lowest open deck the means of escape are to be stairways or doors to an open deck or a combination thereof.

2.2.4 Dead-end corridors

No dead-end corridors having a length of more than 7 m are to be accepted.

2.2.5 Continuity of escape routes

The number and continuity of escape routes are to be at the satisfaction of the Society.

2.2.6 Precautions against hazardous areas

The escape routes are to be routed, as far as practicable, outside hazardous areas and due consideration is to be given to protection of personnel from effects of gas, smoke and heat.

2.2.7 Dispensation from one of the two means of escape

Exceptionally, the Society may permit only one of the means of escape, due regard being paid to the nature and location of spaces and to the number of persons who might normally be accommodated or employed here.

2.2.8 Means of escape from the steering gear space

a) Steering gear spaces which do not contain the emergency steering position need only have one means of escape.

b) Steering gear spaces containing the emergency steering position can have one means of escape provided it leads directly onto the open deck. Otherwise, two means of escape are to be provided but they do not need to lead directly onto the open deck.

c) Direct access to the open deck

Escape routes that pass only through stairways and/or corridors that have fire integrity protection equivalent to steering gear spaces are considered as providing a “direct access to the open deck”.

2.3 Means of escape from machinery spaces

2.3.1 Means of escape from each machinery space are to comply with the following provisions:

a) Escape from machinery spaces of category A

Except as provided in the following item b), two means of escape are to be provided from each machinery space of category A. In particular, one of the following provisions is to be complied with:

1) two sets of steel ladders, as widely separated as possible, leading to doors in the upper part of the space, similarly separated and from which access is provided to the open deck. One of these ladders is to be located within a protected enclosure that satisfies Ch 4, Sec 4, [1.2.2], category (4), from the lower part of the space it serves to a safe position outside the space. Self-closing fire doors of the same integrity standards are to be fitted in the enclosure. The ladder is to be fixed in such a way that heat is not transferred into the enclosure through non-insulated fixing points. The enclosure is to have minimum internal dimensions of at least 800 mm x 800 mm and is to have emergency lighting provisions, or

2) one steel ladder leading to a door in the upper part of the space from which access is provided to the open deck and, additionally, in the lower part of the space and in a position well separated from the ladder referred to, a steel door capable of being operated from each side and which provides access to a safe escape route from the lower part of the space to the open deck.

b) Dispensation from two means of escape

Exceptionally, one means of escape may be permitted, due regard being paid to the nature and location of spaces and to the number of persons who might normally be employed there.

c) Escape from machinery spaces other than those of category A

From machinery spaces other than those of category A, two escape routes are to be provided except that a single escape route may be accepted for spaces that are entered only occasionally and for spaces where the maximum travel distance to the door is 5 m or less.

Note 1: In machinery spaces other than those of category A, which are not entered only occasionally, the travel distance shall be measured from any point normally accessible to the crew, taking into account machinery and equipment within the space.

d) Inclined ladders and stairways

Inclined ladders/stairways in machinery spaces being part of, or providing access to, escape routes but not located within a protected enclosure shall not have an inclination greater than 60° and shall not be less than 600 mm in clear width. Such requirement need not be applied to ladders/stairways not forming part of an escape route, only provided for access to equipment or components, or similar areas, from one of the main platforms or deck levels within such spaces.

e) Escape from machinery control rooms in machinery spaces of category "A"

Two means of escape shall be provided from the machinery control room located within a machinery space. At least one of these escape routes shall provide a continuous fire shelter to a safe position outside the machinery space.

f) Escape from main workshops in machinery spaces of category "A"

Two means of escape shall be provided from the main workshop within a machinery space. At least one of these escape routes shall provide a continuous fire shelter to a safe position outside the machinery space.

2.4 Fibre Reinforced Plastic (FRP) Gratings

2.4.1 FRP gratings may be used in locations where steel or an equivalent material is not specified by the rules.

FRP gratings are to:

- possess low flame spread characteristics
- generate not excessive quantities of smoke or toxic products as defined in the FTP Code
- have adequate structural fire integrity as defined in the USCG Marine Safety Manual Vol. II Para 5.C.6.f. Structural Fire Integrity Matrix or another recognized standard.

FRP grating are to undergo testing in accordance wit the above standards.

Section 9 Fire Plan

1 Fire control plans

1.1 Compilation of the fire control plans

1.1.1 Fire control plans are to be permanently exhibited for the guidance of the unit's officers.

1.1.2 Fire control plans are to be submitted for review and to clearly show:

a) locations of control stations

b) various fire sections enclosed by various classes of fire divisions

c) arrangement of fire detectors and manual fire alarm stations

d) arrangement of combustible gas detectors

e) arrangement of hydrogen sulphide gas detectors

f) locations of respiratory protection equipment for hydrogen sulphide

g) general alarm actuating positions

h) arrangement of various fire-extinguishing appliances

i) locations of fighter's outfits

j) location of helicopter crash kit

k) arrangement of water spray nozzles and sprinklers (if fitted)

l) locations of emergency shutdown (such as oil fuel source shutdown, engine shutdown, etc.) stations

m) the ventilating system including fire dampers positions, ventilating fans control positions with indication of identification numbers of ventilating fans serving each section

n) arrangement of fire/watertight doors and their remote control positions

o) blowout preventer control positions

p) escape route and means of access to different compartments, decks, etc.

q) locations of Emergency Escape Breathing Devices (EEBD)

r) arrangement of emergency muster stations and life-saving appliances.

1.1.3 Alternatively, at the discretion of the Society, the aforementioned details may be set out in a booklet, a copy of which is to be supplied to each officer, and one copy is to at all times be available on board in an accessible position. Plans and booklets are to be kept up to date; any alterations thereto are to be recorded as soon as practicable. Description in such plans and booklets is to be in the language or languages required by the Owner. If the language is neither English nor French, a translation into one of those languages is to be included.

In addition, instructions concerning the maintenance and operation of all the equipment and installations on board for the fighting and containment of fire are to be kept under one cover, readily available in an accessible position.

1.1.4 Special equipment provided for the carriage of dangerous goods, if fitted, is to be shown.

1.2 Location of the fire control plans

1.2.1 A duplicate set of fire control plans or a booklet containing such plans is to be permanently stored in a prominently marked weathertight enclosure outside the deckhouse for the assistance of shore-side fire-fighting personnel.

Section 10 Helicopter Facilities

Symbols

D-value : D-value means the largest dimension of the helicopter when the rotors are turning, measured from the most forward position of the main rotor tip path plane to the most rearward position of the tail rotor path plane or helicopter structure.

1 General

1.1 Application

1.1.1 In addition to complying with the requirements of the other Sections of this Chapter, as appropriate, units equipped with helicopter facilities are to comply with those of this Section.

Items e) and f) of [3.1.1] and Articles [5] and [6] do not contain requirements applicable for the purpose of classification; they have been reproduced for reference purposes only.

1.2 Contents

1.2.1 This Section includes the provisions of the MODU Code, Sec 9.16.

This section provides additional measures in order to address the fire safety objectives for units fitted with facilities for helicopters and meets the following functional provisions:

a) helideck structure is to be adequate to protect the unit from the fire hazards associated with helicopter operations

b) fire-fighting appliances is to be provided to adequately protect the unit from the fire hazards associated with helicopter operations

c) refuelling facilities and operations is to provide the necessary measures to protect the unit from the fire hazards associated with helicopter operations

d) helicopter facility operation manuals and training should be provided.

1.3 Definitions

1.3.1 Helideck

Helideck is a purpose-built helicopter landing area located on a unit including all structure, fire-fighting appliances and other equipment necessary for the safe operation of helicopters.

1.3.2 Helicopter facilities

Helicopter facility is a helideck including any refuelling and hangar facilities.

1.4 Recognised codes

1.4.1 Recognised code, as concerned with helicopter facilities, are:

- CAA CAP 437 “Civil Aviation Authority; Offshore Helicopter Landing Areas -Guidance on Standards”
- MODU code Ch 13

2 Structure

2.1 Construction of steel or other equivalent materials

2.1.1 The construction of the helidecks is to be of steel or other equivalent materials. If the helideck forms the deckhead of a deckhouse or superstructure, it is to be insulated to A-60 class standard.

2.2 Construction of aluminium or other low melting point metals

2.2.1 If the Society permits aluminium or other low melting point metal construction that is not made equivalent to steel and if the helideck is located above the unit’s deckhouse or similar structure, the following conditions are to be satisfied:

a) the deckhouse top and bulkheads under the helideck are to have no opening

b) windows under the helideck are to be provided with steel shutters.

2.3 Means of escape

2.3.1 A helideck is to be provided with both a main and an emergency means of escape and access for fire-fighting and rescue personnel. These are to be located as far apart from each other as is practicable and preferably on opposite sides of the helideck.

3 Fire-fighting appliances

3.1 General

3.1.1 Where areas of a unit are designated for helicopter facilities, the fire fighting equipment as given below are to be provided and so arranged as to adequately protect both the helicopter deck and fuel storage areas:

a) at least two dry powder extinguishers having a total capacity of not less than 45 kg but not less than 9 kg each

b) carbon dioxide extinguishers of a total capacity of not less than 18 kg or equivalent, one of these extinguishers being so equipped as to enable it to reach the engine area of any helicopter using the deck. The carbon dioxide extinguishers are to be located so that they would not be vulnerable to the same damage as the dry powder extinguishers

c) a suitable foam application system consisting of monitors or hose streams or both is to be installed.The system is to be capable of delivering foam solution to all parts of the helideck in all weather conditions in which the helideck is intended to be available for helicopter operations. The minimum capacity of the foam production system is to be dependent of the area to be protected, as defined below:
   - a minimum application rate of 6,0 l/min·m² (4,1 l/min·m² for Aqueous Film Forming Foam or Film-Forming Fluoroprotein Foam), within a circle having a diameter equal to the D-value
   - a minimum of 5 min discharge capability is to be provided
   - foam delivery at the minimum application rate is to start within 30 s of system activation.

   The Society may accept other fire-fighting systems which provide a fire-extinguishing capability at least as effective as the required foam application system

d) the principal agent is to meet the applicable performance standards of the International Civil Aviation Organization “Airport Services Manual, Part 1 - Rescue and Firefighting, Chapter 8 - Extinguishing Agent Characteristics, Paragraph 8.1.5 - Foam Specifications Table 8-1, Level “B” foam”, and be suitable for use with salt water

e) at least two dual-purpose nozzles (jet/spray) and hoses sufficient in length to reach any part of the helideck. The nozzles and hoses are to be of a type approved by the Society

f) two sets of fire-fighter’s outfits, and

g) at least the following equipment, stored in a manner that provides for immediate use and protection from the elements:
   - adjustable wrench
   - blanket, fire-resistant
   - cutters, bolt 60 cm
   - hook, grab or salving
   - hacksaw, heavy duty complete with 6 spare blades
   - ladder
   - lift line 5 mm diameter and 30 m in length
   - pliers, side-cutting
   - set of assorted screwdrivers, and
   - harness knife complete with sheath
   - crowbar

h) fire extinguishing arrangements for the protection of the fuel storage/fuel pumping are to be at the satisfaction of the Society.

3.1.2 Drainage facilities in way of helidecks are to be:
- constructed of steel or other arrangements providing equivalent fire safety
- lead directly overboard independent of any other system
- designed so that drainage does not fall onto any part of the unit.

4 Helicopter refuelling and hangar facilities

4.1 “No smoking” signs

4.1.1 “NO SMOKING” signs are to be displayed at appropriate locations.

4.2 Hangar, refuelling and maintenance facilities

4.2.1 Hangar, refuelling and maintenance facilities are to be treated as category A machinery spaces with regard to structural fire protection, fixed fire-extinguishing and detection system requirements.

4.3 Arrangement of spaces containing the refuelling installations

4.3.1 General

Where the unit has helicopter refuelling, the following provisions are to be complied with:

a) A designated area is to be provided for the storage of fuel tanks and is to be:
   - as remote as is practicable from accommodation spaces, escape routes and embarkation stations
   - isolated from areas containing a source of vapour ignition.

b) The fuel storage area is to be provided with arrangements whereby fuel spillage may be collected and drained to a safe location.

c) Tanks and associated equipment are to be protected against physical damage and from a fire in an adjacent space or area.

d) Where portable fuel storage tanks are used, special attention is to be given to:
   - design of the tank for its intended purpose
   - mounting and securing arrangements
   - electric bonding
   - inspection procedures.

e) Storage tank fuel pumps are to be provided with means which permit shutdown from a safe remote location in the event of a fire. Where a gravity-fuelling system is installed, equivalent closing arrangements is to be provided to isolate the fuel source.

f) The fuel pumping unit is to be connected to one tank at a time. The piping between the tank and the pumping unit is to be of steel or equivalent material, as short as possible, and protected against damage.

g) Electrical fuel pumping units and associated control equipment should be of a type suitable for the location and potential hazards.

h) Fuel pumping units are to incorporate a device which will prevent over-pressurization of the delivery or filling hose.

i) Equipment used in refuelling operations are to be electrically bonded.

4.3.2 Ventilation

Enclosed hangar facilities or enclosed spaces containing refuelling installations are to be provided with mechanical ventilation with the following features.

a) Capacity of ventilation systems

   There is to be provided an effective power ventilation system sufficient to give at least 6 air changes per hour.

   The Society may require an increased number of air changes when the refuelling unit installations are used.

b) Performance of ventilation systems

   1) Ventilation fans are to be normally run continuously whenever the refuelling unit installations are used. Where this is impracticable, they are to be operated for a limited period daily as weather permits. One or more portable combustible gas detecting instruments are to be carried for this purpose. The system is to be entirely separated from other ventilating systems. The system is to be capable of being controlled from a position outside such spaces.

   2) The ventilation system is to be such as to prevent air stratification and the formation of air pockets.

   3) Ventilation fans are to be of non-sparking type.

c) Indication of ventilation systems

   Means are to be provided on the central control room to indicate any loss of the required ventilating capacity.

d) Closing appliances and ducts

   Arrangements are to be provided to permit a rapid shut-down and effective closure of the ventilation system from outside of the space in case of fire, taking into account the weather and sea conditions.

e) Permanent openings

   Permanent openings in the side plating, the ends or deckhead of the space are to be so situated that a fire in the space containing the refuelling installations does not endanger stowage areas and embarkation stations for survival craft and accommodation spaces, service spaces and control stations in superstructures and deckhouses above the spaces containing the refuelling installations.

4.3.3 Electric equipment and wiring

Electric equipment and wiring in enclosed hangars or enclosed spaces containing refuelling installations are to comply with the following requirements:

a) Electrical equipment and wiring are to be of a type suitable for use in an explosive petrol and air mixture.

b) Electrical equipment and wiring, if installed in an exhaust ventilation duct, are to be of a type approved for use in explosive petrol and air mixtures and the outlet from any exhaust duct is to be sited in a safe position, having regard to other possible sources of ignition.

c) Other equipment which may constitute a source of ignition of flammable vapours is not to be permitted.

5 Occasional and emergency helicopter operations

5.1 General

5.1.1 Where helicopters land or conduct winching operations on an occasional or emergency basis on units without helidecks, fire-fighting equipment fitted in accordance with the requirements of Ch 4, Sec 1 may be used. This equipment is to be made readily available in close proximity to the landing or winching areas during helicopter operations.

6 Operations manual

6.1 General

6.1.1 Each helicopter facility is to have an operations manual, including a description and a checklist of safety precautions, procedures and equipment requirements. This manual may be part of the unit's emergency response procedures.

6.1.2 The procedures and precautions during refuelling operations are to be in accordance with industry recognised practice.

Section 11 Fire Safety Systems

1 General

1.1 Application

1.1.1 This Section applies to fire safety systems as referred to in the Rules.

1.1.2 Piping systems included in fire safety systems covered by this Section are to comply with the requirements of Ch 1, Sec 7, unless otherwise specified in the present Section

1.1.3 Pressure vessels included in fire safety systems covered by this Section are to comply with the requirements of Ch 1, Sec 3, unless otherwise specified in the present Section.

1.2 Statutory requirements

1.2.1 Fire safety systems are to be in accordance with the provision of the SOLAS Convention and the FSS Code, as applicable.

1.3 Use of toxic extinguishing media

1.3.1 The use of a fire-extinguishing medium which, in the opinion of the Society, either by itself or under expected conditions of use gives off toxic gases, liquids and other substances in such quantities as to endanger persons shall not be permitted.

2 International shore connections

2.1 Engineering specifications

2.1.1 Standard dimensions

Standard dimensions of flanges for the international shore connection are to be in accordance with Tab 1 (see also Fig 1).

Figure 1 : International shore connection

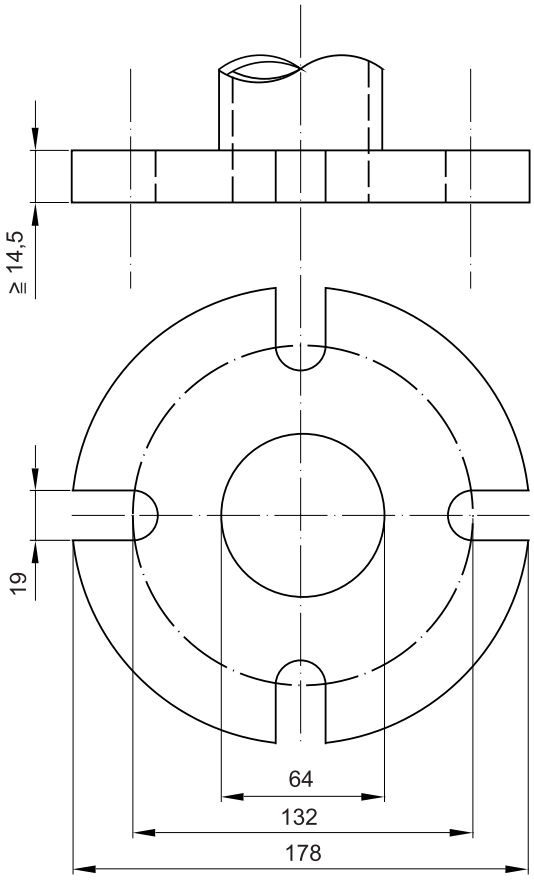

Table 1 : Standard dimensions

Description	Dimension
Outside diameter	178 mm
Inside diameter	64 mm
Bolt circle diameter	132 mm
Slots in flange	4 holes, 19 mm in diameter spaced equidistantly on a bolt circle of the above diameter, slotted to the flange periphery
Flange thickness	14,5 mm minimum
Bolts and nuts	4, each of 16 mm diameter, 50 mm in length

2.1.2 Materials and accessories

International shore connections are to be of steel or other equivalent material and are to be designed for 1,0 N/mm^2 services. The flange is to have a flat face on one side and, on the other side, to be permanently attached to a coupling that fitting the unit's hydrant and hose. The connection is to be kept aboard the unit together with a gasket of any material suitable for 1,0 N/mm^2 services, together with four bolts of 16 mm diameter and 50 mm in length, four 16 mm nuts and eight washers.

3 Fire extinguishers

3.1 Type approval

3.1.1 All fire extinguishers are to be of approved types and designs.

3.2 Engineering specifications

3.2.1 Fire extinguisher

a) Safety requirements

Fire extinguishers containing an extinguishing medium which, in the opinion of the Society, either by itself or under the expected conditions of use gives off toxic gases in such quantities as to endanger persons or which is an ozone depleting substance are not to be permitted.

b) Quantity of medium

1) Each powder or carbon dioxide extinguisher is to have a capacity of at least 5 kg and each foam extinguisher is to have a capacity of at least 9 l. The mass of all portable fire extinguishers is not to exceed 23 kg and they are to have a fire-extinguishing capability at least equivalent to that of a 9 l fluid extinguisher.

2) The Society determines the equivalents of fire extinguishers.

3.2.2 Portable foam applicator

a) A portable foam applicator unit shall consist of a foam nozzle/branch pipe, either of a self-inducing type or in combination with a separate inductor, capable of being connected to the fire main by a fire hose, together with a portable tank containing at least 20 l of foam concentrate and at least one spare tank of foam concentrate of the same capacity.

b) System performance

1) The nozzle/branch pipe and inductor shall be capable of producing effective foam suitable for extinguishing an oil fire, at a foam solution flow rate of at least 200 l/min at the nominal pressure in the fire main.

2) The foam concentrate shall be approved.

3) The values of the foam expansion and drainage time of the foam produced by the portable foam applicator unit shall not differ more than ± 10% of that determined in item 2).

4) The portable foam applicator unit shall be designed to withstand clogging, ambient temperature changes, vibration, humidity, shock, impact and corrosion normally encountered on units.

4 Fixed gas fire-extinguishing systems

4.1 Engineering specifications

4.1.1 General

a) Fire-extinguishing medium

1) Where the quantity of the fire-extinguishing medium is required to protect more than one space, the quantity of medium available need not be more than the largest quantity required for any one space so protected. The system is to be fitted with normally closed control valves arranged to direct the agent into the appropriate space.Adjacent spaces with independent ventilation systems not separated by at least A-0 class divisions should be considered as the same space.

2) The volume of starting air receivers, converted to free air volume, is to be added to the gross volume of the machinery space when calculating the necessary quantity of the fire-extinguishing medium. Alternatively, a discharge pipe from the safety valves may be fitted and led directly to the open air.

3) Means are to be provided for the crew to safely check the quantity of the fire-extinguishing medium in the containers.It shall not be necessary to move the containers completely from their fixing position for this purpose. For carbon dioxide systems, hanging bars for a weighing device above each bottle row, or other means shall be provided. For other types of extinguishing media, suitable surface indicators may be used.

4) Containers for the storage of fire-extinguishing medium, piping and associated pressure components shall be designed to pressure codes of practice to the satisfaction of the Society having regard to their locations and maximum ambient temperatures expected in service.

b) Installation requirements

1) The piping for the distribution of fire-extinguishing medium is to be arranged and discharge nozzles so positioned that a uniform distribution of the medium is obtained. System flow calculations is to be performed using a calculation technique acceptable to the Society.

   In machinery spaces, the discharge nozzles are to be positioned in the upper and lower parts of these spaces.

2) Except as otherwise permitted by the Society, pressure containers required for the storage of the fire-extinguishing medium, other than steam, are to be located outside the protected spaces in accordance with Ch 4, Sec 6, [4.3].

3) The storage of the fire extinguishing medium is not permitted within spaces which may contain air/flammable gas mixtures.

4) In piping sections where valve arrangements introduce sections of closed piping, such sections are to be fitted with a pressure relief valve and the outlet of the valve is to be led to open deck.

5) All discharge piping, fittings and nozzles in the protected spaces are to be constructed of materials having a melting temperature which exceeds 925°C. The piping and associated equipment are to be adequately supported.

6) A fitting is to be installed in the discharge piping to permit the air testing as required in [4.1.3], item g) 4).

c) System control requirements

1) The necessary pipes for conveying fire-extinguishing medium into the protected spaces are to be provided with control valves so marked as to indicate clearly the space to which the pipes are led. Suitable provision is to be made to prevent inadvertent release of the medium into the space. The pipes may pass through accommodation areas provided that they are of substantial thickness and that their tightness is verified with a pressure test, after their installation, at a pressure head not less than 5 N/mm^2. In addition, pipes passing through accommodation areas are to be joined only by welding and are not to be fitted with drains or other openings within such spaces. The pipes are not to pass through refrigerated spaces.

   Control valves are to be capable of local operation.

   The open or closed position of control valves is to be indicated.

   Means are to be provided in order to permit the blowing through each branch line of the piping system downstream of the master (control) valves.

2) Means are to be provided for automatically giving audible and visual warning of the release of fire-extinguishing medium into spaces in which personnel normally work or to which they have access. The audible alarms are to be located so as to be audible throughout the protected space with all machinery operating, and the alarms are to be distinguished from other audible alarms by adjustment of sound pressure or sound patterns. The pre-discharge alarm is to be automatically activated (e.g. by opening of the release cabinet door). The alarm is to operate for the length of time needed to evacuate the space, but in no case less than 20 seconds before the medium is released. Small spaces (such as compressor rooms, paint lockers, etc.) with only a local release need not be provided with such an alarm.

   Where audible alarms are fitted to warn of the release of fire-extinguishing medium into pump rooms, they may be of the pneumatic or electrical type:

   - pneumatically operated alarms

     Air operated alarms may be used provided the air supply is clean and dry.

- electrically operated alarms

  When electrically operated alarms are used, the arrangements are to be such that the electrical actuating mechanism is located outside the pump room except where the alarms are certified intrinsically safe.

Electrically operated alarms are to be supplied with power from the main and an emergency source of power. They are to differ from other signals transmitted to the protected space.

3) The means of control of any fixed gas fire-extinguishing system shall be readily accessible, simple to operate and shall be grouped together in as few locations as possible at positions not likely to be cut off by a fire in a protected space. At each location there shall be clear instructions relating to the operation of the system having regard to the safety of personnel.

4) Automatic release of fire-extinguishing medium is not to be permitted, except as permitted by the Society.

4.1.2 Carbon dioxide systems - General

a) Quantity of fire-extinguishing medium

1) For cargo spaces the quantity of carbon dioxide available shall, unless otherwise provided, be sufficient to give a minimum volume of free gas equal to 30% of the gross volume of the largest cargo space to be protected in the unit.

2) For machinery spaces the quantity of carbon dioxide carried is to be sufficient to give a minimum volume of free gas equal to the larger of the following volumes, either:

- 40% of the gross volume of the largest machinery space so protected, the volume to exclude that part of the casing above the level at which the horizontal area of the casing is 40% or less of the horizontal area of the space concerned taken midway between the tank top and the lowest part of the casing, or
- 35% of the gross volume of the largest machinery space protected, including the casing.

  In the calculation of 35% of the above-mentioned volume, the net volume of the funnel is to be considered up to a height equal to the whole casing height if the funnel space is in open connection with the machinery space without inter-position of closing means.

3) For the purpose of this item the volume of free carbon dioxide is to be calculated at 0,56 m^3/kg.

4) For machinery spaces, the fixed piping system is to be such that 85% of the gas can be discharged into the space within 2 minutes.

b) Controls

1) Carbon dioxide systems are to comply with the following requirements:

- two separate controls are to be provided for releasing carbon dioxide into a protected space and to ensure the activation of the alarm. One control is to be used for opening the valve of the piping which conveys the gas into the protected space and a second control is to be used to discharge the gas from its storage containers. Positive means (see Note 1) are to be provided so they can only be operated in that order, and
- the two controls are to be located inside a release box clearly identified for the particular space. If the box containing the controls is to be locked, a key to the box is to be in a break-glass-type enclosure conspicuously located adjacent to the box.

2) The pre-discharge alarm may be activated before the two separate system release controls are operated (e.g. by a micro-switch that activates the pre-discharge alarm upon opening the release cabinet door as per [4.1.1]. Therefore, the two separate controls for releasing carbon dioxide into the protected space (i.e. one control to open the valve of the piping which conveys the gas into the protected space and a second control used to discharge the gas from its storage containers) as per item b) 1) above can be independent of the control for activating the alarm.

   A single control for activation of the alarm is sufficient.

Note 1: The "positive means", referred to for the correct sequential operation of the controls, is to be achieved by a mechanical and/or electrical interlock that does not depend on any operational procedure to achieve the correct sequence of operation.

Note 2: The controls requirements detailed in item b) apply to the spaces identified in [4.1.1], item c) 2) to be provided with a pre-discharge alarm.

4.1.3 High-pressure carbon dioxide systems

a) The system is to be designed for an ambient temperature range of 0°C/55°C, as a rule.

b) Containers for the storage of the fire-extinguishing medium are to be designed and tested in accordance with the relevant requirements of Part C, Chapter 1.

c) The filling ratio of carbon dioxide bottles is to be normally 0,67 kg/l, or less, of the total internal volume; however, for bottles to be fitted in units which are to operate solely outside the tropical zone, the filling ratio may be 0,75 kg/l.

d) Piping and accessories are to generally satisfy the relevant requirements of Part C, Chapter 1.

e) For systems where carbon dioxide is stored at ambient temperature, the thickness of steel pipes is not to be less than the values given in Tab 2.

   Slightly smaller thicknesses may be accepted provided they comply with national standards.

   The thickness of threaded pipes is to be measured at the bottom of the thread.

f) Pipes are to be appropriately protected against corrosion. Steel pipes are to be, at least, zinc or paint coated, except those fitted in machinery spaces, with the reservation of the Society's acceptance.

g) After mounting onboard, and in complement to tests and inspections at the Manufacturer's workshop, as per requirements of Part C, Chapter 1, carbon dioxide pipes and their accessories are to undergo the following tests:

1) pipe lengths between bottles and master valves:

   a hydraulic test, at the workshop or on board, at 128 bar. When the hydraulic test is carried out at the workshop, at least test with inert gas or air, at 7 bar, is to be carried out on board

2) pipe lengths between master valves and nozzles:

   a test on board with inert gas or air, at 7 bar

3) master valves:

   a hydraulic test at 128 bar

4) a test of the free air flow in all pipes and nozzles, and

5) a functional test of the alarm equipment.

Table 2 : Minimum wall thickness for steel pipes for CO_2 fire-extinguishing systems

External diameter (mm)	Minimum wall thickness (mm)	
	Between bottles and master valves	Between master valves and nozzles
21,3 - 26,9	3,2	2,6
30,0 - 48,3	4,0	3,2
51,0 - 60,3	4,5	3,6
63,5 - 76,1	5,0	3,6
82,5 - 88,9	5,6	4,0
101,6	6,3	4,0
108,0 - 114,3	7,1	4,5
127,0	8,0	4,5
133,0 - 139,7	8,0	5,0
152,4 - 168,3	8,8	5,6

4.1.4 Low-pressure carbon dioxide systems

When carbon dioxide, instead of being contained in non-refrigerated high pressure bottles, is contained in refrigerated low pressure vessels, in addition to the requirements in [4.1.2] the following are to be complied with.

a) General

   Except where different requirements are given in this item, the requirements of [4.1.3] for systems with carbon dioxide contained in high pressure bottles are generally to be complied with.

b) Vessels and associated devices

1) The system control devices and the refrigerating plants are to be located within the same room where the pressure vessels are stored.

2) The rated amount of liquid carbon dioxide is to be stored in vessels under the working pressure in the range of 1,8 MPa to 2,2 MPa. The normal liquid charge in the container is to be limited to provide sufficient vapour space to allow for expansion of the liquid under the maximum storage temperatures that can be obtained corresponding to the setting of the pressure relief valves, but is not to exceed 95% of the volumetric capacity of the container.

3) The vessels are to be designed, constructed and tested in accordance with the requirements of Ch 1, Sec 3. For this purpose the design pressure is to be taken not less than the relief valve setting. In addition, for each vessel, provision is to be made for:

   - a pressure gauge
   - a high pressure alarm: not more than the setting of the relief valve
   - a low pressure alarm: not less than 1,8 MPa
   - branch pipes with stop valves for filling the vessel
   - discharge pipes
   - a liquid CO_2 level indicator, fitted on the vessel
   - two safety relief valves arranged so that either valve can be shut off while the other is connected to the vessel. The setting of the relief valves is to be not less than 1,1 times the working pressure. The capacity of each valve is to be such that the vapours generated due to fire can be discharged with a pressure rise not more than 20% above the setting pressure. The discharge from the safety valves is to be led to the open.

4) The vessels and outgoing pipes permanently filled with carbon dioxide are to have thermal insulation preventing the operation of the safety valve for 24 hours after de-energising the plant, at ambient temperature of 45°C and an initial pressure equal to the starting pressure of the refrigeration unit. The insulating materials and their liners are to be to the satisfaction of the Society, bearing in mind, in particular, their fire resistance and mechanical properties, as well as protection against penetration of water vapours.

c) Refrigerating plant

1) The vessels are to be serviced by two automated completely independent refrigerating units solely intended for this purpose, each comprising a compressor and the associated prime mover, evaporator and condenser.

2) The refrigerating plant is to comply with the relevant requirements of Ch 1, Sec 9. The refrigerating capacity and the automatic control of each unit are to be such as to maintain the required temperature under conditions of continuous operation for 24 hours at a sea temperature up to 32°C and ambient air temperature up to 45°C.

3) In the event of failure of either one of the refrigerating units, the other is to be actuated automatically. Provision is to be made for local manual control of the refrigerating plant.

4) Each electrical refrigerating unit is to be supplied from the main switchboard busbars by a separate feeder.

5) The cooling water supply to the refrigerating plant (where required) is to be provided from at least two circulating pumps, one of which being used as a standby. The standby pump may be a pump used for other services so long as its use for cooling would not interfere with any other essential service of the ship. Cooling water is to be taken from not less than two sea connections, preferably one port and one starboard.

d) Pipes, valves and associated fittings

1) The pipes, valves and fittings are to be in accordance with the requirements of Ch 1, Sec 7 for a design pressure not less than the design pressure of the CO_2 vessels.

2) Safety relief devices are to be provided in each section of pipe that may be isolated by block valves and in which there could be a build up of pressure in excess of the design pressure of any of the components.

3) The piping system is to be designed in such a way that the CO_2 pressure at the nozzles should not be less than 1 MPa.

e) Control of fire-extinguishing system operation

The machinery alarm system is to be equipped with audible and visual alarms activated when:

1) the pressure in the vessels reaches the low and the high values according to item b) 2) above

2) any one of the refrigerating units fails to operate

3) the lowest permissible level of the liquid in the vessels is reached.

f) Release control

1) The release of CO_2 is to be initiated manually.

2) If a device is provided which automatically regulates the discharge of the rated quantity of carbon dioxide into the protected spaces, it is also to be possible to regulate the discharge manually.

3) If the system serves more than one space, means for control of discharge quantities of CO_2 are to be provided, e.g. automatic timer or accurate level indicators located at the control positions or positions.

g) Testing

1) The pipes, valves and fittings and assembled system are to be tested to the satisfaction of the Society.

2) The pipes from the vessels to the release valves on the distribution manifold are to be subjected to a pressure test to not less than 1,5 times the set pressure of the safety relief valves.

3) The pipes from the release valves on the distribution manifold to the nozzles are to be tested for tightness and free flow of CO_2, after having been assembled on board.

4) After having been fitted on board, the refrigerating plant is to be checked for its proper operation.

5) If deemed necessary by the Society, a discharge test may be required to check the fulfilment of the requirements of item d) 3) above.

4.2 Equivalent fixed gas fire-extinguishing systems

4.2.1 Fixed gas fire-extinguishing systems equivalent to those specified in [4.1] are to be of a type approved by the Society.

4.3 Requirements of steam systems

4.3.1 The boiler or boilers available for supplying steam are to have an evaporation of at least 1 kg of steam per hour for each 0,75 m^3 of the gross volume of the largest space so protected. In addition to complying with the foregoing requirements, the systems in all respects are to be as determined by, and to the satisfaction of, the Society.

5 Fixed foam fire-extinguishing systems

5.1 General

5.1.1 Application

The Article [5] details the specifications for fixed foam fire-extinguishing systems for:

- the protection of machinery spaces in accordance with Ch 4, Sec 6, [5]
- cargo pump-rooms in accordance with Pt D, Ch 1, Sec 17, [7.4].

5.1.2 Definition

a) Design filling rate is at least the minimum nominal filling rate used during the approval tests.

b) Foam is the extinguishing medium produced when foam solution passes through a foam generator and is mixed with air.

c) Foam solution is a solution of foam concentrate and water.

d) Foam concentrate is a liquid which, when mixed with water in the appropriate concentration forms a foam solution.

e) Foam delivery ducts are supply ducts for introducing high-expansion foam into the protected space from foam generators located outside the protected space.

f) Foam mixing ratio is the percentage of foam concentrate mixed with water forming the foam solution.

g) Foam generators are discharge devices or assemblies through which high-expansion foam solution is aerated to form foam that is discharged into the protected space. Foam generators using inside air typically consist of a nozzle or set of nozzles and a casing. The casing is typically made of perforated steel/stainless steel plates shaped into a box that enclose the nozzle(s). Foam generators using outside air typically consist of nozzles enclosed within a casing that spray onto a screen. An electric, hydraulic or pneumatically driven fan is provided to aerate the solution.

h) High-expansion foam fire-extinguishing systems are fixed total flooding extinguishing systems that use either inside air or outside air for aeration of the foam solution. A high-expansion foam system consists of both the foam generators and the dedicated foam concentrate approved during the fire testing specified in [5.2.1], item c).

i) Inside air foam system is a fixed high-expansion foam fire-extinguishing system with foam generators located inside the protected space and drawing air from that space.

j) Nominal flow rate is the foam solution flow rate expressed in l/min.

k) Nominal application rate is the nominal flow rate per area expressed in l/min/m^2.

l) Nominal foam expansion ratio is the ratio of the volume of foam to the volume of foam solution from which it was made, under non-fire conditions, and at an ambient temperature of e.g. around 20ºC.

m) Nominal foam production is the volume of foam produced per time unit, i.e. nominal flow rate times nominal foam expansion ratio, expressed in m^3/min.

n) Nominal filling rate is the ratio of nominal foam production to the area, i.e. expressed in m/min.

o) Nominal filling time is the ratio of the height of the protected space to the nominal filling rate, i.e. expressed in minutes.

p) Outside air foam system is a fixed high-expansion foam system with foam generators installed outside the protected space that are directly supplied with fresh air.

5.2 Fixed high-expansion foam fire-extinguishing systems

5.2.1 Principal performance

a) The system shall be capable of manual release, and shall be designed to produce foam at the required application rate within 1 minute of release. Automatic release of the system shall not be permitted unless appropriate operational measures or interlocks are provided to prevent any local application systems required by Ch 4, Sec 6, [5.6], from interfering with the effectiveness of the system.

b) The foam concentrates shall be approved by the Society based on the guidelines developed by the Organization. Different foam concentrate types shall not be mixed in a high-expansion foam system.

c) The system shall be capable of fire extinction and manufactured and tested to the satisfaction of the Society based on the guidelines developed by the Organization.

d) The system and its components shall be suitably designed to withstand ambient temperature changes, vibration, humidity, shock, clogging and corrosion normally encountered on units. Piping, fittings and related components inside the protected spaces (except gaskets) shall be designed to withstand 925°C.

e) System piping, foam concentrate storage tanks, components and pipe fittings in contact with the foam concentrate shall be compatible with the foam concentrate and be constructed of corrosion resistant materials such as stainless steel, or equivalent. Other system piping and foam generators shall be full galvanized steel or equivalent. Distribution pipework shall have self-draining capability.

f) Means for testing the operation of the system and assuring the required pressure and flow shall be provided by pressure gauges at both inlets (water and foam concentrate supply) and at the outlet of the foam proportioner. A test valve shall be installed on the distribution piping downstream of the foam proportioner, along with orifices which reflect the calculated pressure drop of the system. All sections of piping shall be provided with connections for flushing, draining and purging with air. All nozzles shall be able to be removed for inspection in order to prove clear of debris.

g) Means shall be provided for the crew to safely check the quantity of foam concentrate and take periodic control samples for foam quality.

h) Operating instructions for the system shall be displayed at each operating position.

i) Spare parts shall be provided based on the manufacturer's instruction.

j) If an internal combustion engine is used as a prime mover for the seawater pump for the system, the fuel oil tank to the prime mover shall contain sufficient fuel to enable the pump to run on full load for at least 3 h and sufficient reserves of fuel shall be available outside the machinery space of category A to enable the pump to be run on full load for an additional 15 h. If the fuel tank serves other internal combustion engines simultaneously, the total fuel tank capacity shall be adequate for all connected engines.

k) The arrangement of foam generators and piping in the protected space shall not interfere with access to the installed machinery for routine maintenance activities.

l) The system source of power supply, foam concentrate supply and means of controlling the system shall be readily accessible and simple to operate, and shall be arranged at positions outside the protected space not likely to be cut off by a fire in the protected space. All electrical components directly connected to the foam generators shall have at least an IP 54 rating.

m) The piping system shall be sized in accordance with a hydraulic calculation technique to ensure availability of flows and pressures required for correct performance of the system.

Note 1: Where the Hazen-Williams method is used, the values of the friction factor C given in Tab 3 for different pipe types which may be considered should apply.

Table 3 : Friction factor C

Pipe type	C
Black or galvanized mild steel	100
Copper or copper alloys	150
Stainless steel	150

n) The arrangement of the protected spaces shall be such that they may be ventilated as the space is being filled with foam. Procedures shall be provided to ensure that upper level dampers, doors and other suitable openings are kept open in case of a fire. For inside air foam systems, spaces below 500 m^3 need not comply with this requirement.

o) Onboard procedures shall be established to require personnel re-entering the protected space after a system discharge to wear breathing apparatus to protect them from oxygen deficient air and products of combustion entrained in the foam blanket.

p) Installation plans and operating manuals shall be supplied to the ship and be readily available on board. A list or plan shall be displayed showing spaces covered and the location of the zone in respect of each section. Instructions for testing and maintenance shall be available on board.

q) All installation, operation and maintenance instructions/plans for the system shall be in the working language of the ship. If the working language of the ship is not English, French, nor Spanish, a translation into one of these languages shall be included.

r) The foam generator room shall be ventilated to protect against overpressure, and shall be heated to avoid the possibility of freezing.

s) The quantity of foam concentrate available shall be sufficient to produce a volume of foam equal to at least five times the volume of the largest protected space enclosed by steel bulkheads, at the nominal expansion ratio, or enough for 30 min of full operation for the largest protected space, whichever is greater.

t) Machinery spaces and cargo pump-rooms shall be provided with audible and visual alarms within the protected space warning of the release of the system. The alarms shall operate for the length of time needed to evacuate the space, but in no case less than 20 s.

5.2.2 Inside air foam systems

a) Systems for the protection of machinery spaces and cargo pump-rooms

1) The system is to be supplied by both main and emergency sources of power. The emergency power supply shall be provided from outside the protected space.

2) Sufficient foam-generating capacity is to be provided to ensure the minimum design filling rate for the system is met and in addition shall be adequate to completely fill the largest protected space within 10 min.

Where such a machinery space includes a casing (e.g. an engine casing in a machinery space of category A containing internal combustion machinery, and/or a boiler), the volume of such casing, above the level up to which foam shall be filled to protect the highest position of the fire risk objects within the machinery space, need not be included in the volume of the protected space.

The level up to which foam shall be filled to protect the highest positioned fire risk objects within the machinery space shall not be less than whichever is higher between 1 m above the highest point of any such object; and the lowest part of the casing.

Where such a machinery space does not include a casing, the volume of the largest protected space shall be that of the space in its entirety, irrespective of the location of any fire risk object therein.

Fire risk objects include, but may not be limited to, those listed in Ch 4, Sec 1, [3.2.1], although not referred to in this requirement, they may also include items having a similar fire risk such as exhaust gas boilers or oil fuel tanks.

3) The arrangement of foam generators shall in general be designed based on the approval test results. A minimum of two generators shall be installed in every space containing combustion engines, boilers, purifiers, and similar equipment. Small workshops and similar spaces may be covered with only one foam generator.

4) Foam generators is to be uniformly distributed under the uppermost ceiling in the protected spaces including the engine casing. The number and location of foam generators is to be adequate to ensure all high risk areas are protected in all parts and at all levels of the spaces. Extra foam generators may be required in obstructed locations. The foam generators is to be arranged with at least 1 m free space in front of the foam outlets, unless tested with less clearance. The generators is to be located behind main structures, and above and away from engines and boilers in positions where damage from an explosion is unlikely.

5.2.3 Outside air foam systems

a) Systems for the protection of machinery spaces and cargo pump-rooms

1) The system shall be supplied by both main and emergency sources of power. The emergency power supply shall be provided from outside the protected machinery space.

2) Sufficient foam-generating capacity shall be provided to ensure the minimum design filling rate for the system is met and in addition shall be adequate to completely fill the largest protected space within 10 min.

3) The arrangement of foam delivery ducts shall in general be designed based on the approval test results. The number of ducts may be different, but the minimum design filling rate determined during approval testing shall be provided by the system. A minimum of two ducts shall be installed in every space containing combustion engines, boilers, purifiers, and similar equipment. Small workshops and similar spaces may be covered with only one duct.

4) Foam delivery ducts shall be uniformly distributed under the uppermost ceiling in the protected spaces including the engine casing. The number and location of ducts shall be adequate to ensure all high risk areas are protected in all parts and at all levels of the spaces. Extra ducts may be required in obstructed locations. The ducts shall be arranged with at least 1 m free space in front of the foam delivery ducts, unless tested with less clearance. The ducts shall be located behind main structures, and above and away from engines and boilers in positions where damage from an explosion is unlikely.

5) The arrangement of the foam delivery ducts shall be such that a fire in the protected space will not affect the foam-generating equipment. If the foam generators are located adjacent to the protected space, foam delivery ducts shall be installed to allow at least 450 mm of separation between the generators and the protected space, and the separating divisions shall be class "A-60" rated. Foam delivery ducts shall be constructed of steel having a thickness of not less than 5 mm. In addition, stainless steel dampers (single or multi-bladed) with a thickness of not less than 3 mm shall be installed at the openings in the boundary bulkheads or decks between the foam generators and the protected space. The dampers shall be automatically operated (electrically, pneumatically or hydraulically) by means of remote control of the foam generator related to them, and arranged to remain closed until the foam generators begin operating.

6) The foam generators is to be located where an adequate fresh air supply can be arranged.

5.2.4 Installation testing requirements

a) After installation, the pipes, valves, fittings and assembled systems shall be tested to the satisfaction of the Society, including functional testing of the power and control systems, water pumps, foam pumps, valves, remote and local release stations and alarms. Flow at the required pressure shall be verified for the system using orifices fitted to the test line. In addition, all distribution piping shall be flushed with freshwater and blown through with air to ensure that the piping is free of obstructions.

b) Functional tests of all foam proportioners or other foam mixing devices shall be carried out to confirm that the mixing ratio tolerance is within +30 to -0% of the nominal mixing ratio defined by the system approval. For foam proportioners using foam concentrates of Newtonian type with kinematic viscosity equal to or less than 100 cSt at 0ºC and density equal to or less than 1,100 kg/m3, this test can be performed with water instead of foam concentrate. Other arrangements shall be tested with the actual foam concentrate.

5.2.5 Systems using outside air with generators installed inside the protected space

Systems using outside air but with generators located inside the protected space and supplied by fresh air ducts may be accepted by the Society provided that these systems have been shown to have performance and reliability equivalent to systems defined in [5.2.3]. For acceptance, the Society should consider the following minimum design features:

- lower and upper acceptable air pressure and flow rate in supply ducts;
- function and reliability of damper arrangements;
- arrangements and distribution of air delivery ducts including foam outlets; and
- separation of air delivery ducts from the protected space.

5.3 Fixed low-expansion foam fire-extinguishing systems

5.3.1 Quantity and foam concentrates

a) The foam concentrates of low-expansion foam fire-extinguishing systems is to be approved by the Society based on the guidelines adopted by IMO (MSC. Circ.1312). Different foam concentrate types shall not be mixed in a low-expansion foam system. Foam concentrates of the same type from different manufacturers shall not be mixed unless they are approved for compatibility.

b) The system is to be capable of discharging through fixed discharge outlets, in no more than 5 min, a quantity of foam sufficient to produce an effective foam blanket over the largest single area over which oil fuel is liable to spread.

5.3.2 Installation requirements

a) Means is to be provided for effective distribution of the foam through a permanent system of piping and control valves or cocks to suitable discharge outlets, and for the foam to be effectively directed by fixed sprayers onto other main fire hazards in the protected space. The means for effective distribution of the foam is to be proven acceptable to the Society through calculation or by testing.

b) The means of control of any such systems is to be readily accessible and simple to operate and shall be grouped together in as few locations as possible at positions not likely to be cut off by a fire in the protected space.

6 Fixed pressure water-spraying and water-mist fire-extinguishing systems

6.1 Engineering specifications

6.1.1 Fixed pressure water-spraying fire-extinguishing systems

a) Nozzles and pumps

1) Any required fixed pressure water-spraying fire-extinguishing system in machinery spaces is to be provided with type approved spraying nozzles.

2) The number and arrangement of the nozzles of any required fixed pressure water-spraying fire-extinguishing system in machinery spaces are to be to the satisfaction of the Society and are to be such as to ensure an effective average distribution of water of at least 5 l/m^2/minute in the spaces to be protected. Where increased application rates are considered necessary, these are to be to the satisfaction of the Society.

3) Precautions shall be taken to prevent the nozzles from becoming clogged by impurities in the water or corrosion of piping, nozzles, valves and pump.

4) In machinery spaces, the pump shall be capable of simultaneously supplying at the necessary pressure all sections of the system in any one compartment to be protected.

5) The pump may be driven by independent internal combustion machinery, but, if it is dependent upon power being supplied from the emergency generator fitted in compliance with the provisions of Ch 1, Sec 2 or Part C, Chapter 2, as appropriate, the generator shall be so arranged as to start automatically in case of main power failure so that power for the pump required by item 4) above is immediately available. The independent internal combustion machinery for driving the pump shall be so situated that a fire in the protected space or spaces will not affect the air supply to the machinery.

b) Installation requirements

1) The system may be divided into sections, the distribution valves of which are to be operated from easily accessible positions outside the spaces to be protected so as not to be readily cut off by a fire in the protected space.

2) The pump and its controls are to be installed outside the space or spaces to be protected. It shall not be possible for a fire in the space or spaces protected by the water-spraying system to put the system out of action.

c) System control requirements

The system is to be kept charged at the necessary pressure and the pump supplying the water for the system is to be put automatically into action by a pressure drop in the system.

d) Installation requirements for machinery spaces

Nozzles are to be fitted above bilges, tank tops and other areas over which oil fuel is liable to spread and also above other specific fire hazards in the machinery spaces.

6.1.2 Equivalent water-mist fire-extinguishing systems

Water-mist fire-extinguishing systems for machinery spaces and cargo pump rooms are to be approved by the Society.

6.2 Particular requirements for wellhead, production and drilling areas

6.2.1 The system is to be such as to provide a water application of at least 12 l/m^2/min and the entire area limited by the extremities of the unit, A or H class vertical division or both.

6.3 Fixed water-based local application fire-fighting systems

6.3.1 Fixed water-based local application fire-fighting systems are to be approved by the Society based on IMO Circular MSC.1/Circ.1387 as corrected by MSC.1/Circ.1387/Corr.1.

7 Automatic sprinkler, fire detection and fire alarm systems

7.1 Engineering specifications

7.1.1 General

a) Type of sprinkler systems

Where required, the automatic sprinkler systems are to be of the wet pipe type, but small exposed sections may be of the dry pipe type where, in the opinion of the Society, this is a necessary precaution.

b) Automatic sprinkler systems equivalent to those specified in [7.1.2] to [7.1.4] are to be approved by the Society.

7.1.2 Sources of power supply

There are to be not less than two sources of power supply for the sea water pump and automatic alarm and detection system. If the pump is electrically driven, it shall be connected to the main source of electrical power, which shall be capable of being supplied by at least two generators. The feeders are to be so arranged as to avoid galleys, machinery spaces and other enclosed spaces of high fire risk except in so far as it is necessary to reach the appropriate switchboards. One of the sources of power supply for the alarm and detection system shall be an emergency source. Where one of the sources of power for the pump is an internal combustion engine, it shall, in addition to complying with the provisions of [7.1.4], item c), be so situated that a fire in any protected space will not affect the air supply to the machinery.

7.1.3 Component requirements

a) Sprinklers

1) The sprinklers shall be resistant to corrosion by the marine atmosphere. In accommodation and service spaces the sprinklers shall come into operation within the temperature range from 68°C to 79°C, except that in locations such as drying rooms, where high ambient temperatures might be expected, the operating temperature may be increased by not more than 30°C above the maximum deckhead temperature.

b) Pressure tanks

1) A pressure tank having a volume equal to at least twice that of the charge of water specified in this item is to be provided. The tank is to contain a standing charge of fresh water, equivalent to the amount of water which would be discharged in one minute by the pump referred to in item c) 2) below, and the arrangements are to be provided for maintaining an air pressure in the tank such as to ensure that where the standing charge of fresh water in the tank has been used the pressure will be not less than the working pressure of the sprinkler, plus the pressure exerted by a head of water measured from the bottom of the tank to the highest sprinkler in the system. Suitable means of replenishing the air under pressure and of replenishing the fresh water charge in the tank are to be provided. A glass gauge is to be provided to indicate the correct level of the water in the tank.

The tank is to be designed and built in compliance with the requirements for pressure vessels given in Ch 1, Sec 3.

2) Means are to be provided to prevent the passage of sea water into the tank.

c) Sprinkler pumps

1) An independent power pump shall be provided solely for the purpose of continuing automatically the discharge of water from the sprinklers. The pump shall be brought into action automatically by the pressure drop in the system before the standing fresh water charge in the pressure tank is completely exhausted.

2) The pump and the piping system are to be capable of maintaining the necessary pressure at the level of the highest sprinkler to ensure a continuous output of water sufficient for the simultaneous coverage of a minimum area of 280 m^2 at the application rate specified in [7.1.4], item d). The hydraulic capability of the system is to be confirmed by the review of hydraulic calculations, followed by a test of the system, if deemed necessary by the Society.

3) The pump is to have fitted on the delivery side a test valve with a short open-ended discharge pipe. The effective area through the valve and pipe is to be adequate to permit the release of the required pump output while maintaining the pressure in the system specified in item b) 1) above.

7.1.4 Installation requirements

a) General

- Any parts of the system which may be subjected to freezing temperatures in service are to be suitably protected against freezing.
- Means are to be provided for testing the automatic operation of the pumps on a reduction of pressure in the system.

b) Piping arrangements

1) Sprinklers are to be grouped into separate sections, each of which is to contain not more than 200 sprinklers. In accommodation units, any section of sprinklers is not to serve more than two decks. However, the Society may permit such a section of sprinklers to serve more than two decks, if it is satisfied that the protection of the unit against fire will not thereby be reduced.

2) Each section of sprinklers is to be capable of being isolated by one stop-valve only. The stop-valve in each section is to be readily accessible in a location outside of the associated section or in cabinets within stairway enclosures. The valve's location is to be clearly and permanently indicated. Means are to be provided to prevent the operation of the stop-valves by any unauthorized person.

3) A test valve is to be provided for testing the automatic alarm for each section of sprinklers by a discharge of water equivalent to the operation of one sprinkler. The test valve for each section is to be situated near the stop-valve for that section.

4) The sprinkler system is to have a connection from the unit's fire main by way of a lockable screw-down non-return valve which is to prevent a backflow from the sprinkler system to the fire main.

   The automatic sprinkler fire detection and fire alarm system are to be an independent unit and therefore no other piping system is to be connected to it, except for the following:

   - connections for feeding the system from shoreside sources, fitted with adjacent stop valves and non-return valves
   - connection from the fire main as required above.

   The valves on the shore filling connection and on the fire main connection are to be fitted with clear and permanent labels indicating their service. These valves are to be capable of being locked in the "closed" position.

5) A gauge indicating the pressure in the system is to be provided at each section stop-valve and at a central station.

6) The sea inlet to the pump is to be, wherever possible, in the space containing the pump and is to be so arranged that when the unit is afloat it will not be necessary to shut off the supply of sea water to the pump for any purpose other than the inspection or repair of the pump.

c) Location of systems

The sprinkler pump and tank are to be situated in a position reasonably remote from any machinery space of category A and are not to be situated in any space required to be protected by the sprinkler system.

d) Sprinkler position

Sprinklers are to be placed in an overhead position and spaced in a suitable pattern to maintain an average application rate of not less than 5 l/m^2/minute over the nominal area covered by the sprinklers. For this purpose, nominal area shall be taken as the gross horizontal projection of the area to be covered. However, the Society may permit the use of sprinklers providing such an alternative amount of water suitably distributed as has been shown, to the satisfaction of the Society, to be not less effective.

7.1.5 System control requirements

a) Ready availability

1) Any required automatic sprinkler, fire detection and fire alarm system are to be capable of immediate operation at all times and no action by the crew shall be necessary to set it in operation.

2) The automatic sprinkler system is to be kept charged at the necessary pressure and is to have provision for a continuous supply of water as required in this Section.

b) Alarm and indication

1) Each section of sprinklers is to include means for giving a visual and audible alarm signal automatically at one or more indicating units whenever any sprinkler comes into operation. Such alarm systems are to be such as to indicate if any fault occurs in the system.

   - In accommodation units, means required above are to give an indication of any fire and its location in any space served by the system and are to be centralised on the central control room or in the main fire control station, which is to be so manned or equipped as to ensure that any alarm from the system is immediately received by a responsible member of the crew.
   - In mobile units other than accommodation units, means required above are to indicate in which section served by the system a fire has occurred. They are to be centralised on the central control room and in addition, visible and audible alarms are to be given in a position other than on the central control room, so as to ensure that the indication of fire is immediately received by the crew.

- In fixed platforms, means required above are to give an indication of any fire and its location in any space served by the system and are to be centralised in the main fire control station, which is to be so manned or equipped as to ensure that any alarm from the system is immediately received by a responsible member of the crew.

2) Switches are to be provided at one of the indicating positions referred to in the previous item 1) which will enable the alarm and the indicators for each section of sprinklers to be tested.

3) A list or plan shall be displayed at each indicating unit showing the spaces covered and the location of the zone in respect of each section. Suitable instructions for testing and maintenance shall be available.

c) Testing

Means are to be provided for testing the automatic operation of the pump on reduction of pressure in the system.

8 Fire-fighters' outfits

8.1

8.1.1 At least two fire-fighters' outfits complying with the relevant requirements of the FSS Code should be provided, each with portable instruments for measuring oxygen and flammable vapour concentrations acceptable to the Administration.

8.1.2 Two spare charges should be provided for each required breathing apparatus. Units that are equipped with suitably located means for fully recharging the air cylinders free from contamination need carry only one spare charge for each required apparatus.

8.1.3 The fire-fighters' outfits should be kept ready for use in an easily accessible location that is permanently and clearly marked. They should be stored in two or more widely separated locations.

9 Recharging of air cylinders

9.1

9.1.1 The apparatus for recharging air cylinders, if provided, should have its power supplied from the emergency supply or be independently diesel-powered, or be so constructed or equipped that the air cylinders may be used immediately after recharging.

9.1.2 The apparatus should be suitably located in a sheltered space above main deck level on the unit.

9.1.3 Intakes for air compressors should draw from a source of clean air.

9.1.4 The air should be filtered after compression to eliminate compressor oil contamination.

9.1.5 The recharging capacity should meet the requirements of SOLAS regulation II-2/10.10.2.6.

9.1.6 The equipment and its installation should be to the satisfaction of the Society.

Section 12 Additional Class Notation LSA

1 General

1.1 Definitions

1.1.1 International Life-Saving Appliance (LSA) Code (referred to as “the LSA Code” in the present Section) means the International Life-Saving Appliance (LSA) Code adopted by the Maritime Safety Committee of the IMO by Resolution MSC.48(66).

1.2 Classification requirements

1.2.1 It is reminded that life-saving appliances are outside the scope of classification, except for units and installations intended to be assigned the additional class notation **LSA**.

1.2.2 Units and installations intended to be assigned the additional class notation **LSA** are to fulfil the requirements of the present Section.

1.2.3 In addition, units and installations intended to receive the additional class notation **LSA** are to comply with additional requirements given by the applicable Rules for Classification according to their service notation and structural type notation.

1.3 National Authorities requirements

1.3.1 It is to be noted that, in all cases, the actual arrangement of life-saving appliances provided on board is always to be approved by National authorities, even if requirements of the present Section are complied with; it is the responsibility of the Owner or Operator to obtain this approval.

1.3.2 National Rules and Regulations always take precedence upon corresponding provisions of the present Section.

1.3.3 Alleviations from requirements of the present Section may be considered, if judged acceptable by the Society, in case of approval by National Authorities of less stringent arrangements than those provided for by these requirements.

1.4 Approval of appliances and equipment

1.4.1 Where the words "of an approved type" are indicated, the equipment is to meet the requirements of the IMO LSA Code and IMO Resolution MSC.81(70), as amended by Resolutions MSC.200(80), MSC.226(82), MSC.274(85), MSC.295(87), MSC.321(89), MSC.323(89), MSC.378(93) and MSC.472(101), and is to be approved by the Society. Existing type approval or certification (e.g. Directive 2014/90/EU) may be considered by the Society. Other recognized references covering design and testing found acceptable by the Society may be used for approval.

1.4.2 Unless expressly provided otherwise in this section, all life-saving appliances are to comply with the applicable requirements of the IMO LSA Code and MSC.81(70), as amended by Resolutions MSC.200(80), MSC.226(82), MSC.274(85), MSC.295(87), MSC.321(89), MSC.323(89), MSC.378(93) and MSC.472(101).

1.4.3 New and novel life-saving appliances should meet the applicable provisions of SOLAS chapter III, including those for servicing and maintenance.

1.4.4 All life-saving appliances should comply with the applicable SOLAS regulations.

1.4.5 All lifeboats should be fire-protected in accordance with the LSA Code.

1.5 Alternative design and arrangements

1.5.1 When alternative design or arrangements deviate from the prescriptive provisions of the present Section, an engineering analysis, evaluation and approval of the design and arrangements should be carried out in accordance with SOLAS regulation III/38.

Note 1: Refer to IMO Circular MSC.1/Circ.1212 “Guidelines on alternative design and arrangements for SOLAS chapters II-1 and III”.

2 Survival crafts

2.1 Surface units

2.1.1 Each unit is to carry, on each side of the unit, one or more lifeboats of an approved type, complying with the requirements of the LSA Code, of such aggregate capacity as will accommodate the total number of persons on board. Alternatively, the Society may accept one or more free-fall lifeboats of an approved type, complying with the requirements of section 4.7 of the LSA Code, capable of being free-fall launched over the end of the unit of such aggregate capacity as will accommodate the total number of persons on board.

2.1.2 In addition to lifeboats prescribed in [2.1.1], liferafts of an approved type for the actual operating height, capable of being launched on either side of the unit are to be provided in sufficient number and size to accommodate all persons on board of the unit.

If the liferafts cannot be readily transferred for launching on either side of the unit, the total capacity available on each side is to be sufficient to accommodate all persons on board.

2.1.3 Where the survival crafts are stowed in a position which is more than 100 m from the stem or stern, each unit should carry in addition to the liferafts as provided in [2.1.2], a liferaft stowed as far forward or aft, or one as far forward and another as far aft, as is reasonable and practicable. Notwithstanding item f) of [2.3.3], such liferaft or liferafts may be securely fastened so as to permit manual release.

2.1.4 In any case, even in case of a very small number of persons on board, a minimum number of one lifeboat plus one liferaft, or two lifeboats are to be provided.

2.2 Other units or installations

2.2.1 Each unit or installation is to carry self-propelled lifeboats of an approved type, installed in at least two widely separate locations on different sides or ends. The arrangement of the lifeboats is to provide sufficient capacity to accommodate all persons on board (1,5 times for accommodation units) if:

- all the lifeboats in any one location are lost or rendered unusable, or
- all the lifeboats on any one side, any one end or any one corner of the unit or installation are lost or rendered unusable.

Note 1: In case of use of free fall launching systems, this requirement may be alleviated, subject to special examination by the Society.

2.2.2 In addition to lifeboats prescribed in [2.2.1], liferafts of an approved type for the actual operating height, are to be provided in sufficient number and size to accommodate all persons on board (1,5 times for accommodation units or installations).

2.2.3 In the case of a self-elevating unit where, due to its size or configuration, lifeboats cannot be located in widely separated locations to satisfy [2.2.1], the Society may permit the aggregate capacity of the lifeboats to accommodate only the total number of persons on board. However, the liferafts required in [2.2.2] should be served by launching appliances or marine evacuation system complying with the requirements of the LSA Code.

2.3 Survival craft stowage, launching stations, launching and recovery arrangements

2.3.1 Survival craft assembly and embarkation arrangements

a) Davit-launched survival craft assembly and embarkation stations should be so arranged as to enable stretcher cases to be placed in survival craft.

b) Survival craft embarkation arrangements should be so designed that:

   1) lifeboats can be boarded and launched directly from the stowed position

   2) davit-launched liferafts can be boarded and launched from a position immediately adjacent to the stowed position or from a position to which the liferaft is transferred prior to launching in compliance with item e) of [2.3.3], and

   3) where necessary, means should be provided for bringing the davit-launched liferaft against the unit's side and holding it alongside so that persons can be safely embarked.

2.3.2 Stowage craft launching stations

Launching stations should be in such positions as to ensure safe launching having particular regard to clearance from any exposed propeller or steeply overhanging portions of the hull. As far as possible, launching stations should be located so that survival craft can be launched down a straight side of the unit, except for:

a) survival craft specially designed for free-fall launching; and

b) survival craft mounted on structures intended to provide clearance from lower structures.

2.3.3 Stowage of survival craft

a) Each survival craft should be stowed:

1) so that neither the survival craft nor its stowage arrangement will interfere with the operation of any other survival craft or rescue boat at any other launching station

2) as near the water surface as is safe and practicable

3) in a state of continuous readiness, so that two crew members can carry out preparations for embarkation and launching in less than 5 min.

4) fully equipped as required by the LSA Code; however, in the case of units operating in areas such that, in the opinion of the Society, certain items of equipment are unnecessary, the Society may allow these items to be dispensed with

5) as far as practicable, in a secure and sheltered position and protected from damage by fire and explosion.

b) A survival craft or davit-launched liferaft should be so positioned that the survival craft or raft is upon embarkation at least 2 m above the waterline when the unit is in the limiting damaged condition determined in accordance with Part B, Chapter 1

c) Where appropriate, the unit should be so arranged that lifeboats, in their stowed positions, are protected from damage by heavy seas.

d) Lifeboats should be stowed attached to launching appliances.

e) Liferafts should be stowed as to permit manual release of one raft or container at a time from their securing arrangements.

f) Davit-launched liferafts should be stowed within reach of the lifting hooks, unless some means of transfer is provided which is not rendered inoperable within the limits of trim and list prescribed in Part B, Chapter 1 for any damaged condition or by unit motion or power failure.

g) Every liferaft other than those mentioned in [2.1.2] should be stowed with the weak link of its painter permanently attached to the unit and with a float-free arrangement complying with the requirements of paragraph 4.1.6 of the LSA Code so that the liferaft floats free of any structure and, if inflatable, inflates automatically when the unit sinks.

2.3.4 Survival craft launching and recovery arrangements

a) Launching appliances complying with the requirements of the LSA Code, as applicable, should be provided for all lifeboats and davit-launched liferafts.

b) Automatic launching and inflating devices are to be provided for inflatable liferafts.

c) Launching and recovery arrangements should be such that the appliance operator on the unit is able to observe the survival craft at all times during launching and lifeboats during recovery.

d) In the case of floating units, launching of lifeboats and rigid liferafts is to be possible by one single man from their board, even when the unit is in its most severe damage condition.

e) Only one type of release mechanism should be used for similar survival craft carried on board the unit.

f) Preparation and handling of survival craft at any one launching station should not interfere with the prompt preparation and handling of any other survival craft or rescue boat at any other station.

g) Falls, where used, should be long enough for the survival craft to reach the water with the unit under unfavourable conditions, such as maximum air-gap, lightest transit or operational condition or any damaged condition, as described in Part B, Chapter 1.

h) During preparation and launching, the survival craft, its launching appliance and the area of water into which it is to be launched, should be adequately illuminated by emergency lighting.

i) Means should be available to prevent any discharge of fluids on to survival craft during abandonment.

j) All lifeboats required for abandonment by the total number of persons permitted on board, should be capable of being launched with their full complement of persons and equipment within 10 min. from the time the signal to abandon the unit is given.

k) Manual brakes should be so arranged that the brake is always applied unless the operator, or a mechanism activated by the operator, holds the brake control in the “off” position.

l) Each survival craft should be so arranged as to clear each leg, column, footing, brace, mat and each similar structure below the hull of a self-elevating unit and below the upper hull of a column-stabilized unit with the unit in an intact condition. The Society may allow a reduction in the total number of survival craft meeting the requirement when the unit is in the transit mode and the number of personnel on board has been reduced. In such cases, sufficient survival craft to meet the requirements of this Section should be available for use by those personnel remaining on board.

m) In any case of damage specified in Part B, Chapter 1, lifeboats with an aggregate capacity of not less than 100% of persons on board should, in addition to meeting all other requirements of launching and stowage contained in this Section, be capable of being launched clear of any obstruction.

n) Consideration should be given to the location and orientation of the survival craft with reference to unit design such that clearance of the unit is achieved in an efficient and safe manner having due regard to the capabilities of the survival craft.

o) Notwithstanding the requirements of paragraph 6.1.2.8 of the LSA Code, the speed of lowering need not be greater than 1 m/s.

2.3.5 Arrangements for remotely located survival craft

a) Liferafts required by [2.1.3] are to be regarded as "remotely located survival craft" with regard to [6.1.1].

b) The area where these remotely located survival craft are stowed shall be provided with:

1) a minimum number of 2 lifejackets and 2 immersion suits

2) adequate means of illumination complying with [2.3.4], either fixed or portable, which shall be capable of illuminating the liferaft stowage position as well as the area of water into which the liferaft should be launched. Portable lights, when used, shall have brackets to permit their positioning on both sides of the vessel

3) an embarkation ladder or other means of embarkation enabling descent to the water in a controlled manner, and

Note 1: Controlled manner: a knotted rope is not acceptable for this purpose.

4) self-contained battery-powered lamps (i.e. luminaires) may be accepted as means of illumination for complying with [2.3.4]. Such lamps shall be capable of being recharged from the ship's main and emergency source of electrical power, and shall be stowed close to the liferaft and embarkation ladder they are intended to serve, under charge. When disconnected from the ship's power, the lamp shall give a minimum duration of 3 hours of undiminished performance. The lamps shall comply with the requirements of the LSA Code. The lamps (i.e. luminaires) should meet the requirements of IP 55. The batteries for the subject lamps should comply with IACS UR E18 requirements irrespective of whether the expiry date is marked by the manufacturer or not.

c) With regard to the distance between the embarkation station and stowage location of the liferaft as required by [2.1.3] (remotely located survival craft), the embarkation station shall be so arranged that the requirements of [2.2.3] can be satisfied.

d) Exceptionally, the embarkation station and stowage position of the liferaft (remotely located survival craft) may be located on different decks provided that the liferaft can be launched from the stowage deck using the attached painter to relocate it to the embarkation ladder positioned on the other deck (traversing a stairway between different decks with the liferaft carried by crew members is not acceptable).

e) Notwithstanding item b), where the exceptional cases mentioned in item d) exist, the following provisions shall be applied:

1) the lifejackets and the immersion suits required by item b) 1) may be stowed at the embarkation station

2) adequate means of illumination complying with item b) 2), shall also illuminate liferaft stowage position, embarkation station and the area of water where the liferaft is to be embarked

3) the embarkation ladder or other means of embarkation as required by item b) 3) may be stowed at the embarkation station

4) notwithstanding the requirements in LSA Code, the painter is to be long enough to reach the relevant embarkation station.

f) The length of the embarkation ladder used to board this liferaft (remotely located survival craft) is calculated by applying an adverse list of 20 degrees, to the loading condition taken from the approved loading manual which gives the lightest draft at the embarkation station.

3 Rescue boat

3.1 General

3.1.1 Each unit should carry at least one rescue boat of an approved type complying with the requirements of the LSA Code. A lifeboat may be accepted as a rescue boat, provided that it and its launching and recovery arrangements also comply with the requirements for a rescue boat.

3.2 Stowage of rescue boats

3.2.1 Rescue boats should be stowed:

a) in a state of continuous readiness for launching in not more than 5 min.

b) if of an inflated type, in a fully inflated condition at all times

c) in a position suitable for launching and recovery

d) so that neither the rescue boats nor their stowage arrangements will interfere with the operation of any survival craft at any other launching station

e) in compliance with [2.3.3], if they are also lifeboats.

3.3 Rescue boat embarkation, launching and recovery arrangements

3.3.1 The rescue boat embarkation and launching arrangements should be such that the rescue boat can be boarded and launched in the shortest possible time.

3.3.2 Launching arrangements should comply with [2.3.4].

3.3.3 Rapid recovery of the rescue boat should be possible when loaded with its full complement of persons and equipment. If the rescue boat is also a lifeboat, rapid recovery should be possible when loaded with its lifeboat equipment and the approved rescue boat complement of at least six persons.

3.3.4 Rescue boat embarkation and recovery arrangements should allow for safe and efficient handling of a stretcher case. Foul weather recovery strops should be provided for safety if heavy fall blocks constitute a danger.

4 Lifebuoys

4.1 Total number

4.1.1 At least eight buoys of an approved type, located as per [6.3], are to be fitted. For surface units of 100 m length or more, this number is to be increased up to the values given in Tab 1.

Table 1 : Lifebuoys

Length of unit (m)	Minimum number of lifebuoys
Under 100	8
100 ≤ L < 150	10
150 ≤ L < 200	12
200 ≤ L	14

4.2 Types

4.2.1 At least one-half of the total number of lifebuoys should be provided with self-igniting lights of an approved electric battery type complying with the requirements of the LSA Code. Not less than two of these should also be provided with self-activating smoke signals complying with the requirements of the LSA Code and be capable of quick release from the central control station, or a location readily available to operating personnel. Lifebuoys with lights and those with lights and smoke signals should be equally distributed on both sides of the unit and should not be the lifebuoys provided with lifelines in compliance with the requirements of [4.2.2].

Lifebuoys fitted with self-igniting lights or self-activating smoke signals should be located outside hazardous areas.

4.2.2 At least two lifebuoys in widely separated locations should each be fitted with a buoyant lifeline, the length of which should be at least one-and-half times the distance from the deck of stowage to the waterline at light draught or 30 m whichever is greater. For self-elevating drilling units, consideration should be taken of the maximum height above the waterline, and for other drilling units the lightest operating condition. The lifeline should be so stowed that it can easily run out.

4.2.3 Each lifebuoy should be marked in block capitals of the Roman alphabet with the name and port of registry of the unit on which it is carried.

5 Lifejackets, immersion suits, visual signals and other life-saving appliances

5.1 Lifejackets

5.1.1 Lifejackets of an approved type are to be provided for at least 1,2 times the number of persons on board.

5.1.2 Each lifejacket should be fitted with a light complying with the requirements of the LSA Code.

5.2 Immersion suits

5.2.1 Immersion suits of an approved type according to the LSA Code are to be provided for at least 1,2 times the number of persons on board. Immersion suits are to be of an appropriate size for each person on board.

5.2.2 In lieu of an immersion suit, an anti-exposure suit complying with the LSA Code, of an appropriate size, should be provided for every person assigned to crew the rescue boat or assigned to a marine evacuation system party.

5.2.3 Immersion suits and anti-exposure suits need not be carried if the unit is constantly in operation in warm climates where, in the opinion of the Flag Authority, they are unnecessary.

5.3 Visual signals

5.3.1 Not less than twelve rocket parachute flares, complying with the requirements of section 3.1 of the LSA Code, are to be carried and stowed on or near the central control room.

5.4 Line-throwing appliances

5.4.1 A line-throwing appliance complying with the requirements of section 7.1 of the LSA Code is to be provided.

6 Distribution of life-saving equipment

6.1 Lifejackets

6.1.1 A sufficient number of lifejackets are to be stowed in suitable locations for those persons who may be on duty in locations where their lifejackets are not readily accessible. In addition, sufficient lifejackets should be available for use at remotely located survival craft positions to the satisfaction of the Society.

6.2 Immersion suits

6.2.1 When required by [5.2], immersion suits are to be distributed the same way as lifejackets (refer to [6.1]).

6.3 Buoys

6.3.1 Buoys provided as per Article [4] are to be located in places where risks of fall outboard are particularly important.

The number and placement of lifebuoys should be such that a lifebuoy is accessible from exposed locations.

6.4 Assembly and embarkation places

6.4.1 If separate, assembly stations are to be provided close to the embarkation stations.

6.4.2 Assembly and embarkation places are to comply with the following requirements:

- easy access of assembly station, or of embarkation place if they are not separated, from accommodation and work areas by two different ways (deck surface, ladders or stairs); access ways are to be chosen in such a way that they are not liable to be both impaired in case of fire or accident
- each assembly station, or embarkation place if they are not separated, should have sufficient space to accommodate all persons assigned to assembly at that station, with at least 0,35 m² per person.

6.4.3 At least two widely separated fixed metal ladders or stairways are to be provided extending from the deck to the surface of the water. The fixed metal ladders or stairways and sea areas in their vicinity are to be adequately illuminated by emergency lighting.

6.4.4 If fixed ladders cannot be installed, alternative means of escape with sufficient capacity to permit all persons on board to descend safely to the waterline should be provided.

7 Radio life-saving appliances

7.1 Two-way VHF radiotelephone apparatus

7.1.1 All lifeboats are to carry a two-way VHF radiotelephone apparatus.

7.1.2 At least three two-way VHF radiotelephone apparatuses are to be available on the unit, so stowed that they can be rapidly placed in any liferaft. All two-way VHF radiotelephone apparatuses are to comply with IMO Resolution A.809(19) as amended by IMO Resolution MSC.149(77).

7.2 Search and rescue locating device

7.2.1 All lifeboats are to carry one radar SART or AIS-SART.

7.2.2 At least two radar SARTs or AIS-SARTs are to be available on the unit, so stowed that they can be rapidly placed in any liferaft. All SARTs or AIS-SARTs are to comply with IMO Resolution A.802(19) as amended by IMO Resolution MSC.247(83) and IMO Resolution MSC.246(83).

8 Operating instructions

8.1

8.1.1 Illustrations and instructions should be provided on or in the vicinity of survival craft and their launching controls and should:

a) illustrate the purpose of controls and the procedures for operating the appliance and give relevant instructions or warnings

b) be easily seen under emergency lighting conditions, and

c) use symbols in accordance with the recommendations of the IMO.

9 Means of escape

9.1 General requirements

9.1.1 Requirements of the present Article are additional to those of Ch 4, Sec 8.

9.1.2 Escape ways on units with production and process plant are to be adequately protected against potential fire loadings emanating from the topside plant and production facilities. The following objectives are to be considered when evaluating the unit's requirements for escape, evacuation and rescue:

- to maintain the safety of all personnel when they move to another location to avoid the effects of a hazardous event
- to provide a refuge on the unit for as long as required to enable a controlled evacuation of the unit
- to facilitate recovery of injured personnel
- to ensure safe abandonment of the unit.

Where sufficient physical barriers do not exist, escape ways are to be protected by way of active (deluge cooling) or passive (fire screen) type systems.

9.2 Exits

9.2.1 Any space in which more than 10 persons are liable to be present at the same time, or space involving particular fire hazards (machinery, galleys, dangerous storage, etc.) is to be provided with two exits at least, located as far as possible one from the other. These exits are to be signalled by lighting posts supplied by the emergency power source.

9.3 Escape routes

9.3.1 Escape routes are to be:

- clearly signalled by lighting posts supplied by the emergency power source
- provided with a lighting supplied by the emergency power source
- with 2 m minimum headroom.

9.3.2 Stairways and corridors used as means of escape are to be not less than 700 mm in clear width and are to have a handrail on one side. Stairways and corridors with a clear width of 1800 mm and over are to have handrails on both sides. Clear width is considered the distance between the handrail and the bulkhead on the other side or between the handrails. The angle of inclination of stairways should be in general 45°, but not greater than 50°, and in machinery spaces and small spaces not more than 60°. Doorways which give access to a stairway are to be of the same size as the stairway.

9.3.3 In addition to the requirements given in [9.3.1], main escape ways from major process and production areas are, in general, to have a minimum clear width of 1000 mm, to enable the safe passage of potentially injured personnel (i.e. stretcher evacuees).

10 Enclosed spaces

10.1

10.1.1 Enclosed spaces of deckhouses and superstructures used for accommodation and/or "temporary refuge" are to be maintained at an overpressure relative to the external area to prevent the potential ingress of smoke and hazardous gases, in the event of a major incident, in hazardous areas.

Part C
Facilities

CHAPTER 5
SUSTAINABILITY

Section 1 General Requirements

1 Scope and application

1.1 Scope

1.1.1 This Chapter applies to units that are designed, built and equipped with a focus on the following sustainability aspects:

- prevention of sea and air pollution
- protection of the marine environment
- reduction of greenhouse gases emissions
- preparation for unit recycling
- enhancement of people well-being on board.

1.1.2 Additional class notations

Units complying with the requirements of this Chapter may be assigned one of the following additional class notations:

- **SUSTAINABILITY-1** when the unit complies with the requirements of Ch 5, Sec 2.
- **SUSTAINABILITY-2** when the unit complies with the requirements of Ch 5, Sec 2 and Ch 5, Sec 3.

2 Definitions and abbreviations

2.1 Definitions related to sea pollution

2.1.1 Advanced Wastewater Treatment (AWT)

Advanced Wastewater Treatment (AWT) means any treatment of wastewater that goes beyond the secondary or biological water treatment stage and may include the removal of nutrients such as phosphorus and nitrogen and a high percentage of suspended solids.

2.1.2 Garbage

Garbage means all kinds of victual, domestic and operational waste excluding fresh fish and parts thereof, generated during the normal operation of the unit and liable to be disposed of continuously or periodically, except those substances which are defined or listed in Annexes I, II, III and IV of MARPOL 73/78.

Garbage includes all kinds of solid wastes like plastics, paper, oily rags, glass, metal, bottles, and incinerator ash. Food wastes are considered as garbage.

2.1.3 Grey water

Grey water includes drainage from dishwashers, showers, sinks, baths and washbasins, laundry and galleys.

2.1.4 Hazardous wastes

Hazardous wastes are those wastes composed of substances which are identified as marine pollutants in the International Maritime Dangerous Goods Code (IMDG Code).

Hazardous wastes include in particular:

- photo processing chemicals
- dry cleaning waste
- used paints
- solvents
- heavy metals
- expired chemicals and pharmaceuticals
- waste from printers
- hydrocarbons and chlorinated hydrocarbons
- used fluorescent and mercury vapour light bulbs
- batteries.

Note 1: Empty packagings previously used for the carriage of hazardous substances are considered as hazardous substances.

2.1.5 No discharge operation

No discharge operation means a condition without discharge of hazardous wastes, treated and untreated wastewater, oily wastes or garbage into the sea and without incineration carried out.

2.1.6 Oil residue (sludge)

Oil residue (sludge) means the residual waste oil products generated during the normal operation of a unit such as those resulting from the purification of fuel or lubricating oil, separated waste oil from oil filtering equipment, waste oil collected in drip trays, and waste hydraulic and lubricating oils.

2.1.7 Oil residue (sludge) tank

Oil residue (sludge) tank means a tank which holds oil residue (sludge), and from which sludge may be disposed directly through the standard discharge connection or any other approved means of disposal.

2.1.8 Oily bilge water

Oily bilge water means water which may be contaminated by oil resulting from things such as leakage or maintenance work in machinery spaces. Any liquid entering the bilge system including bilge wells, bilge piping, tank top or bilge holding tanks is considered oily bilge water.

2.1.9 Oily bilge water holding tank

Oily bilge water holding tank means a tank collecting oily bilge water prior to its discharge, transfer or disposal.

2.1.10 Oily wastes

Oily wastes means oil residues (sludge) and oily bilge water.

2.1.11 Sewage

Sewage means:

- drainage and other wastes from any form of toilets, urinals, and WC scuppers, here designated as black waters
- drainage from medical premises (dispensary, sick bay, etc.) via wash basins, wash tubs and scuppers located in such premises
- drainage from spaces containing live animals, or
- other wastewaters when mixed with the drainages defined above.

2.1.12 Sewage sludge

Sewage sludge means any solid, semi-solid, or liquid residue removed during the treatment of onboard sewage.

2.1.13 Wastewater

Wastewater includes both sewage and grey water as defined in [2.1.11] and [2.1.3].

2.2 Definitions related to air pollution

2.2.1 Emission

Emission means any release of substances, subject to control by Annex VI of MARPOL 73/78, from the unit into the atmosphere or sea.

2.2.2 Installed (for a marine diesel engine)

Installed means a marine diesel engine that is or is intended to be fitted on a unit, including a portable auxiliary marine diesel engine, only if its fuelling, cooling or exhaust system is an integral part of the unit. A fuelling system is considered integral to the unit only if it is permanently affixed to the unit. This definition includes a marine diesel engine that is used to supplement or augment the installed power capacity of the unit and is intended to be an integral part of the unit.

2.2.3 NOx Technical Code

NOx Technical Code means the Revised Technical Code on Control of Emission of Nitrogen Oxides from Marine Diesel Engines adopted at MEPC 58 on 10 October 2008 with IMO Resolution MEPC.177(58), as amended by IMO Resolution MEPC.317(74).

2.2.4 Onboard incineration

Onboard incineration means the incineration of wastes or other matter on board the unit, if such wastes or other matter were generated during normal operation of that unit.

2.2.5 Onboard incinerator

Onboard incinerator means an onboard facility designed for the primary purpose of incineration.

2.2.6 Ozone-depleting substances

Ozone-depleting substances means controlled substances defined in paragraph (4) of article 1 of the Montreal Protocol on Substances that Deplete the Ozone Layer, 1987, listed in Annexes A, B, C or E to the said protocol in force at the time of application of Annex VI of MARPOL 73/78.

Ozone-depleting substances that may be found on board include, but are not limited to:

- Halon 1211 Bromochlorodifluoromethane
- Halon 1301 Bromotrifluoromethane
- Halon 2402 1,2-Dibromo-1,1,2,2-tetrafluoroethane (also known as Halon 114B2)
- CFC-11 Trichlorofluoromethane
- CFC-12 Dichlorodifluoromethane
- CFC-113 Trichloro-1,2,2-trifluoroethane
- CFC-114 1,2-Dichloro-1,1,2,2-tetrafluoroethane
- CFC-115 Chloropentafluoroethane.

2.2.7 Permanently sealed equipment

Permanently sealed equipment means equipment where there is no refrigerant charging connections or potentially removable components containing ozone-depleting substances.

2.3 Definitions related to greenhouse gases

2.3.1 Global Warming Potential (GWP)

Global Warming Potential or GWP means the climatic warming potential of a greenhouse gas relative to that of carbon dioxide ('CO2'), calculated in terms of the 100-year warming potential of one kilogram of a greenhouse gas relative to one kilogram of CO2.

2.4 Abbreviations

2.4.1

AWT : Advanced Wastewater Treatment

GHG : Greenhouse gas.

3 Documents to be submitted

3.1 General

3.1.1 Certificates

The certificates to be submitted for the additional class notations **SUSTAINABILITY-1** or **SUSTAINABILITY-2** are listed in Tab 1.

3.1.2 Operational procedures

The operational procedures to be submitted for the additional class notations **SUSTAINABILITY-1** or **SUSTAINABILITY-2** are listed in Tab 2.

3.1.3 Documents

The documents to be submitted for the additional class notations **SUSTAINABILITY-1** or **SUSTAINABILITY-2** are listed in Tab 3.

Table 1 : Certificates required for the additional class notations SUSTAINABILITY-1 and SUSTAINABILITY-2

Certificate	Reference
IOPP certificate of the unit **(1)**	Annex I of MARPOL 73/78, Appendix II and IMO Resolution MEPC.311(73)
Type approval certificate of the Oil discharge monitoring and control system	IMO Resolution MEPC.108(49) as amended by IMO Resolution MEPC.240(65), Part 3 of the annex
Type approval certificate **(4)** of: • 15 ppm bilge separator • 15 ppm bilge alarm	IMO Resolution MEPC.107(49) as amended by IMO Resolution MEPC.285(70): • Part 1 of the Annex • Part 2 of the Annex
ISPP certificate of the unit **(1)**	Annex IV of MARPOL 73/78, Appendix

(1) Only where required by MARPOL 73/78, according to the unit's gross tonnage and IMO Resolution MEPC.311(73)
(2) Onboard incinerator is not required. However, when fitted on board, it is to be of a type approved
(3) Only where required by Annex VI of MARPOL 73/78, according to the engine power and intended use
(4) The type approval certificate is to bear an indication of the 10 ppm performance for units to be assigned the additional class notation **SUSTAINABILITY-2**

Certificate	Reference
Type approval certificate of the sewage system	IMO Resolution MEPC.227(64) as amended by IMO Resolution MEPC.284(70)
Type approval certificate of the incinerator **(2)**	• IMO Resolution MEPC.244(66) • Annex VI of MARPOL 73/78, Appendix IV
IAPP certificate of the unit **(1)**	• Annex VI of MARPOL 73/78, Appendix I • IMO Resolution MEPC.194(61)
EIAPP certificates of diesel engines **(3)**	NOx Technical Code 2008, Appendix I
IAFS certificate of the unit or Declaration on Anti-fouling system	International Convention on the control of Harmful and Anti-fouling systems, 2001, Annex 4, Appendices 1 and 2
International Ballast Water Management certificate of the unit or Ballast water record book stating that an exemption has been granted	International Convention for the control and management of ships' ballast water and sediments, 2004, Regulation A-4 and Appendices 1 and 2
(1) Only where required by MARPOL 73/78, according to the unit's gross tonnage and IMO Resolution MEPC.311(73) **(2)** Onboard incinerator is not required. However, when fitted on board, it is to be of a type approved **(3)** Only where required by Annex VI of MARPOL 73/78, according to the engine power and intended use **(4)** The type approval certificate is to bear an indication of the 10 ppm performance for units to be assigned the additional class notation **SUSTAINABILITY-2**	

Table 2 : Operational procedures to be submitted for the additional class notations SUSTAINABILITY-1 and SUSTAINABILITY-2

Operational procedure	Requirements
Shipboard oil pollution emergency plan **(1)**	IMO Resolution MEPC.54(32) as amended by IMO Resolution MEPC.86(44)
Procedure to prepare and maintain an oil record book **(1)**	Annex I of MARPOL 73/78, Appendix III
Procedure to maintain, operate and troubleshoot bilge water treatment systems	IMO Circular MEPC.1/Circ.677
Bunkering procedure	
Measures to prevent oil pollution and Management and disposal of oil leakage and spillage	
Sewage and grey water management plan and discharge control plan **(1)**	
Garbage management plan including procedures to prepare and maintain a garbage record book and hazardous waste procedures **(1)**	• IMO Resolution MEPC.220(63) • IMO Circular MEPC/Circ.317 • Annex V of MARPOL 73/78, Appendix • IMO Resolution MEPC.92(45)
In case ballast water exchange according to D-1 standard is foreseen: Ballast water management plan, with procedures to prepare and maintain a Ballast Water Record Book	• International Convention for the control and management of ships' ballast water and sediments, 2004, Regulation B-1 • IMO Resolution MEPC.127(53) as amended by IMO Resolution MEPC.306(73)
Refrigerant management plan: Operating procedure to be followed to minimise the risk and the consequences of refrigerant leakage, under normal and emergency conditions, including: • checking of the piping tightness • recharge • detection of leakage • maintenance and repair	
Procedure to prepare and maintain the ozone-depleting substances record book	
Fuel oil quality management plan	Annex VI of MARPOL 73/78, Regulation 18 and Appendix VI IMO Resolution MEPC.182(59)
Management and storage plan for liquid effluents and solid waste in case of no-discharge operation **(2)**	
(1) Only where required by MARPOL 73/78, according to the unit's gross tonnage **(2)** Only for units to be assigned the additional class notation **SUSTAINABILITY-2**.	

Table 3 : Documents to be submitted for the additional class notations SUSTAINABILITY-1 or SUSTAINABILITY-2

No.	I/A **(1)**	Document **(2)**
1	I I A	General: • general arrangement plan with indication of the waste collection and conveying circuits, storage means and treatment installations intended for the prevention of pollution by oil, sewage, grey waters, garbage and hazardous packaged substances • capacity plan • program for a waste source reduction, minimization and recycling
2	I I I A A A A	Prevention of pollution by oil: • diagram of the oil residue (sludge) system, • diagram of the independent clean drain system, where provided • diagram of the oily bilge system (pumping, treatment, discharge including automatic stopping device and recirculation facilities) • diagram of the ballast water seawater discharge system • details of the bilge water holding tank • calculation of the bilge water holding tank capacity • diagram of produced water system including treatment system and monitoring and recording devices
3	I I A A I A	Prevention of pollution by wastewater: • diagram of the grey water system (collection, treatment, discharge) • diagram of the sewage system (collection, treatment, discharge) • details of the sewage holding tank and grey water holding tank • calculation of the sewage holding tank and grey water holding tank capacity • description of the sewage treatment plant, AWT plant or comminuting/disinfecting system • calculation of the storage capacity for solid wastes and liquid effluents **(3)**
4	I A A	Prevention of pollution by garbage: • general information on the equipment intended for collecting, storing, processing and disposing of garbage (except where type-approved and type approval certificate submitted) • calculation of the necessary storing, processing and disposing capacities • diagram of control and monitoring systems for garbage handling equipment
5	A I A I	Prevention of pollution by oil spillage and leakage: • diagram of the fuel oil and lubricating oil overflow systems • diagram of the fuel oil and lubricating oil filling, transfer and venting systems • arrangement of the fuel oil and lubricating oil spillage containment systems • diagram of the control and monitoring system for fuel oil filling, transfer and overflow systems
6	A	Prevention of pollution by anti-fouling systems: • specification of antifouling paint
7	A A	Prevention of pollution by refrigerants and fire-fighting media: • arrangement of retention facilities including material specifications, structural drawings and welding details, as applicable • means to isolate portions of the plant so as to avoid release of medium
8	I	Energy efficiency and GHG emission reduction: • Energy efficiency and GHG emission management plan
9	A I A I I	Hydrocarbon blanket gas system: • process and instrumentation diagrams of the hydrocarbon blanket gas system and of its connection to the cargo tanks system, to the inert gas system, to the venting systems and to the cargo tank vents recovery system • cause and effect diagram for the system • settings of the pressure/vacuum protection devices • HAZID and HAZOP reports • explosion hazard study which investigates hydrocarbon leaks from tank hatches or hydrocarbon blanket gas pipes.
10	A I A I	Vent recovery system: • process and Instrumentation diagrams of the vent recovery system and of its connection to the cargo tanks system, to the inert gas system, to the hydrocarbon blanket gas system, and to the flare system • cause and effect diagram for the system • settings of the pressure / vacuum protection devices • HAZID and HAZOP reports

(1) A = To be submitted for approval ; I = To be submitted for information
(2) Diagrams are to include information about monitoring and recording of parameters
(3) Only for units to be assigned the additional class notation **SUSTAINABILITY-2**

4 Onboard surveys

4.1 Initial surveys tests

4.1.1 After installation on board, the equipment and systems relevant to the requirements of the present Chapter are to be tested in the presence of the Surveyor under operating conditions. The control, monitoring and alarm systems are also to be tested in the presence of the Surveyor or their functioning is to be simulated according to a procedure agreed with the Society.

4.2 Periodical tests and measurements done by the Owner

4.2.1 Purpose

The following tests and measurements, done under the responsibility of the Owner, are intended to demonstrate the effective implementation of the waste management procedures and the constant level over time kept by the quality of the effluents discharged at sea.

4.2.2 Initial period tests

During the first year of commercial operation, the Owner is to proceed with the following measurements and analyses:

- collection of actual onboard data concerning the volume of waste generation, using the waste streams as defined in Ch 5, Sec 2, Tab 4
- yearly analyses of the effluent from the sewage treatment plant for pollutant concentration
- quarterly analyses of the effluent from the AWT plant for pollutant concentration, for units assigned the additional class notation **SUSTAINABILITY-2**.

4.2.3 Periodical tests after first year of service

The effluents and wastes usually discharged to sea are to be periodically sampled and analysed by a qualified laboratory. The frequency of these tests in a five-year period is specified in Tab 4.

Tab 5 lists the number of occurrences where the pollutant maximum concentration may exceed the limit concentration specified in Tab 6 for the effluent standard for analyses of waters, without exceeding the reject value.

Test results of the measurements are to be recorded in the wastewater and garbage logbooks and made available to the surveyor during the periodical surveys.

Table 4 : Frequency of analyses of waste streams after the first year of service

Waste stream	Number of analyses in a 5-year period
Effluent analyses for sewage treatment plant	2
Effluent analyses for AWT **(1)**	20
Oil content analyses of machinery bilge water	2
(1) Applies only to units assigned the additional class notation **SUSTAINABILITY-2**	

Table 5 : Permissible number of analyses exceeding limit values

Number of analyses in a 5-year period	Maximum number of analyses above limit
2-5	0
20	2

Table 6 : Analyses standard for waters

Water to be tested	Pollutant	Limit concentration	Reject value
Effluent of oil filtering equipment	Oil	15 ppm **(3)**	–
Effluent of sewage treatment plant	Thermotolerant coliforms (TC)	100 TC/100 ml	–
	Total suspended solids (TSS)	35 mg/l	–
	5-day biochemical oxygen demand (BOD5) **(1)**	25 mg/l	–
	Chemical oxygen demand (COD)	125 mg/l	–
Effluent of AWT plant **(2)**	5-day biochemical oxygen demand (BOD5) **(1)**	25 mg/l	60 mg/l
	Chemical oxygen demand (COD)	125 mg/l	–
	Total nitrogen	20 mg/l	–
	Total phosphorus	1,0 mg/l	–
(1) BOD5 is the amount, in milligrams per litre, of oxygen used in the biochemical oxidation of organic matter in five days at 20°C. **(2)** Only for units assigned the additional class notation **SUSTAINABILITY-2** **(3)** 10 ppm for units assigned the additional class notation **SUSTAINABILITY-2**			

Section 2 Requirements for the Additional Class Notation SUSTAINABILITY-1

1 Prevention of sea and air pollution

1.1 International regulations

1.1.1 It is a prerequisite for the assignment of **SUSTAINABILITY-1** or **SUSTAINABILITY-2** that the unit complies with the following regulations:

- The following annexes of MARPOL 73/78
  - Annex I as detailed in IMO Resolution MEPC.311(73) "2018 guidelines for the application of MARPOL Annex I requirements to floating production, storage and offloading facilities (FPSOs) and floating storage units (FSUs)"
  - Annex IV
  - Annex V
  - Annex VI.
- International Convention on the control of harmful anti-fouling systems, 2001.

Note 1: Additional requirements may be imposed by the Administration.

1.2 Waste management

1.2.1 Separation of waste streams

Design arrangements and procedures for collecting, sorting, treating, storing and discharging solid and liquid waste and harmful substances are to be such that the discharge or discharge prohibition criteria laid down in annexes I, IV and V of MARPOL 73/ 78 can be fulfilled.

1.3 Waste minimization and recycling program

1.3.1 Direct waste minimization and recycling programs aiming at reducing the amount and/or environmental impact of waste and discharges listed in Tab 2 and Tab 3 are to be implemented. Such programs are to cover, where relevant, the influence of measures such as:

- Use of technical water (e.g. air conditioning condensate) where possible.
- Use of water recovery systems (e.g. filtering and reuse of laundry water - last rinse use for first wash).
- Reclamation and reuse of properly treated and filtered wastewaters as technical water (e.g. in toilet flushing, laundry, open deck washing). Effluents from water treatment plants may be reused or recycled only if they comply with a recognised quality standard for potable water.
- Active water conservation (e.g. use of reduced flow shower heads, vacuum systems for toilets, laundry equipment that utilizes less water).
- Use of reusable packaging and bulk packaging.
- Replacement of plastic packaging by containers built in other material.
- Minimization of the amount of oily bilge water and processing of the oily bilge water and oil residue (sludge) in accordance with the Integrated Bilge Water Treatment System (IBTS) concept (see IMO Circular MEPC.1/Circ.642 as amended).

1.3.2 In addition to the procedures required in [1.6.9], the garbage management plan is to include the procedures for garbage source reduction, minimization and recycling.

1.4 Prevention of pollution by oil

1.4.1 Prevention of pollution by oil spillage and leakage

a) Compliance with MARPOL 73/78

The unit is to comply with MARPOL 73/78 Annex I, Reg. 12A (Oil fuel tank protection).

b) Overflow systems

All fuel and lubricating oil tanks having a capacity exceeding 10 m^3 are to be fitted with an overflow system and a high level alarm or a flow alarm in the overflow system. The alarm signal is to be given where the person in charge of the bunkering or transfer operation will normally be located.

As an alternative to the overflow system, the Society may accept spill deck containment system in way of the concerned tank, provided it has a capacity:

- of at least that 160 litres, and
- commensurate with the maximum expected filling flow rate of the tank and the time necessary to activate the shutdown of the transfer pump in case of high level in the tank.

The overflow system is to comply with the provisions of Ch 1, Sec 7, [9.3].

c) Containment systems

1) On the weather and superstructure decks, each fuel or lubricating oil tank vent, overflow and fill pipe connection and each other area where oil spillage may occur is to be fitted with a fixed deck container or enclosed deck area with a capacity of 160 litres.

The deck container or area is to be fitted with a closed drainage system.

As an alternative arrangement to the closed drainage system, the Society may accept manual draining by gravity or by means of a portable pump, in conjunction with a procedure covering the draining operation, the disposal of the drained oil and the cleaning of the container.

2) A seven-barrel spill kit containing the following is to be available on board, ready to be used during bunkering operation:

- sorbents sufficient to absorb seven barrels of oil
- non-sparking hand scoops, shovels and buckets
- portable containers suitable for holding seven barrels of recovered solid waste and seven barrels of recovered liquid waste
- a minimum of 60 litres of a deck cleaning agent
- appropriate protective clothing to protect personnel from inhalation hazards, eye exposure and skin contact
- non-sparking portable pumps with appropriate hoses.

d) Oil detection in cooling water circuits

Hydrocarbon detectors are to be provided in auxiliary engines sea water and fresh water cooling systems comprising fuel oil or lubricating oil heat exchangers in order to detect any contamination of the water.

For closed loop circuits, visual means to detect a hydrocarbon leakage in the expansion tanks may be accepted as an alternative to hydrocarbon detectors.

e) Operational procedures

The onboard operational procedure is to cover:

- measures to prevent oil pollution
- oil leakage and spillage management and disposal, and cleaning of the deck containers.

1.4.2 Oily wastes

a) Compliance with MARPOL 73/78

The unit is to comply with the following requirements of MARPOL 73/78 Annex I, and with the relevant unified interpretations and provisions of IMO Resolution MEPC.311(73):

- Reg. 12 for arrangement and capacity of oil residues (sludge) tanks
- Reg. 13 for standard discharge connection
- Reg. 14 for oil filtering equipment
- Reg. 15 for oil discharge criteria
- Reg. 17 for oil record book (machinery space operations).

b) Bilge water holding tank

All machinery space bilges and spaces containing hydraulic equipment are to be drained into a bilge water holding tank before separation and oil filtration or discharge ashore. This bilge holding tank is to be separate and independent from the sludge tanks.

Sea or freshwater drains not contaminated by oil may be discharged overboard.

For units operating with heavy fuel oil having a relative density greater than 0,94 at 15°C, the bilge water holding tank is to be fitted with heating facilities, except if the oily water separator capability to efficiently treat the oily water at ambient temperatures (without heating) is justified.

The bilge water holding tank is to be arranged so as to facilitate the separation of any oil (or oil emulsions resulting from the use of bilge cleaning agents) from the bilge water and the removal of accumulated sediments.

The discharge piping system from the bilge water holding tank is to be terminated by the standard discharge connection specified in MARPOL 73/78 Annex I, Reg. 13.

c) Oil water separating equipment

The following equipment is to be provided on board and is to comply with IMO Resolution MEPC.107(49) as amended by IMO Resolution MEPC.285(70):

- 15 ppm bilge separator
- 15 ppm bilge alarm
- automatic stopping device.

The bilge separator, bilge alarm and automatic stopping device are to be of a type approved and individually certified by the Society. Existing type approval or certification (e.g. Directive 2014/90/EU) may be considered by the Society.

The capacity of the bilge separator is to take into account the operation requirements of the unit, the volume of the bilge water holding tanks and the separating technology.

The 15 ppm bilge separator and the 15 ppm bilge alarm are to be installed in accordance with the provisions of IMO Resolution MEPC.107(49), paragraph 6 as amended by IMO Resolution MEPC.285(70).

d) Oil residue (sludge) tanks

The minimum capacity of the oil residue (sludge) tank is to be calculated following criteria specified in MARPOL 73/78 Annex I, Unified Interpretation 16.

The arrangement of the oil residue (sludge) tank is to comply with MARPOL 73/78 Annex I, Reg. 12 and is to:

- Be provided with a designated pump that is capable of taking suction from the oil residue (sludge) tank(s) for disposal of oil residue (sludge). Oil residue (sludge) may be disposed of directly from the oil residue (sludge) tanks through the standard discharge connection referred to in MARPOL 73/78 Annex I, Reg. 13, or any other approved means of disposal.
- Have no discharge connections to the bilge system, oily bilge water holding tank(s), tank top or oily water separators unless for arrangement authorized in MARPOL 73/78 Annex I, Reg. 12.3 (see also IACS Recommendation 121).
- Be designed and constructed so as to facilitate their cleaning and the discharge of residues to reception facilities.

e) Overboard discharges from the bilge pumping system

The overboard discharge valve of any bilge overboard discharge line, unless passing through the 15 ppm bilge separator, is to be kept shut and provided with lead-sealing arrangements.

Note 1: Lead-sealing arrangements is not to be understood as a requirement for the valves to be blanked or physically locked. Emergency bilge discharge, and other overboard discharge valves of similar nature, must be available for use at all times in case of an emergency (SOLAS II-1/21). Valve sealing may be accomplished through use of a breakable seal, electronic tracking, or similar method.

f) Segregation of oil and water ballast

No ballast water is to be carried in any fuel oil or lubricating oil tank.

g) Discharge records

Provisions are to be made to record the following parameters related to the oily water discharge, according to IMO Circular MEPC.1/Circ.736/Rev.2:

- date and time of the discharge
- quantity and oil content of oily water discharged.

The unit is to be provided with an oil discharge monitoring and control system complying with the requirements of IMO Resolution MEPC.108(49) as amended by IMO Resolution MEPC.240(65). The oil discharge monitoring and control system is to be of a type approved and individually certified by the Society. Existing type approval or certification (e.g. Directive 2014/90/EU) may be considered by the Society.

h) Operational procedures

Operational procedures covering oil pollution prevention are to cover the following topics:

- procedure to maintain, operate and trouble shoot bilge water treatment systems
- procedure to prepare and maintain an oil record book.

i) The bilge water holding tank is to have a capacity that provides flexibility of operation to the unit, without the need to discharge de-oiled water overboard. The minimum capacity of the bilge water holding tank, in m^3, is not to be less than the value calculated from Tab 1. Lower capacity may however be accepted based on justification e.g. taking into account operational feed-back from similar units.

Table 1 : Minimum capacity of the bilge water holding tank according to engine rating

Engine rating (kW)	Capacity (m^3)
Up to 1 000	4
Above 1 000 up to 20 000	P/250 **(1)**
Above 20 000	40 + P/500 **(1)**
(1) P = engine rating in kW	

1.4.3 Produced water

a) Where produced water disposal into the sea is foreseen, arrangements are to be made so that the oil and grease content does not exceed 42 mg/l daily maximum and 29 mg/l monthly average.

b) Discharge records

Provisions are to be made to record the following parameters related to produced water discharge:

- date and time of the discharge
- quantity and oil and grease content of produced water discharged.

1.5 Wastewaters

1.5.1 Compliance with MARPOL 73/78

The unit is to comply with the relevant requirements of MARPOL 73/78 Annex IV:

- Reg. 9 for sewage systems
- Reg. 10 for standard discharge connection
- Reg. 11 for discharge criteria.

Note 1: Discharge of grey water is not regulated by MARPOL 73/78.

1.5.2 Design and arrangement of the sewage and grey water systems

The unit is to be fitted with a sewage system and a grey water system designed and arranged as follows:

- an approved sewage treatment plant or sewage comminuting and disinfecting system is to be provided
- a tank is to be provided for the storage of untreated or treated sewage with a capacity complying with [1.5.3]
- a tank is to be provided for the storage of grey waters with a capacity complying with [1.5.3]
- grey waters from galleys are to be collected separately from other grey waters and led through a grease trap prior to additional treatment, storage or discharge.

Note 1: Treated sewage and grey water holding tanks may be combined together.

Note 2: Plastic garbage is to be separated from sewage and/or grey waters before entering the treatment unit.

1.5.3 Holding tanks

Holding tanks for sewage and grey water are to have a capacity sufficient for 24 hours operation of the unit, having regard to the maximum number of persons on board, the daily production of wastewater given in Tab 2 and other relevant factors.

The holding tanks are to be protected against corrosion and fitted with a level indicator and a high level alarm.

The holding tank capacity is to be justified in regards of the unit's intended usage, the maximum number of people on board and the sewage treatment systems installed on board. The wastewater quantities to be considered are to be derived from the experience gained on similar types of units operated in similar conditions. Where no data are available, the figures listed in Tab 2 are to be used.

The sewage discharge pipes connection to reception facilities is to be fitted with standard discharge connection in accordance with MARPOL 73/78 Annex IV, Reg. 10.

Sewage, including drainage from medical premises, is to be collected separately from grey water, except if a common treatment installation is installed on board.

Note 1: This does not preclude the mixing of effluents after treatment (e.g. treated sewage mixed with grey water).

Note 2: When sea water is mixed with wastewater (e.g. for the purpose of washing the holding tanks), the discharge requirements for the wastewater apply to the resulting mixture.

Note 3: When categories of wastewater having different discharge requirements are mixed together, the most stringent requirements apply to the resulting mixture.

Table 2 : Wastewater generation quantities

No.	Type of wastewater	Quantities (litres/person/day)
1	Black water	12 for a vacuum system 100 for a conventional flushing system
2	Grey water (excluding laundry and gallery)	100
3	Laundry	40
4	Galley	60
5	Total grey water (2+3+4)	200

1.5.4 Sewage treatment plants and piping

Sewage treatment plants are to be of a type approved and individually certified by the Society. Existing type approval or certification (e.g. Directive 2014/90/EU) may be considered by the Society. Sewage treatment plants are to comply with the provisions of IMO Resolution MEPC.227(64), as amended by IMO Resolution MEPC.284(70).

Provisions are to be made in the design for easy access points for the purpose of obtaining representative influent and effluent samples.

The capacity of the sewage treatment plant is to be enough to accommodate the maximum number of people on board. The wastewater quantities to be considered are to be derived from the experience gained on similar types of units operated in similar conditions. Where no data are available, the figures listed in Tab 2 are to be used.

1.5.5 Sewage sludge

Arrangements are to be made for sludge from sewage treatment to be collected and stored in view of being transferred ashore or, where permitted, incinerated on board.

Where provided, incineration devices are to completely burn the sludge to a dry and inert ash and not to discharge fly ash, malodors or toxic substances.

The capacity of the sewage sludge tanks is to be calculated taking into consideration the operation of the unit, the number of crew, the equipment and systems to store and handle the sewage and the incinerator capacity.

Arrangements are to be made to dispose of ashes from sludge incineration ashore.

1.5.6 Operational procedures

The wastewater management plan is to cover the following topics:

- sewage and grey water installation and maintenance
- procedures and arrangement to obtain representative influent and effluent samples
- discharge control plan and procedure following requirements of MARPOL 73/78 Annex IV, Reg.11 and, as relevant, other regulations such as IMO Resolution MEPC.264(68), Part II-A, Chapter 4.

1.6 Garbage and hazardous wastes

1.6.1 Compliance with MARPOL 73/78

The unit is to comply with the requirements of MARPOL 73/78 Annex V:

- Reg. 3, 4, 5 and 6 for disposal into the sea criteria.
- Reg. 9 for placards, garbage management plans and garbage record-keeping.

1.6.2 Storage and disposal

Except otherwise stated in this Article, storage arrangements are to be provided for all kinds of liquid and solid wastes, with a capacity corresponding to a duration to be justified based on the operational profile of the unit.

Note 1: Although disposal into the sea and onboard incineration are possible in the conditions specified in MARPOL 73/78, storage in view of discharge to port reception facilities is to be given first priority. Attention is drawn to the specific requirements that may be made mandatory by certain Administrations, which may restrict or prohibit waste discharge and/or incineration in the waters under their jurisdiction.

1.6.3 Handling of hazardous waste

Hazardous wastes are to be collected and stored in separate leakproof containers prior to disposal ashore. The storage capacity is to be sufficient for the average production of 30 days. The contents of all containers are to be clearly marked.

Note 1: Waste fluids associated with photo processing, including X-ray development, may be treated to remove silver for recycling. The effluent from the recovery unit may be led to the grey water provided it contains less than 5 parts per million (ppm). The residues from the recovery unit are to be landed ashore for disposal or recycling.

1.6.4 Collection of garbage

Garbage bins are to be placed at suitable places and within a suitable distance in accommodation spaces and open decks. Hazardous wastes, plastics and food contaminated wastes are to be collected separately from other wastes.

1.6.5 Storage of garbage

The unit is to have sufficient capacity to store all kinds of garbage produced during a duration to be justified based on the operational profile of the unit, taking into account the daily waste generation figures given in Tab 3 and the values of density given in Tab 4.

When an incinerator is used, the needed capacity for wastes other than glass and tins may be reduced by 40%, without being less than the needed volume corresponding to the duration based on the operational profile of the unit.

Table 3 : Garbage generation quantities

No.	Type of waste	Quantities (kg/person/day)
1	Plastics	0,1
2	Paper and cardboard	1,0
3	Glass and tins	1,0
4	Food wastes	0,7
5	Total garbage (1+2+3+4)	2,8

Table 4 : Waste density

Type of waste	Density (kg/m³)	
	Compacted waste	Uncompacted waste
Glass, tin	1600	160
Paper, cardboard, plastic	410	40
Food wastes	–	300

1.6.6 Food wastes

Arrangements are to be made to store food wastes prior to discharge to port reception facilities or, where permitted, disposal into the sea.

The onboard storage capacity is to be sufficient for the food waste production over a duration to be justified based on the operational profile of the unit, taking into account the figures given in [1.6.5] and the values of density given in Tab 4.

Where food waste disposal into the sea is permitted, precautions are to be taken to ensure that plastics contaminated by food wastes, like plastic food wrappers, are not discharged to sea with other food wastes.

1.6.7 Incinerators

Where fitted, incinerators are to be of a type approved and individually certified by the Society. Existing type approval or certification (e.g. Directive 2014/90/EU) may be considered by the Society. Incinerators are to be designed and constructed according to the requirements of:

- IMO Resolution MEPC.244(66), as amended by IMO Resolution MEPC.368(79)
- MARPOL 73/78 Annex VI, Appendix IV.

Hazardous waste management procedures including segregating hazardous wastes are to be instituted on board each unit to ensure hazardous wastes are not introduced into the incinerator. In particular, batteries are to be removed from any waste that will be incinerated on board.

1.6.8 Discharge records

Provisions are to be made to record the following parameters related to garbage discharge:

- date and time of discharge
- estimated amounts discharged for each category, including incinerator ash (in cubic meters).

1.6.9 Operational procedures

Procedures for collection, sorting, processing and disposal of garbage are to be available in the garbage management plan required by MARPOL 73/78 Annex V, Reg. 9.

The garbage management plan is to follow IMO Resolution MEPC.220(63) “2012 Guidelines for the development of garbage management Plan”. Restrictions to the discharge of garbage into the sea are to be clearly indicated and in accordance with MARPOL 73/78 Annex V (see also IMO Resolution MEPC.295(71) “2017 Guidelines for the implementation of MARPOL 73/78 Annex V”, Table 1).

The garbage management plan is to include procedures in order to make sure that the following hazardous wastes are not discharged at sea nor mixed with other waste streams:

- photo processing waste (including X-ray development fluid waste)
- dry cleaning waste, containing in particular tetrachloroethylene or perchloroethylene (PERC)
- printing materials, like inks, except soy based, non-chlorinated hydrocarbon-based ink products
- laser printer toner cartridges
- unused and outdated pharmaceuticals
- fluorescent / mercury vapour bulbs
- batteries
- used cleaners, solvents, paints and thinners
- products containing metals such as lead, chromium, copper, cadmium and mercury.

1.7 Hull anti-fouling systems

1.7.1 Compliance with IMO AFS Convention

The unit is to comply with the relevant requirements of IMO Convention on the Control of Harmful Anti-fouling Systems on Ships, 2001, requiring the complete prohibition of organotin compounds which act as biocides and of cybutryne in anti-fouling systems.

1.7.2 Type-approval of anti-fouling systems

Anti-fouling paints are to be of a type approved by the Society, on the basis of the following criteria:

- the product is to be free of organotin tributyltin (TBT)
- small quantities of organotin compounds acting as a chemical catalyst are allowed provided their concentration does not exceed 2500 mg total tin per kg of dry paint
- average values of cybutryne are not to exceed 200 mg of cybutryne per kg of dry paint.

1.8 Ballast water management

1.8.1 Compliance with the International Ballast Water Management Convention

The unit is to comply with the International Convention for the Control and Management of Ships' Ballast Water and Sediments, 2004 and with the relevant Guidelines, as amended.

Note 1: Exemption granted by the Administration in pursuance of Regulation A-4 of the International Ballast Water Management Convention is acceptable.

1.8.2 Ballast water exchange

In case an exemption is granted by the Administration allowing ballast water exchange operations in accordance with standard D-1, the following provisions are to be complied with:

a) Design of the pumping and piping systems:

The pumping and piping systems involved in the ballast water exchange are to comply with the provisions of Ch 1, Sec 7, [7].

b) Sediment handling:

Arrangements are to be made for:

- monitoring the sediment build up
- leaning the tanks and removing the sediments
- disposing the sediments to reception facilities.

c) Ballast water exchange operations:

The ballast water management plan is to describe ballast water exchange procedure in accordance with IMO Resolution MEPC.288(71).

d) Discharge records:

Provisions are to be made to get and record the following parameters related to the ballast water discharge:

- date and time of discharge
- unit location (latitude and longitude)
- amounts of water exchanged
- amount of sediments disposed to reception facilities.

1.9 Refrigeration systems

1.9.1 Compliance with MARPOL 73/78

The unit is to comply with MARPOL 73/78 Annex VI, Reg. 12 (Ozone-Depleting Substances).

1.9.2 Application

The requirements of this sub-article apply to the unit's refrigeration and air conditioning permanent installations with an initial charge of more than 3kg or more than 5 tonnes of CO2 equivalent of refrigerant.

They do not apply to permanently sealed equipment as defined in Ch 5, Sec 1, [2.2.7].

1.9.3 Acceptable refrigerants

The use of halogenated substances, including hydrochlorofluorocarbons (HCFCs), as refrigerant is prohibited.

1.9.4 Retention facilities

Refrigeration systems are to be fitted with retention facilities having the capability to retain the volume of refrigerant contained in the largest individual refrigeration unit, should the necessity arise to empty any one unit. The retention facilities may be either:

- fully independent from the refrigeration system, i.e. separate tanks, or
- part of the refrigeration system, i.e. redundant condensors. In this case, the combined capacity of the condensors is to be sufficient to store the total volume of refrigerant in the system considering that any one condensor is unavailable e.g. for repair or maintenance reasons.

The retention facilities may be tanks for liquid media and/or bottles for gaseous media. If only tanks for liquid are used as retention facilities, one or more compressors having the combined capacity to discharge completely the medium from the system into the tanks are to be installed.

1.9.5 Prevention of leakage

The following measures are to be taken in order to avoid deliberate emissions of ozone-depleting substances:

- Refrigeration systems are to be designed in such a way as to minimise the risk of medium release in the case of maintenance, repair or servicing.
- Arrangements are to be made to isolate those sections which are to be serviced by a system of valves and by-passes, in such a way as not to stop the operation of the plant, while in service, preventing the risk of release of the medium outside of the plant.
- Means are to be provided to avoid the possibility of leak to the atmosphere of the refrigerants or its vapours in any case of failure of the plant.
- A warning instruction plate stating that deliberate emissions of halogenated substances is prohibited is to be displayed in the vicinity of the vessels and of the releasing devices.

This requirement does not apply to spaces containing only pipes.

1.9.6 Leak detection

Provisions are to be made in the onboard operational procedure for checking of the refrigerants for leakage by trained people at a frequency shown in Tab 5, depending on the initial charge of the system in tonnes of CO2 equivalent, and corrective actions and repairs in case of leakage detection.

Table 5 : Leak checks minimum frequency

Charge of fluorinated greenhouse gas, C (tonnes of CO2 equivalent)	Leak checks maximum interval
$5 \leq C < 50$	6 months
$50 \leq C < 500$	3 months
$C \geq 500$	1 months

1.9.7 Records

Provisions are to be made to record:

- recharge, full or partial, of equipment containing ozone-depleting substances
- repair or maintenance of equipment containing ozone-depleting substances, including checks for leakages
- discharge of ozone-depleting substances to the atmosphere and leakage
- discharge of ozone-depleting substances to land-based reception facilities
- supply of ozone-depleting substances to the unit, storage location and quantities.

1.9.8 Operational procedures

The refrigerant management plan is to include:

- maintenance procedure
- leakage checking frequency and procedure
- list and quantity of all refrigerants on board
- qualification and training of personnel.

1.10 Fire-fighting systems

1.10.1 Compliance with MARPOL 73/78

The unit is to comply with MARPOL 73/78 Annex VI, Reg. 12 (Ozone-Depleting Substances).

1.10.2 Acceptable fire-fighting media

The use of halon and halocarbons media in the fixed and portable fire-fighting equipment is prohibited.

Extinguishing media containing perfluorooctane sulfonic acid (PFOS) are not allowed.

1.10.3 Design requirements for fire-fighting systems

Provisions are to be made for the safe containment and disposal of fire-fighting media in case of spillage during maintenance or repair.

1.11 Emission of nitrogen oxides (NOx)

1.11.1 Compliance with MARPOL 73/78

Diesel engines installed on the unit are to comply with the requirements of:

- MARPOL 73/78 Annex VI, Reg. 13
- NOx Technical Code (2008), as amended.

1.11.2 Application

The requirements of this sub-article apply to all diesel engines, independently of the service, with a rated power of more than 130 kW, installed on the unit, with the exceptions of:

- emergency diesel engines, diesel engines installed in lifeboats and any other diesel engines intended to be used solely in an emergency situation, independently of their rated power
- engines which are subject to alternative measures for limiting NOx emission, under special consideration of the Society.

Note 1: NOx emissions from gas only engines, gas turbines, boilers and incinerators are not subject to these requirements.

1.11.3 NOx certification of engines

Prior to installation on board the unit, engines are to be NOx-certified in accordance with the relevant provisions of the NOx Technical Code for the intended application. A valid EIAPP certificate (or statement of compliance) is normally to be issued by the Society.

1.12 Emission of sulphur oxides (SOx)

1.12.1 Compliance with MARPOL 73/78

The unit is to comply with the relevant requirements of MARPOL 73/78 Annex VI and related Guidelines:

- Reg. 14 for Sulphur Oxides (SOx) and Particulate Matter.
- Reg. 18 and Appendices V and VI for fuel oil quality.
- IMO Resolution MEPC.182(59) and IMO Circular MEPC.1/Circ.889 for the sampling of fuel oil for consumers inside hull machinery space.

1.12.2 Use of low sulphur fuel oils

A verification procedure is to be available on board, allowing to determine whether the fuel oil delivered to, in use or carried for use on board the unit is meeting the applicable sulphur limit of MARPOL 73/78 Annex VI, Reg.14. This procedure is to be in accordance with MARPOL 73/78 Annex VI, Appendix VI and is to include the positions of the sampling arrangements on the fuel oil systems.

Arrangements are to be made to record the volume of fuel oil in each tank.

1.13 Emission of hydrocarbon vapours and Volatile Organic Compounds (VOC)

1.13.1 A hydrocarbon blanket gas system coupled with a vent recovery system is to be provided on board.

The hydrocarbon blanket gas system is to comply with the requirements of Pt D, Ch 1, Sec 18, [5]. The vent recovery system is to be capable of recovering gas from all vents from the process and from the cargo tanks. The cargo oil tank vent system is to comply with the requirements of Pt D, Ch 1, Sec 16, [3].

2 Energy efficiency and GHG emission management plan

2.1 General

2.1.1 An energy efficiency and GHG emission management plan is to be established, describing a continuous process in order to reduce GHG emissions, possibly by improving energy efficiency. The energy efficiency and GHG emission management plan is to:

- make an inventory of the onboard energy production systems, main energy users and the GHG emission sources from the unit, as well as the monitoring systems used on board and mitigation measures
- address and document energy efficiency improvement measures and GHG emission reduction targets with specific management organization and procedures:
  - to ensure the execution of the improvement measures, and
  - to plan any necessary corrective actions.

2.2 Description of the unit

2.2.1 The first part of the plan is to describe the unit with the aim to reflect the current status of the unit energy usage and sources of GHG emissions, including on the one hand the hull systems and on the other hand the topside systems.

Each part, hull and topside, is to include the following:

- the energy production systems (electric power production, heat production and direct mechanical power production), main users and electric system arrangement

- the sources of GHG emissions, including refrigerant fluids, are to be listed with GHG emitted, estimated emission rate/quantity, impact on environment and other relevant data such as Global Warming Potential (GWP).

2.3 Monitoring systems

2.3.1 The energy efficiency and the GHG emissions of the unit are to be quantitatively monitored by established methods following a recognized standard. The monitoring tools are to target at least the goal indicators set out in [2.5].

The plan is to:

- describe the monitoring systems
- describe the procedure for collecting data and the monitoring intervals
- indicate the personnel responsible to collect and process the data.

Relevant methods for monitoring from IMO Resolution MEPC.346(78) may be applied.

2.4 Mitigation measures

2.4.1 The mitigation measures and energy saving measures already applied on board (for example, heat recovery system, vapour recovery system, etc.) are to be described. The effectiveness of such measures is also to be assessed.

Operational activities such as leakage monitoring and maintenance may be mentioned if relevant.

2.5 Emission reduction and energy efficiency improvement

2.5.1 The energy efficiency and GHG emission plan is to set improvement targets with associated Key Performance Indicators (KPIs), as a result of previous assessment done in [2.2] [2.3] and [2.4]. They are to be specific to the unit.

The emission reduction and energy efficiency actions to be taken to achieve the targets set up are to be documented and planned as far as possible. Both technical and operational solutions are acceptable.

2.6 Management and crew training

2.6.1 The person in charge of the plan is to be identified in the Energy efficiency and GHG emission management plan.

A brief description of the organization for management, including reference to the applied quality standards, and follow up of the implementation of the action decided in [2.5] and corrective actions if necessary is to be provided.

The training of personnel in charge of applying the actions decided is to be described and recorded.

3 Preparation for unit recycling

3.1 GREEN PASSPORT

3.1.1 The unit is to comply with the requirements for the additional class notation **GREEN PASSPORT**, as defined in NR528 Green Passport.

4 Enhancement of people well-being on board

4.1 Habitability

4.1.1 The accommodation block and hull control stations are to be in compliance with the criteria applicable to passenger ships according to the Maritime Labour Convention 2006, Regulation 3.1, Standard A3.1. Alternative arrangements for transit situations may be accepted by the Society on a case-by-case basis.

4.2 Noise and vibrations

4.2.1 Noise

The unit is to comply with the requirements for the additional class notation **COMF-HEALTH-NOISE- 2**, as defined in Pt A, Ch 1, Sec 2, [8.4.3].

4.2.2 Vibration

The unit is to comply with the requirements for the additional class notation **COMF-HEALTH-VIB-2**, as defined in Pt A, Ch 1, Sec 2, [8.4.3].

Section 3 Requirements for the Additional Class Notation SUSTAINABILITY-2

1 Prevention of sea and air pollution

1.1 Waste management

1.1.1 The storage capacity for each of the following solid and liquid wastes is to be sufficient to allow the no discharge operation of the unit during a reference duration D (in days):

- plastics
- paper and cardboard
- glass and tins
- food waste
- sewage
- grey water
- sewage sludges (where applicable)
- bilge water
- oil residues (sludges)
- hazardous wastes
- washwater treatment residues from exhaust gas cleaning units (where applicable).

1.1.2 The reference no discharge duration D (in days) is to be at least one day. A longer no discharge duration may be considered if specified by the Owner.

1.1.3 Except otherwise stated, the storage capacities are to be based on:

- the maximum number of persons on board
- the daily production of solid waste and liquid effluents given in Ch 5, Sec 2, [1.5.4] and Ch 5, Sec 2, [1.6.5].

1.1.4 Unless otherwise justified, the minimum capacity required for the bilge water holding tank is not to be less than D times the capacity given in Ch 5, Sec 2, [1.4.2], item i).

1.2 Wastewaters

1.2.1 The unit is to be fitted with an advanced wastewater treatment (AWT) plant, capable of treating both sewage and grey waters with an effluent quality complying with the provisions of [1.2.3].

Note 1: Effluents from the AWT plant may be reused or recycled only if they comply with a recognized quality standard for potable water.

1.2.2 The capacity of the AWT plant is to be sufficient for the maximum number of persons on board, taking into account the sewage and grey water quantities given in Ch 5, Sec 2, [1.5.4].

1.2.3 The AWT plant is to be of a type approved and individually certified by the Society. Existing type approval or certification (e.g. Directive 2014/90/EU) may be considered by the Society. The AWT plant is to comply with the effluent standards given in IMO Resolution MEPC.227(64), paragraph 4.1 and with the additional standards given in Tab 1.

Table 1 : Additional effluent standards for AWT plants

Parameter	Limit	Reference of the standard
Total nitrogen	20 Q_i/Q_e mg/l or at least 70% reduction **(1)(2)**	IMO Resolution MEPC.227(64), paragraph 4.2
Total phosphorus	1,0 Q_i/Q_e mg/l or at least 80% reduction **(1)(2)**	IMO Resolution MEPC.227(64), paragraph 4.2

(1) The dilution factor Q_i/Q_e is equal to the ratio of the influent Q_i (sewage, grey water and other liquid streams to be processed by the treatment plant) to the effluent Q_e (treated wastewater produced by the treatment plant).

(2) Reduction in relation to the load of the influent.

1.3 Prevention of pollution by oil

1.3.1 Oily condensates from venting pipes

Vent pipes from engines crankcases are to be led to a venting box provided with a draining pipe connected to an oily drain tank.

This requirement is not applicable to vent pipes from gas and dual-fuel engines crankcases for which a drip tray is to be fitted with suitable draining arrangement.

Procedures covering the draining operation, the disposal of the drained oil and the cleaning of the drip tray are to be provided.

1.3.2 The oily water separator (OWS) required by Ch 5, Sec 2, [1.4.2], item c) is to be capable of producing effluents having a hydrocarbon content not exceeding 10 ppm. The bilge alarm and the automatic stopping device are also to be efficient for the 10 ppm limit.

Note 1: ppm means parts of oil per million parts of water by volume.

1.4 Refrigeration systems

1.4.1 Acceptable refrigerants

All refrigerants used on board are to have:

- a Global Warming Potential (GWP) not exceeding 2000
- an Ozone Depleting Potential (ODP) equal to zero.

1.5 Emission of sulphur oxides (SOx)

1.5.1 Use of ultra-low sulphur fuel oils

The unit is to be designed to store and use fuel oil with a sulphur content not exceeding 0,10% m/m.

The verification procedure required by Ch 5, Sec 2, [1.12.2] is to allow determining whether the fuel oil delivered to, in use or carried for use on board the unit is meeting this limit.

2 Enhancement of people well-being on board

2.1 Habitability

2.1.1 The accommodation block and hull control stations are to be in compliance with the requirements of NR467 Pt F, Ch 6, Sec 6, as applicable to passenger ships.

2.2 Noise and vibrations

2.2.1 Noise

The unit is to comply with the requirements for the additional class notation **COMF-HEALTH-NOISE- 1**, as defined in Pt A, Ch 1, Sec 2, [8.4.3].

2.2.2 Vibration

The unit is to comply with the requirements for the additional class notation **COMF-HEALTH-VIB-1**, as defined in Pt A, Ch 1, Sec 2, [8.4.3].

NR445

RULES FOR THE CLASSIFICATION OF OFFSHORE UNITS

Part D
Service Notations

January 2024

Table of Content

Chapter 1 Production, Storage and Offloading Surface Units

Section 1 General

Section 2 Subdivision and Stability

Table of Content

Section 3 Structure Design Principles

Table of Content

Table of Content

Section 11 Fore Part

Section 12 Aft Part

Table of Content

Part D
Service Notations

CHAPTER 1
PRODUCTION, STORAGE AND OFFLOADING SURFACE UNITS

Section 1 General

1 Application

1.1 General

1.1.1 The present Chapter deals with particular provisions applicable to floating units for production, and/or storage of hydrocarbons and intended to be assigned with one of the notations listed in [1.2.1].

1.1.2 Requirements of the present Chapter are complementary to the provisions of Part A, Part B and Part C which remain applicable, except where otherwise specified.

1.2 Class Notations

1.2.1 Structural type notations

Requirements of the present Chapter apply to surface units having one of the following structural type notations:

- **offshore barge** - which may be granted to surface type floating units, including the case of converted ships, when unable to perform non-assisted voyages.
- **offshore ship** - which may be granted to surface type floating units having a propulsion system and steering appliances for transit purpose, but not involved in the transport of cargoes, as defined in [3.2.14].

1.2.2 Service notations

This Chapter applies to units having at least one of the following service notations:

- **oil storage** - which may be granted to surface units engaged in the storage of oil products (in significant quantities).
- **oil production unit** - which may be granted to surface units designed and equipped for oil production and related activities.

For the definition of these notations, see Part A, Chapter 1.

1.2.3 Site, transit and navigation notations

Site, transit and navigation notations are granted in accordance with the provisions of Pt A, Ch 1, Sec 2, [7].

1.2.4 Additional service features

The following additional service features defined in Pt A, Ch 1, Sec 2 are mandatory for units covered by the present Chapter:

- **POSA**, **POSA HR** or **POSA JETTY**
- **INERTGAS** (mandatory for units with service notation **oil storage** and for units with service notation **oil production unit** having integrated process tanks)

1.2.5 Additional class notations

The following additional class notations are mandatory for units covered by the present Chapter:

- **AUTO**
- **INWATERSURVEY** (mandatory for permanent units)
- **VeriSTAR-HULL**

Other additional class notations defined in Part A may be granted to units covered by the present Chapter.

Besides, the additional class notations as given by the Ship Rules may be granted.

1.2.6 Comfort on board floating units

The additional class notations **COM HEALTH-NOISE-g** and **COMF HEALTH-VIB-g** defined in Pt A, Ch 1, Sec 2, [8.4.3], are relevant to the assessment of comfort and health on board floating units with regard to the level of noise and/or vibration.

1.3 Scope

1.3.1 Classification Society involvement

The scope of classification for units listed in [1.2.1] is based on an appraisal of the integrated unit covering, in general:

a) Hull, accommodation, helideck and hull attachments and appurtenances including:
   - riser support structure
   - structure to which the moorings are attached, and supports for mooring equipment
   - foundations for the support of topsides modules, the flare tower, and the hull mounted equipment
   - support structure for life saving appliances
   - passive fire protection and cathodic protection.

b) Intact and damage stability.

c) Marine equipment (with foundations) pertaining to the offloading facilities.

d) Accommodation quarters/

e) Mooring system:
   - for the additional service feature **POSA**:
     mooring line components (anchors, chains, wire and accessories) and hull mounted equipment (fairleads, stoppers...)
   - for the additional class notation **OHS**:
     mooring line handling equipment (winch, sheaves...).

f) Lifting appliances (for the additional class notation **ALM**).

g) Equipment and systems necessary for the safe operation of the hull and to the safety of personnel on board, as defined in the present Rules and related applicable Rules (taking into account the class notations **AUTO**, **INERTGAS** and **LSA**).

h) Equipment and systems installed in the hull, the failure of which may jeopardise the safety of the floating unit.

i) The fire and gas detection system for the hull as well as the definition of the hazardous areas of the hull.

j) The fire water and foam system for the protection of the hull.

k) Topsides process plant.

l) Propulsion plant.

Some of the systems and items mentioned in items g), h), i), j) and k) above are possibly positioned in topsides facilities and remain under the scope of classification, regardless of the additional class notation **PROC** (see also [1.8.2]).

For each project, the detailed boundaries for the classification of **offshore barge** or **offshore ship** are defined by the Society on a case-by-case basis and with reference to the requested structural type and service notations, additional class notations and additional service features.

1.3.2 Classification - Design Criteria Statement

Classification is based upon the design data or assumptions specified by the party applying for classification.

A Design Criteria Statement is to list the services performed by the unit and the design conditions and other assumptions on the basis of which class is assigned to the unit.

The Design Criteria Statement is to be:

- issued by the Society
- referred to on the unit classification certificate
- incorporated in the Operating Manual, as stated in Pt A, Ch 1, Sec 1, [3.4].

Additional details about the Design Criteria Statement are given in Pt A, Ch 1, Sec 1, [1.6].

1.3.3 Classification process

For units intended to have one of the notations given in [1.2.1], the classification process, prior to issuance of the final class certificate, includes towing from completion yard to site (see [1.10], hook-up operations and commissioning at site.

Procedures and detailed schedules for construction at each construction site together with towing/transit, installation, anchoring and production hook-up, and commissioning activities are to be submitted to the Society for information. These documents are also to indicate the possible interfaces between the parties involved. Basing on these documents, the Society prepares the survey program for inspection and drawing review.

1.3.4 Permanent installations

Surface units having one of the notations given in [1.2.1] are considered as permanent installations when performing their service either:

- at a single location, or
- on a single site for a duration not less than, typically, 5 years.

Two types of permanent installations are to be considered:

- disconnectable, when the unit has a means of disengaging from its mooring and riser systems in extreme environmental or emergency conditions
- non-disconnectable.

A permanent installation is assigned with a site notation consisting in the name of the unit operation field.

1.3.5 Non-permanent installations

In case of mobile units not considered as permanent installations, special requirements are to be met, based on the operating requirements. Such requirements are to be mentioned in the Design Criteria Statement and may influence not only the design but also the in-service inspections.

1.4 Applicable rules

1.4.1 General application of the Rules

The provisions of these Rules are applicable to the design and construction of newbuild surface units and to reassessment and conversion work of an existing unit or ship when converted to a unit covered by the present document (see also [1.5.3]).

When reference is made to "Ship Rules", the applicable requirements are those for ships greater than 65 m in length. In case of converted ships, the Society reserves the right to refer to editions of the Ship Rules published prior the conversion stage.

The Society may consider the acceptance of alternatives to these Rules, provided they are deemed equivalent to the Rules, to the satisfaction of the Society.

1.4.2 Hull structure

The Sections to be applied for the hull scantling and arrangement are given in Tab 1.

1.4.3 Other structure

The Sections to be applied for the scantling and arrangement of specific structures are given in Tab 2.

1.4.4 Systems

The Sections to be applied for the design and arrangement of systems are given in Tab 3.

Table 1 : Sections applicable for hull scantling

Part	Applicable Sections	
	General	Specific
Fore part	Ch 1, Sec 1 Ch 1, Sec 2 Ch 1, Sec 3 Ch 1, Sec 4 Ch 1, Sec 15	Ch 1, Sec 11
Central part		Ch 1, Sec 6 Ch 1, Sec 7 Ch 1, Sec 8 Ch 1, Sec 9 Ch 1, Sec 10
Aft part		Ch 1, Sec 12

Table 2 : Sections applicable for scantling of other structures

Item	Applicable Sections or Articles
Superstructures and deckhouses	Ch 1, Sec 13
Station keeping	Ch 1, Sec 14, [1]
Topside	Ch 1, Sec 14, [2]
Helicopter decks	Ch 1, Sec 14, [3]
Boat landing	Ch 1, Sec 14, [4]
Hull outfitting	Ch 1, Sec 14, [4]

Table 3 : Sections applicable to systems

Item	Applicable Sections
Access, openings, ventilation and venting of spaces in the storage area	Ch 1, Sec 16
Equipment and Safety Particulars	Ch 1, Sec 17
Piping	Ch 1, Sec 18
Use of process gas and crude oil as fuel	Ch 1, Sec 19
Swivels and risers	Ch 1, Sec 20

1.5 Structural requirements

1.5.1 Definition

Surface units are in principle similar to oil trading tankers, the main differences being in the following parameters:

- specific site as opposed to ocean trading
- towing or transit limited to voyage between the constructing shipyard and the intended site, and between different shipyards
- continuous loading and offloading operations at sea
- topsides facilities in continuous operations
- inspection, repair and maintenance at sea, with no dry-docking for the intended design life
- units permanently moored.

The related documentation is to be made available to the Society for reference.

1.5.2 Principles

Design loads and motions are to be evaluated, based on the following:

a) classification marks and notations

b) environmental conditions (transit/towing phases, site)

c) production effects (lightweight, loading cases).

When a navigation notation completes the site and/or transit notations (as defined in Pt A, Ch 1, Sec 2, [7]), the estimated loads and motions from the hydrodynamic analysis are to be compared to the rule values given for the granted navigation notation in order to determine the rule design loads and motions.

A Design Criteria Statement, as defined in [1.3.2], lists the services performed by the unit and the design conditions and other assumptions (including results of the hydrodynamic analysis) on the bases of which class is assigned to the unit.

Considering the design life with possible objective of no dry-docking during this period, accessibility for in-service inspections is to be considered during the detailed design phase.

1.5.3 Conversion, redeployment or life extension of existing units

As a rule, structural reassessment is mandatory in case of redeployment, life extension or conversion work of existing units or ships (see NI593).

A feasibility study is required for projects based on conversion of existing seagoing ships into units intended to have one of the notations given in [1.2.1].

As a minimum, complete re-measurements of the scantlings, including comprehensive surveys, are required to evaluate the condition of the unit.

1.5.4 Loads

The design of the structure is to consider the relevant loading conditions and associated loads, including:

a) still water conditions

b) extreme environmental conditions during unit operation (100-year wave)

c) offloading conditions

d) limiting conditions before the disconnection from a single point mooring, if relevant

e) conditions during maintenance or inspection operations

f) transit/towing conditions, from the construction/conversion location to offshore site and between the different construction shipyards, when relevant

g) loads induced by process and other equipment, in above conditions, as relevant

h) damaged conditions, in accordance with the provisions of Part B, Chapter 2 and Part B, Chapter 3, and taking into account the damage assumptions as given in Ch 1, Sec 2.

1.5.5 Hull attachments and appurtenances

Loads on the hull are to be clearly identified by the shipyard or the designer. All structures welded to the hull (such as major supports for topsides, flare tower, pipe rack and other hull appurtenances) should be considered regardless of the actual scope of Classification for these structures. Loads are to be indicated for operation, design, towing and damage conditions.

When attached structures and equipment are designed by an independent contractor, the Society may require the Owner to provide additional design analysis integrating the loads on attached structures and structure design of the hull, if not foreseen in design specification.

The attachments and appurtenances are within the scope of Classification if the supported equipment is either within the scope of Classification or essential for the safety of the unit. Otherwise, the interface between classed and non-classed parts is to be defined on a case-by-case basis.

1.5.6 Definition of ship areas

For the hull construction, and similarly to the approach for the design detailed in the present Rules, the shipbuilding practice, the industry and regulatory requirements and the Ship Rules (as defined in [3.2.6]) are the base references for the construction of the hull current parts, including materials, details, welding qualification, fabrication tolerances and inspection (see Ch 1, Sec 3, [2.3]). Any deviation from these standards is to be clearly documented on the construction drawings and in the specifications.

When the Ship Rules are applied for the design of the hull current parts, attention is to be paid to the loads specified in [1.5.4].

The Society reserves the right to require additional documentation for the design of ship structures like skeg, bilge, equipment supports, etc.

1.5.7 Definition of offshore areas

For the areas specific to offshore service, such as the elements listed in Ch 1, Sec 3, Tab 1, reference is made to Part B. More details are given in Ch 1, Sec 3, [2.2].

In case of conflict between the Ship Rules and the present Chapter, the latter one is to take precedence over the requirements of the Ship Rules.

1.6 Design life

1.6.1 The requirements about the design life, unit modifications and unit re-assessment are given in Pt A, Ch 1, Sec 1, [1.7].

1.7 Station keeping

1.7.1 General

The additional service features **POSA**, **POSA HR** and **POSA JETTY** cover the complete installation, from anchors or piles and their fixation in seabed to the fastening devices on the unit hull for mooring. The provisions for classification are given in NR493.

Note 1: Classification of the position mooring equipment is mandatory for permanent units.

The station keeping of the unit may be reached by different design configurations, which are subject to review, on a case-by-case basis:

a) The floating structure may use catenary, taut spread moorings and/or dynamic positioning systems. Mooring lines may be either combined into a turret base (SPM – Single Point Mooring) with a single point of contact to the hull of the floating unit, or connected to the hull in more than one position (spread mooring system).

b) The floating unit may be connected to a fixed tower using a pendulum link arrangement instead of the mooring hawser.

c) The mooring system may be based on use of the Catenary Anchor Leg Mooring (CALM) concept (pendulum link or rigid arm connection to the hull of the floating unit).

d) The floating structure may have an external or internal turret in the hull enabling the hull to weathervane (in particular for units positioned in severe environmental areas).

e) The floating structure may be moored permanently to a jetty.

The assessment of a mooring system requires evaluation of the unit motions, the resulting excursions and the line tensions, under specified environmental conditions.

The structural parts of the station keeping system are to comply with Part B, Chapter 2 and Part B, Chapter 3, in addition to the provisions of NR493.

When the station keeping of the unit is achieved by means of a turret, the turret structure and structures connecting the turret to the hull are to be designed in accordance with the provisions of Ch 1, Sec 14, [1.2].

When the station keeping of the unit is achieved by means of a spread mooring system, reference is made to Ch 1, Sec 14, [1.3].

1.7.2 Dynamic positioning systems

The mooring system may consist, either partly (combined with passive mooring systems as described in [1.7.1]) or entirely, in dynamic positioning systems, for which reference is made to the requirements given for additional class notation **DYNAPOS** in the Ship Rules, Pt F, Ch 11, Sec 6.

1.7.3 Mooring to buoy

The mooring of the floating unit may be realized through a buoy, which is a floating body, usually not manned, generally of a cylindrical shape, and fitted with mooring equipment as deemed necessary. Such buoy may also ensure the fluid transfer between the production and/or storage unit or the onshore installation and the moored floating unit.

The buoy, mooring system included, is to be classed by the Society. The additional service feature **POSA** is to be granted to the buoy.

The arrangement of the buoy is to comply with NR494, Rules for the Classification of Offshore Loading and Offloading Buoys.

1.7.4 Single Point Mooring

For mooring to an existing Single Point Mooring (SPM) (possibly classed by another Classification Society), detailed documentation of the SPM is to be submitted to the Society for review. This documentation is to include certificate, design and maintenance. The Society reserves the right to require complete re-classification of the installation, including remeasurement of lines and anchors.

1.8 Scope of additional class notations

1.8.1 Classed topsides - Notation PROC

The structure of topside modules supporting entirely the classed equipment is covered by class and is to be designed and built in accordance with the relevant requirements of Part B, Chapter 2 and Part B, Chapter 3.

When the additional class notation **PROC** is granted, the structure of deck modules, flare boom and other structures housing production equipment, as well as related facilities, are to be designed and built in accordance with the relevant requirements of Part B, Chapter 2 and Part B, Chapter 3.

When not subjected to green waters, and subject to the Society agreement, topsides structures may be designed following other recognized standards, provided due consideration is given to inertial loads, overall deformations of the unit, differential displacements of support points and other relevant loadings, in accordance with the provisions of Part B, Chapter 2.

1.8.2 Notation PROC not requested

When the additional class notation **PROC** is not requested, the structure of deck modules, flare boom and other structures housing production equipment are not covered by the classification.

For equipment and piping installations, where classed systems within the hull have some part of their facilities located within the topsides, these facilities are covered by the classification. The Society reserves the right to include in the scope of classification the structure of the supporting skid and its connection to the topside structure, even if this structure is mainly supporting production facilities.

The classification covers the equipment necessary to the proper operation of these systems, as requested by the Rules and other related applicable rules or standards.

Classification excludes all the equipment only necessary to the operation of the topsides systems. For these systems, upon receipt of specific information and request, the Society endeavours to verify that failure of equipment and systems external to the scope of classification does not impair significantly the hull installation. For the structure supporting classed equipment, the attending Surveyor verifies the proper fitting of the local supporting elements, as indicated by the equipment manufacturer.

Particular attention is to be paid to the design of the pipe rack on the main deck, which remains within the scope of classification, regardless of the presence of pipes serving the topsides process plants.

Fig 1 and show examples of classification limits for different types of appurtenances.

1.8.3 Riser attachment - Additional class notation RIPRO

The additional class notation **RIPRO** may be assigned to units fitted with risers meeting the requirement of Ch 1, Sec 20, [2].

In case the additional class notation **RIPRO** is not requested by the Owner, the classification is limited to the riser foundations securing the risers to the floating unit. Documentation of the estimated design loads is to be submitted to the Society for information.

As risers influence the anchoring system of the hull, the Society reserves its right to require appropriate documentation for the installation, the additional class notation **RIPRO** being or not being requested.

Equipment fitted onboard for the installation of risers are considered as outside the scope of classification unless requested by the Owner or unless an additional class notation for the lifting appliances is requested. The attachment of all equipment to the hull structure is covered by classification and it is to be documented that the resulting loads on the hull are based on breaking strength of the wires used during installation.

Figure 1 : Examples of classification limits

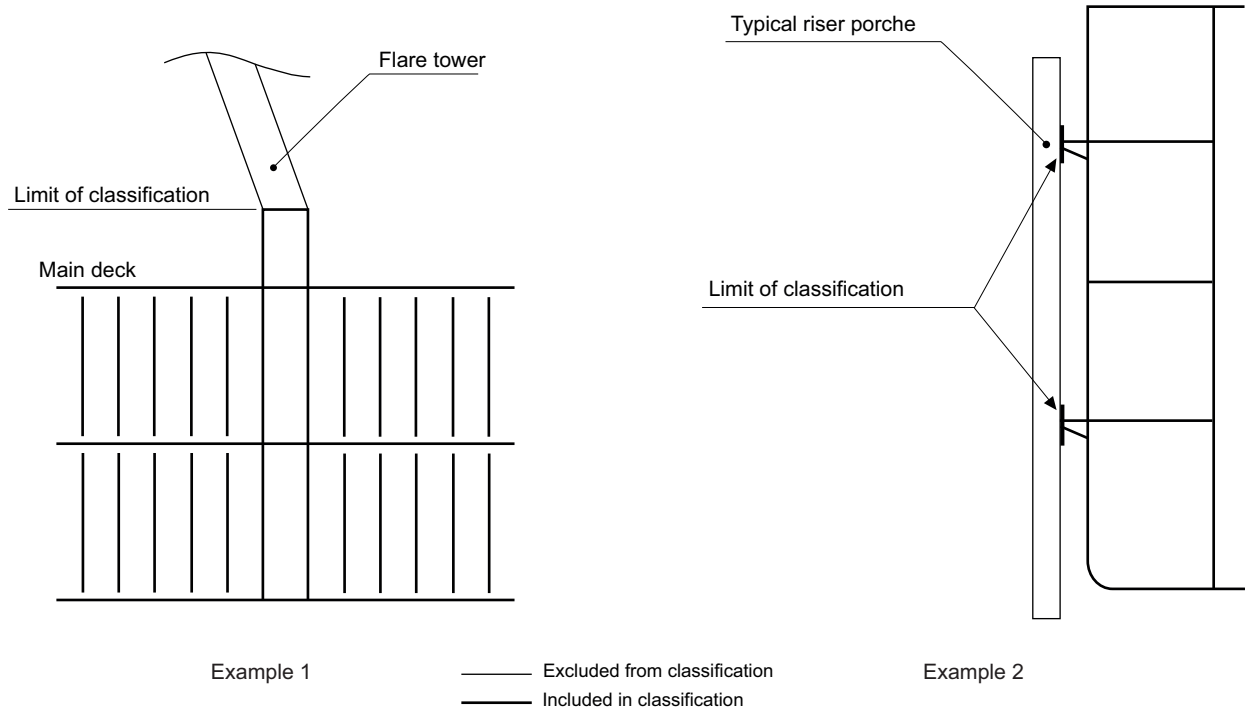

1.8.4 Lifting appliances - Additional class notations ALP and ALM

The additional class notations **ALP** and **ALM** may be assigned to units equipped with cranes and other lifting appliances meeting the relevant requirements of NR526, Rules for the Certification of Lifting Appliances onboard Ships and Offshore Units.

When no additional class notation for lifting appliances is granted, the classification covers only the crane pedestal and its foundation welded to the hull, considering the loads specified by the designer.

When the crane pedestal and its foundation are welded to a classed topside structure covered by the notation **PROC**, they are covered by class for the specific loads provided by the designer.

When one of the additional class notations **ALP** and **ALM** is granted and the crane pedestal is partially or completely supported by a topside structure not covered by class (notation **PROC** not requested), the crane pedestal and its foundation are not covered by class. In case the pedestal is connected to the topside structure and extended over the hull, only the part of pedestal connected to the hull is classed for the specific loads provided by the shipyard.

The structure calculation for the crane pedestal and its foundation is to be submitted to the Society for information if not requested otherwise for classification.

Note 1: For the additional class notations **ALP** and **ALM**, the construction mark as defined in Pt A, Ch 1, Sec 2 is required.

1.9 Classification and temporary conditions during construction

1.9.1 In accordance with the provisions of classification, any temporary conditions during fabrication, load out, intermediate towing/transit between two construction sites before complete finalisation of the unit and final load out of topside modules are considered beyond the scope of classification, unless specific demand has been received from the party applying for classification.

1.9.2 Corrosion protection systems are to be arranged for the hull during the outfitting phase. The documentation is to be submitted to the Society for information. The Society may require thickness measurements to be carried out prior to the hull leaving the yard.

1.10 Classification and towing/transit

1.10.1 General

The towing or sailing by means of own propulsion system, between the construction shipyard and the intended site, is covered by classification requirements. To flag the unit is:

- Recommended for the towing.
- Mandatory in international waters and when people is onboard. Attention is to be paid to the compliance with international codes and standards as required by National Authorities.

The Society issues a provisional certificate upon completion of the hull, with design criteria for towing/transit condition clearly identified.

1.10.2 Temporary conditions

Provisions for the temporary conditions during construction and transit are defined in [1.9.1].

1.10.3 Environmental conditions for towing/transit

The Society may require:

- detailed documentation for the intended route between the construction shipyard and the intended site, and
- further investigation of slamming loads, green waters, bow impact and ice loads, if any, depending on the severity of the intended route, the planned period of the year and duration for the towing.

Extreme loads for towing/transit are to be taken by default for a return period of 10 years (typically referred to as a probability level of $10^{-7,7}$). Different values may be considered if specified by the party applying for classification.

Limitations on sea heading (for avoidance of beam seas) including possible seasonal limitations are to be defined by the Owner and/or the party applying for classification.

1.10.4 Fatigue strength during towing/transit

The Society reserves the right to require, for structural members, a direct fatigue analysis resulting from the towing/transit. Such fatigue analysis is to be combined with the overall fatigue verification of the unit in operation at intended site.

1.10.5 Temporary mooring during towing/transit

The floating unit is to be equipped with temporary mooring (anchoring) equipment during the towing/transit operation. This equipment may be removed when the unit is permanently moored at the operation site.

2 Statutory requirements

2.1 General

2.1.1 Project specification

Prior to commencement of the review of drawings, the complete list of Regulations, Codes and Statutory Requirements to be complied with is to be submitted for information:

- International Regulations
- Flag State requirements
- Coastal State requirements
- Owner standards and procedures
- Industry standards.

The project specification is also to specify the list of statutory certificates requested by the Owner.

2.1.2 Conflict of Rules

In case of conflict between the present Rules and any Statutory Requirements as given by Flag State or Coastal State, the latter ones are to take precedence over the requirements of the present Rules.

2.2 International Convention on Load Lines

2.2.1 Application

Compliance with the Load Line Convention may be required by the Owner, the Flag State and/or the Coastal State.

The Load Line Convention is in general applicable to units having structural type and service notations as given in [1.2.1] for the towing phase. In case the unit has a flag once in service at site, application of the Load Line Convention may result in issuance of a Load Line Certificate.

Application of ILLC has an impact on the stability requirements (see Ch 1, Sec 2).

2.2.2 ILLC at site

The Society verifies that the maximum draught of the unit is equal to, or less than, the draught derived from the Load Line Convention requirements, as applicable to tankers.

2.3 MARPOL 73/78

2.3.1 Application

The Society recommends to apply the “Guidelines for application of the revised MARPOL Annex 1 requirements to FPSOs and FSUs” issued by IMO as document MEPC 139(53) and MEPC 142 (54).

2.4 SOLAS

2.4.1 Application

Attention is drawn to the fact that SOLAS requirements may be applicable to the units covered by the present Rules, at the request of competent authorities.

The provisions of the present Rules do not cover all the SOLAS requirements.

2.5 IMO MODU

2.5.1 Application

Compliance with MODU may be required by the Owner, the Flag State and/or the Coastal State.

The Society reserves the right to refer to MODU requirements for fire-fighting equipment of the helideck installation.

3 Symbols and definitions

3.1 General

3.1.1 Unless otherwise specified, the units, symbols, definitions and reference co-ordinate system given in Pt B, Ch 1, Sec 3 of the Ship Rules remain applicable.

3.2 Definitions

3.2.1 Floating production units

A floating production unit (FPU) is a unit fitted with processing equipment necessary to perform basic treatment (de-watering, degassing, gas compression, etc.) of hydrocarbons received from wells.

3.2.2 Floating storage units

A floating storage unit (FSU) is a surface unit intended for the storage in bulk of liquid cargoes as defined in [3.2.14].

3.2.3 Floating storage and offloading units

A floating storage and offloading unit (FSO) is a unit fitted with equipment for offloading stored hydrocarbons by shuttle tankers, moored alongside or in tandem mode.

Note 1: Export may alternatively be performed by an export flowline leading to another offshore installation (e.g. a loading buoy).

3.2.4 Floating production, storage and offloading units

Production and storage installations may be combined into floating production and storage units (FPSU) or into floating production, storage and offloading units (FPSO).

3.2.5 Station keeping

A floating production and/or storage unit may be kept in position by means of either:

- a single point mooring at which the unit is moored or articulated, or
- an independent anchoring system, or
- a dynamic positioning system.

When provided, the anchoring system may consist in a spread mooring system or a turret system.

The mooring system may be a disconnectable system, e.g. for units located in typhoon areas, which have kept their ship propulsion and steering appliances and are able to sail the way in case of typhoon, or for units located in iceberg lanes.

An auxiliary propulsion system (thruster) may be fitted, e.g. to assist weathervaning or to provide a minimum manoeuvrability to the unit, when disconnected.

3.2.6 Rule length

For surface units, the rule length L is determined, for transit and site conditions, similarly to seagoing oil tankers (see the Ship Rules).

In case of units without rudder shaft, the rule length L is to be taken equal to 97% of the extreme length at the maximum draught.

The extreme length at the maximum draught is not to include external turret system or boat landing platforms possibly attached to the extreme ends.

3.2.7 Depth

The depth D is the distance, in m, measured vertically on the midship transverse section, from the moulded base line to the top of the deck beam at side on the uppermost continuous deck.

3.2.8 Fore and aft parts

The fore and aft parts are determined on a case-by-case basis, according to the main wave heading.

For units articulated around a single point mooring, the fore part is the part next to this single point mooring.

During transit, the fore part is the one orientated in the direction of towage.

3.2.9 Hull and superstructures

The hull is a barge shaped floating structure with overall dimensions in accordance with Pt B, Ch 1, Sec 2, [1.2] of the Ship Rules. The purpose is to store oil (if applicable), ballast and production liquids. In addition, dedicated machinery spaces are provided for essential generators, etc.

The hull includes:

- The living quarters, which are to be designed and built in accordance with the relevant requirements for "superstructures" given in Ch 1, Sec 13.
- The supports for pertinent features of hull structure design, named "attachments and appurtenances" in these Rules, as, for example, hull topsides supports and foundations. The interface point is the bearing and sliding supports of the topside modules.

3.2.10 Topsides

A topside structure is usually an independent structure located on the deck of the floating unit (typically the freeboard and strength deck). Depending on the supporting arrangement, provisions are to be taken for possible effects of longitudinal stress and deformation from hull girder in the topsides structure. Topsides equipment may contain essential marine systems which are within the scope of classification. The Society may require detailed documentation for information.

The topsides are usually arranged into modules to ease fabrication and installation, and to reduce impact from longitudinal stress in hull girder of the floating unit.

3.2.11 Site draughts

The draught is the distance, in m, from the base line to the waterline, measured amidships.

The maximum site draught is the deepest draught able to be observed during operation.

The minimum site draught is the lightest draught able to be observed during operation.

3.2.12 Transit draughts

For any transit phase, a maximum draught and a minimum draught are to be determined by the designer and reflected in the associated loading conditions.

3.2.13 Splash zone

The "splash zone" is the zone of the floating structure which is alternately in and out of water due to wind, waves and motions. Areas which are wetted only in case of major storms are excluded from the splash zone.

The exact location and vertical extent of the splash zone are to be determined at the design stage as a function of the environmental conditions at the intended site.

Unless otherwise indicated by the designer, the splash zone is usually considered as extending from 3 m below the lowest operational draught up to 5 m above the maximum loaded draught.

Corrosion in the splash zone during service is to be prevented by means of protective coating systems and/or corrosion margins and thickness increments of the plating.

3.2.14 Cargo

For the application of this Chapter, cargo means all the oil-like liquids in relation with the drilling and process (production) operations and includes also all the flammable liquids having a flash point of less than 60°C stored in bulk in cargo tanks of the unit.

3.2.15 Corrosion addition

The corrosion addition is the thickness to be added to the net thickness in view of corrosion allowance, as defined in Ch 1, Sec 3, [7].

3.2.16 Thickness increment

The thickness increment is the thickness that may be added to the gross thickness, in accordance with Ch 1, Sec 3, [8].

3.2.17 Manned end

The manned end is the end of the unit where accommodation is located.

3.2.18 Production equipment

Throughout the present Chapter, production equipment means equipment (piping and accessories, valves, pumps, pressure vessels, etc.) containing or liable to contain hydrocarbon products under treatment, excluding transfer from these production installations.

3.2.19 Cargo pump room

A cargo pump room is a space containing pumps and their accessories for the handling of cargo.

3.2.20 Pump room

A pump room is a space, possibly located in the storage area, containing pumps and their accessories for the handling of ballast and oil fuel, or other supplies, cargo being excluded.

3.2.21 Void space

A void space is an enclosed space in the storage area external to a cargo tank, except for hold space, cargo pump room, pump room, or any space normally used by personnel.

3.2.22 Other spaces

For definition of other spaces, refer to Part C, Chapter 4.

3.2.23 Independent piping system

An independent piping system is a piping system for which no potential connection to other piping systems is available.

3.2.24 Separate piping system

A separate piping system is a piping system which is not permanently connected to another piping system. This separation may be achieved by detachable spool pieces and valves and suitable blind flanges, or two spectacle flanges arranged in series with means between the two spectacles flanges to detect leakage.

Operational separation methods are normally not to be used within a cargo tank.

3.2.25 Process tank

A process tank is an internal tank used in the hydrocarbon production and processing systems which may contain a highly corrosive mixture of oil, gas, water, mud and chemicals.

3.2.26 Cargo area

The cargo area is that part of the unit which contains cargo tanks, slop tanks, process tanks, cargo pump rooms, cofferdams, ballast and void spaces adjacent to cargo tanks as well as deck areas throughout the entire length and breadth of the unit above the mentioned spaces.

For the purpose of the present Chapter, cargo area and storage area have the same meanings (see [3.2.27]).

3.2.27 Storage area

For the purpose of the present Chapter, storage area and cargo area have the same meanings (see [3.2.26]).

3.3 Reference co-ordinate system

3.3.1 The ship geometry, motions, accelerations and loads are defined with respect to the following right-hand co-ordinate system (see Fig 2):

- Origin: at the intersection between the ship longitudinal plane of symmetry, the aft end of L and the baseline
- X axis: longitudinal axis, positive forwards
- Y axis: transverse axis, positive towards portside
- Z axis: vertical axis, positive upwards.

Positive rotations are oriented in anti-clockwise direction about the X, Y and Z axes.

Figure 2 : Reference co-ordinate system

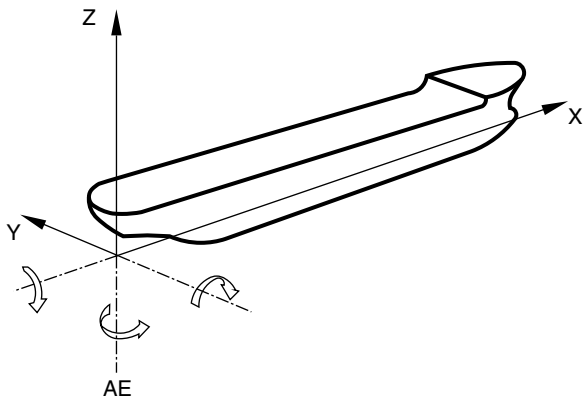

4 Calculations

4.1 Calculations to be submitted

4.1.1 Procedures

Procedures and assumptions used for structural and hydrodynamic calculations requested by the Rules are to be submitted to the Society for review prior to submission of final report with conclusions of the analysis.

The following calculations are to be submitted:

- Hydrodynamic calculations:
  - direct calculation report
  - model test report and calibration report, if relevant.
- Finite element calculations:
  - primary supporting members of cargo tanks
  - topside supports
  - turret supports
  - spread mooring seats
  - fatigue structural details
  - topsides, when **PROC** notation is granted
  - spectral fatigue when **Spectral Fatigue** notation is granted.
- Additional calculation reports are recommended and should be submitted for information when they are performed:
  - dropped object analysis procedure
  - collision analysis procedure
  - explosion analysis procedure.
- Calculation of design temperature of structural elements, if relevant (see Ch 1, Sec 3).

Detailed documentation of software used, demonstrating calculation accuracy, may be requested by the Society.

4.1.2 Calculation report

The calculation report is to follow the procedure as described and agreed to, prior to commencement of the study. Input data, considerations for decision of boundary conditions and detailed stress results are to be available.

Finite element models usually consist of plate elements. Normal and shear stresses are usually obtained in the centre of the element and stress plots are to show element stresses and not a node average.

Graphically, information for several loading conditions is to show deformation of structure and Von Mises stress values.

5 Design criteria and data

5.1 General

5.1.1 The party applying for classification is to provide the Society with the classification data and assumptions.

Relevant information is entered in the Design Criteria Statement.

5.2 Site data

5.2.1 The party applying for classification is to specify the site at which the unit will operate, and is to provide relevant design data and background information.

Note 1: Units intended to operate on several sites or units not being permanent installations are specially considered.

5.3 Operating loading conditions

5.3.1 General

The data on unit operation are to include the information required from [5.3.2] to [5.3.5].

5.3.2 Cargoes and processed products

Characteristics of processed hydrocarbons and cargoes intended to be stored (in particular H_2S content).

5.3.3 Environmental conditions

a) Extreme environmental conditions during unit operations.

b) Most severe environmental conditions, if relevant, during offloading operations towards a shuttle tanker, moored alongside or in tandem mode.

c) Limiting conditions before disconnection from the single point mooring, if relevant.

d) Most severe environmental conditions, if relevant, during maintenance operations such as dismantling of main bearings of connection with the single point mooring.

e) Environmental conditions during towing/transit from construction/conversion location to offshore site, when not covered by a navigation notation.

5.3.4 Loads

a) Loads induced by connection to a Single Point Mooring, if any, in all relevant conditions detailed in [5.3.3], including:
   - loads in bearings, in case of arm and yoke connections
   - loads on secondary bearings during maintenance operations.

b) Hawser loads, in case of connection by a hawser.

c) Maximum loads induced by shuttle tankers.

d) Loads induced by process and other equipment.

5.3.5 Loading conditions

The following loading conditions are to be considered:

a) loading conditions in normal operations, including distribution of stored hydrocarbon, ballast, stores and others, for the full sequence of loading-unloading of the unit

b) loading conditions in any other particular condition of operation, such as light ballast, or tank cleaning/inspection, and related limiting conditions for environment

c) loading condition for towing/transit.

Note 1: For control of loadings during operations, refer to Ch 1, Sec 5, [2.3].

6 Documentation to be submitted

6.1

6.1.1 The documentation to be submitted is to include the following information, in addition to the documentation required in Part A, Chapter 1:

a) Design criteria and data, as defined in Article [5]

b) Data for hydrodynamic analysis:
   - lines plan and appendices on hull
   - environmental data as required in Pt B, Ch 2, Sec 2
   - properties of the unit related to the assessment of wind and current loads (areas, coefficients), when a heading analysis is performed (see Ch 1, Sec 4)
   - properties of mooring system and relevant information
   - loading manual with description of each loading condition

c) General drawings:
   - general arrangement of the unit, showing, as relevant:
     - location of the storage tanks with their openings, ballast tanks, cofferdams and void spaces, accesses to hazardous and safe spaces, cargo storage, production piping and vent piping on the open deck, bow or stern transfer lines, etc.
     - general arrangement of process, utility and control spaces
     - general arrangement of risers, riser supports and manifolds
   - general arrangement of hazardous areas
   - flare radiation level plots
   - arrangement of the fore and aft spaces
   - general arrangement of the mooring system, or SPM connection

d) Structural drawings, specifications and supporting documents:
   - booklet of loading conditions
   - mooring systems foundations (fairleads, tensioners, winches, bollards, etc.), where applicable
   - connections and supporting structure for floating units connected to a single point mooring by an arm or a yoke
   - turret structural and mechanical drawings
   - riser supports
   - foundations of deck modules and flare, if any, together with the corresponding loads
   - deck modules, as relevant
   - flare structure
   - specification of coatings and drawings of cathodic protection, including hull outside and tank inside, with drawings of anode securing devices

e) Machinery and piping drawings:
   - oil and gas processing plant (general arrangement, PID)
   - cargo offloading equipment
   - gas disposal system
   - diagram of cargo and gas piping systems, including offloading piping

- connections to risers
- diagram of stripping system for cofferdams, pump rooms and other spaces within the storage area
- diagram of cargo tank vent systems
- specification of pumps, valves, expansion joints and other cargo piping fittings
- drawing of cargo pump shaft stuffing boxes at bulkhead penetrations
- arrangement of gastight bulkhead penetrations
- bilge and drainage systems for hazardous areas
- ballast pumping within storage area
- remote control of cargo and ballast pumping systems
- specifications and drawings of cargo hoses
- cargo tank heating system
- crude oil tank washing systems, together with specification of equipment
- arrangements for gas-freeing of cargo tanks
- drawings of product swivels
- drawings of electrical swivels
- arrangements for venting cargo tanks, including specification of venting fittings
- pressure-vacuum valves
- arrangement and capacity of air ducts, fans and motors in storage area, together with justification of their anti-sparking properties
- rotating parts and casings of fans
- level-gauging arrangements, including drawings and specifications
- emergency shut-down system
- remote control and monitoring systems, including specifications of instrumentation
- arrangement of instrumentation in control stations

f) Inert gas installations:
- single-wire diagram of the installation, together with the following main characteristics: capacity, pressure, temperature, O_2 content, water content
- list of the components (with their characteristics) of: pipes, scrubber, blowers, non-return devices, valves, pumps, protective devices for overpressure and vacuum
- general arrangement plan of installations on board
- diagram of monitoring and alarm systems
- specifications of O_2 analyser, recorder and portable control instruments

g) Safety plans:
- drawing and specification of fire and gas detection systems
- fire protection details in accommodation areas
- pressure water fire main
- fire extinguishing systems in machinery and accommodation areas
- foam extinguishing systems within storage area: general arrangement diagram, calculation note, foam agent specification, characteristics of foam monitors and hoses
- fire-extinguishing system in cargo pump rooms: general arrangement plan and calculation note
- fire-extinguishing system in process areas

h) Others:
- documents relevant to contemplated additional class notations, as specified in the Rules.

Section 2 Subdivision and Stability

1 General

1.1 Application

1.1.1 The present Section defines the subdivision and stability requirements, with respect to risks of capsizing or risks of pollution of the sea for units covered by the present Chapter (see Ch 1, Sec 1, [1.2.1]) and intended to receive the service notation **oil storage**.

1.1.2 Units covered by the present Chapter but not intended to receive the service notation **oil storage** are to comply with the requirements of Part B, Chapter 1 instead of the present Section.

2 Stability

2.1 Free surface effect

2.1.1 General

The free surface effects of partially filled tanks are to be taken into account in the stability calculations. Filling restrictions entered in the operating manual are to be given special consideration by the Society.

Free surface effects are to be considered whenever the filling level in a tank is less than 98% of full condition. Free surface effects need not be considered where a tank is nominally full, i.e. filling level is 98% or above.

Nominally full cargo tanks should be corrected for free surface effects at 98% filling level. In doing so, the correction to initial metacentric height should be based on the inertia moment of liquid surface at 5° of the heeling angle divided by displacement, and the correction to righting lever is suggested to be on the basis of real shifting moment of cargo liquids.

In calculating the free surfaces effect in tanks containing consumable liquids, it is to be assumed that for each type of liquid at least one transverse pair or a single centreline tank has a free surface and the tank or combination of tanks taken into account are to be those where the effect of free surface is the greatest.

2.1.2 Gutter bars

Where gutter bars are provided on the cargo tank deck in order to avoid the spillage of flammable liquids, as required by Ch 1, Sec 16, [1.7], the free surface effect caused by containment of cargo spill, boarding seas or rain water is to be considered with respect to the vessel's available margin of positive initial stability (GMo).

Gutter bars are not to be accepted without an assessment of the initial stability (GMo) for compliance with the relevant intact stability requirement taking into account the free surface effect caused by liquids contained by the gutter bars.

2.1.3 Documentation to be submitted

A stability file is to be submitted by the Owner or its representative. It has to include line plans, capacity plans, justification of lightship characteristics, definitions of loading conditions, damage stability booklet, etc.

2.2 Intact stability

2.2.1 General

The requirements of Pt B, Ch 3, Sec 2 of the Ship Rules concerning the intact stability are to be complied with. In addition, the following requirements are applicable:

a) For inclining test and lightweight check:

The unit is to comply with the requirements of Pt B, Ch 3, App 1 of the Ship Rules.

b) For trim and stability booklet:

The information that is to be included in the trim and stability booklet is given in Pt B, Ch 3, App 2, [1.1] of the Ship Rules.

The loading conditions to be checked are given in [2.2.2].

c) In addition to the requirements of Pt B, Ch 3, Sec 2 of the Ship Rules, the criteria of Pt D, Ch 7, Sec 3, [2.2] of the Ship Rules are to be complied with.

2.2.2 Loading conditions

The following conditions are to be submitted:

- Lightship condition.
- Transit/towing condition.

- Selected operational loading conditions covering foreseen fillings of the cargo tanks. One of the conditions must correspond to the maximum draught.

  For the assignment of a tropical freeboard, the corresponding loading condition has also to be submitted.
- Loading conditions for inspection of the cargo tanks, where one or two consecutive cargo tanks are empty (to be consistent with operational practice).

2.3 Damage stability

2.3.1 General

The unit is to comply with the requirements of Pt D, Ch 7, Sec 3, [2.3] of the Ship Rules which are similar to the ones in MARPOL.

However the extent of damage given in Pt D, Ch 7, Sec 3, Tab 1 of the Ship Rules is not fully applicable. The Table is to be replaced by the prescriptions given in [2.3.2].

2.3.2 Extent of damage

For the units covered in the present Chapter, the extent of damage on the bottom is disregarded.

The assumed extent of damage on the side shell is to be as follows:

- Longitudinal extent l_c:

  $l_c = 1/3\ L_{LL}^{2/3}$ or 14,5 m, whichever is the lesser

  where:

  L_{LL} : Load line length, in m, as defined in Pt B, Ch 1, Sec 3, [2.1.2] of the Ship Rules.
- Transverse extent t_c measured inboard from the side shell plating, at right angle to the centreline, at the level of summer load line:

  $t_c = B/5$ or 11,5 m, whichever is the lesser.

  B : Moulded breadth, in m, as defined in Pt B, Ch 1, Sec 3, [2.1.4] of the Ship Rules.
- Vertical extent v_c, from the moulded line of the bottom shell plating at centreline: upwards without limit.

2.3.3 Type A freeboard

For units assigned with a type A freeboard, the requirements of Pt B, Ch 3, App 4 of the Ship Rules, which are similar to the ones in ILLC 66, are also to be complied with.

3 General arrangement

3.1 General

3.1.1 The requirements of this Article are additional to, or replace, in case of conflict, those of Part C, Chapter 4.

3.2 Cargo tanks

3.2.1 Segregation requirements

Cargo tanks and slop tanks are to be segregated from accommodation, service and machinery spaces, drinking water and stores for human consumption by means of a cofferdam, or any other similar space.

3.2.2 Ends of storage area

A cofferdam or similar compartment is normally to be provided at both ends of the storage area. Such a cofferdam is to be bounded by oil-tight bulkheads 760 mm apart as a minimum and extending from keel to deck across the full breadth of the unit.

3.2.3 Double bottom

Double bottoms adjacent to cargo oil tanks are not to be used as oil fuel bunkers.

3.2.4 Arrangement of tanks

The size and arrangement of cargo tanks and ballast tanks located in the storage area are to comply with the applicable provisions of Article [2].

3.2.5 Fore and aft peaks

Cargo is not to be loaded in fore or aft peaks.

3.3 Location and arrangement of spaces adjacent to storage area

3.3.1 Machinery spaces

All machinery spaces are to be separated from cargo and slop tanks by cofferdams, cargo pump rooms, oil fuel bunkers or permanent ballast tanks.

However, the lower portion of the pump room may be recessed into the machinery spaces of category A to accommodate pumps provided that the deck head of the recess is in general not more than one third of the moulded depth above the keel. In the case of units of not more than 25000 tonnes deadweight, where it can be demonstrated that for reasons of access and satisfactory piping arrangement this is impracticable, the Society may permit a recess in excess of such height, but not exceeding one half of the moulded depth above the keel.

Note 1: Pump-rooms intended solely for ballast transfer need not comply with the requirements of Ch 1, Sec 16, [1.2]. The requirements of Ch 1, Sec 16, [1.2] are only applicable to the pump-rooms, regardless of their location, where pumps for cargo, such as cargo pumps, stripping pumps, pumps for slop tanks, pumps for COW (Crude Oil Washing) or similar pumps are provided.

"Similar pumps" includes pumps intended for transfer of fuel oil having a flashpoint of less than 60°C. Pump-rooms intended for transfer of fuel oil having a flashpoint of not less than 60°C need not comply with the requirements of regulation Ch 1, Sec 16, [1.2].

3.3.2 Ballast pump rooms

Pump rooms containing pumps and their accessories for the handling of ballast for spaces adjacent to cargo tanks and slop tanks and pumps for fuel oil transfer may be considered as equivalent to a cargo pump room for the application of [3.3.1] and Ch 1, Sec 16, [1.4], provided that such pump rooms fulfil the safety requirements applicable to cargo pump rooms.

The lower portion of pump rooms may be recessed into category A machinery space to accommodate pumps, provided that the deck head of the recess is not more than one third of the moulded depth above the keel.

3.3.3 Process and utility

Process and utility spaces may be located above main deck in the storage area.

Utility and control spaces, and other enclosed spaces, which are not themselves hazardous areas, are to be separated from deck by a distance of 3 m minimum, or by a cofferdam.

3.3.4 Accommodation, control and service spaces

Accommodation spaces, main cargo oil control stations, control stations and service spaces (excluding isolated cargo handling gear lockers) are to be positioned outside the storage area and cofferdams or other spaces (crude oil pump rooms, oil fuel bunkers or permanent ballast tanks) considered as equivalent isolating cargo oil or slop tanks from machinery spaces.

Note 1: A recess provided in accordance with [3.3.2] need not be taken into account when the position of these spaces is being determined.

3.4 Cargo pump rooms

3.4.1 Glazed ports in bulkheads

a) The cargo pump rooms are to be separated from the other spaces of the unit by oil tight bulkheads and are not to have any direct access to the machinery spaces.

b) Glazed ports can be provided in the bulkhead separating the cargo pump room from machinery spaces provided they satisfy the following conditions:
   - they are to be sufficiently protected from mechanical damage
   - strong covers are to be permanently secured on the machinery compartment side
   - glazed ports are to be so constructed that glass and sealing are not damaged by any deformations of the unit
   - the glazed ports are to be so constructed as to maintain the structural integrity and the bulkhead resistance to fire and smoke.

3.4.2 Bulkhead penetrations

The number of penetrations through the bulkhead separating the cargo pump room from the machinery spaces is to be kept to a minimum.

Any penetration through bulkheads or decks bordering the cargo pump room is to be of a type approved by the Society.

3.5 Drainage arrangements and slop tanks

3.5.1 Drainage arrangements

Drainage arrangements for safe areas are to be entirely separate and distinct from drainage arrangements from hazardous areas.

3.5.2 Deck spills

Means are to be provided to keep deck spills away from the accommodation and service areas. This may be accomplished by providing permanent continuous coaming of a suitable height extending from side to side.

3.5.3 MARPOL Convention

The attention of the Designer is drawn to the fact that the arrangements for the storage on board a unit, and the disposal of bilge and effluent from the production spaces are subject, outside the scope of classification, to requirements of the appropriate National Authority, in application of the MARPOL Convention.

3.5.4 Slop tanks

Slop tanks, where fitted in pump rooms, are to be of a closed type, air and sounding pipes being led to the open deck.

3.6 Ballasting of double bottom and narrow tanks

3.6.1 It is recommended to provide suitable arrangement for ballasting double bottom tanks and double hull tanks within storage area, if any, and cofferdams and other void spaces contiguous to storage tanks, in order to facilitate gas-freeing of such compartments.

3.7 Collision bulkhead

3.7.1 A collision bulkhead is to be provided, when necessary, to prevent flooding during transit and/or site conditions. The collision bulkhead is to comply with the requirements of the Ship rules.

3.7.2 Subject to the agreement of the flag Administration, if any, the Society may accept an exemption from having a collision bulkhead when the risk of collision is mitigated and duly justified (collision analysis, external turret, damage stability ...).

3.7.3 Subject to the agreement of the flag Administration, if any, the Society may , on a case by case basis, accept a distance from the collision bulkhead to the forward perpendicular FP_{LL} greater than the maximum specified in the Ship rules, provided that subdivision and stability calculations show that, when the unit is in upright condition on full load draft, flooding of the space forward of the collision bulkhead will not result in any part of the freeboard deck becoming submerged, or in any unacceptable loss of stability.

3.8 Aft peak bulkhead

3.8.1 General

As a rule, offshore units are to be provided with an aft peak bulkhead in accordance with the Ship rules, except when the risk of collision is mitigated and duly justified (collision analysis, external turret, damage stability...).

Section 3 Structure Design Principles

Symbols

b_f : Face plate width, in mm, of an ordinary stiffener or a primary supporting member, as the case may be

D : Depth of the unit, in m, as defined in Ch 1, Sec 1, [3.2.7]

E : Young's modulus, in N/mm², to be taken equal to:

- for steels in general: $E = 2{,}06 \cdot 10^5$ N/mm²
- for stainless steels: $E = 1{,}95 \cdot 10^5$ N/mm²
- for aluminium alloys: $E = 7{,}0 \cdot 10^4$ N/mm²

h_w : Web height, in mm, of an ordinary stiffener or a primary supporting member, as the case may be

I : Net moment of inertia, in cm⁴, of an ordinary stiffener or a primary supporting member, as the case may be, with attached plating, around its neutral axis parallel to the plating (see Fig 3, c), d))

ℓ : Span, in m, of an ordinary stiffener or a primary supporting member, as the case may be, measured between the supporting members (see Fig 3)

ℓ_b : Length, in m, of brackets (see Fig 11)

L : Rule length, in m, as defined in Ch 1, Sec 1, [3.2.6]

s : Spacing, in m, of ordinary stiffeners or primary supporting members, as the case may be

t_C : Rule corrosion addition, in mm, see Article [8]

t_f : Net face plate thickness, in mm, of an ordinary stiffener or a primary supporting member, as the case may be

t_p : Net thickness, in mm, of the plating attached to an ordinary stiffener or a primary supporting member, as the case may be

t_w : Net web thickness, in mm, of an ordinary stiffener or a primary supporting member, as the case may be

w : Net section modulus, in cm³, of an ordinary stiffener or a primary supporting member, as the case may be, with attached plating of width b_p

w_G : Gross section modulus, in cm³, of ordinary stiffeners

w_N : Net section modulus, in cm³, of ordinary stiffeners.

1 Definition of ship areas and offshore areas

1.1 Principles

1.1.1 General

Following analysis of the stress level in the structure and design environment, the Society may categorize some of the areas as "ship areas" or as "offshore areas".

Elements and types of areas are listed in Tab 1.

The Society reserves its right, according to appropriate structural analyses, to declare other elements as belonging to offshore areas.

1.1.2 Offshore area requirements

Offshore areas listed in Tab 1 are to be in accordance with the requirements of Part B:

a) Concerned areas are to include the part of the ship structure affected by the loads on listed elements.

b) Structural elements contributing to the longitudinal strength of the hull girder are also to comply with strength requirements for ship areas (see [1.1.3]).

1.1.3 Ship area requirements

Ship areas listed in Tab 1 are to be in accordance with the present Chapter except where specific requirements of the Ship Rules are requested in it.

In case of conflict between the Ship Rules and the present Chapter, the most severe is to take precedence.

Table 1 : Types of areas

Elements	Area
Flare tower supports	Offshore area
Turret moon pool, casing, and surrounding area	
Topsides supports at main deck	
Crane pedestals and foundation into hull	
Helideck support structure	
Mooring supports	
Hose handling crane pedestal and foundation into hull	
Offloading equipment foundations	
Riser porches and their foundations to the hull	
Foundations of riser and mooring lines tensioning systems	
Towing brackets and their foundations	
Other elements	Ship area

1.1.4 Limits between ship areas and offshore areas

The offshore areas always include the following items:

- the foundations of modules and equipment defined in Tab 1 and their additional local structural members
- the inserts in primary supporting members, decks, bulkheads and side shell
- the reinforced longitudinal stiffeners
- the partial stringers, deck girders and web frames.

For other members and when the limits of offshore area is not obvious from engineering judgment, the offshore area is to be extended up to a distance where the equivalent membrane stress is lower than 30 MPa when only appurtenance forces are applied.

1.1.5 Structural categories for offshore areas

Offshore areas are divided into three categories (special, first and secondary) for the structural members.

These categories are defined in Pt B, Ch 3, Sec 2, [2].

Components in load transmission areas and contributing to the load path, including stiffener brackets, flanges etc., are to be categorized as first or special category area.

In principle, topside supports are to be categorized as first category elements with the highly stressed area as special category element.

The helideck structure is considered as first category element.

2 Materials and testing

2.1 Design temperature

2.1.1 For the purpose of steel grade requirements stated in [2.2] and [2.3], the design temperature of structural elements is to be calculated as required in Pt B, Ch 2, Sec 2, [6].

2.2 Offshore areas

2.2.1 General

The steel grade of elements belonging to offshore areas, as defined in [1.1.1], is to be determined in accordance with the requirements of Pt B, Ch 3, Sec 2.

2.2.2 Secondary category elements

The steel grades of structural elements categorized as secondary category are to comply with the most stringent between:

- Pt B, Ch 3, Sec 2 or
- Pt B, Ch 4, Sec 1 of the Ship Rules.

2.3 Ship areas

2.3.1 The steel grade of elements belonging to ship areas as defined in [1.1.1], is to be chosen in accordance with Pt B, Ch 4, Sec 1 of the Ship Rules.

2.4 Steels with specified through thickness properties

2.4.1 The steels with specified through thickness properties are to comply with the requirements in Pt B, Ch 3, Sec 2, [4]

2.5 Inspection and checks

2.5.1 General

Materials, workmanship, structures and welded connections are to be subjected, at the beginning of the work, during construction and after completion, to inspections by the Shipyard suitable to check compliance with the applicable requirements, approved plans and standards.

The manufacturer is to make available to the attending Surveyor a list of the manual welders and welding operators and their respective qualifications.

The manufacturer's internal organisation is responsible for ensuring that welders and operators are not employed under improper conditions or beyond the limits of their respective qualifications and that welding procedures are adopted within the approved limits and under the appropriate operating conditions.

The manufacturer is responsible for ensuring that the operating conditions, welding procedures and work schedule are in accordance with the applicable requirements, approved plans and recognized good welding practice.

2.5.2 Inspection of ship areas

For parts of the structure defined as ship areas, the requirements given in Pt B, Ch 13 of the Ship Rules are to be applied.

Prior to construction start, the constructing shipyard is to propose a recognized standard for approval.

The Society reserves the right to increase the number of non destructive examinations due to complexity of the structure compared to seagoing ships and with particular attention to the intended service.

2.5.3 Inspection of offshore areas

For parts of the structure defined as offshore areas, reference is to be made to NR426 Construction Survey of Steel Structures of Offshore Units and Installations.

The Society reserves the right to increase the number of non destructive examinations due to complexity of the structure and with particular attention to the intended service.

3 General structural principles

3.1 Accessibility for inspection during service

3.1.1 Principle

Accessibility for inspection, and also for maintenance, is required with respect to the durability and integrity of the structure.

3.1.2 Underwater parts

When the additional class notation **INWATERSURVEY** is granted to the units, special constructional features are to be provided as defined in Pt A, Ch 2, Sec 8, [2.2].

For underwater parts, marking and arrangements to facilitate inspections are to be provided. Marking is to be steel plate welded and painted.

Draught marks are to be provided at both sides at aft end, midship and bow.

Marks and identifying photographs shall be provided for orienting the diver (and submitted in copy to the Society for information). These shall include specific areas of plating, including locations of bulkheads and tanks, boundaries, sea chests (intake tubes), sea suction and discharge openings. Individual connections inside the sea chest (tube) are also to be identified.

Detailed drawings of the hull and hull attachments below the waterline are to be submitted to the Society for review.

3.1.3 Means of access

Each space within the unit is to be provided with permanent means of access in accordance with Pt B, Ch 3, Sec 1, [4].

The means of access in the hull are to allow inspection of the critical structure connections identified during the drawing review by the Society and/or the designer.

Inaccessible areas are to be clearly identified on structural drawings. The number of inaccessible areas is to be limited. The Society reserves the right to establish additional requirements related to corrosion protection of these areas. Special attention is to be paid to fatigue strength.

Web frame numbers shall be attached to structure or walkway inside of tanks to the satisfaction of the attending Surveyor.

Equipment on deck should be arranged to allow inspections of the deck plating and to avoid permanent concentration of dust and remaining water.

Complex areas like turret, riser porches, etc., must also be accessible for inspection.

3.2 General construction

3.2.1 Typical arrangement

Large openings in web frames and stringers should be verified and necessary documentation / calculation notes are to be submitted to the Society.

As a guidance, two typical transverse structural configurations are shown in Fig 1.

Figure 1 : Typical transverse structural configurations

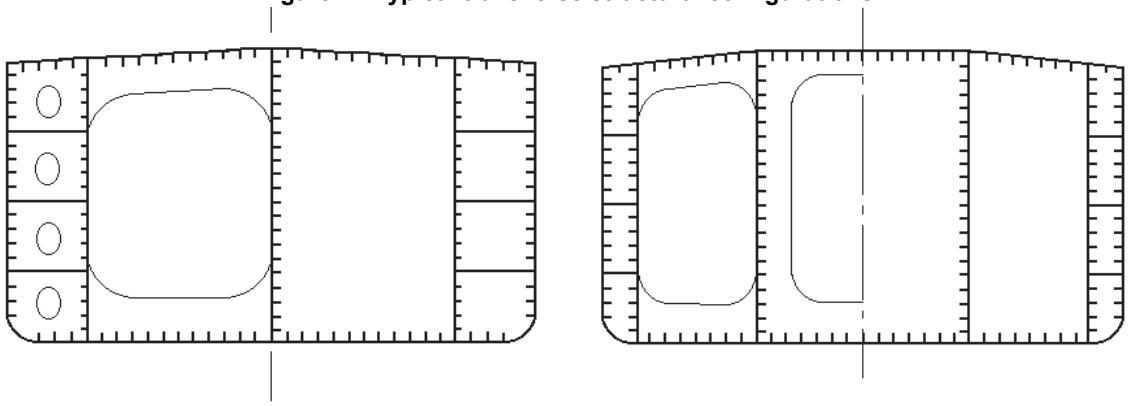

Typical arrangement with longitudinal bulkhead in centre line

Typical arrangement with two longitudinal bulkheads

3.2.2 Structural continuity

The variation in scantling between the midship region and the fore and aft parts is to be gradual.

Attention is to be paid to the structural continuity:

- in way of changes in the framing system
- at the connections of primary or ordinary stiffeners
- in way of the ends of the cargo area
- in way of ends of superstructures.

Longitudinal members contributing to the hull girder longitudinal strength are to extend continuously for a sufficient distance towards the ends of the unit.

Ordinary stiffeners contributing to the hull girder longitudinal strength are generally to be continuous when crossing primary supporting members. Otherwise, the detail of connections is considered by the Society on a case-by-case basis.

Longitudinals of the bottom, bilge, sheerstrake, deck, upper and lower longitudinal bulkhead and inner side strakes, as well as the latter strakes themselves, the lower strake of the centreline bottom girder and the upper strake of the centreline deck girder, where fitted, are to be continuous through the transverse bulkheads of the cargo area and cofferdams. Alternative solutions may be examined by the Society on a case-by-case basis, provided they are equally effective.

Where stress concentrations may occur in way of structural discontinuities, adequate compensation and reinforcements are to be provided.

Openings are to be avoided, as far as practicable, in way of highly stressed areas.

Where necessary, the shape of openings is to be specially designed to reduce the stress concentration factors. Particular attention is to be paid to the passage of secondary stiffeners through web plating in the stress vicinity of heavy loads, i.e. top side loads on deck supports.

Openings are to be generally well rounded with smooth edges.

Primary supporting members are to be arranged in such a way that they ensure adequate continuity of strength. Abrupt changes in height or in cross-section are to be avoided.

3.2.3 Connections with higher strength steel

The vertical extent of higher strength steel is to comply with the requirements of Ch 1, Sec 6, [3.3.5].

When a higher strength steel is adopted at deck, members not contributing to the longitudinal strength and welded on the strength deck (e.g. hatch coamings, strengthening of deck openings) are also generally to be made of the same higher strength steel.

3.2.4 Docking brackets

The Society recommends fitting of docking brackets considering the future topside weight.

3.2.5 Bilge keel

If a bilge keel is fitted, requirements are given in [10.6].

3.2.6 Sniped ends

As a rule, sniped ends of primary and secondary stiffeners are to be less than 30 degrees as indicated on Fig 12.

4 Structural principles for plating

4.1 General

4.1.1 A local increase in plating thickness is generally to be achieved through insert plates.

Insert plates are to be made of materials of a quality at least equal to that of the plates on which they are welded.

Plating under heavy concentrated loads shall be reinforced with doublers (only compression loads allowed) and/or stiffeners where necessary. Doublers in way of equipment and pipe rack supports are to be limited in size and avoided in areas of the deck with high stress. A detailed drawing showing location of the doublers is to be submitted to the Society for review.

5 Structural principles for ordinary stiffeners

5.1 General

5.1.1 Stiffener not perpendicular to the attached plating

Where the stiffener is not perpendicular to the attached plating, the actual net section modulus w, in cm³, and net shear area A_{sh}, in cm², and net moment of inertia I, in cm⁴, may be obtained, from the following formulae:

$w = w_0 \sin \varphi_w$

$A_{sh} = A_0 \sin \varphi_w$

$I = I_0 \sin^2 \varphi_w$

where:

A_0 : Actual net shear area, in cm², of the stiffener assumed to be perpendicular to the plating

I_0 : Net moment of inertia, in cm⁴, of the stiffener assumed to be perpendicular to the attached plating

w_0 : Actual net section modulus, in cm³, of the stiffener assumed to be perpendicular to the plating

φ_w : Angle, in degree, between the attached plating and the web of the stiffener, measured at midspan of the stiffener (see Fig 5).

5.1.2 Bulb section: equivalent angle profile

A bulb section may be taken as equivalent to an angle profile.

The dimensions of the equivalent angle profile are to be obtained, in mm, from the following formulae:

$$h_w = h'_w - \frac{h'_w}{9,2} + 2$$

$$t_w = t'_w$$

$$b_f = \varphi\left[t'_w + \frac{h'_w}{6,7} - 2\right]$$

$$t_f = \frac{h'_w}{9,2} - 2$$

where:

h'_w, t'_w : Height and net thickness of the bulb section, in mm, as shown in Fig 2.

φ : Coefficient equal to:

$$\varphi = 1,1 + \frac{(120 - h'_w)^2}{3000} \quad \text{for} \quad h'_w \le 120$$

$$\varphi = 1 \quad \text{for} \quad h'_w > 120$$

Figure 2 : Dimensions of a bulb section

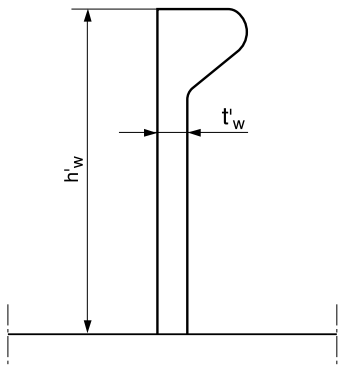

5.2 Span of ordinary stiffeners

5.2.1 General

The span ℓ of ordinary stiffeners is to be measured as shown in Fig 3.

5.2.2 Ordinary stiffeners connected by struts

The span of ordinary stiffeners connected by one or two struts, dividing the span in equal lengths, may be taken equal to $0,7\ell$.

Figure 3 : Span ℓ of ordinary stiffeners

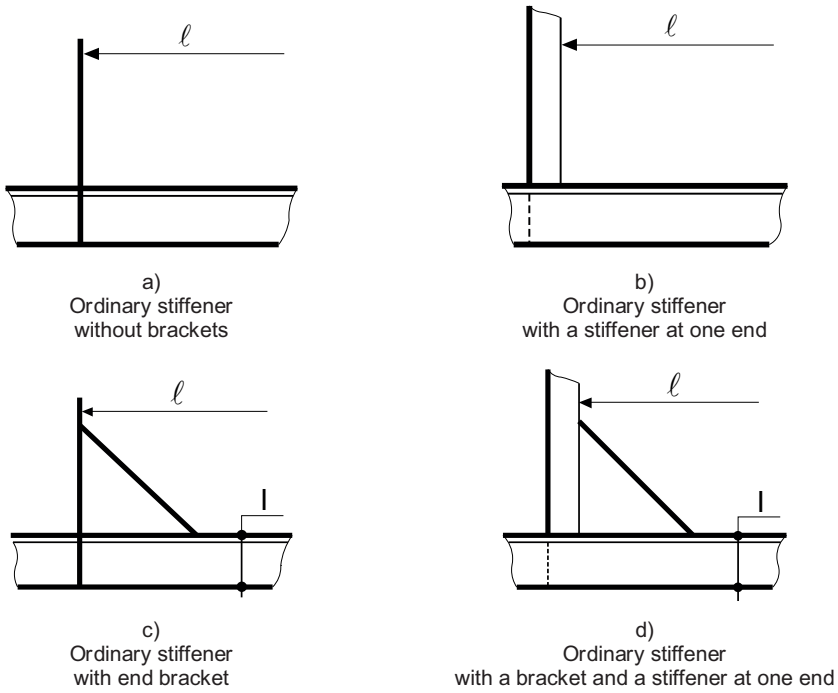

5.3 Width of attached plating

5.3.1 Yielding check

The width of the attached plating to be considered for the yielding check of ordinary stiffeners is to be obtained, in m, from the following formulae:

- where the plating extends on both sides of the ordinary stiffener:

  $b_p = s$

- where the plating extends on one side of the ordinary stiffener (i.e. ordinary stiffeners bounding openings):

  $b_p = 0,5s$

5.3.2 Buckling check and ultimate strength check

The attached plating to be considered for the buckling and ultimate strength check of ordinary stiffeners is defined in Ch 1, Sec 8.

5.4 Geometric properties

5.4.1 Built section

The geometric properties of built sections as shown in Fig 4 may be calculated as indicated in the following formulae.

These formulae are applicable provided that:

$A_a \geq t_f b_f$

$\frac{h_w}{t_p} \geq 10$

$\frac{h_w}{t_f} \geq 10$

where:

A_a : Net sectional area, in mm², of the attached plating.

Figure 4 : Dimensions of a built section

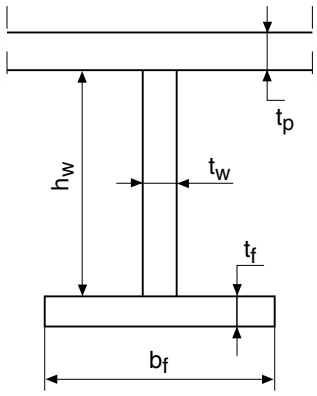

The net section modulus of a built section with attached plating is to be obtained, in cm³, from the following formula:

$$w = \frac{h_w t_f b_f}{1000} + \frac{t_W h_W^2}{6000}\left(1 + \frac{A_a - t_f b_f}{A_a + \frac{t_W h_W}{2}}\right)$$

The distance from face plate to neutral axis is to be obtained, in cm, from the following formula:

$$v = \frac{h_W(A_a + 0,5 t_W h_W)}{10(A_a + t_f b_f + t_W h_W)}$$

The net moment of inertia of a built section with attached plating is to be obtained, in cm⁴, from the following formula:

$I = w \cdot v$

The net shear sectional area of a built section with attached plating is to be obtained, in cm², from the following formula:

$$A_{sh} = \frac{h_w t_w}{100}$$

5.4.2 Plastic section modulus

The actual net effective plastic section modulus Z_{pl} of a transverse or longitudinal ordinary stiffener, in cm³, is given by the formula in item a) or item b), depending on:

- the cross-sectional area of the attached plate A_p
- the net cross-sectional area of the ordinary stiffener $A_w' + A_f$

where:

A_p : Net cross-sectional area of the attached plate, in cm², taken equal to:

$A_p = 10\, t_p\, s$

A_f : Net cross-sectional area of the stiffener flange, in cm², taken equal to:

$$A_f = \frac{b_f\, t_f}{100}$$

A_w' : Net cross-sectional area of the stiffener web, in cm², taken equal to:

$$A_w' = \frac{h_w\, t_w}{100}$$

a) When $A_p \geq A_w' + A_f$, the plastic neutral axis PNA is assumed to be tangent to the uppermost edge of the attached plate:

$$Z_{pl} = \frac{A_p' x_p + A_w' x_w + A_f x_f}{10}$$

where:

A_p' : Net cross-sectional area of the stiffener, in cm², taken equal to:

$A_p' = A_w' + A_f$

x_p : Distance, in mm, between the centre of gravity of area A_p and PNA, taken equal to:

$$x_p = \text{Min}\left(\frac{A_w' + A_f}{20\, s}\, ;\, \frac{t_p}{2}\right)$$

x_f : Distance, in mm, between the centre of gravity of area A_f and PNA, taken equal to:

$x_f = h_{fc} \sin \varphi_w - b_w \cos \varphi_w$

h_{fc} : Height, in mm, of the stiffener, measured up to the centre of the flange area, see Fig 5

b_w : Distance, in mm, from the mid-thickness plane of the stiffener web to the centre of the flange area, see Fig 5

x_w : Distance, in mm, between the centre of gravity of area A_w' and PNA, taken equal to:

$$x_w = \frac{h_w \sin\varphi_w}{2}$$

φ_w : As defined in [5.1.1]

b) When $A_p < A_w' + A_f$ the plastic neutral axis PNA is located at a distance z_a above the attached plate, in mm, given by:

$$z_a = \frac{(100\,A_f + h_w\,t_w - 1000\,t_p\,s)\ \sin\varphi_w}{2\,t_w}$$

$$Z_{pl} = \frac{(A_p\,x_p + A_{wa}\,x_{wa} + A_{wb}\,x_{wb} + A_f\,x_f)}{10}$$

where:

A_{wa} : Net cross-sectional area, in cm², of the part of the stiffener located above PNA, taken equal to:

$$A_{wa} = \left(h_w - \frac{z_a}{\sin\varphi_w}\right)\frac{t_w}{100}$$

A_{wb} : Net cross-sectional area, in cm², of the part of ordinary stiffener located below the PNA, taken equal to:

$$A_{wb} = \frac{t_w\ z_a}{100\ \sin\varphi_w}$$

x_f : Distance, in mm, between the centre of gravity of area A_f and PNA, taken equal to:

$$x_f = h_{fc}\sin\varphi_w - b_w\cos\varphi_w - z_a$$

x_p : Distance, in mm, between the centre of gravity of area A_p and PNA, taken equal to:

$$x_p = z_a + \frac{t_p}{2}$$

x_{wa} : Distance, in mm, between the centre of gravity of area A_{wa} and PNA, taken equal to:

$$x_{wa} = \left(h_w - \frac{z_a}{\sin\varphi_w}\right)\frac{\sin\varphi_w}{2}$$

x_{wb} : Distance, in mm, between the centre of gravity of area A_{wb} and PNA, taken equal to:

$$x_{wb} = \frac{z_a}{2}$$

φ_w : As defined in [5.1.1].

Figure 5 : Dimensions of a built section

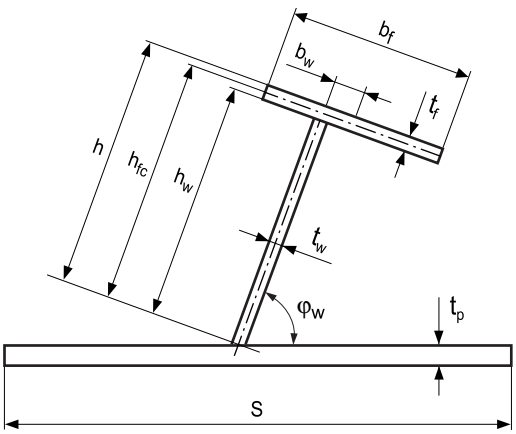

5.5 End connections

5.5.1 Where ordinary stiffeners are continuous through primary supporting members, they are to be connected to the web plating so as to ensure proper transmission of loads, e.g. by means of one of the connection details shown in Fig 6 to Fig 9.

Connection details other than those shown in Fig 6 to Fig 9 may be considered by the Society on a case by case basis. In some cases, the Society may require the details to be supported by direct calculations submitted for review.

Figure 6 : End connection of ordinary stiffener - Without collar plate

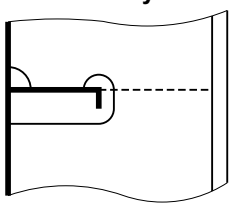

Figure 7 : End connection of ordinary stiffener - collar plate

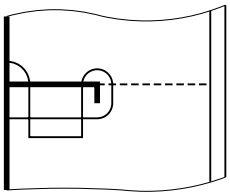

Figure 8 : End connection of ordinary stiffener - One large collar plate

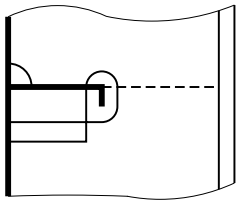

Figure 9 : End connection of ordinary stiffener - Two large collar plates

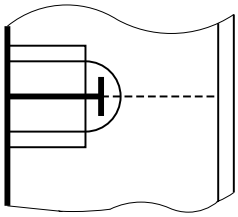

5.5.2 Where ordinary stiffeners are cut at primary supporting members, brackets are to be fitted to ensure the structural continuity. Their net section modulus and their net sectional area are to be not less than those of the ordinary stiffeners.

The net thickness of brackets is to be not less than that of ordinary stiffeners. Brackets with net thickness, in mm, less than $15L_b$, where L_b is the length, in m, of the free edge of the end bracket, are to be flanged or stiffened by a welded face plate. The net sectional area, in cm^2, of the flanged edge or face plate is to be at least equal to 10 L_b .

5.5.3 Where necessary, the Society may require backing brackets to be fitted, as shown in Fig 10, in order to improve the fatigue strength of the connection (see also [6.3.4]).

Figure 10 : End connection of ordinary stiffener - Backing bracket

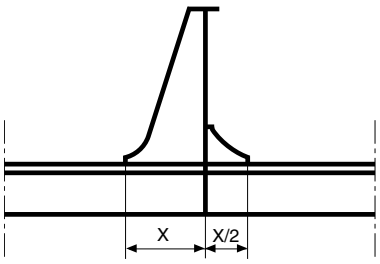

6 Structural principles for primary supporting members

6.1 General

6.1.1 In the cargo area, the primary structure is composed of transverse web frames, stringers, buttress, deck girders, cross-ties, etc.

6.2 Bracketed end connections

6.2.1 The primary supporting members are generally connected through brackets. These brackets are to comply with the requirements [6.2.2] to [6.2.8].

6.2.2 Arm lengths of end brackets are to be equal, as far as practicable, and are to comply with the following requirements:

a) For transversally frame single sides, the height of end brackets is to be not less than half the height of the primary supporting member.

b) For other structures, the arm length of brackets connecting primary supporting members, as shown in Fig 11, is not to be less than the web depth of the member and need not be taken greater than 1,5 times the web depth.

c) End brackets are generally to be soft-toed.

Figure 11 : Bracket dimensions

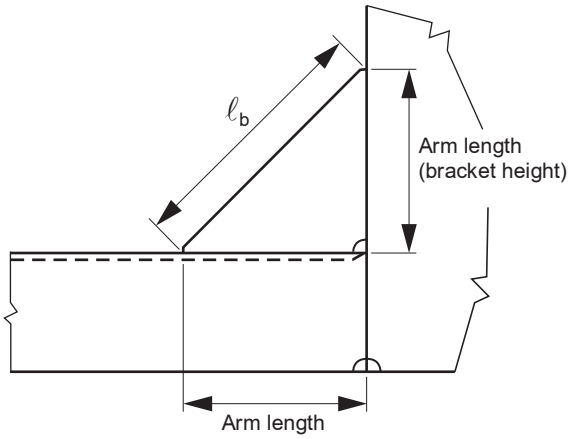

6.2.3 The net thickness of the end bracket web is generally to be not less than that than the thickness of the adjoining primary supporting member web plate.

6.2.4 The net scantlings of end brackets are generally to be such that the net section modulus of the primary supporting member with end brackets, excluding face plate where it is sniped, is not less than that of the primary supporting member at mid-span.

6.2.5 The net cross-sectional area A_f, in cm², of bracket face plates is to be such that:

$A_f \geq \ell_b \, t_b$

where:

ℓ_b : Length of the bracket edge, in m (see Fig 10). For curved brackets, the length of the bracket edge may be taken as the length of the tangent at the midpoint of the edge

t_b : Minimum net bracket web thickness, in mm:

$$t_b \geq (2 + 0,2\sqrt{w})\sqrt{\frac{R_{eH,S}}{R_{eH,B}}}$$

with:

w : Net required section modulus of the primary supporting member, in cm³

$R_{eH,S}$: Minimum yield stress, in N/mm², of the stiffener material

$R_{eH,B}$: Minimum yield stress, in N/mm², of the bracket material.

Moreover, the net thickness of the face plate is to be not less than that of the bracket web.

6.2.6 Where deemed necessary, face plates of end connecting brackets are to be symmetrical. In such a case, the following requirements are in general to be complied with:

- face plates are to be tapered at ends with a total angle not greater than 30°
- the breadth of face plates at ends is not to be greater than 25 mm
- face plates of 20 mm thick and above are to be tapered in thickness at their ends down to their mid-thickness
- bracket toes are to be of increased thickness
- an additional tripping bracket is to be fitted
- the radius R of the face plate is to be as large as possible
- collar plates welded to the plating are to be fitted in way of the bracket toes
- throat thickness of fillet welds is not to be less than t/2, where t is the thickness of the bracket toe.

In general, full penetration welds should be applied as shown on the example of bracket with symmetrical face plate indicated in Fig 12 and Fig 13.

Figure 12 : Bracket with symmetrical face plate

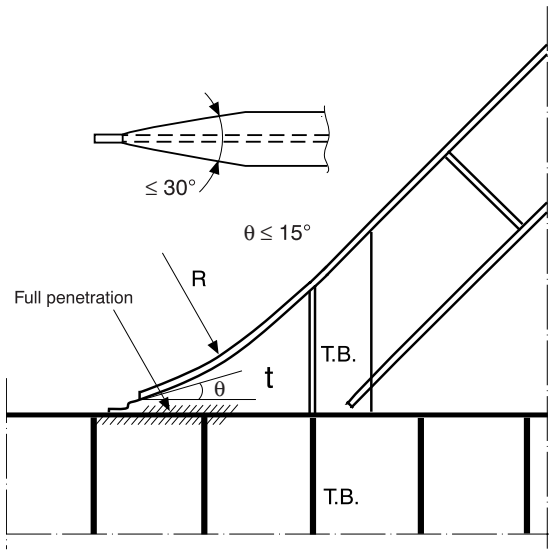

Figure 13 : Bracket with symmetrical face plate

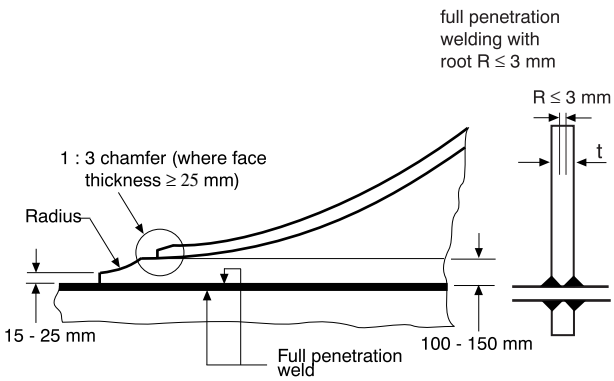

6.2.7 Stiffening of end brackets is to be designed such that it provides adequate buckling web stability.

As guidance, the following prescriptions may be applied:

- where the length L_b is greater than 1,5 m, the web of the bracket is to be stiffened
- the net sectional area, in cm², of web stiffeners is to be not less than 16,5 ℓ, where ℓ is the span, in m, of the stiffener
- tripping flat bars are to be fitted to prevent lateral buckling of web stiffeners. Where the width of the symmetrical face plate is greater than 400 mm, additional backing brackets are to be fitted.

For a ring system, where the end bracket is integral with the web of the members and the face plate is welded continuously onto the edge of the members and the bracket, the full area of the larger face plate is to be maintained close to the mid-point of the bracket and gradually tapered to the smaller face plate. Butts in face plates are to be kept well clear of the bracket toes.

Where a wide face plate abuts a narrower one, the taper is not to be greater than 1 to 4.

The bracket toes are not to land on unstiffened plating. The toe height is not to be greater than the thickness of the bracket toe, but need not be less than 15 mm. In general, the end brackets of primary supporting members are to be soft-toed. Where primary supporting members are constructed of steel having a strength higher than the strength of the bracket steel, particular attention is to be paid to the design of the end bracket toes in order to minimise stress concentrations.

Where a face plate is welded onto, or adjacent to, the edge of the end bracket (see Fig 14 the face plate is to be sniped and tapered at an angle not greater than 30°.

6.2.8 In addition to the above requirements, the end brackets are to comply with the applicable requirements given in Articles [10], [11] [12].

Figure 14 : Bracket face plate adjacent to the edge

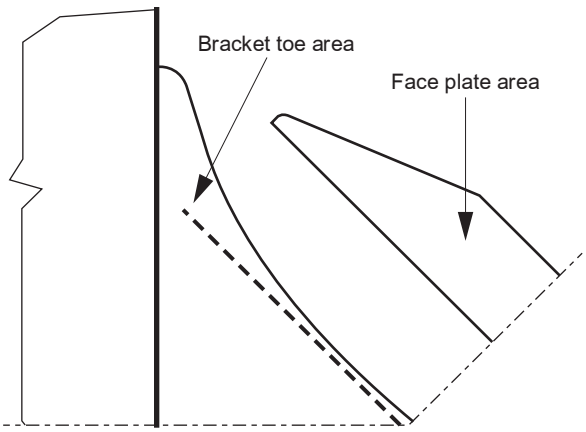

Note: The details shown in this Figure are only used to illustrate items described in the text and are not intended to represent a design guidance or recommendations.

6.3 Stiffening arrangement

6.3.1 Webs

Webs of primary supporting members are generally to be stiffened where the height, in mm, is greater than 100 t, where t is the web net thickness, in mm, of the primary supporting member.

In general, the web stiffeners of primary supporting members are to be spaced not more than 110 t.

6.3.2 Net sectional area

Where primary supporting member web stiffeners are welded to ordinary stiffener face plates, their net sectional area at the web stiffener mid-height is to be not less than the value obtained, in cm², from the following formula:

$$A = 0{,}1\ k_1\ (\gamma_{S2}\ p_S + \gamma_{W2}\ p_W)\ s\ \ell$$

where:

k_1 : Coefficient depending on the web connection with the ordinary stiffener, to be taken as:

- $k_1 = 0{,}30$ for connections without collar plate (see Fig 6)
- $k_1 = 0{,}225$ for connections with a collar plate (see Fig 7)
- $k_1 = 0{,}20$ for connections with one or two large collar plates (see Fig 8 and Fig 9)

γ_{S2}, γ_{W2} : Partial safety factors, defined in Ch 1, Sec 9 for yielding check (general)

p_S, p_W : Still water and wave pressure, respectively, in kN/m², acting on the ordinary stiffener, defined in Ch 1, Sec 5.

6.3.3 Net moment of inertia

The net moment of inertia, I, of the web stiffeners of primary supporting members is not to be less than the value obtained, in cm⁴, from the following formula:

- for web stiffeners parallel to the flange of the primary supporting members (see Fig 15):

$$I = C\ell^2 A\frac{R_{eH}}{235}$$

- for web stiffeners normal to the flange of the primary supporting members (see Fig 16):

$$I = 11{,}4\ st_w(2{,}5\ \ell^2 - 2s^2)\frac{R_{eH}}{235}$$

where:

C : Slenderness coefficient to be taken as:

- C = 1,43 for longitudinal web stiffeners including sniped stiffeners
- C = 0,72 for other web stiffeners

A : Net section area, in cm², of the web stiffener, including attached plate assuming effective breadth of 80% of stiffener spacing s

R_{eH} : Minimum specified yield stress of the material of the web plate of primary supporting member.

Figure 15 : Web stiffeners parallel to the flange

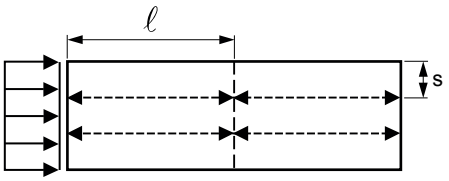

Figure 16 : Web stiffeners normal to the flange

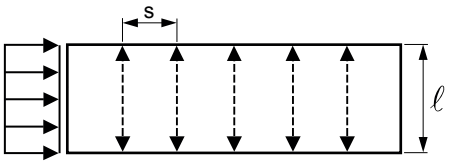

6.3.4 Tripping brackets

Tripping brackets (see Fig 16) welded to the face plate are generally to be fitted:

- every fourth spacing of ordinary stiffeners, without exceeding 4 m
- at the toe of end brackets
- at rounded face plates
- in way of cross ties
- in way of concentrated loads.

Where the width of the symmetrical face plate is greater than 400 mm, backing brackets are to be fitted in way of the tripping brackets.

In general, the width of the primary supporting member face plate is to be not less than one tenth of the depth of the web, where tripping brackets are spaced as specified above.

The arm length of tripping brackets is to be not less than the greater of the following values, in m:

$$d = 0{,}38b$$

$$d = 0{,}85b\sqrt{\frac{s_t}{t}}$$

where:

b : Height, in m, of tripping brackets, shown in Fig 17

s_t : Spacing, in m, of tripping brackets

t : Net thickness, in mm, of tripping brackets.

It is recommended that the bracket toe should be designed as shown in Fig 17.

Tripping brackets with a net thickness, in mm, less than 15 L_b are to be flanged or stiffened by a welded face plate.

The net sectional area, in cm^2, of the flanged edge or the face plate is to be not less than $10L_b$, where L_b is the length, in m, of the free edge of the bracket.

Where the depth of tripping brackets is greater than 3 m, an additional stiffener is to be fitted parallel to the bracket free edge.

Figure 17 : Tripping bracket

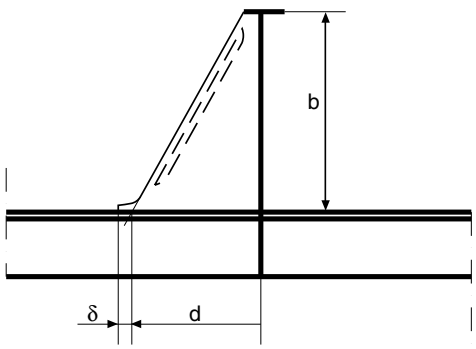

6.4 Strength checks of cross-ties analysed through a three dimensional finite element model

6.4.1 The buckling capacity of cross-ties is to be carried out according to NR615, Buckling Assessment of Plated Structures. Buckling criteria is to be in accordance with Ch 1, Sec 9, [7.2].

6.5 Buttress

6.5.1 The buttress of transverse bulkhead is to be assessed through direct calculation, including fatigue.

The buttress is to be adequately stiffened, including tripping brackets according to [6.2]

The bracket ends are to be in accordance with [6.2].

In general, full penetration welds are to be applied as shown on the example of buttress arrangement (see Fig 18).

Figure 18 : Buttress

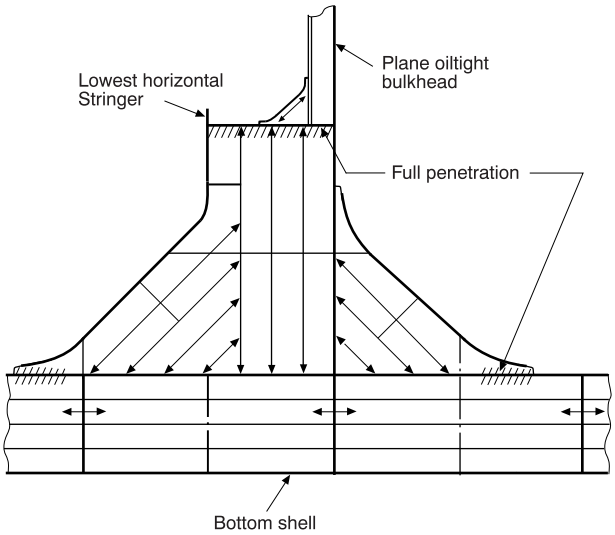

6.6 Stringers

6.6.1 Stringers on bulkheads are to be verified as swash bulkheads for sloshing. In case of risk of resonance, horizontal stringers are to be verified for the associated impact pressure on the adjacent bulkhead plating and stiffeners. Tripping brackets supporting the stringers are to be checked for loads as result of sloshing.

7 Net scantling approach

7.1 Principle

7.1.1 Except when otherwise specified, the scantlings obtained by applying the criteria specified in this Chapter are net scantlings, i.e. those which provide the strength characteristics required to sustain the loads, excluding any addition for corrosion. Exceptions are the scantlings:

- obtained from the yielding checks of the hull girder in Ch 1, Sec 6
- of rudder structures and hull appendages in Part B, Chapter 12 of Ship Rules
- of massive pieces made of steel forgings, steel castings or iron castings,

which are gross scantlings, i.e. they include additions for corrosion.

7.1.2 The required strength characteristics are:

- thickness, for plating including that which constitutes primary supporting members
- section modulus, shear area, moments of inertia and local thickness, for ordinary stiffeners and, as the case may be, primary supporting members
- section modulus, moments of inertia and first moment for the hull girder.

7.1.3 The unit is to be built at least with the gross scantlings obtained by adding the corrosion additions, specified in Tab 2, to the net scantlings.

7.1.4 General

The net scantling plus the corrosion addition is equal to the gross thickness.

The values of the corrosion additions specified in this Article are to be applied in relation to the relevant protective coatings required by the Rules.

If the party applying for classification specifies values of corrosion additions greater than those defined in [7.2], these values are to be taken into account for calculations and stated in the Design Criteria Statement.

7.2 Corrosion additions

7.2.1 Corrosion additions for steel other than stainless steel

In general, the corrosion addition to be considered for plating forming the boundary between two compartments of different types is equal to:

- for plating with a gross thickness greater than 10 mm, the sum of the values specified in Tab 2 for one side exposure to each compartment
- for plating with a gross thickness less than or equal to 10 mm, the smallest of the following values:
  - 20% of the gross thickness of the plating
  - sum of the values specified in Tab 2 for one side exposure to each compartment.

For an internal member within a given compartment, or for plating forming the boundary between two compartments of the same type, the corrosion addition to be considered is twice the value specified in Tab 2 for one side exposure to that compartment.

When, according to Tab 2, a structural element is affected by more than one value of corrosion additions (e.g. a side frame in a dry bulk cargo hold extending above the lower zone), the scantling criteria are generally to be applied considering the value of corrosion addition applicable at the lowest point of the element.

7.2.2 Corrosion additions for stainless steel

For structural members made of stainless steel, the corrosion addition t_c is to be taken equal to 0.

7.2.3 Corrosion additions for non-alloyed steel clad with stainless steel

For plates made of non-alloyed steel clad with stainless steel, the corrosion addition t_c is to be taken equal to 0 only for the plate side clad with stainless steel.

7.2.4 Corrosion additions for aluminium alloys

For structural members made of aluminium alloys, the corrosion addition t_c is to be taken equal to 0.

Table 2 : Corrosion additions t_c, in mm, for each exposed side

Compartment type		General **(1)**	Special cases
Ballast tank **(2)**		1,00	1,25 in upper zone **(3)**
Cargo oil tank and fuel oil tank	Plating of horizontal surfaces	0,75	1,00 in upper zone **(3)**
	Plating of non-horizontal surfaces	0,50	1,00 in upper zone **(3)**
	Ordinary stiffeners and primary supporting members	0,75	1,00 in upper zone **(3)**
Tanks for fresh water		0,5	
Accommodation space **(4)**		0,00	
Compartments other than those mentioned above **(4)** Outside sea and air		0,50	

(1) General: corrosion additions t_c are applicable to all members of the considered item with possible exceptions given for upper and lower zones
(2) Ballast tank: does not include cargo oil tanks which may carry ballast according to Regulation 18 of MARPOL 73/78 as amended
(3) Upper zone: area within 1,5 m below the top of the tank. This is to be applied only to tanks with weather deck as the tank top
(4) When not covered by any sheeting, AC Room, galleys, technical areas and crew staircases are to be considered as “other compartments”.

8 Thickness increments

8.1 General

8.1.1 Principle

A thickness increment of platings and, where relevant, of stiffeners may be added to the gross thickness in special areas subject to mechanical wastage due to abrasion or in areas of difficult maintenance.

$t_{net} = t_{gross} - t_c$

$t_{gross} = t_{as\text{-}built} - t_i$

where:

t_c : Corrosion addition as defined in Article [8]

t_{gross} : Gross thickness

t_i : Thickness increment

t_{net} : Net thickness.

The gross thickness plus the thickness increment is equal to the as-built thickness.

8.1.2 Checking criteria

For the checking criteria specified in this Chapter and in applicable requirements of the Ship Rules the thickness increments are not to be considered.

8.2 Thickness increment values

8.2.1 Units without the additional class notation STI

When the additional class notation **STI** is not assigned to the unit, the thickness increments are to be taken equal to zero.

8.2.2 Units with the additional class notation STI

When the unit is assigned the additional class notation **STI**, the thickness increments may be defined by the Owner or by the Society, as follows:

a) When the Owner specifies its own thickness increments, it is to be notified to the Society where thickness increments are provided. Thickness increments are to be stated in the Design Criteria Statement.

b) When the Owner does not provide its own thickness increments, the values to be considered are defined in Tab 3.

Adequate indications (location, value of thickness increments) are to be given in the relevant structural drawings.

Table 3 : Thickness increments

Structural element	Thickness increment, in mm
Strength deck	1
Bottom	1
Side shell above the maximum draught at site	1
Side shell below the minimum draught at site	1
Splash zone	5
Inner skin	1
Upper strake of longitudinal bulkhead	1
Lowest side stringer	1

9 Bulkhead structure

9.1 General

9.1.1 The requirements of the present Article [9] apply to longitudinal or transverse bulkhead structures.

Generally, plane bulkheads are to be applied. Longitudinal bulkheads are usually longitudinally stiffened and transverse bulkheads mainly vertically stiffened with horizontal stringers (primary structure).

The lower stringer on transverse bulkheads may be supported by buttress (see Fig 18).

9.1.2 General arrangement

The number and location of watertight bulkheads are to be in accordance with the relevant requirements given in Ch 1, Sec 2.

Longitudinal bulkheads are to terminate at transverse bulkheads and are to be effectively tapered to the adjoining structure at the ends and adequately extended in the machinery space, where applicable.

Where the longitudinal watertight bulkheads contribute to longitudinal strength, the plating thickness is to be uniform for a distance of at least 0,1D from the deck and bottom.

The structural continuity of the bulkhead vertical and horizontal primary supporting members with the surrounding supporting structures is to be carefully ensured.

The web height of vertical primary supporting members of longitudinal bulkheads may be gradually tapered from bottom to deck. The maximum acceptable taper, however, is 80 mm per metre.

9.1.3 Watertight bulkheads of trunks, tunnels

Watertight trunks, tunnels, duct keels and ventilators are to be of the same strength as watertight bulkheads at corresponding levels. The means used for making them watertight, and the arrangements adopted for closing openings in them, are to be to the satisfaction of the Society.

9.1.4 Openings in watertight bulkheads

a) Openings may not be cut in the collision bulkhead below the freeboard deck.

The number of openings in the collision bulkhead above the freeboard deck is to be kept to the minimum compatible with the design and proper working of the unit.

All such openings are to be fitted with means of closing to weathertight standards.

b) Certain openings below the freeboard deck are permitted in the other bulkheads, but these are to be kept to a minimum compatible with the design and proper working of the unit and to be provided with watertight doors having strength such as to withstand the head of water to which they may be subjected.

9.1.5 Watertight doors

Where vertical stiffeners are cut in way of watertight doors, reinforced stiffeners are to be fitted on each side of the door and suitably overlapped; cross-bars are to be provided to support the interrupted stiffeners.

9.2 Plane bulkheads

9.2.1 The requirements for plane bulkheads are given in Pt B, Ch 4, Sec 5, [10.2] of the Ship Rules.

Horizontal stringers and associated brackets are subject to fatigue loading and are to be accessible for inspection. The structural analysis of these stringers must take into account any openings for ladders and pipes.

Attention is also to be paid to possible sloshing loads.

9.2.2 The upper part of plane bulkheads (longitudinal and transversal) are to be adequately reinforced in way of topside supports.

9.2.3 Vertical secondary stiffeners

For floating units with single bottom special attention is to be paid to the connection of vertical stiffeners on transverse bulkheads and bottom longitudinals. Direct calculation is to be submitted for information.

Attention is also to be paid to possible sloshing loads.

9.3 Swash bulkheads

9.3.1 General

The present [9.3] applies to transverse and longitudinal swash bulkheads whose main purpose is to reduce the liquid motions in partly filled tanks.

9.3.2 Openings

The total area of openings in a transverse swash bulkhead is generally to be between 10% and 30% of the total bulkhead area.

In the upper, central and lower portions of the bulkhead (the depth of each portion being 1/3 of the bulkhead height), the areas of openings, expressed as percentages of the corresponding areas of these portions, are to be within the limits given in Tab 4.

In general, openings may not be cut within 0,15D from bottom and from deck.

Table 4 : Areas of openings in transverse swash bulkheads

Bulkhead portion	Lower limit	Upper limit
Upper	10%	15%
Central	10%	50%
Lower	2%	10%

9.4 Racking bulkheads

9.4.1 The Society may request racking bulkheads in the cargo area, if necessary.

The racking bulkheads are to be verified for design pressure indicated for the scantling of swash bulkheads.

The racking bulkheads are to be checked through direct calculations. Particular attention is to be paid to shear stress.

A racking bulkhead not complying with Tab 4 can not be considered as a swash bulkhead. In this case, the racking bulkhead is not to be taken into account in the sloshing calculation.

10 Bottom structure

10.1 General

10.1.1 Application

The requirements of this Article apply to longitudinally or transversely framed single and double bottom structures.

10.1.2 General arrangement

a) In units greater than 120 m in length, the bottom is, in general, to be longitudinally framed.

b) The bottom structure is to be checked by the Designer to make sure that it withstands the loads resulting from the dry-docking of the unit.

c) The bottom is to be locally stiffened where concentrated loads are envisaged.

d) Girders or floors are to be fitted under each line of pillars, when deemed necessary by the Society on the basis of the loads carried by the pillars.

e) Adequate tapering is to be provided between double bottom and adjacent single bottom structures. Similarly, adequate continuity is to be provided in the case of height variation in the double bottom. Where such a height variation occurs within 0,6 L amidships, the inner bottom is generally to be maintained continuous by means of inclined plating.

f) Provision is to be made for the free passage of water from all parts of the bottom to the suctions, taking into account the pumping rate required.

g) When solid ballast is fitted, it is to be securely positioned. If necessary, intermediate floors may be required for this purpose.

10.1.3 Keel

The width of the keel b is to be not less than the value obtained, in m, from the following formula:

$$b = 0,8 + 0,5\frac{L}{100}$$

10.1.4 Drainage and openings for air passage

a) Holes are to be cut into floors and girders to ensure the free passage of air and liquids from all parts of the double bottom.

b) Air holes are to be cut as near to the inner bottom and draining holes as near to the bottom shell as practicable.

10.2 Transversely framed single bottom

10.2.1 General

a) Single bottom units are to be fitted with a centre girder formed by a vertical continuous or intercostal web plate and a horizontal face plate continuous over the floors. Intercostal web plates are to be aligned and welded to floors.

b) In general, girders are to be fitted spaced not more than 2,5 m apart and formed by a vertical intercostal web plate and a horizontal face plate continuous over the floors. Intercostal web plates are to be aligned and welded to floors.

c) Centre and side girders are to be extended as far aft and forward as practicable.

d) Where side girders are fitted in lieu of the centre girder, the scarfing is to be adequately extended and additional stiffening of the centre bottom may be required.

e) Longitudinal girders are to be fitted in way of each line of pillars.

f) Floors are to be made with a welded face plate between the collision bulkhead and 0,25L from the fore end.

10.2.2 Floors

In general, the floor spacing is to be not greater than 5 frame spacings.

10.2.3 Longitudinal ordinary stiffeners

Longitudinal ordinary stiffeners are generally to be continuous when crossing primary members.

10.3 Transversely framed single bottom

10.3.1 General

The requirements in [10.2.1] apply also to transversely framed single bottoms.

10.3.2 Floors

a) Floors are to be fitted at every frame.

b) The height, in m, of floors at the centreline is to be not less than $\ell/16$. In the case of units with considerable rise of floor, this height may be required to be increased so as to assure a satisfactory connection to the frames.

10.4 Longitudinally framed double bottom

10.4.1 General

The centre girder is to be continuous and extended over the full length of the unit and the spacing of adjacent longitudinal girders is generally to be not greater than 6,5 m.

10.4.2 Double bottom height

The double bottom height is given in Pt B, Ch 2, Sec 2, [3] of the Ship Rules or Pt D, Ch 7, Sec 2, [3] of the Ship Rules as applicable.

10.4.3 Floors

a) The spacing of plate floors, in m, is generally to be not greater than 0,05L or 3,8 m, whichever is the lesser. Additional plate floors are to be fitted in way of transverse watertight bulkheads.

b) Plate floors are generally to be provided with stiffeners in way of longitudinal ordinary stiffeners.

c) Where the double bottom height exceeds 0,9 m, watertight floors are to be fitted with stiffeners having a net section modulus not less than that required for tank bulkhead vertical stiffeners.

10.4.4 Bottom and inner bottom longitudinal ordinary stiffeners

Bottom and inner bottom longitudinal ordinary stiffeners are generally to be continuous through the floors.

10.4.5 Brackets to centreline girder and margin plate

a) In general, intermediate brackets are to be fitted connecting either the margin plate or the centre girder to the nearest bottom and inner bottom ordinary stiffeners.

b) Such brackets are to be stiffened at the edge with a flange having a width not less than 1/10 of the local double bottom height.

If necessary, the Society may require a welded flat bar to be arranged in lieu of the flange.

c) Where the side shell is transversely stiffened, margin plate brackets are to be fitted at every frame.

10.4.6 Duct keel

a) Where a duct keel is arranged, the centre girder may be replaced by two girders conveniently spaced, generally no more than 2 m apart.

b) The structures in way of the floors are to ensure sufficient continuity of the latter.

10.4.7 Bilge wells

a) Bilge wells arranged in the double bottom are to be formed by steel plates having a net thickness not less than the greater of that required for watertight floors and that required for the inner bottom.

b) Vertical extension of bilge wells is to comply with the requirements given in

- Pt B, Ch 2, Sec 2, [3.1.3] of the Ship Rules or
- Pt D, Ch 7, Sec 2, [3.2.3] of the Ship Rules as applicable.

c) Where there is no margin plate, well arrangement is considered by the Society on a case by case basis.

10.5 Transversely framed double bottom

10.5.1 General

The requirements in [10.4.1], [10.4.2], [10.4.5], [10.4.6] and [10.4.7] apply also to transversely framed double bottoms.

10.5.2 Floors

a) Plate floors are to be fitted at every frame forward of 0,75L from the aft end.

Plate floors are also to be fitted:

- in way of transverse watertight bulkheads
- in way of double bottom steps.

Elsewhere, plate floors may be arranged at a distance not exceeding 3 m.

b) In general, plate floors are to be continuous between the centre girder and the margin plate.

c) Open floors are to be fitted in way of intermediate frames.

d) Where the double bottom height exceeds 0,9 m, plate floors are to be fitted with vertical stiffeners spaced not more than 1,5 m apart.These stiffeners may consist of flat bars with a width equal to one tenth of the floor depth and a net thickness, in mm, not less than 0,8 $L^{0,5}$.

10.5.3 Girders

a) Side girders are to be arranged in such a way that their distance to adjacent girders or margin plate does not generally exceed 4,5 m.

b) Where the double bottom height exceeds 0,9 m, longitudinal girders are to be fitted with vertical stiffeners spaced not more than 1,5 m apart.

These stiffeners may consist of flat bars with a width equal to one tenth of the girder height and a net thickness, in mm, not less than 0,8 $L^{0,5}$.

c) In way of open floors, side girders are to be provided with stiffeners having a web height which is generally to be not less than 150 mm.

10.5.4 Open floors

a) At each frame between plate floors, open floors are to be arranged consisting of a frame connected to the bottom plating and a reverse frame connected to the inner bottom plating (See Fig 19).

b) Open floors are to be attached to the centreline girder and to the margin plate by means of flanged brackets having a width of flange not less than 1/10 of the local double bottom height.

c) Where frames and reverse frames are interrupted in way of girders, double brackets are to be fitted.

Figure 19 : Open floor

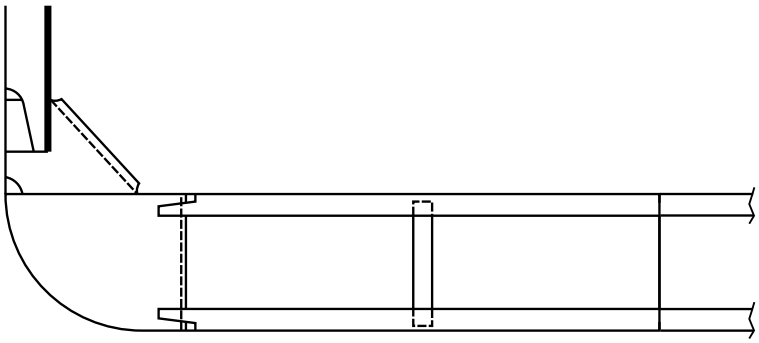

10.6 Bilge keel

10.6.1 Arrangement

Bilge keels may not be welded directly on the shell plating. An intermediate flat, or doubler, is required on the shell plating.

The ends of the bilge keel are to be sniped at an angle of 15° or rounded with large radius. They are to be located in way of a transverse bilge stiffener. The ends of the intermediate flat are to be sniped at an angle of 15°.

In general, scallops and cut-outs are not to be used. Crack arresting holes are to be drilled in the bilge keel butt welds as close as practicable to the ground bar. The diameter of the hole is to be greater than the width W of the butt weld and is to be a minimum of 25 mm (see Fig 20). Where the butt weld has been subject to non-destructive examination, the crack arresting hole may be omitted.

The arrangement shown in Fig 20 is recommended.

The arrangement shown in Fig 21 may also be accepted.

10.6.2 Materials

The bilge keel and the intermediate flat are to be made of steel with the same yield stress and grade as that of the bilge strake.

10.6.3 Scantlings

The net thickness of the intermediate flat is to be equal to that of the bilge strake. However, this thickness may generally not be greater than 15 mm.

Figure 20 : Bilge keel arrangement

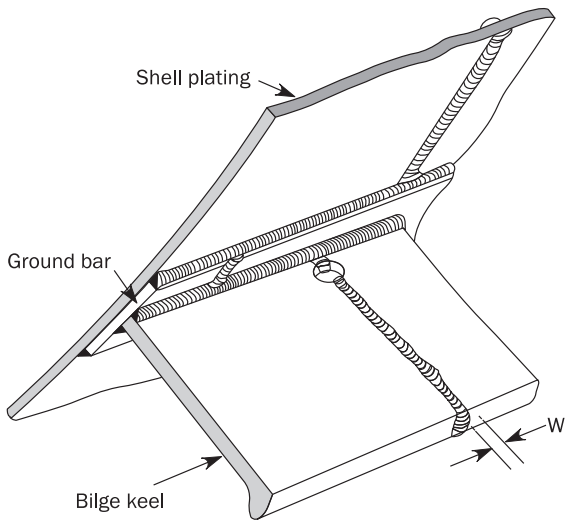

Figure 21 : Bilge keel alternative arrangement

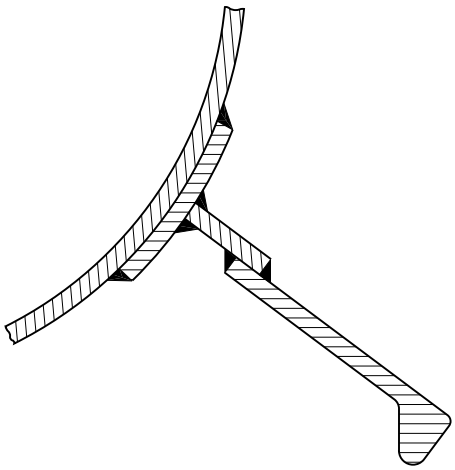

10.6.4 Welding

The intermediate flat, through which the bilge keel is connected to the shell according to [10.6.1], is to be welded as a shell doubler by continuous fillet welds.

The butt welds of the doubler and bilge keel are to be full penetration and shifted from the shell butts.

The butt welds of the bilge plating and those of the doublers are to be flush in way of crossing, respectively, with the doubler and with the bilge keel.

Butt welds of the intermediate flat are to be made to avoid direct connection with the shell plating, in order that they do not alter the shell plating, by using, for example, a copper or a ceramic backing.

11 Side structure

11.1 General

11.1.1 Application

The requirements of this Section apply to longitudinally or transversely framed single and double side structures.

The transversely framed side structures are built with transverse frames possibly supported by side girders (see [5.3.1]).

The longitudinally framed side structures are built with longitudinal ordinary stiffeners supported by side vertical primary supporting members.

11.1.2 General arrangement

Unless otherwise specified, side girders are to be fitted aft of the collision bulkhead up to 0,2L aft of the fore end, in line with fore peak girders.

11.1.3 Sheerstrake

a) The width of the sheerstrake, in m, is to be not less than 0,8 + L / 200, measured vertically, but need not be greater than 1,8 m.

b) The sheerstrake may be either welded to the stringer plate or rounded. If the sheerstrake is rounded, its radius, in mm, is to be not less than 17 ts , where ts is its net thickness, in mm.

c) The upper edge of the welded sheerstrake is to be rounded, smooth, and free of notches. Fixtures, such as bulwarks and eye plates, are not to be directly welded on the upper edge of the sheerstrake, except in fore and aft parts.

   Drainage openings with a smooth transition in the longitudinal direction may be permitted.

d) The transition from a rounded sheerstrake to an angled sheerstrake associated with the arrangement of the superstructures is to be designed to avoid any discontinuities.

   Drawings showing the details of this transition are to be submitted for approval to the Society.

e) The longitudinal seam welds of a rounded sheerstrake are to be located outside the bent area, at a distance not less than 5 times the maximum net thickness of the sheerstrake.

f) The welding of deck fittings onto rounded sheerstrakes is to be avoided within 0,6 L amidships.

11.1.4 Riser attachment

Equipment located on the side shell (e.g. risers, fenders) are to be fitted in way of primary supporting members.

11.2 Longitudinally framed single side

11.2.1 Longitudinal ordinary stiffeners

Longitudinal ordinary stiffeners are generally to be continuous when crossing primary members.

11.2.2 Primary supporting members

a) In general, the side vertical primary supporting member spacing may not exceed 5 frame spacings.

b) In general, the side vertical primary supporting members are to be bracketed to the double bottom transverse floors.

11.3 Transversally framed single side

11.3.1 Frames

a) Transverse frames are to be fitted at every frame.

b) Frames are generally to be continuous when crossing primary members.

Otherwise, the detail of the connection is to be examined by the Society on a case by case basis.

c) In general, the net section modulus of 'tween deck frames is to be not less than that required for frames located immediately above.

11.3.2 Primary supporting members

a) In 'tweendecks of more than 4 m in height, side girders or side vertical primary supporting members or both may be required by the Society.

b) Side girders are to be flanged or stiffened by a welded face plate.

The width of the flanged edge or face plate is to be not less than 22t, where t is the web net thickness, in mm, of the girder.

c) The height of end brackets is to be not less than half the height of the primary supporting member.

11.4 Longitudinally framed double side

11.4.1 General

a) Adequate continuity of strength is to be ensured in way of breaks or changes in width of the double side.

In particular, scarfing of the inner side is to be ensured beyond the cargo hold region.

b) Knuckles of the inner side are to be adequately stiffened.

11.4.2 Primary supporting members

a) The height of side vertical primary supporting members may be gradually tapered from bottom to deck. The maximum acceptable taper, however, is 8 cm per metre.

b) Side vertical primary supporting members supported by a strut and two diagonals converging on the former are to be considered by the Society on a case by case basis.

11.5 Transversally framed double side

11.5.1 General

a) The requirements in [11.4.1] also apply to transversely framed double side.

b) Transverse frames may be connected to the vertical ordinary stiffeners of the inner side by means of struts.

Struts are generally to be connected to transverse frames and vertical ordinary stiffeners of the inner side by means of vertical brackets.

11.5.2 Frames

Transverse frames are to be fitted at every frame.

11.5.3 Primary supporting members

a) Unless otherwise specified, transverse frames are to be supported by side girders if $D \geq 6$ m.

These girders are to be supported by side vertical primary supporting members spaced no more than 3,8 m apart.

b) In the case of units having $4,5 < D < 6$ m, side vertical primary supporting members are to be fitted, in general not more than 5 frame spacings apart.

11.6 Frame connections

11.6.1 General

a) End connections of frames are to be bracketed.

b) Tweendeck frames are to be bracketed at the top and welded or bracketed at the bottom to the deck.

In the case of bulb profiles, a bracket may be required to be fitted at bottom.

c) Brackets are normally connected to frames by lap welds. The length of overlap is to be not less than the depth of frames.

11.6.2 Upper brackets of frames

a) The arm length of upper brackets connecting frames to deck beams is to be not less than the value obtained, in mm, from the following formula:

$$d = \varphi \sqrt{\frac{w + 30}{t}}$$

where:

φ : Coefficient equal to:

- for unflanged brackets: φ = 48
- for flanged brackets: φ = 43,5

w : Required net section modulus of the stiffener, in cm^3, given in items b) and c) and depending on the type of connection

t : Bracket net thickness, in mm.

b) For connections of perpendicular stiffeners located in the same plane (see Fig 22) or connections of stiffeners located in perpendicular planes (see Fig 23), the required net section modulus is to be taken equal to:

- $w = w_2$ if $w_2 \le w_1$
- $w = w_1$ if $w_2 > w_1$

where w_1 and w_2 are the required net section moduli of stiffeners, as shown in Fig 22 and Fig 23.

Figure 22 : Connections of perpendicular stiffeners in the same plane

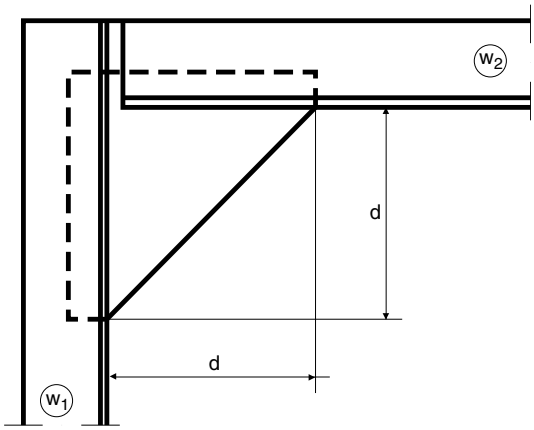

Figure 23 : Connections of stiffeners located in perpendicular planes

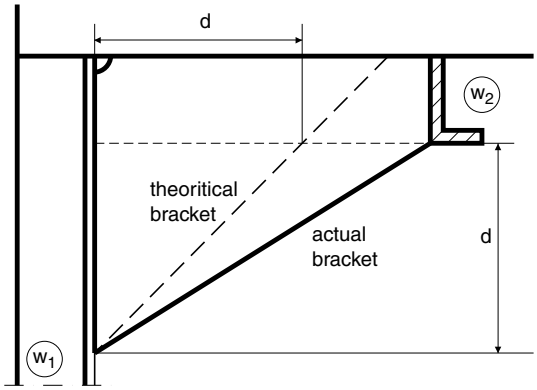

c) For connections of frames to deck beams (see Fig 24), the required net section modulus is to be taken equal to:

- for bracket "A":

  $w_A = w_1$ if $w_2 \le w_1$

  $w_A = w_2$ if $w_2 > w_1$

- for bracket "B":

  $w_B = w'_1$ need not be greater than w_1

where w_1, w'_1 and w_2 are the required net section moduli of stiffeners, as shown in Fig 24.

Figure 24 : Connections of frames to deck beams

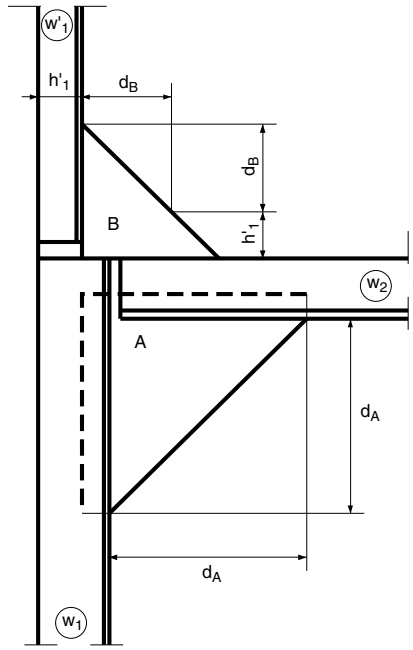

11.6.3 Lower brackets of frames

a) In general, frames are to be bracketed to the inner bottom or to the face plate of floors as shown in Fig 25.

b) The arm lengths d_1 and d_2 of lower brackets of frames are to be not less than the value obtained, in mm, from the following formula:

$$d = \varphi\sqrt{\frac{w + 30}{t}}$$

where:

φ : Coefficient equal to:

- for unflanged brackets: φ = 50
- for flanged brackets: φ = 45

w : Required net section modulus of the frame, in cm^3

t : Bracket net thickness, in mm.

c) Where the bracket net thickness, in mm, is less than 15 L_b, where L_b is the length, in m, of the bracket free edge, the free edge of the bracket is to be flanged or stiffened by a welded face plate.

The net sectional area, in cm^2, of the flange or the face plate is to be not less than 10 L_b.

Figure 25 : Lower brackets of main frames

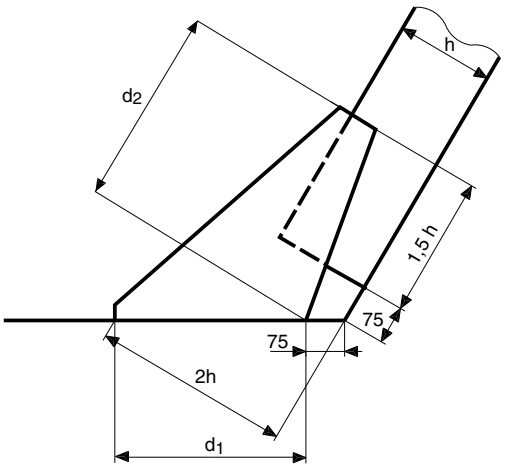

11.7 Openings in the side shell

11.7.1 Position of openings

Openings in the shell plating are to be located at a vertical distance from the decks at side not less than:

- two times the opening diameter, in case of circular opening
- the opening minor axis, in case of elliptical openings.

See also Fig 26.

11.7.2 Local strengthening

a) Openings in the unit sides, e.g. for cargo ports, are to be well rounded at the corners and located well clear of superstructure ends or any openings in the deck areas at sides of hatchways.

b) Openings for sea intakes are to be well rounded at the corners and, within 0,6 L amidships, located outside the bilge strakes. Where arrangements are such that sea intakes are unavoidably located in the curved zone of the bilge strakes, such openings are to be elliptical with the major axis in the longitudinal direction. Openings for stabiliser fins are considered by the Society on a case by case basis. The thickness of sea chests is generally to be that of the local shell plating, but in no case less than 12 mm.

c) Openings in item a) and item b) and, when deemed necessary by the Society, other openings of considerable size are to be adequately compensated by means of insert plates of increased thickness or doublers sufficiently extended in length. Such compensation is to be partial or total depending on the stresses occurring in the area of the openings.

   Circular openings on the sheerstrake need not be compensated where their diameter does not exceed 20% of the sheerstrake minimum width, defined in [11.1.3], or 380 mm, whichever is the lesser, and where they are located away from openings on deck at the side of hatchways or superstructure ends.

12 Deck structure

12.1 General

12.1.1 Application

The requirements of this Section apply to longitudinally or transversely framed deck structures.

12.1.2 General arrangement

a) The deck supporting structure consists of ordinary stiffeners (beams or longitudinals), longitudinally or transversely arranged, supported by primary supporting members which may be sustained by pillars.

b) In units greater than 120 m in length, the zones outside the line of openings of the strength deck and other decks contributing to longitudinal strength are, in general, to be longitudinally framed.

   Where a transverse framing type is adopted for such units, it is considered by the Society on a case by case basis.

c) Adequate continuity of strength is to be ensured in way of:

   - stepped or knuckled strength decks
   - changes in the framing system.

   Details of structural arrangements are to be submitted for review to the Society.

d) Where applicable, deck transverses of reinforced scantlings are to be aligned with floors.

e) Deck supporting structures under deck machinery, cranes and king posts are to be adequately stiffened.

f) Pillars or other supporting structures are generally to be fitted under heavy concentrated cargoes.

g) Special arrangements, such as girders supported by cantilevers, are considered by the Society on a case by case basis.

h) Where devices for lashing arrangements and/or corner fittings for containers are directly attached to deck plating, provision is to be made for the fitting of suitable additional reinforcements of the sizes required by the load carried.

i) Stiffeners are also to be fitted in way of the ends and corners of deck houses and partial superstructures.

j) The topside supports are to be fitted in way of bulkheads or beams.

12.1.3 Construction of watertight decks

Watertight decks are to be of the same strength as watertight bulkheads at corresponding levels. The means used for making them watertight, and the arrangements adopted for closing openings in them, are to be to the satisfaction of the Society.

12.1.4 Stringer plate

a) The width of the stringer plate, in m, is to be not less than 0,8 + L / 200, measured parallel to the deck, but need not be greater than 1,8 m.

However, the stringer plate is also to comply with the requirements of the Ship Rules, Pt B, Ch 4, Sec 1, [2.3] and Pt B, Ch 4, Sec 1, [2.4.5].

Rounded stringer plates, where adopted, are to comply with the requirements of [11.1.3] for rounded sheerstrakes.

b) Stringer plates of lower decks not extending over the full unit's length are to be gradually tapered or overlapped by adequately sized brackets.

12.2 Longitudinally framed deck

12.2.1 General

a) Deck longitudinals are to be continuous, as far as practicable, in way of deck transverses and transverse bulkheads.

Other arrangements may be considered, provided adequate continuity of longitudinal strength is ensured.

b) In general, the spacing of deck transverses is not to exceed 5 frame spacings.

c) In case of deck transverses located above the deck, longitudinal girders are to be fitted above the deck, in addition of tripping brackets.

12.2.2 Longitudinal ordinary stiffeners

a) In units equal to or greater than 120 m in length, strength deck longitudinal ordinary stiffeners are to be continuous through the watertight bulkheads and/or deck transverses.

b) Frame brackets, in units with transversely framed sides, are generally to have their horizontal arm extended to the adjacent longitudinal ordinary stiffener.

12.3 Transversely framed deck

12.3.1 General

In general, deck beams are to be fitted at each frame.

12.4 Pillars

12.4.1 Pillars are to be fitted, as far as practicable, in the same vertical line.

12.4.2 In general, pillars are to be fitted below winches, cranes, windlasses and steering gear, in the engine room and at the corners of deckhouses.

12.4.3 In tanks, solid or open section pillars are generally to be fitted. Pillars located in spaces intended for products which may produce explosive gases are to be of open section type.

12.4.4 Tight or non-tight bulkheads may be considered as pillars, provided that each vertical stiffener complies with the applicable buckling requirement in Ch 1, Sec 8, [4], taking into account:

- a width of associated plating equal to 35 times the plating net thickness
- the axial load supported by the analysed stiffener
- a resistance partial safety factor, γ_R, equal to 1,15 for column buckling and 1,05 for torsional and local buckling.

12.5 Openings in the strength deck

12.5.1 Position of openings and local strengthening

a) Openings in the strength deck are to be kept to a minimum and spaced as far apart from one another and from breaks of effective superstructures as practicable. Openings are generally to be avoided in way of the connection between deck and side.

The dashed areas in Fig 22 are those where openings are generally to be avoided. The meaning of the symbols in Fig 22 is as follows:

a : Transverse dimension of openings

g : Transverse dimension of the area where openings are generally to be avoided in way of the connection between deck and side (as shown in Fig 26), deck and longitudinal bulkheads, deck and large deck girders:

- in the case of circular openings: g = 2 a
- in the case of elliptical openings: g = a

b) No compensation is required where the openings are:

- circular of less than 350 mm in diameter and at a distance from any other opening in compliance with Fig 27
- elliptical with the major axis in the longitudinal direction and the ratio of the major to minor axis not less than 2.

c) If the openings arrangements do not comply with the requirements of the present Sub-Article, the hull girder longitudinal strength assessment is to be carried out by subtracting such opening areas.

Figure 26 : Position of openings in the strength deck

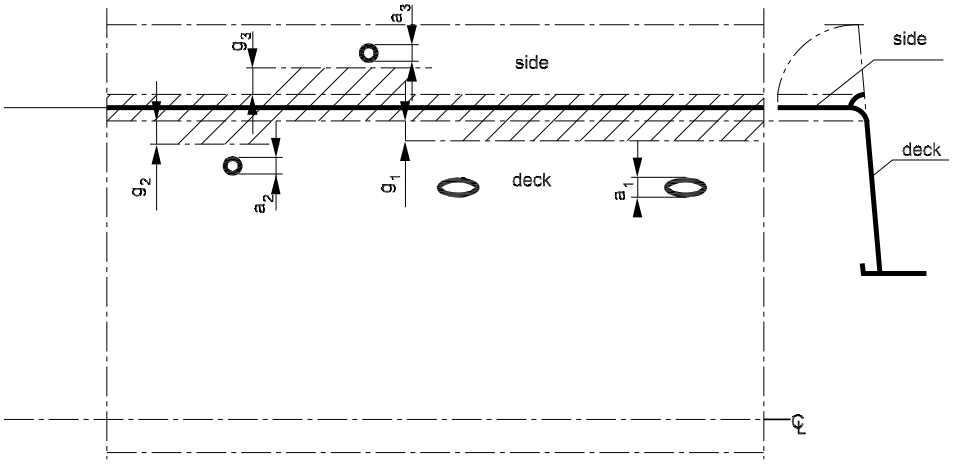

Figure 27 : Circular openings in the strength deck

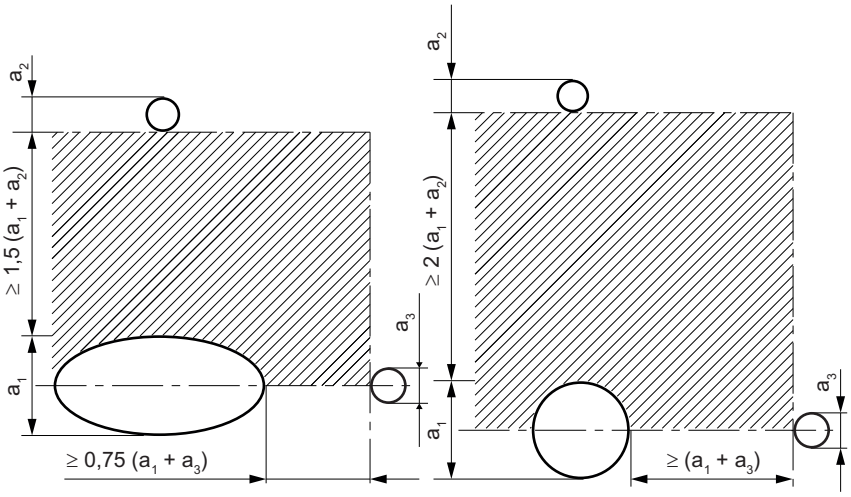

12.5.2 Corners of hatchways

a) For hatchways located out of the cargo area, insert plates are, in general, not required in way of corners where the plating cut-out has an elliptical or parabolic profile and the half axes of elliptical openings, or the half lengths of the parabolic arch, are not less than:
   - 1/20 of the hatchway width or 600 mm, whichever is the lesser, in the transverse direction
   - twice the transverse dimension, in the fore and aft direction.

b) Where insert plates are required, their thickness and arrangement may be considered by the Society in a case by case basis.

12.6 Openings in decks other than the strength deck

12.6.1 The requirements for such openings are similar to those in [12.5.1] for the strength deck. However, circular openings need not to be compensated.

12.6.2 Corners of hatchway openings are to be rounded, as specified in [12.5.2] for the strength deck; insert plates may be omitted, however, when deemed acceptable by the Society.

13 Reinforcements in way of supporting structures for hull attachments

13.1 Local arrangement

13.1.1 Generally, the supports for attachments and appurtenances are to be fitted in way of longitudinal and transversal bulkheads or in way of deck beams. Other supports are to be fitted in way of large primary supporting members.

The main structure may be locally reinforced by means of insert plates.

When the supports are only located on transverse web beam, the longitudinal structure is to be adequately reinforced.

The cut out in the deck transverse for the passage of ordinary stiffeners are to be closed in way of supports.

Particular attention is to be paid to buckling below supports.

An example of local supporting structure for hull attachment is indicated in Fig 28.

Figure 28 : Example of local reinforcements in way of supporting structure

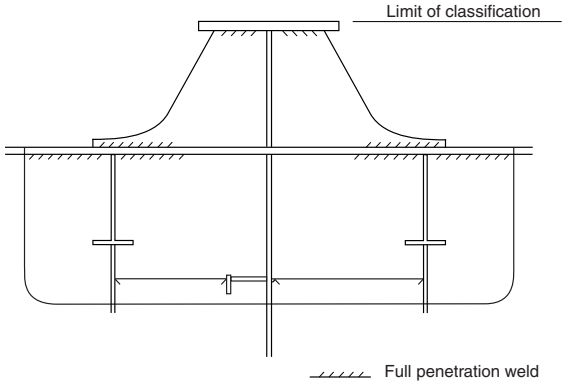

14 Welding and weld connections

14.1 General

14.1.1 The standards applicable for offshore areas and for ship areas are different, as stated in [14.2]and [14.3].

14.2 Offshore areas

14.2.1 NR426, Construction Survey of Steel Structures of Offshore Units and Installations, is to be applied for offshore areas.

14.2.2 For size of fillet welds, reference may be made to AWS D1.1M:2020 Structural Welding Code - Steel.

14.3 Ship areas

14.3.1 Pt B, Ch 13, Sec 1 to Pt B, Ch 13, Sec 3 of the Ship Rules are to be applied for ship areas.

14.3.2 For the members, the web is to be connected to the face plate by means of double continuous fillet welding.
It is recommended to use continuous fillet welding to connect the web to its associated shell plating. The throat thickness of such a welding is neither to be less than the value specified in Pt B, Ch 13, Sec 3, Tab 4 of the Ship Rules nor greater than 0,45 t.
Discontinuous welds and scallop welds are generally not allowed in the cargo tank area.

14.3.3 The welding factors for some hull structural connections are specified in Tab 5. These welding factors are to be used, in lieu of the corresponding factors specified in Pt B, Ch 13, Sec 3, Tab 1 of the Ship Rules to calculate the leg length of fillet weld T connections according to Pt B, Ch 13, Sec 3, [3.2] of the Ship Rules. For the connections of Tab 5, continuous fillet welding is to be adopted.

Table 5 : Welding factor w_F

Hull area	Connection		Welding factor w_F
	of	to	
Double bottom in way of cargo tanks	girders	bottom and inner bottom plating	0,48
		floors (interrupted girders)	0,48
	floors	bottom and inner bottom plating	0,48
		inner bottom in way of bulkheads or their lower stools	0,63
		girders (interrupted floors)	0,48

14.3.4 Leg length of fillet welds for transverse web frames and horizontal stringers on transverse bulkheads are to be reinforced as shown in Fig 29 and Fig 30.
As a rule, full penetration welds are to be applied as shown in Fig 29 and Fig 30. The length of full penetration welds is not to be less than the greater of the following values:

a) length of the area where the tension stress normal to welds is above 0,3 times the tensile strength of the filler metal

b) 400 mm.

The tension stress and shear stress required in a) and b) are to be calculated based on the provisions of Ch 1, Sec 9, using a fine mesh finite element model. The size of elements is not to be above 100 mm x 100 mm. Values of stresses calculated at element centroid are to be used.

The length of areas defined in a) and b) is to include an entire number of 100 mm x 100 mm elements.

14.3.5 The minimum leg length of continuous fillet welding is not to be less than 6 mm for assemblies of high tensile steel.

Figure 29 : Reinforcement of leg length of a web frame

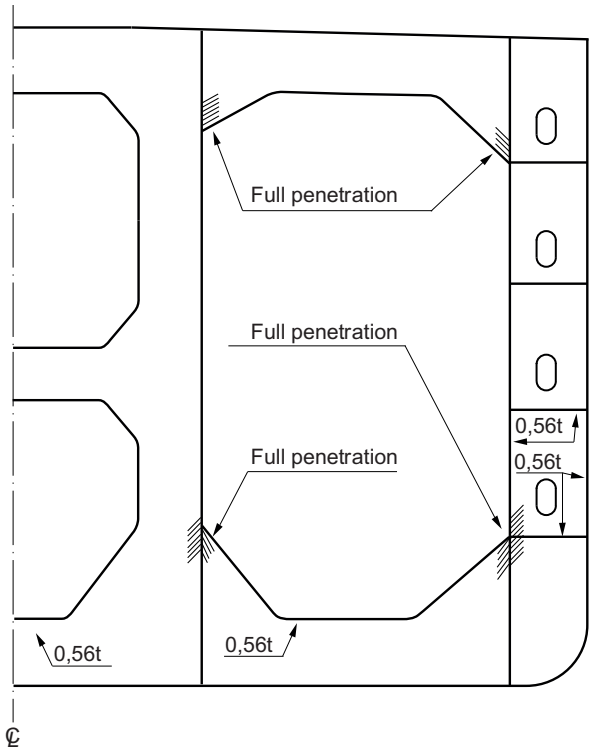

Figure 30 : Reinforcement of leg length for a stringer

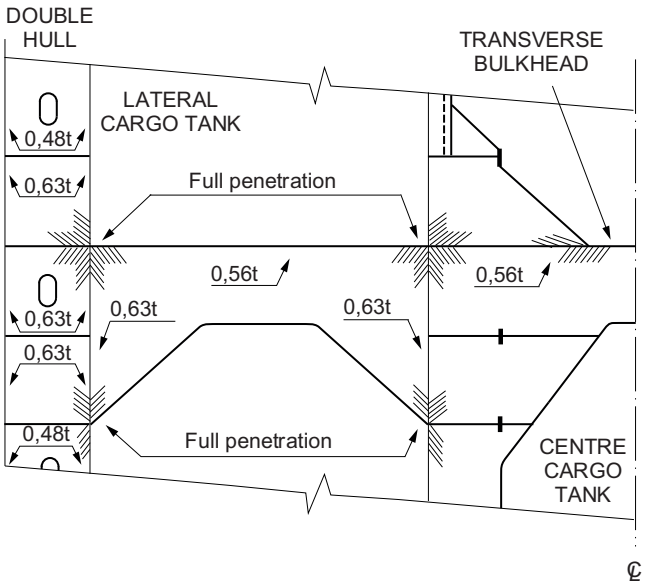

Section 4 Hydrodynamic Analysis

1 General

1.1 Principle

1.1.1 Application

Hydrodynamic analysis is to be performed for both site conditions and towing/transit phases, taking into account the probability levels defined in [1.1.3].

The target of hydrodynamic analysis is to assess design values and distributions of parameters related to wave loading, defined in [1.1.2].

Direct calculations are to be carried out. Hydrodynamic calculations may be calibrated based on model tests.

1.1.2 Parameters related to wave loading

The hydrodynamic analysis is to result in the following parameters specified with their distribution over the length of the unit:

- wave induced vertical bending moment
- wave induced horizontal bending moment
- wave induced vertical shear force
- local accelerations in three directions for upright and inclined conditions
- relative wave elevation in upright condition.

The hydrodynamic analysis is also to result in the motions and global accelerations at the floating unit centre of gravity:

- surge acceleration
- sway acceleration
- heave acceleration
- yaw acceleration
- roll amplitude and acceleration
- pitch amplitude and acceleration.

1.1.3 Return period of considered environment

The parameters defined in [1.1.2] are to correspond to a probability level of:

- once in 100 years (typically referred to by a probability level of $10^{-8,7}$) for the unit on site
- once in 10 years (typically referred to by a probability level of $10^{-7,7}$) for the unit in transit conditions, except when otherwise specified by the party applying for Classification (see Ch 1, Sec 1, [1.10.3]).
- 10^{-5} when requested for deterministic fatigue analysis, see Ch 1, Sec 10, [4].

For the inspection cases the environmental data may be taken into account at a lower return period.

1.1.4 Documents to be submitted

List of documents to be submitted is given in Ch 1, Sec 1, [6.1.1], item b).

1.2 Hydrodynamic analysis

1.2.1 Software

Assessment by direct calculation is to be carried out using a recognized software, generally using three dimensional potential flow based on diffraction radiation theory. The software is to be documented.

2 Environmental data for hydrodynamic analysis

2.1 General

2.1.1 Requirements of the present Section are complementary to Part B, Chapter 2, which remain applicable, except where otherwise specified.

2.2 Nature of environmental data

2.2.1 General

Two types of environmental data may be available:

- long-term data: wave description over a long period of time
- short-term data: wave description of extreme sea states.

2.2.2 Long-term data

Two types of long-term environmental data may be accepted:

a) Scatter diagrams

The sea state statistic data are generally provided under the form of a "scatter diagram" (table including significant wave height, wave period and number of occurrences). The reference duration on which the scatter diagram is built is to be indicated.

In order to ensure a good accuracy of results, classes of wave height and wave periods are not to be too coarse. Typically, intervals of 1 meter in significant wave height and 1 second in wave zero-up crossing period are to be used.

b) Hindcast data

Hindcast data consist of a time history of sea states (wave spectrum parameters, wave height, wave period, wave direction...), and eventually wind and current.

2.2.3 Short-term data

Short-term data consist of information about extreme environmental conditions, given by metocean specialist. They can be presented under extreme wave height and most probable associated period or contours wave height/wave period. Information on sea state duration is to be provided.

2.2.4 Combination of wave components

In the case of more than one wave component in environmental data, information about the combinations of different wave components (joint probabilities) is to be provided. When no information is available from metocean specification, the combinations to be used are defined in NR493, Classification of Mooring Systems for Permanent and Mobile Offshore Units.

When relevant, and particularly in cyclonic areas, information is to encompass seasonal extremes.

2.3 Environmental data to be submitted

2.3.1 Description of on-site environment

For hydrodynamic analysis, the following environmental data are to be submitted to the Society:

- General description of environmental conditions.
- Description of wave spectral content: for each component, wave spectrum with the specification of its characteristic parameters, directional spreading if any, and prevailing directions.
- Long-term data as defined in [2.2.2]. A minimum of 10-year data is to be used to derive properly 100 years responses. Information of sea state duration is to be provided.
- Short-term data as defined in [2.2.3]. Extreme values are to be given at least for a return period of 100 years.
- Restrictions of relative headings between the different components, if any.
- Information regarding combination of wave components as required in [2.2.4], when available.

2.3.2 Description of transit environment

A description of routes used for transit is to be submitted to the Society. In addition, for each geographic sector on which wave description is defined, the following items are to be submitted:

- time spent in each sector
- description of wave spectral content: for each component, wave spectrum with the specification of its characteristic parameters, directional spreading if any, and prevailing directions
- restrictions of relative headings between the different components, if any
- short-term data as defined in [2.2.3]. Extreme values are to be given at least for a return period consistent with [1.1.3]
- when available, long-term data as defined in [2.2.2]. The amount of data is to be at the satisfaction of the Society.

3 Design conditions

3.1 Loading conditions

3.1.1 Loading conditions used for hydrodynamic analysis are to be selected from those specified in the loading manual.

If the party applying for Classification specifies additional loading conditions, these conditions are to be taken into account. All parameters required by the Rules for the definition of these conditions are to be specified and stated in the Design Criteria Statement.

3.1.2 As a minimum, the following loading conditions are to be considered:

- on-site condition at design maximum draught, as defined in Ch 1, Sec 1, [3.2.11]
- on-site condition at design minimum draught, as defined in Ch 1, Sec 1, [3.2.11]
- on-site condition in still water giving maximum shear force
- at least one condition in towing/transit.

The selection of draughts corresponding to each loading condition is to be at the satisfaction of the Society.

3.2 Advance speed

3.2.1 Hydrodynamic analysis for on-site conditions are to be performed using an advance speed equal to zero.

3.2.2 Hydrodynamic analysis for towing/transit is to take into account both of the following cases:

- advance speed equal to zero
- advance speed as specified by the party applying for classification.

4 Modelling principles

4.1 Hydrodynamic mesh

4.1.1 The wetted surface of the unit is to be modelled by elements having a size consistent with wave parameters (wave length and wave amplitude in particular). Mesh dimension of 2 meters is generally recommended.

The model is to take into account the effects of appendices if any, and unit trim.

4.2 Mass distribution

4.2.1 Information regarding mass distribution along all axes and in particular gyration radius along longitudinal axis is to be submitted for each loading condition.

Effects of free surface moment are to be taken into account and duly justified.

4.3 Connection with other structures

4.3.1 The society may request to take into account the connection of the floating unit with the seabed or other structures (risers, mooring...).

4.4 Water depth

4.4.1 Water depth is to be taken as indicated in the environmental data.

5 Floating unit responses

5.1 Results

5.1.1 The hydrodynamic analysis is to provide the following results for all loading conditions defined in [3.1]:

- floating unit natural periods, and
- for all parameters defined in [1.1.2]:
  - Response Amplitude Operators (RAOs) [3.1]
  - floating unit extreme values (single amplitude) at probability level defined in [1.1.3].

5.1.2 For all loading conditions, diagrams representing the variations of all parameters defined in [1.1.2] over the length of the floating unit and for various headings are to be submitted to the Society for review.

5.2 Response Amplitude Operators

5.2.1 General

RAOs (Response Amplitude Operators) of all parameters defined in [1.1.2] are to be calculated for each degree of freedom.

5.2.2 Wave headings

RAOs are to be calculated:

- for different headings including pure head, following and pure beam seas. RAOs are to be presented over all incidences
- with a step in headings not exceeding 15°, generally; the step is not to be less than 5° if directional spreading is used.

5.2.3 Wave frequencies

RAOs are to be calculated:

- for wave circular frequencies covering the anticipated sea states and spectra and typically from 0,1 rad/s to 2 rad/s
- with a step in wave circular frequencies not exceeding 0,05 rad/s. Refinements are to be performed around natural periods of the unit, in particular in roll.

5.2.4 Roll damping

Values and methodology taken into account for roll damping are to be duly justified.

5.3 Calculation of unit responses

5.3.1 Wave heading

Unit responses are to be calculated for all wave directions with a step not exceeding 15°. Pure head and following seas, and pure beam seas are to be considered.

The requirements of [5.3.2] and [5.3.3] are also to be considered.

5.3.2 Wave heading in transit/towing

In towing conditions, all wave headings (as defined in [5.3.1] are to be taken at the same probability (no prevailing direction) unless otherwise specified as stated in Ch 1, Sec 1, [1.10].

5.3.3 Wave heading for Single Point Moored units

For site conditions of Single Point Moored units (SPM), all wave headings (as defined in [5.3.1]) are to be considered unless:

- restrictions of headings for operating conditions are available
- a heading analysis performed at the satisfaction of the Society demonstrates that several wave headings cannot occur in 100 years environments (including waves, current and wind).

5.3.4 Directional spreading on site

Directional spreading may be considered in accordance with metocean specification for site conditions.

5.3.5 Directional spreading in towing/transit

Directional spreading for towing/transit conditions may be considered in accordance with towing/transit metocean specification. As an alternative, the formulation given in [5.3.6] may be used.

5.3.6 Alternative formulation for directional spreading in towing/transit

The wave energy density function can be written as:

$S(\omega,\theta) = D(\theta)\, s(\omega)$

where:

$D(\theta)$: Directional spreading function, characterizing the directional distribution of the wave energy around a main direction θ_m; by default, this function is to be taken as:

$D(\theta) = k \cos^2(\theta)$

with k satisfying:

$$\sum_{\theta m - 90°}^{\theta m + 90°} D(\theta) = 1$$

$s(\omega)$: Wave energy spectrum.

5.3.7 Sensitivity analysis

During hydrodynamic analysis, sensitivity analyses are to be performed on the following items, if deemed relevant:

- Wave parameters (wave spectrum parameter, direction...).
- Wave periods:
  - Based on wave height/wave period contours.
  - Performing a sensitivity study around the most probable wave period as defined by metocean specification. A range of at least ± 15% around the most probable peak period is to be considered.
- Other parameters (trim, loading of unit,...).

5.4 Design wave loads for structural analysis

5.4.1 The design values and distributions of the wave loads derived from extreme values obtained as per [5.1] are to be determined as defined in Ch 1, Sec 5, [3].

Section 5 Design Loads

Symbols

a_H : Heave acceleration, in m/s², defined in [3.4.4]

A_R : Roll acceleration, in rad/s², roll amplitude, in rad, defined in [3.4.5]

a_{SU} : Surge acceleration, in m/s², defined in [3.4.2]

a_{SW} : Sway acceleration, in m/s², defined in [3.4.3]

B : Moulded breadth, in m, taken equal to the greatest moulded breadth measured amidships at the maximum draught T

C : Wave parameter, to be taken equal to:

- for 65 m ≤ L < 90 m:

$$C = (118 - 0{,}36L)\frac{L}{1000}$$

- for 90 m ≤ L < 300 m:

$$C = 10{,}75 - \left(\frac{300 - L}{100}\right)^{1{,}5}$$

- for 300 m ≤ L ≤ 350 m:
  C = 10,75
- for 350 < L ≤ 500 m

$$C = 10{,}75 - \left(\frac{L - 350}{150}\right)^{1{,}5}$$

C_B : Total block coefficient, equal to:

$$C_B = \frac{\Delta}{1{,}025LBT}$$

C_B not to be taken greater than 1

d_0 : Distance, in m, to be taken equal to:

- d_0 = 0,02 L for 65 m ≤ L < 120 m
- d_0 = 2,4 for L ≥ 120 m

g : Gravity acceleration, in m/s², taken equal to 9,81

L : Length, in m, as defined in Ch 1, Sec 1, [3.2.6]

n : Navigation coefficient, defined in Tab 1

T : Maximum draught, in m, as defined in:

- for site condition: Ch 1, Sec 1, [3.2.11]
- for transit condition: Ch 1, Sec 1, [3.2.12]

T_1 : Draught associated to the loading condition considered

V_S : Maximum ahead speed in transit, in knots

z_{TOP} : Z co-ordinate, in m, of the highest point of the tank in the z direction

α_P : Pitch acceleration, in rad/s², defined in [3.4.6]

α_R : Roll acceleration, in rad/s², roll amplitude, in rad, defined in [3.4.5]

α_Y : Yaw acceleration, in rad/s², defined in [3.4.7]

Δ : Moulded displacement, in tonnes, at draught T, in sea water (density ρ = 1,025 t/m³)

ρ : Sea water density, in t/m³, to taken equal to 1,025

ρ_L : Density, in t/m³, of the liquid carried x, y, z

x, y, z : X, Y and Z co-ordinates, in m, of the calculation point with respect to the reference co-ordinate system defined in Ch 1, Sec 1, [3.3].

1 General

1.1 Principles

1.1.1 Application

The design loads are to be determined in accordance with the present Section, considering the relevant loading conditions and associated loads as listed in Ch 1, Sec 1, [1.5.4].

1.1.2 Site conditions

The design loads for site conditions are to be determined as stated in the present Section, taking into account the results of hydrodynamic analysis (see Ch 1, Sec 4, [5]). Two situations may be considered:

- when a navigation notation completes the site notation of the unit, the rule values of wave loads for this navigation notation are to be superimposed with the values obtained from hydrodynamic analysis, as defined in [3.2]
- when no navigation notation is granted to the unit for on-site conditions, the wave loads obtained from hydrodynamic analysis are to be superimposed with the rule values calculated for sheltered area, as defined in [3.2].

1.1.3 Transit conditions

The design loads for transit conditions are to be determined as stated in the present Section, taking into account the results of hydrodynamic analysis (see Ch 1, Sec 4, [5] and Ch 1, Sec 1, [1.10.3]). Two situations may be considered:

- when a navigation notation completes the transit notation of the unit, the rule values of wave loads for this navigation notation are to be superimposed with the values obtained from hydrodynamic analysis, as defined in [3.2]
- when no navigation notation is granted to the unit for transit conditions, the wave loads obtained from hydrodynamic analysis are to be used, as defined in [3.2].

1.2 Definitions

1.2.1 Still water loads

Still water loads are those acting on the ship at rest in calm water.

1.2.2 Wave loads

Wave loads are those due to wave pressures and ship motions.

1.2.3 Dynamic loads

Dynamic loads are those that have a duration much shorter than the period of the wave loads.

1.2.4 Local loads

Local loads are pressures and forces which are directly applied to the individual structural members (plating panels, ordinary stiffeners and primary supporting members):

- still water local loads are constituted by the hydrostatic external sea pressures, hydrostatic internal liquid pressure and the static pressures and forces induced by the gravity
- wave local loads are constituted by the external sea pressures due to waves and the inertial pressures and forces induced by the ship accelerations
- dynamic local loads are constituted by the impact and sloshing pressures.

For structural watertight elements located below the deepest equilibrium waterline (excluding side shell structural elements) which constitute boundaries intended to stop vertical and horizontal flooding, the still water and wave pressures in flooding conditions are also to be considered.

1.2.5 Hull girder loads

Hull girder loads are internal forces and moments which result from the local loads acting on the unit.

1.2.6 Loading conditions

A loading condition is a distribution of weights carried onboard the unit.

1.2.7 Load case

A load case is a combination of hull girder and local loads.

1.3 Application criteria

1.3.1 Hull girder loads

The wave and dynamic hull girder loads are to be used for the determination of:

- the hull girder strength, according to the requirements of Ch 1, Sec 6; and
- the structural scantling of platings, ordinary stiffeners and primary supporting members contributing to the hull girder strength, in combination with the local loads given in Articles [5] and [6], according to the requirements in Ch 1, Sec 7; Ch 1, Sec 8 and Ch 1, Sec 9.

1.3.2 Load cases

The local loads defined in Articles [5] and [6] for the transit and site conditions are to be calculated in each of the mutually exclusive load cases described in Article [4].

1.3.3 Unit motions and global accelerations

The wave local loads are to be calculated on the basis of the reference values of unit motions and global accelerations specified in [3.4].

1.3.4 Calculation and application of local loads

The criteria for calculating:

- still water local loads
- wave local loads on the basis of the reference values of unit motions and global accelerations,

are specified in Articles [5] and [6].

1.3.5 Flooding conditions

The still water and wave pressures in flooding conditions are specified in [6.6].

1.3.6 Accidental loading cases

The design of the floating unit is to consider the possibility of accidental loads as may result from collisions, dropped objects, fire or explosions (see Ch 1, Sec 9, [3]).

Accidental loading cases may be required for the transit and site phases.

Accidental loading cases according to Pt B, Ch 2, Sec 3, [1.5] are also to be calculated.

In accidental conditions, environmental loads are to be evaluated taking into account the circumstances in which the considered situation may realistically occur, and the time needed for evacuation or other remedial action. The return period of such environmental loads is generally taken as 1 year.

1.3.7 Load definition criteria to be adopted in structural analyses of plates and secondary stiffeners

The present requirement applies for the definition of local loads to be used in the scantling checks of plating according to Ch 1, Sec 7 and ordinary stiffeners according to Ch 1, Sec 8.

Load model:

a) When calculating the local loads for the structural scantling of an element which separates two adjacent compartments, the latter may not be considered simultaneously loaded. The local loads to be used are those obtained considering the two compartments individually loaded.

b) For elements of the outer shell, the local loads are to be calculated considering separately:
   - The still water and wave external sea pressures, considered as acting alone without any counteraction from the ship interior. This calculation is to be done considering the maximum draught
   - The still water and wave differential pressures (internal minus external sea pressure) considering the compartment adjacent to the outer shell as being loaded. This calculation is to be made considering the minimum draught.

Note 1: The external wave pressure in load case “b” as defined in Article [4] is to be taken equal to 0.

In the absence of more precise information, the unit minimum draught at site T_{mini}, in m, is to be obtained from the following formula:

$T_{mini} = 2 + 0,02\ L$

1.3.8 Load definition criteria to be adopted in structural analyses based on three dimensional structural models

The present requirement applies for the definition of local loads to be used in the scantling checks of primary supporting members. For primary supporting members a three dimensional structural model is required.

The most severe loading conditions and associated draught for the structural elements under investigation are specified in Ch 1, Sec 9.

2 Still water loads

2.1 Loading manual

2.1.1 General

A loading manual is to be submitted for approval.

The loading manual is to be approved by the Owner.

In addition the requirements given from [2.1.2] to [2.1.8] are to be satisfied.

2.1.2 Lightweight

The lightweight distribution is to be submitted.

The estimation and distribution of the lightweight is to include the topside loads:

- in dry conditions for transit
- in wet conditions at site (including loads from mooring system in case of pre-tension in lines).

The interface management quality plan for co-ordination between shipyard and topsides fabrication yard and the procedures for transfer of data for update of stability manual are to be addressed.

Lightweight of topsides and hull are to be identified independently.

2.1.3 Principle for loading conditions

For a floating unit with mainly ongoing loading/unloading process a special study is to be carried out to evaluate the sequence of filling with respect to draught, trim and heel restrictions, if any. Attention is to be paid to minimizing free surface areas (sloshing, stability).

The study is initially to provide the envelopes of still water bending moment and shear force, and the data for a certain number of load patterns, for which the strength of primary structure will be evaluated, as specified in the present Chapter.

2.1.4 Design loading conditions

The hull girder is to be designed to allow flexibility in cargo loading. Any combination of adjacent empty and full cargo tanks are to be permitted over the full operating draught range (transit draught to scantling draught), with the limitation of allowable bending moment, shear force and minimum draught or otherwise as approved by the Owner.

The design loading conditions are to be separated into four categories:

- maximum / minimum conditions at site
- intermediate conditions at site
- inspection conditions at site
- maximum / minimum conditions during transit.

2.1.5 Maximum / minimum loading conditions

The maximum condition is to consider the unit with maximum draught and with all compartments filled to their maximum capacity.

The minimum conditions are to be divided into installation condition at site and minimum operational draught.

2.1.6 Intermediate loading conditions

Several intermediate loading conditions must be evaluated in the loading booklet to reflect the constant loading/ unloading process and to estimate the maximum values of still water bending moment and shear force.

The intermediate loading conditions must be based on the operating requirements which need to be mentioned in the loading booklet.

The intermediate conditions must also reflect the difference in loading and unloading sequences.

The Society reserves its right to require further loading conditions to take into account change in loading pattern as a consequence of human failure and pump system abnormalities (redundancy of pumps).

2.1.7 Inspection and repair loading conditions

Inspection and repair conditions have usually to be combined with the same values for wave loads as given for the maximum, minimum and intermediate conditions.

However, for units anchored in areas with occasional severe weather conditions (such as tropical hurricanes), certain reductions of the wave loads may be considered for those conditions. In other words, an increase of the still water bending moment and still water shear force above the maximum values defined by maximum, minimum and intermediate conditions may be accepted provided the Owners written agreement.

2.1.8 Transit condition to intended site

The loading cases for the transit between shipyard and the intended site must be available in the loading manual. Values of trim and draught must be chosen to reduce the slamming and bow impact on the unit.

The criteria of the Rules for the transit conditions are based directly on the magnitude and distribution of the still water bending moment, shear force and draught. The loading case is therefore to be available early in the design phase.

2.2 Hull girder still water loads

2.2.1 Transit and site loads

The hull girder still water loads as per [2.2.2] and [2.2.3] have to be defined for both transit and on-site conditions. For this purpose, two distinct sets of still water bending moments and shear forces are to be specified.

2.2.2 Still water bending moment distribution

Design or allowable still water bending moment distribution is to be presented in a diagram or a table showing the values for bending moment at the position of centre of each compartment and at each transverse bulkhead.

2.2.3 Still water shear force distribution

Design or allowable still water shear force distribution is to be presented in a diagram or a table showing the values for shear force at the position of each transverse bulkhead.

2.3 Loading instrument

2.3.1 The loading instruments are to be in accordance with the requirements of Pt B, Ch 1, Sec 5, [3] of the Ship Rules. A floating unit with service notation as given in Ch 1, Sec 1, [1.2.1], is considered as belonging to “Category I ships”.

2.3.2 The loading instrument is also to perform stability calculations according to the procedures indicated in the Ship Rules as referenced above.

3 Wave loads

3.1 Transit and site conditions

3.1.1 Wave loads defined in the present Article are to be processed for both transit and on-site conditions. For this purpose, two distinct sets of design wave loads are to be considered.

3.2 Determination of the design wave loads

3.2.1 Definitions

The following terms are used to describe the wave loads:

- Wave load values:

  Wave load parameters constant along the length of the unit (absolute unit motions and accelerations at the centre of gravity of the unit).

- Wave load distributions:

  Wave load parameters varying along the length of the unit (e.g. hull girder wave loads, relative wave elevation).

3.2.2 Design values and distributions for ship areas

For ship areas, the design values and distributions of wave loads are the maximum between:

- Hydrodynamic values and distributions defined in [3.2.4]
- Minimum values and distributions (for site condition only) defined in [3.2.7]
- Rule values and distributions, if a navigation notation is granted, as defined in [3.2.5]

The design wave loads are to be entered in the Design Criteria Statement.

The following design values are to be provided:

- Absolute motions and global accelerations at the centre of gravity of the unit:
  - surge acceleration
  - sway acceleration
  - heave acceleration
  - yaw acceleration
  - roll amplitude and acceleration
  - pitch amplitude and acceleration

Note 1: Amplitude and acceleration in roll and pitch cannot be dissociate from each other. The rule values are to be adopted unless that hydrodynamic value of either the amplitude or the acceleration are found higher. In this case, both the amplitude and acceleration are to be adopted based on hydrodynamic values.

The following design distributions are to be provided:

- Hull girder loads defined in [3.3] and detailed below:
  - Vertical wave bending moment - Hogging
  - Vertical wave bending moment - Sagging
  - Horizontal wave bending moment
  - Vertical wave shear force - positive
  - Vertical wave shear force - negative.
- Relative wave elevation, defined in [3.5.1].
- Local accelerations in three directions for upright and inclined conditions, defined in [3.6].

3.2.3 Design values and distributions for offshore areas

For offshore areas, the design values and distributions are to be based on hydrodynamic analysis as defined in [3.2.4].

3.2.4 Hydrodynamic values and distributions

Hydrodynamic values and distributions of the wave loads are based on the results of the hydrodynamic analysis specified in Ch 1, Sec 4.

At preliminary stage, if the hydrodynamic analysis is not available, the Society may accept hydrodynamic values and distributions determined by the Designer, if duly justified.

3.2.5 Rule values and distributions

When a navigation notation as defined in Ch 1, Sec 1, [1.2.3] is granted to complete the site or the transit notation, rule values and distributions are to be calculated based on the formulas defined in the present Section and with the corresponding navigation coefficient n, given in Tab 1.

Note 1: It is reminded that the determination of fore and aft parts of the unit is established on a case-by-case basis, depending of the main wave heading (see Ch 1, Sec 1, [3.2.8]).

3.2.6 Selection of the navigation notation

When hydrodynamic values and distributions are significantly above rule values and distributions, the Society reserves the right to change the navigation notation with a more severe one.

3.2.7 Minimum values and distributions

Minimum values and distributions are rule values calculated for **sheltered area** according to Tab 1.

3.2.8 Factors of environment

The following factors of environment are to be defined with their distribution along the length of the unit:

f_{VBM} : Factor of environment for vertical wave bending moment:

$$f_{VBM} = \frac{M_{WV,hyd}}{M_{WV,S}}$$

f_{RWE} : Factor of environment for relative wave elevation in upright condition:

$$f_{RWE} = \frac{RWE}{h_1}$$

where:

h_1 : Rule distribution of the relative wave elevation defined in [3.5] and calculated for **unrestricted navigation** as per Tab 1

$M_{WV,hyd}$: Hydrodynamic distribution of the vertical wave bending moment obtained according to [3.2.4]

$M_{WV,S}$: Rule distribution of vertical wave bending moment in sagging defined in [3.3.1]and calculated for unrestricted navigation as per Tab 1

RWE : Hydrodynamic distribution of the relative wave elevation obtained according to [3.2.4].

Table 1 : Navigation coefficient n

Navigation notation	n
unrestricted navigation	1,00
summer zone	0,90
tropical zone	0,80
coastal area	0,80
sheltered area	0,65

3.3 Hull girder wave loads

3.3.1 Vertical wave bending moment

The rule vertical wave bending moments at any hull transverse section in upright ship condition are obtained, in kN.m, from the following formulae:

- hogging conditions:

  $M_{WV,H} = 190\ F_M\ n\ C\ L^2\ B\ C_B\ 10^{-3}$

- sagging conditions:

  $M_{WV,S} = -\ 110\ F_M\ n\ C\ L^2\ B\ (C_B + 0,7)\ 10^{-3}$

where:

F_M : Distribution factor defined in Tab 2 and Fig 1.

3.3.2 Horizontal wave bending moment

The rule horizontal wave bending moment at any hull transverse section is obtained, in kN.m, from the following formula:

$M_{HW} = 0,42\ F_M\ n\ H\ L^2\ T\ C_B$

where:

F_M : Distribution factor defined in Tab 2 and Fig 1

H : Wave parameter to be taken as:

$$H = 8,13 - \left(\frac{250 - 0,7L}{125}\right)^3$$

without being taken greater than 8,13.

Table 2 : Distribution factor F_M

Hull transverse section location	Distribution factor F_M
$0 \le x < 0,4\ L$	$2,5\ \frac{x}{L}$
$0,4\ L \le x < 0,65\ L$	1
$0,65\ L \le x < L$	$2,86\left(1 - \frac{x}{L}\right)$

Figure 1 : Distribution factor F_M

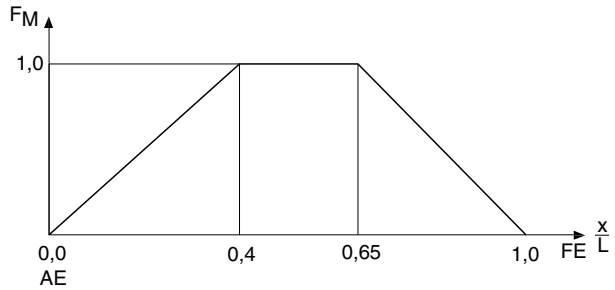

3.3.3 Vertical wave shear force

The rule vertical wave shear force at any hull transverse section is obtained, in kN, from the following formula:

$Q_{WV} = 30\ F_Q\ n\ C\ L\ B\ (C_B + 0,7)\ 10^{-2}$

where:

F_Q : Distribution factor defined in Tab 3 (see also Fig 2).

Table 3 : Distribution factor F_Q

Hull transverse section location	Distribution factor F_Q	
	Positive wave shear force	Negative wave shear force
$0 \le x < 0,2\ L$	$4,6A\frac{x}{L}$	$-4,6\frac{x}{L}$
$0,2\ L \le x \le 0,3\ L$	0,92 A	– 0,92
$0,3\ L < x < 0,4\ L$	$(9,2A - 7)\left(0,4 - \frac{x}{L}\right) + 0,7$	$-2,2\left(0,4 - \frac{x}{L}\right) - 0,7$
$0,4\ L \le x \le 0,6\ L$	0,7	– 0,7
$0,6\ L < x < 0,7\ L$	$3\left(\frac{x}{L} - 0,6\right) + 0,7$	$-(10A - 7)\left(\frac{x}{L} - 0,6\right) - 0,7$
$0,7\ L \le x \le 0,85\ L$	1	– A
$0,85\ L < x \le L$	$6,67\left(1 - \frac{x}{L}\right)$	$-6,67A\left(1 - \frac{x}{L}\right)$
Note 1: $A = \frac{190C_B}{110(C_B + 0,7)}$		

Figure 2 : Distribution factor F_Q

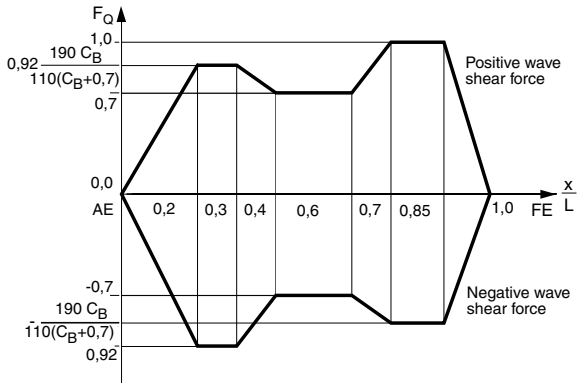

3.4 Unit absolute motions and global accelerations

3.4.1 General

Rule values of the unit absolute motions and global accelerations are to be determined according to [3.4.2] to [3.4.7] with the parameter a_B obtained from the following formulae:

- for on-site conditions:

$$a_B = n\left(\frac{2,4}{\sqrt{L}} + 3\frac{h_w}{L}\right)$$

- for transit conditions:

$$a_B = n\left(\frac{0,2V_S}{\sqrt{L}} + 3\frac{h_w}{L}\right)$$

Unit motions and global accelerations are defined, with their signs, according to the reference co-ordinate system in Ch 1, Sec 1.

Unit motions and global accelerations are assumed to be periodic. The motion amplitudes, defined by the formulae in this Article, are half of the crest to through amplitudes.

3.4.2 Surge

The rule surge acceleration a_{SU}, in m/s², is to be taken equal to 0,8n.

3.4.3 Sway

The rule sway acceleration a_{SW}, in m/s² and rule sway period T_{SW}, in s, are obtained from the formulae in Tab 4.

Table 4 : Sway period and acceleration

Period T_{SW}, in s	Acceleration a_{SW}, in m/s²
$T_{SW} = \frac{0,8\sqrt{L}}{1,22F+1}$	$a_{SW} = 0,775\ a_B\ g$
Note 1: F, froude's number to be taken equal to: • for on-site conditions: $F = 1,968/L^{0,5}$ • for transit conditions: $F = 0,164\ V_S/L^{0,5}$	

3.4.4 Heave

T_{eh} rule heave acceleration a_H, in m/s², is obtained from the following formula:

$a_H = a_B\ g$

3.4.5 Roll

The rule roll amplitude A_R, in radian, roll period T_R, in s, and roll acceleration α_R, in rad/s² are obtained from the formulae:

$A_R = a_B\sqrt{E}$ without being taken greater than 0,35

$$T_R = 2,2\frac{\delta}{\sqrt{GM}}$$

$$\alpha_R = A_R\left(\frac{2\pi}{T_R}\right)^2$$

The meaning of symbols is as follows:

$E = 1{,}39\frac{GM}{\delta^2}B$ to be taken not less than 1,0

GM : Vertical distance, in m, from the unit centre of gravity to the transverse metacentre, for the loading considered, to be taken from the loading manual or Trim and Stability Booklet. When GM is not known, the values given in Tab 5 may be accepted by the Society on a case-by-case basis

δ : Roll radius of gyration, in m, for the loading considered, to be taken from the loading manual or Trim and Stability Booklet. When δ is not known, a value of 0,35 B may be accepted by the Society on a case-by-case basis.

Table 5 : Values of GM

Service notation	Full load	Ballast
oil storage	0,12 B	heavy ballast: 0,18 B light ballast: 0,24 B
Other service notation	0,07 B	0,18 B

3.4.6 Pitch

The rule pitch amplitude A_p, in radian, pitch period T_p, in s, and pitch acceleration α_p, in rad/s², are obtained from the formulae in Tab 6.

3.4.7 Yaw

The rule yaw acceleration α_Y, in rad/s², is obtained from the following formula:

$$\alpha_Y = 1{,}581\frac{a_B g}{L}$$

Table 6 : Pitch amplitude, period and acceleration

Amplitude A_P, in rad	Period T_P, in s	Acceleration α_P, in rad/s²
$A_p = 0{,}328a_B\left(1{,}32 - \frac{h_W}{L}\right)\left(\frac{0{,}6}{C_B}\right)^{0{,}75}$	$T_p = 0{,}575\sqrt{L}$	$\alpha_p = A_p\left(\frac{2\pi}{T_p}\right)^2$
Note 1: h_W : Wave parameter, in m, equal to: • for L < 350 m: $h_W = 11{,}44 - \left\lvert\frac{L-250}{110}\right\rvert^3$ • for 350 m ≤ L ≤ 500 m: $h_W = \frac{200}{\sqrt{L}}$		

3.5 Relative wave elevation

3.5.1 Design relative wave elevation in upright condition

The design distribution of the relative wave elevation in upright condition, $h_{1,DES}$, in m, is the greatest of:

- rule distribution h_1
- hydrodynamic distribution RWE.

3.5.2 Rule relative wave elevation in upright ship condition

The rule distribution of the relative wave elevation in upright ship condition is obtained, at any hull transverse section, from the formulae in Tab 7.

Table 7 : Rule relative wave elevation in upright ship condition

Location	Reference value h_1 , in m, of relative wave elevation
x = 0	if $C_B < 0,875$ $\quad h_1 = 0,7\left(\frac{4,35}{\sqrt{C_B}} - 3,25\right)h_{1,M}$ if $C_B \geq 0,875$ $\quad h_1 = h_{1,M}$
$0 < x < 0,3\ L$	$h_{1,AE} - \frac{h_{1,AE} - h_{1,M}}{0,3}\frac{x}{L}$
$0,3\ L \leq x \leq 0,7\ L$	$0,67\ n\ C\ (C_B + 0,7)$
$0,7\ L < x < L$	$h_{1,M} + \frac{h_{1,FE} - h_{1,M}}{0,3}\left(\frac{x}{L} - 0,7\right)$
x = L	$\left(\frac{4,35}{\sqrt{C_B}} - 3,25\right)h_{1,M}$
Note 1: $h_{1,AE}$: Reference value h_1 calculated for x = 0 $h_{1,M}$: Reference value h_1 calculated for x = 0,5 L $h_{1,FE}$: Reference value h_1 calculated for x = L	

3.5.3 Design relative wave elevation in inclined ship condition

The design distribution, in m, of the relative wave elevation in inclined ship condition, at any hull transverse section, is given by:

$$h_2 = 0,5h_{1,DES} + A_{R,DES}\frac{B_W}{2}$$

where:

$h_{1,DES}$: Design distribution of relative wave elevation in upright condition

$A_{R,DES}$: Design value of roll amplitude as defined in [3.2.2]

B_W : Moulded breadth, in m, measured at the waterline at draught T_1 at the hull transverse section considered.

Note 1: As an alternative the value of h_2 directly calculated by hydrodynamic analysis may be specially considered by the Society.

3.6 Local accelerations

3.6.1 The design values of reference longitudinal, transverse and vertical accelerations at any point are obtained from the formulae given in Tab 8 for upright and inclined conditions and based on the design unit absolute motions and global accelerations.

Note 1: As an alternative the local accelerations directly calculated by hydrodynamic analysis may be specially considered by the Society, for example: offshore appurtenances and associated loads distribution at foundation.

Note 2: load cases “a“, “b“, “c” and “d” are defined in Article [4].

Table 8 : Reference values of the accelerations a_X, a_Y and a_Z , in m/s²

Direction	Upright condition	Inclined condition
X axis - Longitudinal direction	$a_{X1} = \sqrt{a_{SU}^2 + [A_P g + \alpha_p(z - T_1)]^2}$	$a_{X2} = 0$
Y axis - Transverse direction	$a_{Y1} = 0$	$a_{Y2} = \sqrt{a_{SW}^2 + [A_R g + \alpha_R(z - T_1)]^2 + \alpha_Y^2 K_X L^2}$
Z axis - Vertical direction	$a_{Z1} = \sqrt{a_H^2 + \alpha_p^2 K_X L^2}$	$a_{Z2} = \sqrt{0,25 a_H^2 + \alpha_R^2 y^2}$
Note 1: $K_X = 1,2\left(\frac{x}{L}\right)^2 - 1,1\frac{x}{L} + 0,2$ without being taken less than 0,018		

4 Load cases

4.1 Transit and site conditions

4.1.1 Load cases defined in the present Article are to be processed for both transit and on-site conditions.

4.2 General

4.2.1 Load cases for structural analyses based on partial ship models

The load cases described in this Section are those to be used for structural element analyses which do not require complete unit modelling. They are:

- the analyses of plating (see Ch 1, Sec 7)
- the analyses of ordinary stiffeners (see Ch 1, Sec 8)
- the analyses of primary supporting members analysed through three dimensional structural models (see Ch 1, Sec 9)
- the fatigue analysis of the structural details of the above elements (see Ch 1, Sec 10).

These load cases are the mutually exclusive load cases “a”, “b”, “c” and “d” described in [4.3] and [4.4].

Load cases “a” and “b” refer to the ship in upright conditions, i.e. at rest or having surge, heave and pitch motions.

Load cases “c” and “d” refer to the ship in inclined conditions, i.e. having sway, roll and yaw motions.

4.3 Upright ship conditions (load cases “a” and “b”)

4.3.1 Ship condition

The unit is considered to encounter a wave which produces (see Fig 3 “a” and Fig 4 for load case “b”) a relative motion of the sea waterline (both positive and negative) symmetric on the unit sides and induces wave vertical bending moment and shear force in the hull girder. In load case “b”, the wave is also considered to induce heave and pitch motions.

Figure 3 : Wave loads in load case a_1

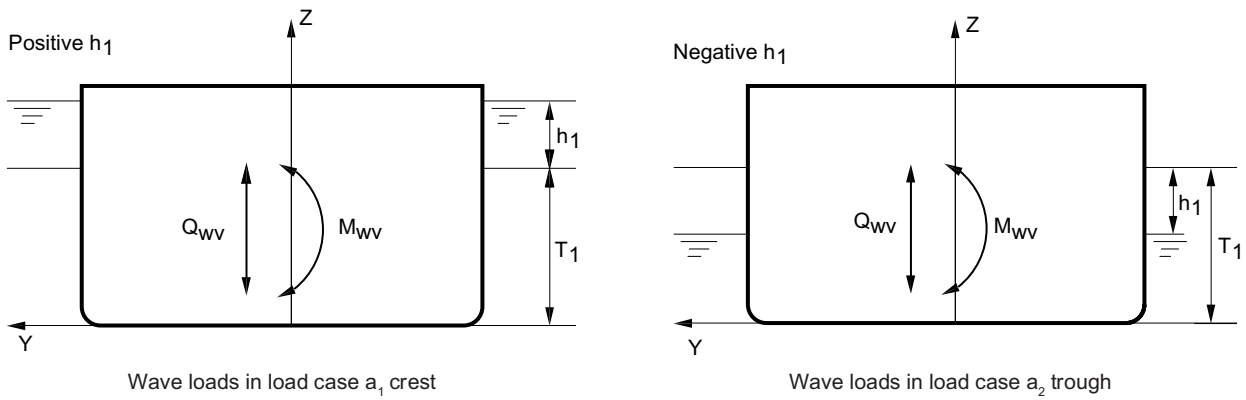

Figure 4 : Wave loads in load case b

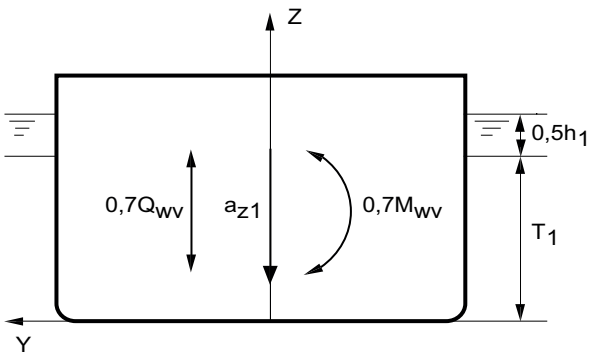

4.3.2 Local loads

The external pressure is obtained by adding to or subtracting from the still water head a wave head corresponding to the relative motion.

The internal loads are the still water loads induced by the weights carried, including those carried on decks. For load case “b”, those induced by the accelerations are also to be taken into account.

4.3.3 Hull girder loads

The hull girder loads are:

- the vertical still water bending moment and shear force
- the vertical wave bending moment and the shear force.

4.4 Inclined ship conditions (load cases “c” and “d”)

4.4.1 Ship condition

The unit is considered to encounter a wave which produces (see Fig 5 for load case “c” and Fig 6 for load case “d”):

- sway, roll and yaw motions
- a relative motion of the sea waterline anti-symmetric on the ship sides

and induces:

- vertical wave bending moment and shear force in the hull girder
- horizontal wave bending moment in the hull girder.

4.4.2 Local loads

The external pressure is obtained by adding or subtracting from the still water head a wave head linearly variable from positive values on one side of the ship to negative values on the other.

The internal loads are the still water loads induced by the weights carried, including those carried on decks, and the wave loads induced by the accelerations.

Figure 5 : Wave loads in load case c +

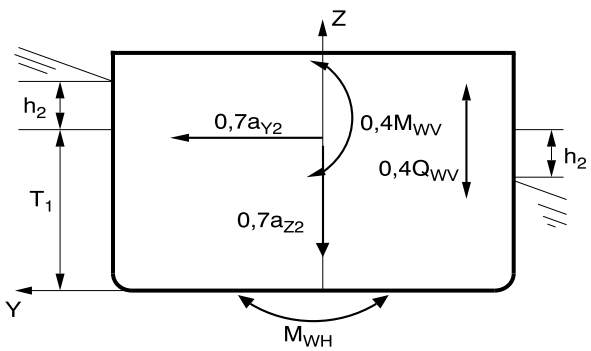

Figure 6 : Wave loads in load case d +

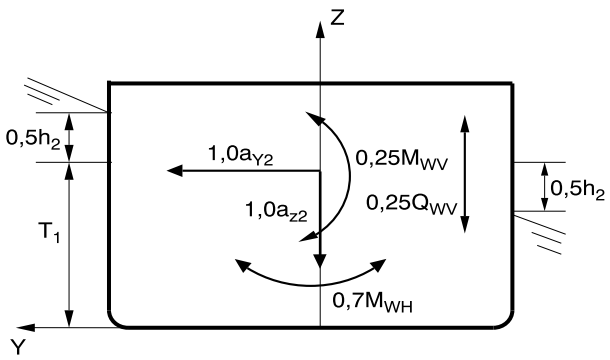

Table 9 : Wave local loads in each load case

Unit condition	Load case	Relative wave elevations		Reference accelerations a_X, a_Y, a_Z	
		Reference value	Combination factor	Reference value	Combination factor
Upright	a	$h_{1,DES}$	1,0	no acceleration taken into account for case "a"	
	b **(1) (2)**		0,5	a_{X1}; 0; a_{Z1}	1,0
Inclined	c + **(3)**	h_2	1,0	0; a_{Y2}; a_{Z2}	C_{FA} = 0,7
	c – **(4)**				
	d + **(3)**		0,5	0; a_{Y2}; a_{Z2}	C_{FA} = 1,0
	d – **(4)**				

(1) For a surface unit moving with a positive heave motion:
- $h_{1,DES}$ is positive
- the reference acceleration a_{X1} is towards the direction which maximise the
- the reference acceleration a_{Z1} is directed towards the negative part of the Z axis.

(2) For plating and ordinary stiffeners, refer to [1.3.7]

(3) For surface unit rolling with a negative roll angle (portside down):
- h_2 is positive for the points located in the positive part of the Y axis and is negative for the points located in the negative part of the Y axis
- the reference acceleration a_{Y2} is directed towards the positive part of the Y axis
- the reference acceleration a_{Z2} is directed towards the negative part of the Z axis for the points located in the positive part of the Y axis and is directed towards the positive part of the Z axis for the points located in the negative part of the Y axis.

(4) For surface unit rolling with a positive roll angle (portside up)

Note 1: Reference accelerations a_{X1} and a_{Z1} are to be combined in each direction when assessing the foundations of equipment and appurtenances.

Note 2: Other combinations may be required by the Society on a case by case basis.

4.4.3 Hull girder loads

The hull girder loads are:

- the still water bending moment and shear force
- the vertical wave bending moment and shear force
- the horizontal wave bending moment.

4.5 Summary of load cases

4.5.1 The wave local and hull girder loads to be considered in each load case are summarized in Tab 10 and Tab 11, respectively.

These loads are obtained by multiplying, for each load case, the reference value of each wave load by the relevant combination factor.

Table 10 : Wave hull girder loads in each load case

Unit condition	Load case	Vertical bending moment		Vertical shear force		Horizontal bending moment	
		Reference value	Combination factor	Reference value	Combination factor	Reference value	Combination factor
Upright	a_1 crest	M_{WV}	1,0	Q_{WV}	1,0	M_{WH}	0,0
	a_2 trough						
	b		0,7		0,7		
Inclined	c	M_{WV}	0,4	Q_{WV}	0,4	M_{WH}	1,0
	d		0,25		0,25		0,7

Note 1: The sign of the hull girder loads, to be considered in association with the wave local loads for the scantling of plating, ordinary stiffeners and primary supporting members contributing to the hull girder longitudinal strength, is defined in Ch 1, Sec 7, Ch 1, Sec 8 and Ch 1, Sec 9

Note 2: The combination factors used for direct calculations are given in Ch 1, Sec 9.

5 Sea pressures

5.1 Transit and site conditions

5.1.1 Sea pressures defined in the present Article are to be processed for both transit and on-site conditions. For this purpose, two distinct sets of sea pressures are to be calculated.

5.2 General

5.2.1 The sea pressures to be taken into account are those given in the present Article [5].

However the Society may accept calculations based on pressures coming directly from hydrodynamic calculation, if duly justified.

5.3 Still water pressure

5.3.1 Pressure on side and bottom

The still water pressure at any point of the hull is obtained from the formulae in Tab 11 (see also Fig 7).

Table 11 : Still water pressure

Location		Still water pressure p_S, in kN/m²
Points at and below the waterline	$(z \le T_1)$	$\rho\, g\, (T_1 - z)$
Points above the waterline	$(z > T_1)$	0

Figure 7 : Still water pressure

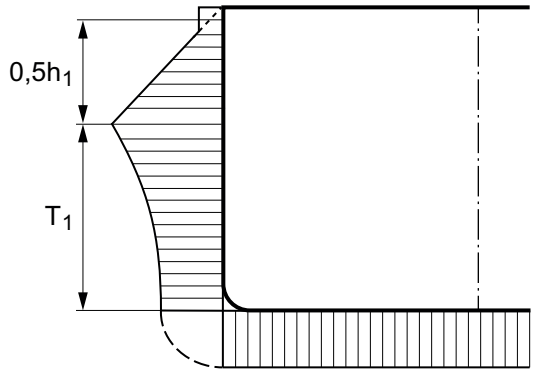

5.3.2 Pressure on exposed deck

The still water pressure on exposed decks is to be taken equal to $10\varphi_1\, \varphi_1$, where φ_1 is defined in Tab 12 and φ_2 in Tab 13.

Table 12 : Coefficient for pressure on exposed decks

Exposed deck location	φ_1
Freebord deck and below	1,00
Top of lowest tier	0,75
Top of second tier	0,56
Top of third tier	0,42
Top of fourth tier	0,32
Top of fifth tier	0,25
Top of sixth tier	0,20
Top of seventh tier	0,15
Top of eighth tier and above	0,10

5.4 Wave pressure in upright ship conditions

5.4.1 Pressure on sides and bottom

The wave pressure in upright ship conditions at any point of the hull is obtained from the formulae given in Tab 13. See also Fig 8, Fig 9 and Fig 10.

Table 13 : Wave pressure on sides and bottom in upright ship conditions (load cases “a” and “b”)

Location	Wave pressure p_W, in kN/m²	
	Crest	Trough
Bottom and sides below the waterline ($z \le T_1$)	$\frac{\rho g C_{F1} h_{1,DES}}{2}\left(\frac{z+T_1}{T_1}\right)$	$-\frac{\rho g C_{F1} h_{1,DES}}{2}\left(\frac{z+T_1}{T_1}\right)$ without being taken less than $\rho g (z - T_1)$
Sides above the waterline ($z > T_1$)	$\rho g (T_1 + C_{F1} h_{1,DES} - z)$ without being taken, for case “a” only, less than $0{,}15\varphi_1\varphi_2 L$	0,0

Note 1:

C_{F1} : Combination factor, to be taken equal to:
- for load case “a”: $C_{F1} = 1{,}0$
- for load case “b”: $C_{F1} = 0{,}5$

φ_1 : Coefficients defined in Tab 12

φ_2 : Coefficients taken equal to:
- if $L \ge 120$ m: $\varphi_2 = 1$
- if $L < 120$ m: $\varphi_2 = L/120$

Figure 8 : Wave pressure in upright ship conditions (load case a_1 crest)

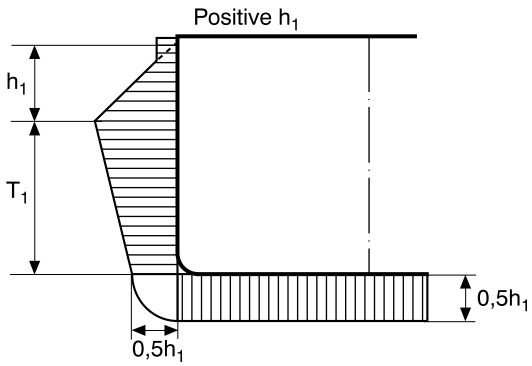

Figure 9 : Wave pressure in upright ship conditions (load case a_2 trough)

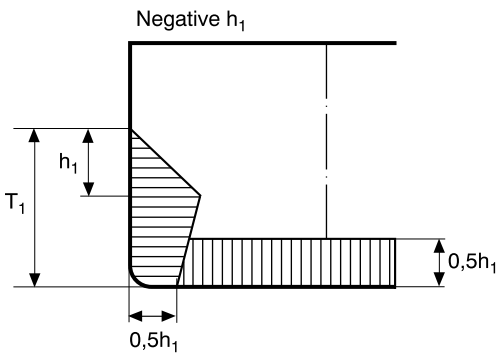

Figure 10 : Wave pressure in upright ship conditions (load case b)

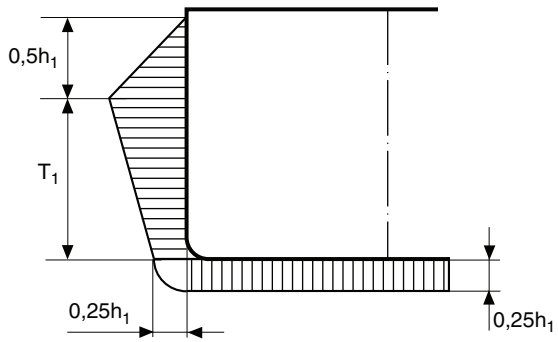

5.4.2 Pressure on exposed decks

The wave pressure on exposed decks is to be considered for load cases “a crest” and “b crest” only. The distribution is obtained from the formulae given in Tab 14.

Table 14 : Wave pressure on exposed decks in upright ship conditions (load cases “a” and “b”)

Location	Wave pressure p_W, in kN/m²	
	Crest	Trough
$0 \le x \le 0,5\ L$	$28 f_{RWE} \varphi_1 \varphi_2$	0
$0,5\ L < x < 0,75\ L$	$\left\{28 + \left[\frac{31,3\sqrt{H_F} - 28}{0,25}\right]\left(\frac{x}{L} - 0,5\right)\right\} f_{RWE} \varphi_1 \varphi_2$	0
$0,75\ L \le x \le L$	$31,3 f_{RWE} \varphi_1 \varphi_2 \sqrt{H}$	0

Note 1:

$$H = C_{F1}\left[2,66\left(\frac{x}{L} - 0,7\right)^2 + 0,14\right]\sqrt{\frac{VL}{C_B}} - (z - T_1)$$ without being taken less than 0,8

C_{F1} : Combination factor, to be taken equal to:
- for load case “a”: $C_{F1} = 1,0$
- for load case “b”: $C_{F1} = 0,5$

f_{RWE} : Factor of environment for relative wave elevation in upright condition, as defined in [3.2.8]

H_F : Value of H calculated at x = 0,75 L

V : To be taken as:
- for on-site conditions, V = 13
- for transit conditions, V is to be taken equal to V_s, but not less than 13 knots

φ_1 : Coefficient defined in Tab 12

φ_2 : Coefficient defined in Tab 13

5.5 Wave pressure in inclined ship conditions

5.5.1 Pressure on side and bottom

The wave pressure in inclined ship conditions at any point of the hull is obtained from the formulae in Tab 15. See also Fig 11 and Fig 12.

5.5.2 Pressure on exposed decks

The wave pressure on exposed decks is to be considered for load cases “a crest” and “b crest” only (see [5.4.2]).

Table 15 : Wave pressure in inclined ship conditions (load cases “c” and “d”)

Location	Wave pressure p_W, in kN/m² (negative roll angle)	
	$y \ge 0$	$y < 0$
Bottom and sides below the waterline ($z \le T_1$)	$\rho g C_{F2} h_2 \frac{y}{B_W}\left[\frac{z + T_1}{T_1}\right]$	$\rho g C_{F2} h_2 \frac{y}{B_W}\left[\frac{z + T_1}{T_1}\right]$ without being taken less than $\rho\ g\ (z - T_1)$
Sides above the waterline ($z > T_1$)	$\rho g\left[T_1 + 2\frac{y}{B_W} C_{F2} h_2 - z\right]$ without being taken, for case “c” only, less than $0,15\ \varphi_1 \varphi_2 L$	0

Note 1:

B_W : Moulded breadth, in m, measured at the waterline at draught T_1, at the hull transverse section considered

C_{F2} : Combination factor, to be taken equal to:
- for load case “c”: $C_{F2} = 1,0$
- for load case “d”: $C_{F2} = 0,5$

h_2 : Relative wave elevation in inclined unit condition, in m, as defined in [3.5.3].

Figure 11 : Wave pressure in inclined ship conditions (load case c+)

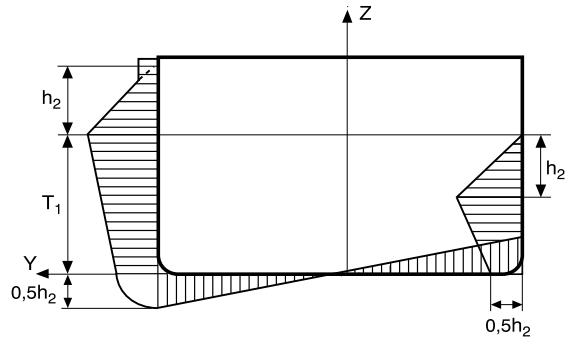

Figure 12 : Wave pressure in inclined ship conditions (load case d+)

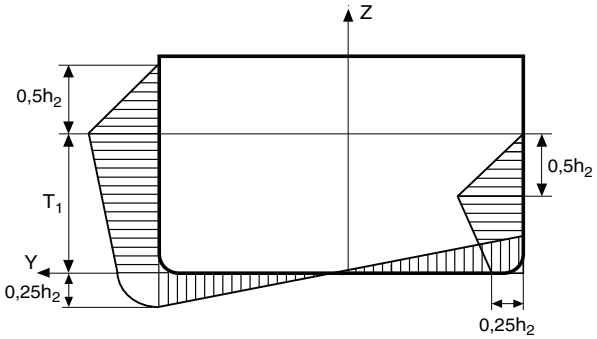

6 Internal pressures

6.1 Transit and site conditions

6.1.1 Internal pressures defined in the present Article are to be processed for both transit and on-site conditions. For this purpose, two distinct sets of internal pressures are to be calculated.

6.2 Definitions

6.2.1 Cargo

The cargo mass density to be considered is the one indicated on the midship section drawing or in the loading manual.

In the absence of more precise values, a cargo mass density of 0,9 t/m³ is to be considered for calculating the internal pressures.

In case of filling the oil capacities by sea water for transit between yard and site, the density is to be 1,025 t/m³.

6.2.2 Sea water

A sea water mass density of 1,025 t/m³ is to be considered.

6.2.3 Total acceleration vector

The total acceleration vector A_T is the vector whose absolute values of X, Y and Z components are the longitudinal, transverse and vertical accelerations defined in Tab 16.

In inclined ship conditions:

$$\vec{A_T} = a_{TY2}\vec{Y} + a_{TZ2}\vec{Z}$$

where:

Y, Z : Normed vectors as defined in Fig 13

a_{TY2} , a_{TZ2} : Total accelerations for inclined ship conditions defined in Tab 16.

6.2.4 Highest point H of the tank in the direction of the total acceleration vector A_T

The highest point H of the tank in the direction of the total acceleration vector A_T, defined in [6.2.3], is the point of the tank boundary whose projection on the direction forming the angle Φ with the vertical direction is located at the greatest distance from the tank's centre of gravity. It is to be determined for the inclined ship conditions, as indicated in Fig 13, where cog is the tank's centre of gravity.

Table 16 : Total accelerations a_{TX}, a_{TY} and a_{TZ}

Direction	Upright condition	Inclined condition
X axis - Longitudinal direction	$a_{TX1} = a_{X1}$	$a_{TX2} = a_{X2}$
Y axis - Transverse	$a_{TY1} = a_{Y1}$	$a_{TY2} = 0{,}7 C_{FA} a_{Y2}$
Z axis - Vertical	$a_{TZ1} = -a_{Z1} - g$	$a_{TZ2} = -0{,}7 C_{FA} a_{Z2} - g$
Note 1: C_{FA} : Combination factor given in Tab 9.		

Figure 13 : Inclined ship conditions - Point H

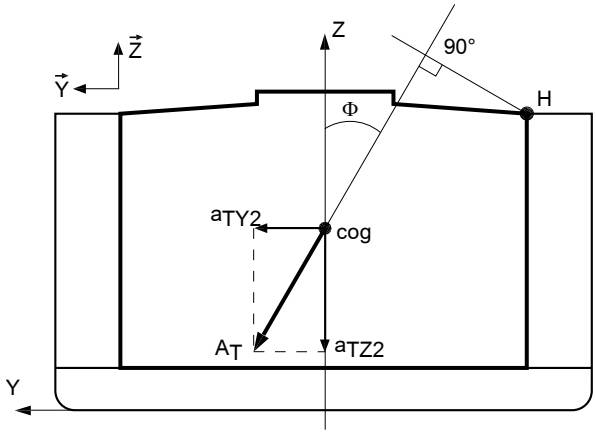

6.3 Internal pressures and forces

6.3.1 Internal still water pressure

The still water pressure p_S , in kN/m² to be used in combination with the inertial pressure in [6.3.2] is the greater of the values obtained, from the following formulae: Φϕφ

$p_S = \rho_L\, g\, (z_L - z)$

$p_S = \rho_L\, g\, (z_{TOP} - z) + 100\, p_{PV}$

In no case is it to be taken, in kN/m², less than:

$$p_S = \rho_L g \left(\frac{0,8 L_1}{420 - L_1} \right)$$

where:

L_1 : L, but to be taken not greater than 200 m

p_{PV} : Setting pressure, in bar, of safety valves

z_L : Z co-ordinate, in m, of the highest point of the liquid:

$z_L = z_{TOP} + 0{,}5\, (z_{AP} - z_{TOP})$

z_{AP} : Z co-ordinate, in m, of the top of the air pipes, to be taken not less than z_{TOP}.

Note 1: Specific overflow systems leading to higher internal pressure are to be considered on case-by-case basis.

6.3.2 Internal inertial pressure

The inertial pressure is obtained from the formulae in Tab 17.

For typical tank arrangements, the inertial pressure transmitted to the hull structures at the calculation point P in inclined ship condition may be obtained from the formulae in Tab 18, obtained by applying to those tanks the general formula in Tab 18.

In addition, the inertial pressure p_W is to be taken such that:

$p_S + p_W \geq 0$

where p_S is defined in [6.3.1].

6.3.3 Pressure for swash bulkheads

The still water and inertial pressures transmitted to the swash bulkhead structures are obtained, in kN/m², as specified in Tab 20.

Table 17 : Watertight bulkheads of liquid compartments - Inertial pressure

Ship condition	Load case	Inertial pressure p_W, in kN/m²
Upright	"a"	No inertial pressure
	"b"	$\rho_L[0,5a_{X1}\ell_B + a_{Z1}(z - z_{TOP}) + g(z - z_{TOP})]$
Inclined	"c"	$\rho_L[a_{TY2}(y - y_H) + a_{TZ2}(z - z_H) + g(z - z_{TOP})]$
	"d"	

Note 1:

ℓ_B : Longitudinal distance, in m, between the transverse tank boundaries, without taking into account small recesses in the lower part of the tank (see Fig 14)

y_H, z_H : Y and Z co-ordinates, in m, of the highest point of the tank in the direction of the total acceleration vector, defined in [6.2.3] for load case "c" and load case "d".

Figure 14 : Upright ship conditions - Distance ℓ_B

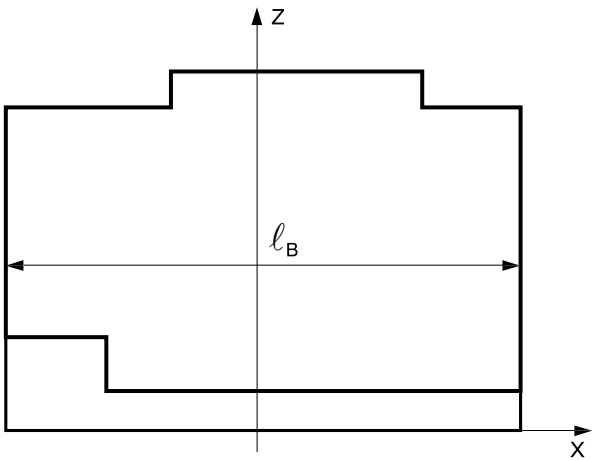

Table 18 : Liquid cargo and ballast - Inertial pressure for typical tank arrangements

Ship condition	Load case	Inertial pressure p_w, in kN/m²
Inclined (negative roll angle)	"c"	$p_w = 0,7\ C_{FA}\rho_L(a_{Y2}b_L + a_{Z2}d_H)$
	"d"	

Note 1:

C_{FA} : Combination factor taken equal to:
- C_{FA} = 0,7 for load case "c"
- C_{FA} = 1,0 for load case "d"

ρ_L : Density of the liquid cargo, in t/m³

a_{Y2}, a_{Z2} : Reference value of the acceleration in the inclined ship, defined in [3.6.1], calculated in way of the centre of gravity of the tank

b_L, d_H : Tranverse and vertical distances, in m, to be taken as indicated in Tab 20 for various type of tanks.

6.4 Partly filled tanks

6.4.1 General

All capacities are to be checked for several relevant partial filling levels.

6.4.2 Risk of resonance

The risk of resonance is to be evaluated according to Pt B, Ch 11, Sec 4, [1.5] of the Ship Rules.

The values of the pitch period and of the roll period may be taken from the hydrodynamic calculation.

6.4.3 Impact pressure

If there is a risk of resonance, the scantlings are to be verified taking into account pressure given in Pt B, Ch 5, Sec 6, [2] of the Ship Rules.

When hydrodynamic values of unit motions and accelerations are greater than rule values for unrestricted navigation, the impact pressure verification is to be specially considered.

Table 19 : Transverse et vertical distances b_L and D_H for various type of tanks

Type 1

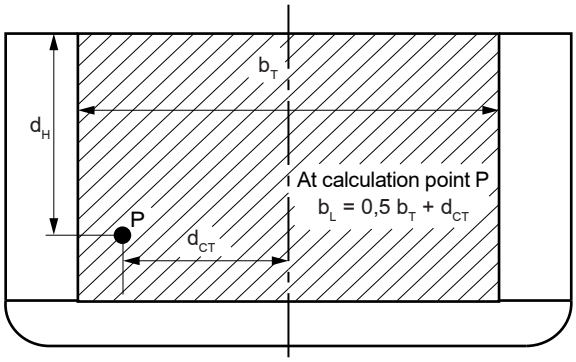

Type 2

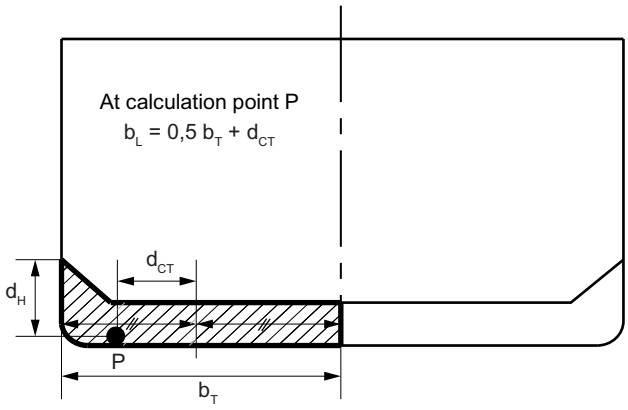

Type 3

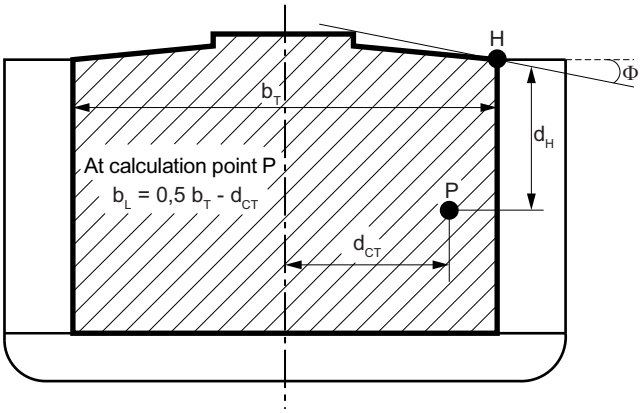

Type 4

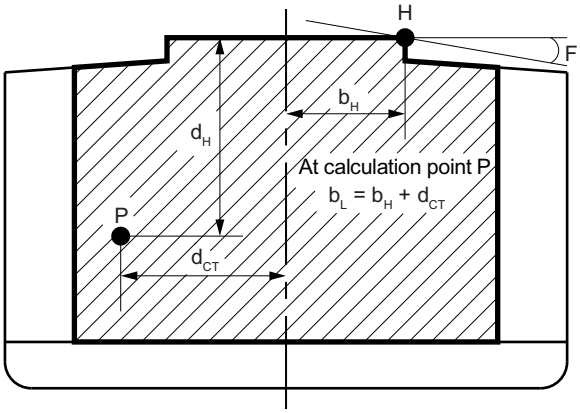

Type 5

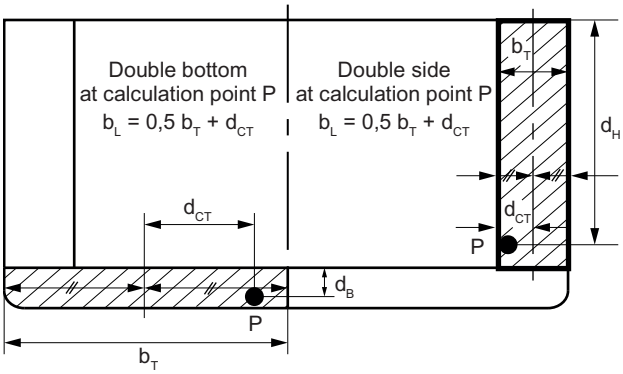

Type 6

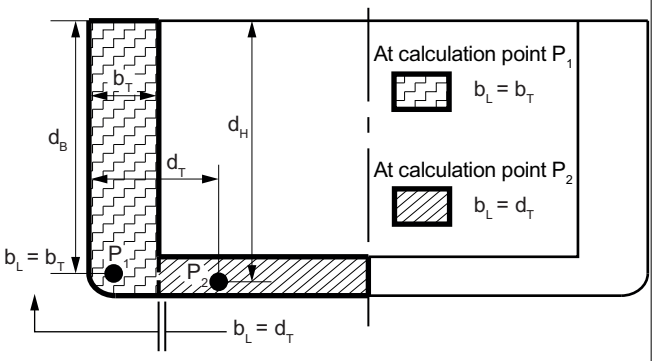

Note 1: For type 1, type 2 type 3 and type 4, where the central cargo is divided into two or more tanks by longitudinal bulkhead, b_L and d_H for calculation points inside each tank are to be taken as indicated in type 5 for the double side.

Note 2: The angle Φ as defined in Fig 13

Table 20 : Swash bulkheads in liquid compartment - Still water and inertial pressure

	Still water pressure p_S in kN/m²	Inertial pressure p_W, in kN/m²
Swash transverse bulkhead	$p_S = 2{,}2\ \rho_L \ell_C (1-\alpha) A_P$ without being less than 0,4 g d_0	$p_W = 2{,}2\ \rho_L \ell_C (1-\alpha) A_P$ without being less than 0,4 g d_0
Swash longitudinal bulkhead	$p_S = 2{,}2\ \rho_L b_C (1-\alpha) \sin A_R$ without being less than 0,4 g d_0	$p_W = 2{,}2\ \rho_L b_C (1-\alpha) \sin A_R$ without being less than 0,4 g d_0

Note 1:

b_c : Transverse distance, in m, between longitudinal watertight bulkheads or longitudinal wash bulkheads, if any, or between a longitudinal watertight bulkhead and the adjacent longitudinal wash bulkhead

ℓ_c : Longitudinal distance, in m, between transverse watertight bulkheads or transverse wash bulkheads, if any, or between a transverse watertight bulkhead and the adjacent transverse wash bulkhead

d_0 : Distance, in m, to be taken equal to:
- for 65 m ≤ L < 120 m: $d_0 = 0{,}02L$
- for L ≥ 120 m: $d_0 = 2{,}4$

α : Ratio of the lightening hole area to the bulkhead area, not taken greater than 0,3

ρ_L : Density, in t/m³, of the liquid carried.

6.5 Accommodation

6.5.1 Design pressure

The scantlings of the accommodation decks are calculated using a conventional still water and inertial pressure as defined in [6.5.2].

6.5.2 Still water and inertial pressures

The inertial pressures transmitted to the deck structures are obtained, in kN/m², as specified in Tab 21.

The values of p_S depending on the type of the accommodation compartment are given in Tab 22.

Table 21 : Accommodation Still water and inertial pressures

Ship condition	Load case	Still water pressure p_S and inertial pressure p_W, in kN/m²
Upright (positive heave motion)	"a"	No inertial pressure
	"b"	$p_W = p_S \frac{a_{Z1} + g}{g}$
Inclined	"c"	The inertial pressure transmitted to the deck structures in inclined condition may generally be disregarded. Specific cases in which this simplification is not deemed permissible by the Society are considered individually.
	"d"	

Table 22 : Minimum still water deck pressure in accommodation compartments

Type of accommodation compartment	p_s, in kN/m$_2$
Large public spaces, such as: restaurants, halls, cinemas, lougnes	5,0
Large rooms, such as: • rooms with fixed furniture • games and hobbies rooms, hospitals	3,0
Cabins	3,0
Other compartments	2,5

6.6 Flooding

6.6.1 Still water and inertial pressures

Unless otherwise specified, the still water and inertial pressures to be considered as acting on platings (excluding bottom and side shell platings) which constitute boundaries of compartments not intended to carry liquids, but considered flooded for damaged stability verification, are obtained, in kN/m², from the formulae in Tab 23.

Table 23 : Flooding still water pressure and inertial pressures

Still water pressure p_{SF}, in kN/m²	Inertial pressure p_{WF}, in kN/m²
$p_{SF} = \rho g(z_F - z)$ without being taken less than 0,4 g d_0	$p_{WF} = 0,6\rho(a_{Z1} + g)(z_F - z)$ without being taken less than 0,4 g d_0
Note 1: z_F : Z co-ordinate, in m, of the freeboard deck at side in way of the transverse section considered. Where the results of damage stability calculations are available, the deepest equilibrium waterline may be considered in lieu of the freeboard deck; in this case, the Society may require transient conditions to be taken into account.	

6.7 Testing

6.7.1 Still water pressures

The still water pressure to be considered as acting on plates and stiffeners subject to tank testing is to be obtained from Tab 24.

6.7.2 Inertial pressures

No inertial pressure is to be considered as acting on plates and stiffeners subject to tank testing.

Table 24 : Testing - Still water pressures

Compartment or structure to be tested	Still water pressure p_{ST}, in kN/m²
Double bottom tanks	The greater of the following: $p_{ST} = 10\ [(z_{TOP} - z) + d_{AP}]$ $p_{ST} = 10\ [(z_{TOP} - z) + 2,4]$ $p_{ST} = 10\ [(z_{TOP} - z)$
Double side tanks	The greater of the following: $p_{ST} = 10\ [(z_{TOP} - z) + d_{AP}]$ $p_{ST} = 10\ [(z_{TOP} - z) + 2,4]$ $p_{ST} = 10\ [(z_{TOP} - z)$
Deep tanks other than those listed elsewhere in this Table	The greater of the following: $p_{ST} = 10\ [(z_{TOP} - z) + d_{AP}]$ $p_{ST} = 10\ [(z_{TOP} - z) + 2,4])$
Cargo oil tanks	The greater of the following: $p_{ST} = 10\ [(z_{TOP} - z) + d_{AP}]$ $p_{ST} = 10\ [(z_{TOP} - z) + 2,4]$ $p_{ST} = 10\ [(z_{TOP} - z) + 10]$
Peak tanks	The greater of the following: $p_{ST} = 10\ [(z_{TOP} - z) + d_{AP}]$ $p_{ST} = 10\ [(z_{TOP} - z) + 2,4])$
Chain locker	$p_{ST} = 10\ [(z_{CP} - z)$ where: z_{CP} : Z co-ordinate, in m, of the top of chain pipe
Ballast ducts	The greater of the following: $p_{ST} = 10\ [(z_{TOP} - z) + 10\ p_{PV}]$ Ballast pump maximum pressure
Fuel oil tanks	The greater of the following: $p_{ST} = 10\ [(z_{TOP} - z) + d_{AP}]$ $p_{ST} = 10\ [(z_{TOP} - z) + 2,4])$ $p_{ST} = 10\ [(z_{TOP} - z) + 10\ p_{PV}]$ $p_{ST} = 10\ [(z_{BD} - z)$
Note 1: d_{AP} : Distance from the top of air pipe to the top of compartment, in m p_{pv} : As defined in [6.3.1] z_{BD} : Z co-ordinate, in m, of the bulkhead deck.	

Section 6 Hull Girder Strength

Symbols

E : Young's modulus, in N/mm², as defined in Ch 1, Sec 3

g : Gravity acceleration, in m/s², taken equal to 9,81

k : Material factor as defined in Pt B, Ch 4, Sec 1, [2.2] of the Ships Rules

I_Y : Moment of inertia, in m⁴, of the hull transverse section about its horizontal neutral axis, to be calculated according to [2.4]

I_Z : Moment of inertia, in m4, of the hull transverse section about its vertical neutral axis, to be calculated according to [2.4]

M_{SW} : Still water bending moment, in KN.m, as defined in Ch 1, Sec 5, [2.2.2]

M_{WV} : Vertical wave bending moment, in KN.m, as defined in Ch 1, Sec 5, [2.2.3]

Q_{SW} : Still water shear force, in KN.m, as defined in Ch 1, Sec 5, [2.3]

Q_{WV} : Vertical wave shear force, in kN.m, as defined in Ch 1, Sec 5, [3.3]:

- Q_{WV} is the positive wave shear force if $Q_{SW} \geq 0$
- Q_{WV} is the negative wave shear force if $Q_{SW} < 0$

S : First moment, in m³, of the hull transverse section, to be calculated according to [2.5].

1 General

1.1 Principle

1.1.1 The hull girder strength is to be evaluated independently for the transit phases covered by classification and on-site conditions.

1.1.2 The hull girder is to be designed to allow flexibility in cargo loading (see Ch 1, Sec 4).

1.2 Strength characteristics of the hull girder transverse sections

1.2.1 The requirements for calculating the hull girder strength characteristics to be used for the checks in Articles [3] and [4], in association with the hull girder loads specified in Ch 1, Sec 5, [2.2] and Ch 1, Sec 5, [3.3]are specified in Article [2].

2 Calculation of the strength characteristics of hull girder transverse sections

2.1 Hull girder transverse sections

2.1.1 General

Hull girder transverse sections are to be considered as being constituted by the members contributing to the hull girder longitudinal strength, i.e. all continuous longitudinal members below the strength deck defined in [2.2], taking into account the requirements in [2.1.2] to [2.1.6].

These members are to be considered as having:

- gross scantlings, when the hull girder strength characteristics to be calculated are used for the yielding checks in Article [3]
- net scantlings, when the hull girder strength characteristics to be calculated are used for the ultimate strength checks in Article [4] and for calculating the hull girder stresses for the strength checks of plating, ordinary stiffeners and primary supporting members in Ch 1, Sec 7; Ch 1, Sec 8 and Ch 1, Sec 9.

2.1.2 Members in materials other than steel

Where a member contributing to the longitudinal strength is made in material other than steel with a Young's modulus E equal to 2,06 10⁵ N/mm², the steel equivalent sectional area that may be included in the hull girder transverse sections is obtained, in m², from the following formula:

$$A_{SE} = \frac{E}{2{,}06{,}10^5} A_M$$

where:

A_M : Sectional area, in m², of the member under consideration.

2.1.3 Large openings

Large openings are:

- elliptical openings exceeding 2,5 m in length or 1,2 m in breadth
- circular openings exceeding 0,9 m in diameter.

Large openings and scallops, where scallop welding is applied, are always to be deducted from the sectional areas included in the hull girder transverse sections.

2.1.4 Small openings

Smaller openings than those in [2.1.3] in one transverse section in the strength deck or bottom area need not be deducted from the sectional areas included in the hull girder transverse sections, provided that:

$\Sigma b_S \leq 0{,}06\ (B - \Sigma b)$

where:

Σb_S : Total breadth of small openings, in m, in the strength deck or bottom area at the transverse section considered, determined as indicated in Fig 1

Σb : Total breadth of large openings, in m, at the transverse section considered, determined as indicated in Fig 1.

Where the total breadth of small openings Σb_S does not fulfil the above criteria, only the excess of breadth is to be deducted from the sectional areas included in the hull girder transverse sections.

Additionally, individual small openings which do not comply with the arrangement requirements given in Ch 1, Sec 3, [11.7.2], are to be deducted from the sectional areas included in the hull girder transverse sections.

2.1.5 Lightening holes, draining holes and single scallops

Lightening holes, draining holes and single scallops in longitudinals need not be deducted if their height is less than 0,25 h_W, without being greater than 75 mm, where h_W is the web height, in mm.

Otherwise, the excess is to be deducted from the sectional area or compensated.

2.1.6 Bilge keels

Bilge keels may not be included in the hull girder transverse sections, as they are considered not contributing to the hull girder sectional area.

Figure 1 : Calculation of Σb and Σb_S

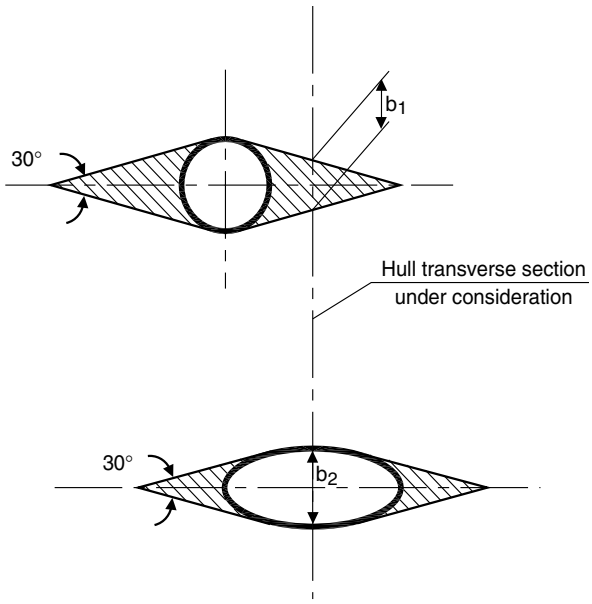

b_1 and b_2 included in Σb and Σb_S

2.2 Strength deck

2.2.1 The strength deck is, in general, the uppermost continuous deck.

In the case of a superstructure or deckhouses contributing to the longitudinal strength, the strength deck is the deck of the superstructure or the deck of the uppermost deckhouse.

2.2.2 A superstructure extending at least 0,15 L within 0,4 L amidships may generally be considered as contributing to the longitudinal strength. For other superstructures and for deckhouses, their contribution to the longitudinal strength is to be assessed on a case by case basis, through a finite element analysis of the whole ship, which takes into account the general arrangement of the longitudinal elements (side, decks, bulkheads).

2.3 Section modulus

2.3.1 The section modulus at any point of a hull transverse section is obtained, in m³, from the following formula:

$$Z_A = \frac{I_Y}{|z - N|}$$

where:

I_Y : Moment of inertia, in m⁴, defined in [2.4]

z : Z co-ordinate, in m, of the calculation point with respect to the reference co-ordinate system defined in Ch 1, Sec 1, [3.3]

N : Z co-ordinate, in m, of the centre of gravity of the hull transverse section defined in [2.1], with respect to the reference co-ordinate system defined in Ch 1, Sec 1, [3.3].

2.3.2 The section moduli at bottom and at deck are obtained, in m³, from the following formulae:

- at bottom:

$$Z_{AB} = \frac{I_Y}{N}$$

- at deck:

$$Z_{AB} = \frac{I_Y}{V_D}$$

where:

I_Y : Defined in [2.4]

N : Defined in [2.3.1]

V_D : Vertical distance, in m: $V_D = z_D - N$

z_D : Z co-ordinate, in m, of strength deck, defined in [2.2], with respect to the reference co-ordinate system defined in Ch 1, Sec 1, [3.3].

2.4 Moments of inertia

2.4.1 The moments of inertia I_Y and I_Z, in m⁴, are those, calculated about the horizontal and vertical neutral axes, respectively, of the hull transverse sections defined in [2.1].

2.5 First moment

2.5.1 The first moment S, in m³, at a level z above the baseline is that, calculated with respect to the horizontal neutral axis, of the portion of the hull transverse sections defined in [2.1] located above the z level.

2.6 Structural models for the calculation of shear stresses

2.6.1 The structural models that can be used for the calculation of shear stresses, induced by shear forces, are:

- three dimensional finite element models
- thin walled beam models

representing the members which constitute the hull girder transverse sections according to [2.1].

3 Yielding checks

3.1 Hull girder stresses

3.1.1 Normal stresses induced by vertical bending moments

The normal stresses induced by vertical bending moments are obtained, in N/mm², from the following formulae:

- at any point of the hull transverse section:

$$\sigma_1 = \frac{M_{SW} + M_{WV}}{Z_A} 10^3$$

- at bottom:

$$\sigma_1 = \frac{M_{SW} + M_{WV}}{Z_{AB}} 10^3$$

- at deck:

$$\sigma_1 = \frac{M_{SW} + M_{WV}}{Z_{AD}} 10^3$$

where:

Z_A : Gross section modulus, in cm³, at any point of the hull transverse section, to be calculated according to [2.3.1]

Z_{AB}, Z_{AD} : Gross section moduli, in cm³, at bottom and deck, respectively, to be calculated according to [2.3.2].

3.1.2 The normal stresses in a member made in material other than steel with a Young's modulus E equal to 2,06 x 10⁵ N/mm², included in the hull girder transverse sections as specified in [2.1.2], are obtained from the following formula:

$$\sigma_1 = \frac{E}{2{,}06 \cdot 10^5}\sigma_{1S}$$

where:

σ_{1S} : Normal stress, in N/mm², in the member under consideration, calculated according to [3.1.1] considering this member as having the steel equivalent sectional area A_{SE} defined in [2.1.2].

3.1.3 Shear stress

a) The shear stresses induced by shear forces and torque are obtained through direct calculation analyses based on a structural model in accordance with [2.6.1].

The shear force corrections ΔQ_C and ΔQ are to be taken into account, in accordance with [3.1.4] and [3.1.5], respectively.

b) The vertical shear forces to be considered in these analyses are the vertical shear forces Q_{SW} and Q_{WV}, taking into account the combination factors defined in Ch 1, Sec 5, Tab 10.

When deemed necessary by the Society on the basis of the ship's characteristics and intended service, the horizontal shear force is also to be calculated, using direct calculations, and taken into account in the calculation of shear stresses.

c) As an alternative to the above procedure, the shear stresses induced by the vertical shear forces Q_{SW} and Q_{WV} may be obtained through the simplified procedure in [3.1.4] and [3.1.5].

3.1.4 Simplified calculation of shear stresses induced by vertical shear forces for ships without effective longitudinal bulkheads or with one effective longitudinal bulkhead

In this context, effective longitudinal bulkhead means a bulkhead extending from the bottom to the strength deck.

The shear stresses induced by the vertical shear forces in the calculation point are obtained, in N/mm², from the following formula:

$$\tau_1 = (Q_{SW} + Q_{WV} - \varepsilon\Delta Q_C)\frac{S}{I_Y t}\delta$$

where:

$\varepsilon = \mathrm{sgn}(Q_{SW})$

δ : Shear distribution coefficient defined in Tab 1

t : Minimum thickness, in mm, of side, inner side and longitudinal bulkhead plating, as applicable according to Tab 1

ΔQ_C : Shear force correction (see Fig 2), which takes into account, when applicable, the portion of loads transmitted by the double bottom girders to the transverse bulkheads:

- for ships with double bottom in alternate loading conditions:

$$\Delta Q_C = \alpha\left|\frac{P}{B_H \ell_C} - \rho T_1\right|$$

- for other ships:

$$\Delta Q_C = 0$$

with:

$$\alpha = g\frac{\ell_0 b_0}{2 + \varphi\frac{\ell_0}{b_0}}$$

$$\varphi = 1{,}38 + 1{,}55\frac{\ell_0}{b_0} \le 3{,}7$$

ℓ_0, b_0 : Length and breadth, respectively, in m, of the flat portion of the double bottom in way of the hold considered; b_0 is to be measured on the hull transverse section at the middle of the hold

B_H : Unit's breadth, in m, measured on the hull transverse section at the middle of the hold considered

ℓ_C : Length, in m, of the hold considered, measured between transverse bulkheads.

P : Total mass of cargo, in t, in the hold

T_1 : Draught, in m, measured vertically on the hull transverse section at the middle of the hold considered, from the moulded baseline to the waterline in the loading condition considered

ρ : Sea water density, in t/m³, taken equal to 1,025

Figure 2 : Shear force correction ΔQ_C

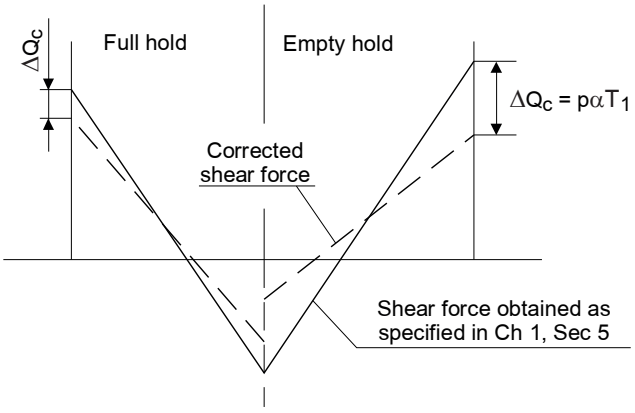

Table 1 : Shear stresses induced by vertical shear forces

Ship typology		Location	t, in mm	δ	Meaning of symbols used in the definition of δ
Double side ships without effective longitudinal bulkheads	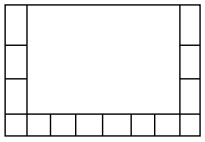	Sides	t_S	$(1 - \Phi) / 2$	$\Phi = 0{,}275 + 0{,}25\,\alpha$ $\alpha = t_{ISM} / t_{SM}$
		Inner sides	t_{IS}	$\Phi / 2$	
Double side ships with one effective longitudinal bulkhead	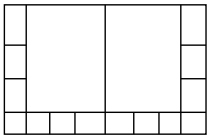	Sides	t_S	$(1 - \Phi)\Psi / 2$	$\Phi = 0{,}275 + 0{,}25\,\alpha$ $\alpha = t_{ISM} / t_{SM}$ $\Psi = 1{,}9\beta\left[\gamma\left(2\delta + 1 + \frac{1}{\alpha_0}\right) - 0{,}17\right]$ $\chi = \frac{\Psi}{0{,}85 + 0{,}17\alpha}$ $\alpha_0 = \frac{0{,}5 t_{BM}}{t_{SM} + t_{ISM}}$ $\beta = \frac{0{,}75}{3\delta + \alpha_0 + 1}$ $\gamma = \frac{2\delta + 1}{4\delta + 1 + \frac{1}{\alpha_0}}$ $\delta = \frac{B}{2D}$
		Inner sides	t_{IS}	$\Phi\Psi / 2$	
		Longitudinal bulkhead	t_B	$1 - \chi$	

Note 1:

t_S, t_{IS}, t_B : Minimum thicknesses, in mm, of side, inner side and longitudinal bulkhead plating, respectively

t_{SM}, t_{ISM}, t_{BM} : Mean thicknesses, in mm, over all the strakes of side, inner side and longitudinal bulkhead plating, respectively. They are calculated as $\Sigma(\ell_i\, t_i) / \Sigma\ell_i$, where ℓ_i and t_i are the length, in m, and the thickness, in mm, of the ith strake of side, inner side and longitudinal bulkhead.

3.1.5 Simplified calculation of shear stresses induced by vertical shear forces for ships with two effective longitudinal bulkheads

In this context, effective longitudinal bulkhead means a bulkhead extending from the bottom to the strength deck.

The shear stresses induced by the vertical shear force in the calculation point are obtained, in N/mm², from the following formula:

$$\tau_1 = [(Q_{SW} + Q_{WV})\delta + \varepsilon_Q \Delta Q]\frac{S}{I_\gamma t}$$

where:

δ : Shear distribution coefficient defined in Tab 2

$$\varepsilon_Q = \mathrm{sgn}\left(\frac{Q_F - Q_A}{\ell_C}\right)$$

Q_F, Q_A : Value of Q_{SW}, in kN, in way of the forward and aft transverse bulkhead, respectively, of the hold considered

ℓ_C : Length, in m, of the hold considered, measured between transverse bulkheads

t : Minimum thickness, in mm, of side, inner side and longitudinal bulkhead plating, as applicable according to Tab 2

ΔQ : Shear force correction, in kN, which takes into account the redistribution of shear force between sides and longitudinal bulkheads due to possible transverse non-uniform distribution of cargo:

- in sides:

$$\Delta Q = \frac{\varepsilon(p_C - p_W)\ell_C b_C}{4}\left[\frac{n}{3(n+1)} - (1 - \Phi)\right]$$

- in longitudinal bulkheads:

$$\Delta Q = \frac{\varepsilon(p_C - p_W)\ell_C b_C}{4}\left[\frac{2n}{3(n+1)} - \Phi\right]$$

with:

$\varepsilon = \mathrm{sgn}(Q_{SW})$

b_C : Breadth, in m, of the centre hold, measured between longitudinal bulkheads

n : Number of floors in way of the centre hold

p_C : Pressure, in kN/m², acting on the inner bottom in way of the centre hold in the loading condition considered

p_W : Pressure, in kN/m², acting on the inner bottom in way of the wing hold in the loading condition considered, to be taken not greater than p_C

Φ : Coefficient defined in Tab 2

Table 2 : Shear stresses induced by vertical shear forces

Ship typology		Location	t, in mm	δ	Meaning of symbols used in the definition of δ
Single side ships with two effective longitudinal bulkheads	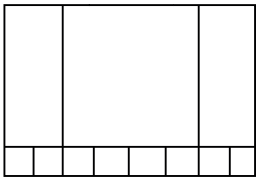	Sides	t_S	$(1 - \Phi) / 2$	$\Phi = 0,3 + 0,21\ \alpha$ $\alpha = t_{BM} / t_{SM}$
		Longitudinal bulkheads	t_B	$\Phi / 2$	
Double side ships with two effective longitudinal bulkheads	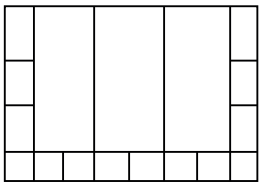	Sides	t_S	$(1 - \Phi) / 4$	$\Phi = 0,275 + 0,25\ \alpha$ $\alpha = \frac{t_{BM}}{t_{SM} + t_{ISM}}$
		Inner sides	t_{IS}	$(1 - \Phi) / 4$	
		Longitudinal bulkheads	t_B	$\Phi / 2$	

Note 1:

t_S, t_{IS}, t_B : Minimum thicknesses, in mm, of side, inner side and longitudinal bulkhead plating, respectively

t_{SM}, t_{ISM}, t_{BM} : Mean thicknesses, in mm, over all the strakes of side, inner side and longitudinal bulkhead plating, respectively. They are calculated as $\Sigma(\ell_i\, t_i) / \Sigma\ell_i$, where ℓ_i and t_i are the length, in m, and the thickness, in mm, of the i_{th} strake of side, inner side and longitudinal bulkheads.

3.2 Checking criteria

3.2.1 Normal stresses induced by vertical bending moments

It is to be checked that the normal stresses σ_1 calculated according to [3.1.1] are in compliance with the following formula:

$\sigma_1 \le \sigma_{1,ALL}$

where:

$\sigma_{1,ALL}$: Allowable normal stress, in N/mm², obtained from the following formulae:

$$\sigma_{1,ALL} = \frac{125}{k} \quad \text{for} \quad \frac{x}{L} \le 0,1$$

$$\sigma_{1,ALL} = \frac{175}{k} - \frac{250}{k}\left(\frac{x}{L} - 0,1\right) \quad \text{for} \quad 0,1 < \frac{x}{L} < 0,3$$

$$\sigma_{1,ALL} = \frac{175}{k} \quad \text{for} \quad 0,3 \le \frac{x}{L} \le 0,7$$

$$\sigma_{1,ALL} = \frac{175}{k} - \frac{250}{k}\left(\frac{x}{L} - 0,7\right) \quad \text{for} \quad 0,7 < \frac{x}{L} < 0,9$$

$$\sigma_{1,ALL} = \frac{125}{k} \quad \text{for} \quad \frac{x}{L} \ge 0,9$$

3.2.2 Shear stresses

It is to be checked that the shear stresses τ_1 calculated according to [3.1.3], [3.1.4] and [3.1.5] are in compliance with the following formula:

$\tau_1 \leq \tau_{1,ALL}$

where:

$\tau_{1,ALL}$: Allowable shear stress, in N/mm²: $\tau_{1,ALL} = 110 / k$

3.3 Section modulus and moment of inertia

3.3.1 General

The requirements in [3.3] provide the minimum hull girder section modulus, complying with the checking criteria indicated in [3.2], and the midship section moment of inertia required to ensure sufficient hull girder rigidity.

The k material factors are to be defined with respect to the materials used for the bottom and deck members contributing to the longitudinal strength according to [1.2]. When material factors for higher strength steels are used, the requirements in [3.3.5] apply.

3.3.2 Section modulus within 0,4 L amidships

The gross section moduli Z_{AB} and Z_{AD} within 0,4 L amidships are to be not less than the greater value of $Z_{R,Min}$ and Z_R , in m³, obtained from the following formulae:

$Z_{R,MIN} = n_1 \, C \, L^2 \, B \, (C_B + 0,7) \, k \, 10^{-6}$

$$Z_R = \frac{M_{SW} + M_{WV}}{\sigma_{1,ALL}} 10^{-3}$$

where:

C_B : Total block coefficient:

$$C_B = \frac{\Delta}{1,025 LBT}$$

n_1 : Coefficient defined as follows:

- when a navigation notation completes the transit or site notation of the unit, n_1 is to be taken as given in Tab 3
- when no navigation notation is granted to the unit for the transit or site condition, n_1 is to be taken equal to the value of factor of environment for vertical wave bending moment, f_{VBM}, as defined in Ch 1, Sec 5, [3.2], but not less than 0,80.

$Z_{R,MIN}$: Minimum section modulus taken as the maximum value between $Z_{R,MIN}$ calculated for transit condition and calculated for site condition. Parameters n_1 and C_B are to be taken accordingly

Where the total breadth Σb_S of small openings, as defined in [1.2], is deducted from the sectional areas included in the hull girder transverse sections, the values Z_R and $Z_{R,MIN}$ may be reduced by 3%.

Scantlings of members contributing to the longitudinal strength (see [1.2]) are to be maintained within 0,4 L amidships.

Table 3 : Navigation coefficient n_1 when a navigation notation is assigned

Navigation notation	Navigation coefficient n_1
unrestricted navigation	1,00
summer zone	0,95
tropical zone	0,90
coastal area	0,90
sheltered area	0,80

3.3.3 Section modulus outside 0,4 L amidships

The gross section moduli Z_{AB} and Z_{AD} outside 0,4 L amidships are to be not less than the value Z_R , in m³, obtained, in m³, from the following formula:

$$Z_R = \frac{M_{SW} + M_{WV}}{\sigma_{1,ALL}} 10^{-3}$$

Scantlings of members contributing to the hull girder longitudinal strength (see [1.2]) may be gradually reduced, outside 0,4 L amidships, to the minimum required for local strength purposes at fore and aft parts, as specified in Ch 1, Sec 11.

3.3.4 Midship section moment of inertia

The gross midship section moment of inertia about its horizontal neutral axis is to be not less than the value obtained, in m^4, from the following formula:

$I_{YR} = 3\ Z'_{R,MIN}\ L\ 10^{-2}$

where $Z'_{R,MIN}$ is the required midship section modulus $Z_{R,MIN}$, in m^3, calculated as specified in [3.3.2], but assuming k = 1.

3.3.5 Extent of higher strength steel

When a material factor for higher strength steel is used in calculating the required section modulus at bottom or deck according to [3.3.2] or [3.3.3], the relevant higher strength steel is to be adopted for the members contributing to the longitudinal strength (see [1.2]), at least up to a vertical distance, in m, obtained from the following formulae:

- above the baseline (for section modulus at bottom):

$$V_{HB} = \frac{\sigma_{1B} - k\sigma_{1,ALL}}{\sigma_{1B} + \sigma_{1D}} z_D$$

- below a horizontal line located at a distance V_D (see [1.2]) above the neutral axis of the hull transverse section (for section modulus at deck):

$$V_{HD} = \frac{\sigma_{1D} - k\sigma_{1,ALL}}{\sigma_{1B} + \sigma_{1D}} (N + V_D)$$

where:

N : Z co-ordinate, in m, of the centre of gravity of the hull transverse section defined in [1.2], with respect to the reference co-ordinate system defined in Ch 1, Sec 1, [3.3]

V_D : Vertical distance, in m, defined in [1.2]

z_D : Z co-ordinate, in m, of the strength deck, defined in [1.2], with respect to the reference co-ordinate system defined in Ch 1, Sec 1, [3.3]

σ_{1B}, σ_{1D} : Normal stresses, in N/mm^2, at bottom and deck, respectively, calculated according to [3.1.1].

The higher strength steel is to extend in length at least throughout 0,4 L amidships where it is required for strength purposes.

4 Ultimate strength check

4.1 General

4.1.1 The ultimate strength of the hull girder is to be checked for transit and on site conditions.

The check is to be done on net scantlings, calculated according to Ch 1, Sec 3, [7].

The partial safety factors to be taken into account are those given in [4.2].

4.2 Partial safety factors

4.2.1 The safety factors to be taken into account in the ultimate strength check of the hull girder are those given in Tab 4.

Table 4 : Partial safety factors

Partial safety factor covering uncertainties on:	Symbol	On-site condition value	Transit condition value
Still water hull girder loads	γ_{S1}	1,00	1,00
Wave induced hull girder loads	γ_{W1}	1,25 **(1)**	1,10
Material	γ_m	1,02	1,02
Resistance	γ_R	1,10	1,03
(1) If the vertical wave bending moment M_{WV} considered is derived from hydrodynamic calculations with a 10 000 years return period, the partial safety factor γ_{W1} may be reduced to 1,00. In this case, the product γ_{W1} x M_{WV} defined above with 10 000 years RP is not to be less than 1,25 M_{WV} derived with 100 years RP.			

4.3 Hull girder loads

4.3.1 Bending moment

The bending moments in transit and on site conditions, in sagging and hogging, to be considered in the ultimate strength check of the hull girder, are to be obtained, in kN.m, from the following formula:

$M = \gamma_{S1}\ M_{SW} + \gamma_{W1}\ M_{WV}$

4.4 Hull girder ultimate bending moment capacities

4.4.1 The hull girder ultimate bending moment capacities are to be determined according to Pt B, Ch 6, Sec 2, [2.3] and Pt B, Ch 6, App 2 of the Ship Rules.

4.4.2 Hull girder transverse sections

The hull girder transverse sections are constituted by the elements contributing to the hull girder longitudinal strength, considered with their net scantlings, according to [1.2].

4.5 Checking criteria

4.5.1 It is to be checked that the hull girder ultimate bending capacity at any hull transverse section is in compliance with the following formula:

$$\frac{M_U}{\gamma_R \gamma_m} \geq M$$

where:

M_U : Ultimate bending moment capacity of the hull transverse section considered, in kN.m, as defined in Pt B, Ch 6, Sec 2, [2.1] of the Ship Rules

M : Bending moment in transit and on-site conditions, in kN.m, defined in [4.3.1].

Section 7 Scantlings of plating

Symbols

c_a : Aspect ratio of the plate panel, equal to:

$$c_a = 1{,}21\sqrt{1 + 0{,}33\left(\frac{s}{\ell}\right)^2} - 0{,}69\frac{s}{\ell}$$

to be taken not greater than 1,0

c_r : Coefficient of curvature of the panel, equal to:

$$C_r = 1 - \frac{0{,}5\,s}{r}$$

to be taken not less than 0,5

k : Material factor as defined in Pt B, Ch 4, Sec 1, [2.2] of the Ships Rules

ℓ : Length, in m, of the longer side of the plate panel

L : Rule length, in m, as defined in Ch 1, Sec 1, [3.2.6]

$M_{SW,H}$: Design still water bending moment, in kN.m, in hogging condition, at the hull transverse section considered, defined in Ch 1, Sec 5

$M_{SW,S}$: Design still water bending moment, in kN.m, in sagging condition, at the hull transverse section considered, defined in Ch 1, Sec 5

M_{WH} : Horizontal wave bending moment, in kN.m, at the hull transverse section considered, defined in Ch 1, Sec 5

$M_{WV,H}$: Vertical wave bending moment, in kN.m, in hogging condition, at the hull transverse section considered, defined in Ch 1, Sec 5

$M_{WV,S}$: Vertical wave bending moment, in kN.m, in sagging condition, at the hull transverse section considered, defined in Ch 1, Sec 5

N : Z co-ordinate, in m, of the centre of gravity of the hull transverse section constituted by members contributing to the hull girder longitudinal strength considered as having their net scantlings

p_S : Still water pressure, in kN/m², see [3.2.3]

r : Radius of curvature of the panel, in m

R_y : Minimum yield stress, in N/mm², of the material, to be taken equal to 235/k N/mm², unless otherwise specified

s : Length, in m, of the shorter side of the plate panel

x, y, z : X, Y and Z co-ordinates, in m, of the calculation point with respect to the reference co-ordinate system defined in Ch 1, Sec 1, [3.3]

σ_{X1} : In-plane hull girder normal stress, in N/mm², defined in:

- [3.2.6] for the strength check of plating subjected to lateral pressure
- [4.2.1] for the buckling check of plating

τ_1 : In-plane hull girder shear stress, in N/mm², defined in [3.2.7].

1 General

1.1 Principles

1.1.1 General

The plating thickness is to be calculated according to the present section.

1.1.2 The requirements of the present Section cover the assessment of plating for the transit and site conditions of the unit, except when otherwise specified.

The hull scantlings are to be evaluated independently for transit and site conditions.

1.2 Net thicknesses

1.2.1 As specified in Ch 1, Sec 3, [7], all thicknesses referred to in this Section are net, i.e. they do not include any margin for corrosion.

The gross thicknesses are obtained as specified in Ch 1, Sec 3, [8].

1.3 Partial safety factors

1.3.1 The partial safety factors to be considered for the checking of the plating are specified in Tab 1.

Table 1 : Plating - Partial safety factors

Partial safety factors covering uncertainties regarding:	Symbol	Strength check of plating subjected to lateral pressure				Buckling check
		General	Sloshing pressure	Watertight bulkhead plating **(1)**	Testing check	
Still water hull girder loads	γ_{S1}	1,00	0	1,00	N.A.	1,00
Wave hull girder loads	γ_{W1}	1,07	0	1,07	N.A.	1,07
Still water pressure	γ_{S2}	1,00	1,00	1,00	1,00	N.A.
Wave pressure	γ_{W2}	1,07	1,05	1,07	N.A.	N.A.
Material	γ_m	1,02	1,02	1,02	1,02	N.A.
Resistance	γ_R	1,02	1,10	1,02 **(2)**	1,05	N.A.

(1) Applies also to plating of bulkheads or inner side which constitute boundary of compartments not intended to carry liquids.
(2) For plating of the collision bulkhead, γ_R =1,25
Note 1: N.A. = not applicable.

1.4 Elementary plate panel

1.4.1 The elementary plate panel is the smallest unstiffened part of plating.

1.5 Load point

1.5.1 Unless otherwise specified, lateral pressure and hull girder stresses are to be calculated:

- for longitudinal framing, at the lower edge of the elementary plate panel or, in the case of horizontal plating, at the point of minimum y-value among those of the elementary plate panel considered
- for transverse framing, at the lower edge of elementary plate panel or at the lower strake welding joint, if any.

2 General requirements

2.1 General

2.1.1 The requirements in [2.2] to [2.5] are to be applied to plating in addition of those in Article [3] to Article [4].

2.2 Minimum net thicknesses

2.2.1 The net thickness of plating is to be not less than the values given in Tab 2.

2.3 Bilge plating

2.3.1 The net thickness of the longitudinally framed bilge plating, in mm, is to be not less than the value obtained from [3.3.1].

2.3.2 The net thickness of the transversely framed bilge plating, in mm, is to be not less than:

$t = 0,7\ [\ \gamma_R\ \gamma_m\ (\gamma_{S2}\ p_S + \gamma_{W2}\ p_W)\ s_b\ ]^{0,4}\ R^{0,6}\ k^{1/2}$

where:

p_s : Still water sea pressure, defined in Ch 1, Sec 5, [5.3]

p_w : Wave pressure, defined in Ch 1, Sec 5, [5.4] and Ch 1, Sec 5, [5.5] for each load case “a”, “b”, “c” and “d”

R : Bilge radius, in m

s_b : Spacing of floors or transverse bilge brackets, in m.

2.3.3 The net thickness bilge plating is to be not less than the actual thicknesses of the adjacent bottom or side plating, whichever is the greater.

2.3.4 The net thickness of bilge plating is to be such as to satisfy the buckling check, as indicated in Article [4].

Table 2 : Minimum net thickness of plating (in mm)

Plating	Minimum net thickness
Keel	$3,8 + 0,040\ L\ k^{1/2} + 4,5\ s$
Bottom	
• longitudinal framing	$1,9 + 0,032\ L\ k^{1/2} + 4,5\ s$
• transverse framing	$2,8 + 0,032\ L\ k^{1/2} + 4,5\ s$
Inner bottom	
• outside the engine room	$1,9 + 0,024\ L\ k^{1/2} + 4,5\ s$
• engine room	$3,0 + 0,024\ L\ k^{1/2} + 4,5\ s$
Side	
• below freeboard deck	$2,1 + 0,031\ L\ k^{1/2} + 4,5\ s$
• between freeboard deck and strength deck	$2,1 + 0,013\ L\ k^{1/2} + 4,5\ s$
Inner side	
• L < 120 m	$1,7 + 0,013\ L\ k^{1/2} + 4,5\ s$
• L ≥ 120 m	$3,6 + 2,20\ k^{1/2} + s$
Weather strength deck and trunk deck, if any	
• area within 0,4 L amidships	
- longitudinal framing	$1,6 + 0,032\ L\ k^{1/2} + 4,5\ s$
- transverse framing	$1,6 + 0,040\ L\ k^{1/2} + 4,5\ s$
• area outside 0,4 L amidships	**(1)**
• at fore and aft part	$2,1 + 0,013\ L\ k^{1/2} + 4,5\ s$
Accommodation deck	
• L < 120 m	$1,3 + 0,004\ L\ k^{1/2} + 4,5\ s$
• L ≥ 120 m	$2,1 + 2,20\ k^{1/2} + s$
Platform in engine room	
• L < 120 m	$1,7 + 0,013\ L\ k^{1/2} + 4,5\ s$
• L ≥ 120 m	$3,6 + 2,20\ k^{1/2} + s$
Transv. watertight bulkhead	
• L < 120 m	$1,3 + 0,004\ L\ k^{1/2} + 4,5\ s$
• L ≥ 120 m	$2,1 + 2,20\ k^{1/2} + s$
Longitud. watertight bulkhead	
• L < 120 m	$1,7 + 0,013\ L\ k^{1/2} + 4,5\ s$
• L ≥ 120 m	$3,6 + 2,20\ k^{1/2} + s$
Tank and wash bulkheads	
• L < 120 m	$1,7 + 0,013\ L\ k^{1/2} + 4,5\ s$
• L ≥ 120 m	$3,6 + 2,20\ k^{1/2} + s$
(1) The minimum net thickness is to be obtained by linearly interpolating between that required for the area within 0,4 L amidships and that at the fore and aft part.	
Note 1: L need not be taken greater than 300 m.	

2.4 Sheerstrake

2.4.1 Welded sheerstrake

The net thickness of a welded sheerstrake is to be not less than that of the adjacent side plating, taking into account higher strength steel corrections if needed.

In general, the required net thickness of the adjacent side plating is to be taken as a reference. In specific case, depending on its actual net thickness, this latter may be required to be considered when deemed necessary by the Society.

2.4.2 Rounded sheerstrake

The net thickness of a rounded sheerstrake is to be not less than the actual net thickness of the adjacent deck plating.

2.4.3 Net thickness of the sheerstrake in way of breaks of long superstructures

The net thickness of the sheerstrake is to be increased in way of breaks of long superstructures occurring within 0,5L amidships, over a length of about one sixth of the unit's breadth on each side of the superstructure end.

This increase in net thickness is to be equal to 40%, but need not exceed 4,5 mm.

Where the breaks of superstructures occur outside 0,5L amidships, the increase in net thickness may be reduced to 30%, but need not exceed 2,5 mm.

2.4.4 Net thickness of the sheerstrake in way of breaks of short superstructures

The net thickness of the sheerstrake is to be increased in way of breaks of short superstructures occurring within 0,6L amidships, over a length of about one sixth of the unit's breadth on each side of the superstructure end.

This increase in net thickness is to be equal to 15%, but need not exceed 4,5 mm.

2.5 Stringer plate

2.5.1 General

The net thickness of the stringer plate is to be not less than the actual net thickness of the adjacent deck plating.

2.5.2 Net thickness of the stringer plate in way of breaks of long superstructures

The net thickness of the stringer plate is to be increased in way of breaks of long superstructures occurring within 0,5L amidships, over a length of about one sixth of the unit's breadth on each side of the superstructure end.

This increase in net thickness is to be equal to 40%, but need not exceed 4,5 mm.

Where the breaks of superstructures occur outside 0,5 L amidships, the increase in net thickness may be reduced to 30%, but need not exceed 2,5 mm.

2.5.3 Net thickness of the stringer plate in way of breaks of short superstructures

The net thickness of the stringer plate is to be increased in way of breaks of short superstructures occurring within 0,6L amidships, over a length of about one sixth of the unit's breadth on each side of the superstructure end.

This increase in net thickness is to be equal to 15%, but need not exceed 4,5 mm.

3 Strength check of plating subjected to lateral pressure

3.1 General

3.1.1 The requirements of this Article apply for the strength check of plating subjected to lateral pressure and, for plating contributing to the longitudinal strength, to in-plane hull girder normal and shear stresses.

3.2 Load model

3.2.1 General

The still water and wave lateral pressures induced by the sea and the various types of cargoes and ballast in intact conditions are to be considered, depending on the location of the plating under consideration and the type of the compartments adjacent to it, in accordance with Ch 1, Sec 5, [1.3.7].

The plating located below the deepest equilibrium waterline (excluding side shell plating) which constitute boundaries intended to stop vertical and horizontal flooding is to be subjected to lateral pressure in flooding conditions.

The wave lateral pressures and hull girder loads are to be calculated in the mutually exclusive load cases "a", "b", "c" and "d" in Ch 1, Sec 5, [4].

3.2.2 Load definition criteria

a) Cargo and ballast distribution

When calculating the local loads for the structural scantling of an element which separates two adjacent compartments, the latter may not be considered simultaneously loaded. The local loads to be used are those obtained considering the two compartments individually loaded.

For elements of the outer shell, the local loads are to be calculated considering separately:

- the still water and wave external sea pressures, considered as acting alone without any counteraction from the unit interior
- the still water and wave differential pressures (internal pressure minus external sea pressure) considering the compartment adjacent to the outer shell as being loaded.

b) Draught associated with each cargo and ballast distribution

Local loads are to be calculated on the basis of the ship's draught T_1 corresponding to the cargo or ballast distribution considered according to the criteria in item a). The unit draught is to be taken as the distance measured vertically on the hull transverse section at the middle of the length L, from the moulded base line to the waterline in:

- full load condition, when:
  - one or more cargo compartments are considered as being loaded and the ballast tanks are considered as being empty
  - the still water and wave external pressures are considered as acting alone without any counteraction from the ship's interior
- light ballast condition, when one or more ballast tanks are considered as being loaded and the cargo compartments are considered as being empty. In the absence of more precise information, the ship's draught in light ballast condition may be obtained, in m, from the following formulae:

  $T_B = 0{,}03\ L < 7{,}5$ m in general

3.2.3 Lateral pressure in intact conditions

The lateral pressure in intact conditions is constituted by still water pressure and wave pressure.

Still water pressure (p_S) includes:

- the still water sea pressure, defined in Ch 1, Sec 5, [5.3]
- the still water internal pressure, defined in Ch 1, Sec 5, [6] for the various types of cargoes and for ballast.

Wave pressure (p_W) includes:

- the wave pressure, defined in Ch 1, Sec 5, [5.4] and Ch 1, Sec 5, [5.5] for each load case “a”, “b”, “c” and “d”
- the inertial pressure, defined in Ch 1, Sec 5, [6] for the various types of cargoes and for ballast, and for each load case “a”, “b”, “c” and “d”
- the dynamic pressures, according to the criteria in Ch 1, Sec 5, [6.4].

Sloshing and impact pressures are to be applied to plating of tank structures, when such tanks are partly filled and if a risk of resonance exists (see Ch 1, Sec 5, [6.4]).

3.2.4 Lateral pressure in flooding conditions

The lateral pressure in flooding conditions is constituted by the still water pressure p_{SF} and wave pressure p_{WF} defined in Ch 1, Sec 5, [6.6].

3.2.5 Lateral pressure in testing conditions

The lateral pressure (p_T) in testing conditions is taken equal to:

- $p_T = p_{ST} - p_S$ for bottom shell plating and side shell plating
- $p_T = p_{ST}$ otherwise

where:

p_{ST} : Still water pressure defined in Ch 1, Sec 5, [6.7]

p_S : Still water sea pressure defined in Ch 1, Sec 5, [5.3] for the draught T_1 at which the testing is carried out.

If the draught T_1 is not defined by the Designer, it may be taken equal to the light ballast draught T_B defined in [3.2.2].

3.2.6 In-plane hull girder normal stresses

The in-plane hull girder normal stresses to be considered for the strength check of plating are obtained, in N/mm², from the following formulae:

- for plating not contributing to the hull girder longitudinal strength:

  $\sigma_{X1} = 0$
- for plating contributing to the hull girder longitudinal strength:

  $$\sigma_{X1} = \gamma_{S1}\sigma_{S1} + \gamma_{W1}C_{FT}(C_{FV}\sigma_{WV1} + C_{FH}\sigma_{WH1})$$

where:

σ_{S1}, σ_{WV1}, σ_{WH1} : Hull girder normal stresses, in N/mm², defined in Tab 3

C_{FV}, C_{FH} : Combination factors defined in Tab 4

Table 3 : Hull girder normal stresses

Condition	σ_{S1}, in N/mm²	σ_{WV1}, in N/mm²	σ_{WH1}, in N/mm²
$\dfrac{\lvert\gamma_{S1}M_{SW,S} + \gamma_{W1}M_{WV,S}\rvert}{\gamma_{S1}M_{SW,H} + \gamma_{W1}M_{WV,H}} \geq 1$	$\left\lvert\dfrac{M_{SW,S}}{I_Y}(z-N)\right\rvert 10^{-3}$	$\left\lvert\dfrac{M_{WV,S}}{I_Y}(z-N)\right\rvert 10^{-3}$	$\left\lvert\dfrac{M_{WH}}{I_Z}y\right\rvert 10^{-3}$
$\dfrac{\lvert\gamma_{S1}M_{SW,S} + \gamma_{W1}C_{FV}M_{WV,S}\rvert}{\gamma_{S1}M_{SW,H} + \gamma_{W1}M_{WV,H}} < 1$	$\left\lvert\dfrac{M_{SW,H}}{I_Y}(z-N)\right\rvert 10^{-3}$	$\left\lvert\dfrac{M_{WV,H}}{I_Y}(z-N)\right\rvert 10^{-3}$	

Table 4 : Combination factors C_{FV} and C_{FH}

Load case	C_{FV}	C_{FH}
"a"	1,0	0
"b"	0,7	0
"c"	0,4	1,0
"d"	0,25	0,7
Flooding	0,6	0

3.2.7 In-plane hull girder shear stresses

The in-plane hull girder shear stresses to be considered for the strength check of plating, subjected to lateral loads, which contributes to the longitudinal strength are obtained, in N/mm², from the following formula:

$$\tau_1 = \gamma_{S1}\tau_{S1} + C_{FV}\gamma_{W1}\tau_{W1}$$

where:

C_{FV} : Combination factor defined in Tab 4

τ_{S1} : Absolute value of the hull girder shear stresses, in N/mm², induced by the maximum still water hull girder vertical shear force in the section considered

τ_{W1} : Absolute value of the hull girder shear stresses, in N/mm², induced by the maximum wave hull girder vertical shear force in the section considered.

When the shear forces distribution in plating according to the theory of bidimensional flow of shear stresses is not known, τ_{S1} and τ_{W1} may be taken equal to the values indicated in Tab 5.

Table 5 : Hull girder shear stresses

Structural element	τ_{S1}, τ_{W1} in N/mm²
Bottom, inner bottom and decks (excluding possible longitudinal sloping plates)	0
Bilge, side, inner side and longitudinal bulkheads (including possible longitudinal sloping plates):	
• $0 \le z \le 0,25\ D$	$\tau_0\left(0,5 + 2\frac{z}{D}\right)$
• $0,25\ D < z \le 0,75\ D$	τ_0
• $0,75\ D < z \le D$	$\tau_0\left(2,5 - 2\frac{z}{D}\right)$
Note 1: τ_0 , in N/mm², to be taken equal to: $\tau_0 = \frac{47}{k}\left\{1 - \frac{6,3}{\sqrt{L}}\right\}$ N/mm² with L to be taken not greater than 200 m.	

3.3 Longitudinally framed plating contributing to the hull girder longitudinal strength

3.3.1 General

The net thickness of laterally loaded plate panels subjected to in-plane normal stress acting on the shorter sides is to be not less than the value obtained, in mm, from the following formula:

$$t = 14,9 c_a c_r s \sqrt{\gamma_R \gamma_m \frac{\gamma_{S2} p_S + \gamma_{W2} p_W}{\lambda_L R_y}}$$

where:

$$\lambda_L = \sqrt{1 - 3\left(\gamma_m \frac{\tau_1}{R_y}\right)^2 - 0,95\left(\gamma_m \frac{\sigma_{x1}}{R_y}\right)^2} - 0,225\gamma_m \frac{\sigma_{x1}}{R_y}$$

3.3.2 Flooding conditions

The net thickness of plating subject to flooding is to be not less than the value obtained, in mm, from the following formula:

$$t = 14{,}9 c_a c_r s \sqrt{\gamma_R \gamma_m \frac{\gamma_{S2} p_{SF} + \gamma_{W2} p_{WF}}{\lambda_L R_y}}$$

where λ_L is defined in [3.3.1].

3.3.3 Testing conditions

The plating of compartments or structures as defined in Ch 1, Sec 5, [6.7] is to be checked in testing conditions. To this end, its net thickness is to be not less than the value obtained, in mm, from the following formula:

$$t = 14{,}9 c_a c_r s \sqrt{\gamma_R \gamma_m \frac{\gamma_{S2} p_T}{R_y}}$$

3.4 Transversely framed plating contributing to the hull girder longitudinal strength

3.4.1 General

The net thickness of laterally loaded plate panels subjected to in-plane normal stress acting on the longer sides is to be not less than the value obtained, in mm, from the following formula:

$$t = 17{,}2 c_a c_r s \sqrt{\gamma_R \gamma_m \frac{\gamma_{S2} p_S + \gamma_{W2} p_W}{\lambda_T R_y}}$$

where:

$$\lambda_T = \sqrt{1 - 3\left(\gamma_m \frac{\tau_1}{R_y}\right)^2} - 0{,}89 \gamma_m \frac{\sigma_{x1}}{R_y}$$

3.4.2 Flooding conditions

The net thickness of plating subject to flooding is to be not less than the value obtained, in mm, from the following formula:

$$t = 17{,}2 c_a c_r s \sqrt{\gamma_R \gamma_m \frac{\gamma_{S2} p_{SF} + \gamma_{W2} p_{WF}}{\lambda_T R_y}}$$

where λ_T is defined in [3.4.1].

3.4.3 Testing conditions

The plating of compartments or structures as defined in Ch 1, Sec 5, [6.7] is to be checked in testing conditions. To this end, its net thickness is to be not less than the value obtained, in mm, from the following formula:

$$t = 14{,}9 c_a c_r s \sqrt{\gamma_R \gamma_m \frac{\gamma_{S2} p_T}{R_y}}$$

3.5 Plating not contributing to the hull girder longitudinal strength

3.5.1 General

The net thickness of plate panels subjected to lateral pressure is to be not less than the value obtained, in mm, from the following formula:

$$t = 14{,}9 c_a c_r s \sqrt{\gamma_R \gamma_m \frac{\gamma_{S2} p_S + \gamma_{W2} p_W}{R_y}}$$

3.5.2 Flooding conditions

The net thickness of plating subject to flooding is to be not less than the value obtained, in mm, from the following formula:

$$t = 14{,}9 c_a c_r s \sqrt{\gamma_R \gamma_m \frac{\gamma_{S2} p_{SF} + \gamma_{W2} p_{WF}}{R_y}}$$

3.5.3 Testing conditions

The plating of compartments or structures as defined in Ch 1, Sec 5, [6.7] is to be checked in testing conditions. To this end, its net thickness is to be not less than the value obtained, in mm, from the following formula:

$$t = 14{,}9 c_a c_r s \sqrt{\gamma_R \gamma_m \frac{\gamma_{S2} p_T}{R_y}}$$

3.6 Plating subject to impact loads

3.6.1 General

Unless otherwise specified, the net thickness of plate panels subject to impact generated by fluids is to be not less than the value obtained, in mm, from the following formula:

$$t = \frac{15,8\alpha s}{C_d}\sqrt{\frac{P_I}{R_{eH}}}$$

where:

α : Coefficient defined as follows:

$$\alpha = 1,2 - \frac{s}{2,1\ell}$$

without being taken greater than 1,0

C_d : Plate capacity correction coefficient:

- $C_d = 1,0$ for sloshing and flat bottom forward impact
- $C_d = 1,2$ for bow flare impact

P_I : Any impact pressure defined in the Rules, including:

- bottom impact pressure, as defined in Ch 1, Sec 11, [3.4]
- bow impact pressure, as defined in Ch 1, Sec 11, [4.3]
- dynamic impact pressure, as defined in Ch 1, Sec 5, [6.4.3]

R_{eH} : Minimum yield stress, in N/mm², of the plating material, defined in Ch 4, Sec 1, [2] of the Ship Rules.

If deemed necessary by the Society and depending on specific natures of loadings, different calculation methods may be applied, on a case-by-case basis.

4 Buckling check

4.1 General

4.1.1 The buckling check of plating is to be performed in accordance with NR615, Buckling Assessment of Plated Structures. The compression and shear stresses to be taken into account for the checking criteria are to be calculated in accordance with [4.2.1] to [4.2.5].

4.2 Load model

4.2.1 In-plane hull girder compression normal stresses

The in-plane hull girder compression normal stresses to be considered for the buckling check of plating contributing to the longitudinal strength in inclined unit conditions are obtained, in N/mm², from the following formula:

$$\sigma_{X1} = \gamma_{S1}\sigma_{S1} + \gamma_{w1}(C_{FV}\sigma_{WV1} + C_{FH}\sigma_{WH})$$

where:

C_{FV}, C_{FH} : Combination factors defined in Tab 4

σ_{S1}, σ_{WV1}, σ_{WH} : Hull girder normal stresses, in N/mm², defined in Tab 6.

σ_{X1} is to be taken as the maximum compression stress on the plate panel considered.

Table 6 : Hull girder normal compression stresses for buckling check of plates

Condition	σ_{S1} in N/mm²	σ_{WV1} in N/mm²	σ_{WH} in N/mm²
$z \geq N$	$\frac{M_{SW,S}}{I_Y}(z-N)10^{-3}$	$\frac{M_{WV,S}}{I_Y}(z-N)10^{-3}$	$-\left\lvert\frac{M_{WH}}{I_Z}y\right\rvert 10^{-3}$
$z < N$	$\frac{M_{SW,H}}{I_Y}(z-N)10^{-3}$	$\frac{M_{WV,H}}{I_Y}(z-N)10^{-3}$	

4.2.2 In-plane hull girder shear stresses

The in-plane hull girder shear stresses to be considered for the buckling check of plating are obtained as specified in [3.2.7] for the strength check of plating subjected to lateral pressure, which contributes to the longitudinal strength.

4.2.3 Combined in-plane hull girder and local compression normal stresses

The combined in-plane compression normal stresses to be considered for the buckling check of plating are to take into account the hull girder stresses and the local stresses resulting from the bending of the primary supporting members. These local stresses are to be obtained from a direct structural analysis using the design loads given in Ch 1, Sec 5.

With respect to the reference co-ordinate system defined in Ch 1, Sec 1, [3.3], the combined stresses in x and y direction are obtained, in N/mm², from the following formulae:

$\sigma_X = \sigma_{X1} + \gamma_{S2}\sigma_{X2,S} + \gamma_{W2}\sigma_{X2,W}$

$\sigma_Y = \gamma_{S2}\sigma_{Y2,S} + \gamma_{W2}\sigma_{Y2,W}$

where:

σ_{X1} : Compression normal stress, in N/mm², induced by the hull girder still water and wave loads, defined in [4.2.1]

$\sigma_{X2,S}$: Compression normal stress in x direction, in N/mm², induced by the local bending of the primary supporting members and obtained from a direct structural analysis using the still water design loads given in Ch 1, Sec 5

$\sigma_{X2,W}$: Compression normal stress in x direction, in N/mm², induced by the local bending of the primary supporting members and obtained from a direct structural analysis using the wave design loads given in Ch 1, Sec 5

$\sigma_{Y2,S}$: Compression normal stress in y direction, in N/mm², induced by the local bending of the primary supporting members and obtained from a direct structural analysis using the still water design loads given in Ch 1, Sec 5

$\sigma_{Y2,W}$: Compression normal stress in y direction, in N/mm², induced by the local bending of the primary supporting members and obtained from a direct structural analysis using the wave design loads given in Ch 1, Sec 5.

4.2.4 Combined in-plane hull girder and local shear stresses

The combined in-plane shear stresses to be considered for the buckling check of plating are to take into account the hull girder stresses and the local stresses resulting from the bending of the primary supporting members. These local stresses are to be obtained from a direct structural analysis using the design loads given in Ch 1, Sec 5.

The combined stresses are obtained, in N/mm², from the following formula:

$\tau = \tau_1 + \gamma_{S2}\,\tau_{2,S} + \gamma_{W2}\,\tau_{2,W}$

where:

τ_1 : Shear stress, in N/mm², induced by the hull girder still water and wave loads, defined in [3.2.7]

$\tau_{2,S}$: Shear stress, in N/mm², induced by the local bending of the primary supporting members and obtained from a direct structural analysis using the still water design loads given in Ch 1, Sec 5

$\tau_{2,W}$: Shear stress, in N/mm², induced by the local bending of the primary supporting members and obtained from a direct structural analysis using the wave design loads given in Ch 1, Sec 5.

4.2.5 Hull girder stress for prescriptive buckling check

For prescriptive buckling check of plating according to NR615, Buckling Assessment of Plated Structures, the hull girder stresses (σ_{hg}, τ_{hg}) are considered as follow:

$\sigma_{hg} = \sigma_{X1}$

$\tau_{hg} = \tau_1$

4.3 Buckling check criteria

4.3.1 The buckling strength of plating is to satisfy the following criterion:

$\eta \le \eta_{ALL}$ with: $\eta_{ALL} = 1$

η : Utilisation factor as defined in NR615.

Section 8 Scantling of ordinary stiffeners

Symbols

A_{Sh} : Net shear sectional area, in cm², of the stiffener, to be calculated as specified in Ch 1, Sec 3, [5.4]

E : Young's modulus, in N/mm², to be taken as defined in Ch 1, Sec 3

h_w : Web height, in mm

k : Material factor as defined in Pt B, Ch 4, Sec 1, [2.2] of the Ships Rules

ℓ : Span, in m, of ordinary stiffeners, measured between the supporting members, see Ch 1, Sec 3, [5.2]

m : Boundary coefficient, to be taken equal to:

- m = 12 for stiffeners clamped at both ends, whose end connections comply with the requirements in [3.2.2]
- m = 8 for stiffeners clamped at one end and simply supported at the other end, with the clamped end connection complying with the requirements in [3.2.2]
- m = 8 for stiffeners simply supported at both ends

$M_{SW,H}$: Design still water bending moment, in kN.m, in hogging condition, at the hull transverse section considered, defined in Ch 1, Sec 5

$M_{SW,S}$: Design still water bending moment, in kN.m, in sagging condition, at the hull transverse section considered, defined in Ch 1, Sec 5

M_{WH} : Horizontal wave bending moment, in kN.m, at the hull transverse section considered, defined in Ch 1, Sec 5

$M_{WV,H}$: Vertical wave bending moment, in kN.m, in hogging condition, at the hull transverse section considered, defined in Ch 1, Sec 5

$M_{WV,S}$: Vertical wave bending moment, in kN.m, in sagging condition, at the hull transverse section considered, defined in Ch 1, Sec 5

N : Z co-ordinate, in m, of the centre of gravity of the hull transverse section constituted by members contributing to the hull girder longitudinal strength, considered as having their net scantlings

p_S : Still water pressure, in kN/m², see [3.3.2]

p_W : Wave pressure, in kN/m², (see [3.3.2])

R_{eH} : Specified minimum yield stress, in N/mm², of the material

R_m : Specified minimum tensile strength, in N/mm², of the material

R_y : Minimum yield stress, in N/mm², of the material, to be taken equal to 235/k N/mm², unless otherwise specified

s : Spacing, in m, of ordinary stiffeners

t_w : Net web thickness, in mm

w : Net section modulus, in cm³, of the stiffener, to be calculated as specified in Ch 1, Sec 3, [5.4]

b_p : Width, in m, of the plating attached to the stiffener, for the yielding check, defined in Ch 1, Sec 3, [5.3.1]

x, y, z : X, Y and Z co-ordinates, in m, of the calculation point with respect to the reference co-ordinate system defined in Ch 1, Sec 1, [3.3]

σ_{X1} : Hull girder normal stress, in N/mm², defined in:

- [3.3.5] for the yielding check of ordinary stiffeners
- [4.2.1] for the buckling check of ordinary stiffeners.

1 General

1.1 Principles

1.1.1 The scantling of ordinary stiffeners is to be calculated according to the present Section.

1.1.2 The requirements of the present Section cover the assessment of ordinary stiffeners for the transit and site conditions of the unit, except when otherwise specified.

The scantlings are to be evaluated independently for transit and site conditions.

1.2 Net thickness

1.2.1 As specified in Ch 1, Sec 3, [7], all thicknesses referred to in this Section are net, i.e. they do not include any margin for corrosion. The gross thicknesses are obtained as specified in Ch 1, Sec 3, [8].

1.3 Partial safety factors

1.3.1 The partial safety factors to be considered for the checking of the plating are specified in Tab 1.

Table 1 : Ordinary stiffeners - Partial safety factors

Partial safety factors covering uncertainties regarding:	Symbol	Yielding check				Buckling check	Ultimate strength check
		General	Sloshing pressure	Watertight bulkhead ordinary stiffeners **(1)**	Testing check		
Still water hull girder loads	γ_{S1}	1,00	0	1,00	N.A.	1,00	1,00
Wave hull girder loads	γ_{W1}	1,07	0	1,07	N.A.	1,07	1,30
Still water pressure	γ_{S2}	1,00	1,00	1,003	1,00	1,00	1,00
Wave pressure	γ_{W2}	1,07	1,10	1,05	N.A.	1,15	1,40
Material	γ_m	1,02	1,02	1,02	1,02	N.A.	1,02
Resistance	γ_R	1,02	1,02	1,02 **(2)**	1,20	N.A.	1,02

(1) Applies also to ordinary stiffeners of bulkheads or inner side which constitute boundary of compartments not intended to carry liquids.
(2) For ordinary stiffeners of the collision bulkhead, γ_R =1,25.
Note 1: N.A. = Not applicable.

1.4 Slenderness requirement

1.4.1 Structural members are to comply with slenderness and proportion requirements of NR615, Buckling Assessment of Plated Structures.

1.5 Load point

1.5.1 Lateral pressure

Unless otherwise specified, lateral pressure is to be calculated at mid-span of the ordinary stiffener considered.

1.5.2 Hull girder stresses

For longitudinal ordinary stiffeners contributing to the hull girder longitudinal strength, the hull girder normal stresses are to be calculated in way of the attached plating of the stiffener considered.

2 General requirements

2.1 General

2.1.1 The requirements in [2.2] and [2.3] are to be applied to ordinary stiffeners in addition of those in Article [3] to Article [5].

2.2 Minimum net thicknesses

2.2.1 The net thickness of the web of ordinary stiffeners is to be not less than the lesser of:

- the value obtained, in mm, from the following formulae:

  $t_{MIN} = 0,8 + 0,004\ L\ k^{1/2} + 4,5\ s$ for $L < 120$ m

  $t_{MIN} = 1,6 + 2,2\ k^{1/2} + s$ for $L \geq 120$ m
- the net as built thickness of the attached plating.

2.3 Struts connecting ordinary stiffeners

2.3.1 The sectional area A_{SR}, in cm², and the moment of inertia I_{SR} about the main axes, in cm⁴, of struts connecting ordinary stiffeners are to be not less than the values obtained from the following formulae:

$$A_{SR} = \frac{p_{SR} s \ell}{20}$$

$$I_{SR} = \frac{0,75 s \ell (p_{SR1} + p_{SR2}) A_{ASR} \ell_{SR}^2}{47,2 A_{ASR} - s \ell (p_{SR1} + p_{SR2})}$$

where:

A_{ASR} : Actual net sectional area, in cm², of the strut

ℓ_{SR} : Length, in m, of the strut

p_{SR} : Pressure to be taken equal to the greater of the values obtained, in kN/m², from the following formulae:

$p_{SR} = 0,5\ (p_{SR1} + p_{SR2})$

$p_{SR} = p_{SR3}$

p_{SR1} : External pressure in way of the strut, in kN/m², acting on one side, outside the compartment in which the strut is located, equal to:

$p_{SR1} = \gamma_{S2}\ p_S + \gamma_{W2}\ p_W$

p_{SR2} : External pressure in way of the strut, in kN/m², acting on the opposite side, outside the compartment in which the strut is located, equal to:

$p_{SR2} = \gamma_{S2}\ p_S + \gamma_{W2}\ p_W$

p_{SR3} : Internal pressure at mid-span of the strut, in kN/m², in the compartment in which the strut is located, equal to:

$p_{SR3} = \gamma_{S2}\ p_S + \gamma_{W2}\ p_W$

2.4 Deck ordinary stiffeners in way of launching appliances used for survival craft or rescue boat

2.4.1 The scantlings of deck ordinary stiffeners are to be determined by direct calculations.

2.4.2 The loads exerted by launching appliance are to correspond to the SWL of the launching appliance.

2.4.3 The combined stress, in N/mm², is not to exceed the smaller of $R_{eH}/2,2$ and $R_m/4,5$.

3 Yielding check

3.1 General

3.1.1 The requirements of this Article apply for the yielding check of ordinary stiffeners subjected to lateral pressure and, for ordinary stiffeners contributing to the hull girder longitudinal strength, to hull girder normal stresses.

3.1.2 When tanks are partly filled and if a risk of resonance exists, the yielding check of vertical ordinary stiffeners of tank structures subjected to sloshing and impact pressures is to be carried out by direct calculation.

3.1.3 The yielding check is also to be carried out for ordinary stiffeners subjected to specific loads, such as concentrated loads.

3.2 Structural model

3.2.1 Boundary conditions

The requirements in [3.4.2], [3.4.3], [3.5] and [3.6] apply to stiffeners considered either:

- clamped at both ends with end connections complying with the requirements in
- clamped at one end and simply supported at the other end with the clamped end connection complying with the requirements in [3.2.2]
- simply supported at both ends.

For other boundary conditions, the yielding check is to be considered on a case by case basis.

3.2.2 Bracket arrangement

The requirements of this Article apply to ordinary stiffeners without end brackets, with a bracket at one end or with two end brackets, where the bracket length is not greater than 0,2 ℓ.

In the case of ordinary stiffeners with end brackets of length greater than 0,2 ℓ, the determination of normal and shear stresses due to design loads and the required section modulus and shear sectional area are considered by the Society on a case by case basis.

3.3 Load model

3.3.1 General

The still water and wave lateral loads induced by the sea and the various types of cargoes and ballast in intact conditions are to be considered, depending on the location of the ordinary stiffener under consideration and the type of compartments adjacent to it, in accordance with Ch 1, Sec 7, [3.2.2].

Ordinary stiffeners located on platings below the deepest equilibrium waterline (excluding those on side shell platings) which constitute boundaries intended to stop vertical and horizontal flooding are to be subjected to lateral pressure in flooding conditions.

The wave lateral loads and hull girder loads are to be calculated in the mutually exclusive load cases “a”, “b”, “c” and “d” in Ch 1, Sec 5, [4].

3.3.2 Lateral pressure in intact conditions

The lateral pressure in intact conditions is constituted by still water pressure and wave pressure.

Still water pressure (p_S) includes:

- the still water sea pressure, defined in Ch 1, Sec 5, [5.3]
- the still water internal pressure, defined in Ch 1, Sec 5, [6] for the various types of cargoes and for ballast.

Wave pressure (p_W) includes:

- the wave pressure, defined in Ch 1, Sec 5, [5.4] and Ch 1, Sec 5, [5.5] for each load case "a", "b", "c" and "d"
- the inertial pressure, defined in Ch 1, Sec 5, [6] for the various types of cargoes and for ballast, and for each load case "a", "b", "c" and "d"
- the dynamic pressures, according to the criteria in Ch 1, Sec 5, [6.4].

Sloshing and impact pressures are to be applied to ordinary stiffeners of tank structures, when such tanks are partly filled and if a risk of resonance exists (see Ch 1, Sec 5, [6.4]).

3.3.3 Lateral pressure in flooding conditions

The lateral pressure in flooding conditions is constituted by the still water pressure p_{SF} and wave pressure p_{WF} defined in Ch 1, Sec 5, [6.6].

p_{SF}, p_{WF} : Still water and wave pressures, in kN/m², in flooding conditions, defined in Ch 1, Sec 5, [6.6]

3.3.4 Lateral pressure in testing conditions

The lateral pressure (p_T) in testing conditions is taken equal to:

- $p_{ST} - p_S$ for bottom shell plating and side shell plating
- p_{ST} otherwise.

where:

p_{ST} : Still water pressure defined in Ch 1, Sec 5, [6.7]

p_S : Still water sea pressure defined in Ch 1, Sec 5, [5.3] for the draught T_1 at which the testing is carried out.
If the draught T_1 is not defined by the Designer, it may be taken equal to the light ballast draught T_B defined in Ch 1, Sec 7, [3.2.2].

3.3.5 Hull girder normal stresses

The hull girder normal stresses to be considered for the yielding check of ordinary stiffeners are obtained, in N/mm², from the following formulae:

- for longitudinal stiffeners contributing to the hull girder longitudinal strength and subjected to lateral pressure:
  $\sigma_{X1} = \gamma_{S1}\,\sigma_{S1} + \gamma_{W1}\,C_{FT}\,(C_{FV}\,\sigma_{WV1} + C_{FH}\,\sigma_{WH1})$
- for longitudinal stiffeners not contributing to the hull girder longitudinal strength:
  $\sigma_{X1} = 0$
- for transverse stiffeners:
  $\sigma_{X1} = 0$

where:

C_{FV}, C_{FH} : Combination factors defined in Tab 3

σ_{S1}, σ_{WV1}, σ_{WH1} : Hull girder normal stresses, in N/mm², defined in Tab 2.

Table 2 : Hull girder normal stresses - Ordinary stiffeners subjected to lateral pressure

Condition	σ_{S1}, in N/mm²	σ_{WV1}, in N/mm²	σ_{WH}, in N/mm²
Lateral pressure applied on the side opposite to the ordinary stiffener, with respect to the plating:			$\left\lvert \frac{M_{WH}}{I_Z} y \right\rvert 10^{-3}$
• $z \geq N$	$\left\lvert \frac{M_{SW,S}}{I_Y}(z-N) \right\rvert 10^{-3}$	$\left\lvert \frac{M_{WV,S}}{I_Y}(z-N) \right\rvert 10^{-3}$	
• $z < N$	$\left\lvert \frac{M_{SW,H}}{I_Y}(z-N) \right\rvert 10^{-3}$	$\left\lvert \frac{M_{WV,H}}{I_Y}(z-N) \right\rvert 10^{-3}$	
Lateral pressure applied on the same side as the ordinary stiffener:			
• $z \geq N$	$\left\lvert \frac{M_{SW,H}}{I_Y}(z-N) \right\rvert 10^{-3}$	$\left\lvert \frac{M_{WV,H}}{I_Y}(z-N) \right\rvert 10^{-3}$	
• $z < N$	$\left\lvert \frac{M_{SW,S}}{I_Y}(z-N) \right\rvert 10^{-3}$	$\left\lvert \frac{M_{WV,S}}{I_Y}(z-N) \right\rvert 10^{-3}$	

Table 3 : Combination factor C_{FV} and C_{FH} for stiffeners

Load case	C_{FV}	C_{FH}
"a"	1,0	0
"b"	0,7	0
"c"	0,4	1,0
"d"	0,25	0,7
Flooding	0,6	0

3.4 Net section modulus and net shear sectional area of ordinary stiffeners in intact conditions

3.4.1 Groups of equal ordinary stiffeners

Where a group of equal ordinary stiffeners is fitted, it is acceptable that the minimum net section modulus given in [3.4.2] to [3.4.4] is calculated as the average of the values required for all the stiffeners of the same group, but this average is to be taken not less than 90% of the maximum required value.

The same applies for the minimum net shear sectional area.

3.4.2 Single span longitudinal and transverse ordinary stiffeners subjected to lateral pressure

The net section modulus w, in cm³, and the net shear sectional area A_{Sh}, in cm², of longitudinal or transverse ordinary stiffeners subjected to lateral pressure are to be not less than the values obtained from the following formulae:

$$w = \gamma_R \gamma_m \beta_b \frac{\gamma_{S2} p_S + \gamma_{W2} p_W}{m(R_y - \gamma_R \gamma_m \alpha_S \sigma_{X1})} \left(1 - \frac{s}{2\ell}\right) s \ell^2 10^3$$

$$A_{Sh} = 10 \gamma_R \gamma_m \beta_s \frac{\gamma_{S2} p_S + \gamma_{W2} p_W}{R_y} \left(1 - \frac{s}{2\ell}\right) s \ell$$

where:

α_S : Coefficient to be taken equal to 0,9

β_b, β_s : Coefficients defined in Tab 4.

Table 4 : Coefficients β_b and β_s

Brackets at ends	Bracket lengths	β_b	β_s
0	–	1	1
1	ℓ_b	$\left(1 - \frac{\ell_b}{2\ell}\right)^2$	$1 - \frac{\ell_b}{2\ell}$
2	ℓ_{b1} ; ℓ_{b2}	$\left(1 - \frac{\ell_{b1}}{2\ell} - \frac{\ell_{b2}}{2\ell}\right)^2$	$1 - \frac{\ell_{b1}}{2\ell} - \frac{\ell_{b2}}{2\ell}$
Note 1: The bracket length ℓ_b is defined in Ch 1, Sec 3. ℓ_{b1} and ℓ_{b2} are the lengths of the two brackets fitted at each end.			

3.4.3 Single span vertical ordinary stiffeners subjected to lateral pressure

The net section modulus w, in cm³, and the net shear sectional area A_{Sh}, in cm², of vertical ordinary stiffeners subjected to lateral pressure are to be not less than the values obtained from the following formulae:

$$w = \gamma_R \gamma_m \lambda_b \beta_b \frac{\gamma_{S2} p_S + \gamma_{W2} p_W}{m R_y} \left(1 - \frac{s}{2\ell}\right) s \ell^2 10^3$$

$$A_{Sh} = 10 \gamma_R \gamma_m \lambda_s \beta_s \frac{\gamma_{S2} p_S + \gamma_{W2} p_W}{R_y} \left(1 - \frac{s}{2\ell}\right) s \ell$$

where:

β_b, β_s : Coefficients defined in Tab 4

λ_b : Coefficient taken equal to the greater of the following values:

$$\lambda_b = 1 + 0{,}2 \frac{\gamma_{S2}(p_{Sd} - p_{Su}) + \gamma_{W2}(p_{Wd} - p_{Wu})}{\gamma_{S2}(p_{Sd} + p_{Su}) + \gamma_{W2}(p_{Wd} + p_{Wu})}$$

$$\lambda_b = 1 - 0{,}2 \frac{\gamma_{S2}(p_{Sd} - p_{Su}) + \gamma_{W2}(p_{Wd} - p_{Wu})}{\gamma_{S2}(p_{Sd} + p_{Su}) + \gamma_{W2}(p_{Wd} + p_{Wu})}$$

λ_s : Coefficient taken equal to the greater of the following values:

$$\lambda_s = 1 + 0,4\frac{\gamma_{S2}(p_{Sd} - p_{Su}) + \gamma_{W2}(p_{Wd} - p_{Wu})}{\gamma_{S2}(p_{Sd} + p_{Su}) + \gamma_{W2}(p_{Wd} + p_{Wu})}$$

$$\lambda_s = 1 - 0,4\frac{\gamma_{S2}(p_{Sd} - p_{Su}) + \gamma_{W2}(p_{Wd} - p_{Wu})}{\gamma_{S2}(p_{Sd} + p_{Su}) + \gamma_{W2}(p_{Wd} + p_{Wu})}$$

p_{Sd} : Still water pressure, in kN/m², at the lower end of the ordinary stiffener considered

p_{Su} : Still water pressure, in kN/m², at the upper end of the ordinary stiffener considered

p_{Wd} : Wave pressure, in kN/m², at the lower end of the ordinary stiffener considered

p_{Wu} : Wave pressure, in kN/m², at the upper end of the ordinary stiffener considered.

3.4.4 Multispan ordinary stiffeners

The maximum normal stress σ and shear stress τ in a multispan ordinary stiffener are to be determined by a direct calculation taking into account:

- the distribution of still water and wave pressure and forces, to be determined on the basis of the criteria specified in Ch 1, Sec 5
- the number and position of intermediate supports (decks, girders, etc.)
- the condition of fixity at the ends of the stiffener and at intermediate supports
- the geometrical characteristics of the stiffener on the intermediate spans.

The maximum normal stress σ and shear stress τ in a multispan ordinary stiffener are to comply with the following formulae:

$$\frac{R_y}{\gamma_R\gamma_m} \geq \sigma$$

$$0,5\frac{R_y}{\gamma_R\gamma_m} \geq \tau$$

3.5 Net section modulus and net shear sectional area of ordinary stiffeners in flooding conditions

3.5.1 Groups of equal ordinary stiffeners

Where a group of equal ordinary stiffeners is fitted, it is acceptable that the minimum net section modulus given in [3.5.2] to [3.5.4] is calculated as the average of the values required for all the stiffeners of the same group, but this average is to be taken not less than 90% of the maximum required value.

The same applies for the minimum net shear sectional area.

3.5.2 Single span longitudinal and transverse ordinary stiffeners

The net section modulus w, in cm³, and the net shear sectional area A_{Sh}, in cm², of longitudinal or transverse ordinary stiffeners are to be not less than the values obtained from the following formulae:

$$w = \gamma_R\gamma_m\beta_b\frac{\gamma_{S2}p_{SF} + \gamma_{W2}p_{WF}}{m(R_y - \gamma_R\gamma_m\alpha_S\sigma_{X1})}\left(1 - \frac{s}{2\ell}\right)s\ell^2 10^3$$

$$A_{Sh} = 10\gamma_R\gamma_m\beta_s\frac{\gamma_{S2}p_{SF} + \gamma_{W2}p_{WF}}{R_y}\left(1 - \frac{s}{2\ell}\right)s\ell$$

where:

α_S : Coefficient to be taken equal to 0,9

β_b, β_s : Coefficients defined in Tab 4.

3.5.3 Single span vertical ordinary stiffeners

The net section modulus w, in cm³, and the net shear sectional area A_{Sh}, in cm², of vertical ordinary stiffeners are to be not less than the values obtained from the following formulae:

$$w = \gamma_R\gamma_m\lambda_b\beta_b\frac{\gamma_{S2}p_{SF} + \gamma_{W2}p_{WF}}{12R_y}\left(1 - \frac{s}{2\ell}\right)s\ell^2 10^3$$

$$A_{Sh} = 10\gamma_R\gamma_m\lambda_s\beta_s\frac{\gamma_{S2}p_{SF} + \gamma_{W2}p_{WF}}{R_y}\left(1 - \frac{s}{2\ell}\right)s\ell$$

where:

β_b, β_s : Coefficients defined in Tab 4

λ_b : Coefficient taken equal to the greater of the following values:

$$\lambda_b = 1 + 0,2\frac{\gamma_{S2}(p_{SFd} - p_{SFu}) + \gamma_{W2}(p_{WFd} - p_{WFu})}{\gamma_{S2}(p_{SFd} + p_{SFu}) + \gamma_{W2}(p_{WFd} + p_{WFu})}$$

$$\lambda_b = 1 - 0,2\frac{\gamma_{S2}(p_{SFd} - p_{SFu}) + \gamma_{W2}(p_{WFd} - p_{WFu})}{\gamma_{S2}(p_{SFd} + p_{SFu}) + \gamma_{W2}(p_{WFd} + p_{WFu})}$$

λ_s : Coefficient taken equal to the greater of the following values:

$$\lambda_s = 1 + 0,4\frac{\gamma_{S2}(p_{SFd} - p_{SFu}) + \gamma_{W2}(p_{WFd} - p_{WFu})}{\gamma_{S2}(p_{SFd} + p_{SFu}) + \gamma_{W2}(p_{WFd} + p_{WFu})}$$

$$\lambda_s = 1 - 0,4\frac{\gamma_{S2}(p_{SFd} - p_{SFu}) + \gamma_{W2}(p_{WFd} - p_{WFu})}{\gamma_{S2}(p_{SFd} + p_{SFu}) + \gamma_{W2}(p_{WFd} + p_{WFu})}$$

p_{SFd} : Still water pressure, in kN/m², in flooding conditions, at the lower end of the ordinary stiffener considered (see Ch 1, Sec 5, [6.6])

p_{SFu} : Still water pressure, in kN/m², in flooding conditions, at the upper end of the ordinary stiffener considered (see Ch 1, Sec 5, [6.6])

p_{WFd} : Wave pressure, in kN/m², in flooding conditions, at the lower end of the ordinary stiffener considered (see Ch 1, Sec 5, [6.6])

p_{WFu} : Wave pressure, in kN/m², in flooding conditions, at the upper end of the ordinary stiffener considered (see Ch 1, Sec 5, [6.6]).

3.5.4 Multispan ordinary stiffeners

The maximum normal stress σ and shear stress τ in a multispan ordinary stiffener in flooding conditions are to be determined by a direct calculation taking into account:

- the distribution of still water and wave pressure and forces in flooding conditions, to be determined on the basis of the criteria specified in Ch 1, Sec 5
- the number and position of intermediate supports (decks, girders, etc.)
- the condition of fixity at the ends of the stiffener and at intermediate supports
- the geometrical characteristics of the stiffener on the intermediate spans.

The maximum normal stress σ and shear stress τ in a multispan ordinary stiffener are to comply with the following formulae:

$$\frac{R_y}{\gamma_R\gamma_m} \geq \sigma$$

$$0,5\frac{R_y}{\gamma_R\gamma_m} \geq \tau$$

3.6 Net section modulus and net shear sectional area of ordinary stiffeners in testing conditions

3.6.1 Groups of equal ordinary stiffeners

Where a group of equal ordinary stiffeners is fitted, it is acceptable that the minimum net section modulus in [3.6.2]] to [3.6.4] is calculated as the average of the values required for all the stiffeners of the same group, but this average is to be taken not less than 90% of the maximum required value.

The same applies for the minimum net shear sectional area.

3.6.2 Single span longitudinal and transverse ordinary stiffeners

The net section modulus w, in cm³, and the net shear sectional area A_{Sh}, in cm², of longitudinal or transverse ordinary stiffeners are to be not less than the values obtained from the following formulae:

$$w = \gamma_R\gamma_m\beta_b\frac{\gamma_{S2}p_T}{mR_y}\left(1 - \frac{s}{2\ell}\right)s\ell^2 10^3$$

$$A_{Sh} = \gamma_R\gamma_m\beta_s\frac{\gamma_{S2}p_T}{R_y}\left(1 - \frac{s}{2\ell}\right)s\ell$$

where:

β_b, β_s : Coefficients defined in [3.4.2].

3.6.3 Single span vertical ordinary stiffeners

The net section modulus w, in cm³, and the net shear sectional area A_{Sh}, in cm², of vertical ordinary stiffeners are to be not less than the values obtained from the following formulae:

$$w = \gamma_R\gamma_m\gamma_b\beta_b\frac{\gamma_{S2}p_T}{mR_y}\left(1 - \frac{s}{2\ell}\right)s\ell^2 10^3$$

$$A_{Sh} = 10\gamma_R\gamma_m\gamma_s\beta_s\frac{\gamma_{S2}p_T}{R_y}\left(1 - \frac{s}{2\ell}\right)s\ell$$

where:

β_b, β_s : Coefficients defined in [3.4.2]

λ_b : Coefficient taken equal to the greater of the following values:

$$\lambda_b = 1 + 0{,}2\frac{p_{Td} - p_{Tu}}{p_{Td} + p_{Tu}}$$

$$\lambda_b = 1 - 0{,}2\frac{p_{Td} - p_{Tu}}{p_{Td} + p_{Tu}}$$

λ_s : Coefficient taken equal to the greater of the following values:

$$\lambda_b = 1 + 0{,}4\frac{p_{Td} - p_{Tu}}{p_{Td} + p_{Tu}}$$

$$\lambda_b = 1 - 0{,}4\frac{p_{Td} - p_{Tu}}{p_{Td} + p_{Tu}}$$

p_{Td} : Still water pressure, in kN/m², in testing conditions, at the lower end of the ordinary stiffener considered

p_{Tu} : Still water pressure, in kN/m², in testing conditions, at the upper end of the ordinary stiffener considered.

3.6.4 Multispan ordinary stiffeners

The maximum normal stress σ and shear stress τ in a multispan ordinary stiffener in testing conditions are to be determined by a direct calculation taking into account:

- the distribution of still water and forces in testing conditions, to be determined on the basis of the criteria specified in Ch 1, Sec 5
- the number and position of intermediate supports (decks, girders, etc.)
- the condition of fixity at the ends of the stiffener and at intermediate supports
- the geometrical characteristics of the stiffener on the intermediate spans.

The maximum normal stress σ and shear stress τ in a multispan ordinary stiffener are to comply with the following formulae:

$$\frac{R_y}{\gamma_R \gamma_m} \geq \sigma$$

$$0{,}5\frac{R_y}{\gamma_R \gamma_m} \geq \tau$$

3.7 Net section modulus and net shear sectional area of ordinary stiffeners subject to impact loads

3.7.1 Single span longitudinal, transverse and vertical ordinary stiffeners

Unless otherwise specified, the net plastic section modulus Z_{pl}, in cm₃, as defined in Ch 1, Sec 3, [5.4.2] and the net web thickness t_w, in mm, of stiffeners subject to impact generated by fluids are to be not less than the values obtained from the following formulae:

$$Z_{pl} = \frac{P_l}{0{,}9(n+2)4R_{eH}} s\ell^2 10^3$$

$$t_w = \frac{\sqrt{3}}{2}\frac{P_l}{(h_w + t_p)R_{eH}} s\ell 10^3$$

where:

n : Number of fixed ends of stiffener:
- n = 2 for continuous members or members with brackets fitted at both ends
- n = 1 for one end equivalent to built-in and the other end simply supported
- n = 0 for both ends with low end fixity

P_l : Any impact pressure defined in the Rules, including:
- bottom impact pressure, as defined in Ch 1, Sec 11, [3.4]
- bow impact pressure, as defined in Ch 1, Sec 11, [4.3]
- dynamic impact pressure, as defined in Ch 1, Sec 5, [6.4.3]

t_p : Net thickness, in mm, of the attached plating.

If deemed necessary by the Society and depending on specific natures of loadings, different calculation methods may be applied, on a case-by-case basis.

4 Buckling check

4.1 General

4.1.1 The prescriptive buckling check of ordinary stiffeners is to be performed in accordance with NR615 Buckling Assessment of Plated Structures.

4.1.2 The load model for prescriptive buckling check is given in [4.2].

4.1.3 The prescriptive buckling check criterion is given in [4.3].

4.2 Load model

4.2.1 Hull girder compression normal stresses

The hull girder compression normal stresses σ_{X1} , in N/mm², to be considered for the prescriptive buckling check of ordinary stiffeners are obtained from the following formula:

$\sigma_{X1} = \gamma_{S1}\ \sigma_{S1} + \gamma_{W1}\ (C_{FV}\ \sigma_{WV1} + C_{FH}\ \sigma_{WH})$

where:

σ_{S1}, σ_{WV1}, σ_{WH} : Hull girder normal stresses, in N/mm², defined in Tab 5

C_{FV} , C_{FH} : Combination factors defined in Tab 3.

For longitudinal stiffeners, σ_{X1} is to be taken as the maximum compression stress on the stiffener considered.

The hull girder bending stress σ_{hg} , as defined in NR615, Sec 5, [2.3.4], is to be taken as follows:

- $\sigma_{hg} = \sigma_{X1}$ for intact and flooding conditions
- $\sigma_{hg} = 0$ for testing condition.

4.2.2 Lateral pressure

The lateral pressure P, as defined in NR615, Sec 5, [2.3.4], is to be taken according to [3.3] for the intact, flooding and testing conditions.

Table 5 : Hull girder normal compression stresses for buckling check

Condition	σ_{S1} in N/mm²	σ_{WV1} in N/mm²	σ_{WH} in N/mm²
$z \geq N$	$\frac{M_{SW,S}}{I_Y}(z-N)10^{-3}$	$\frac{M_{WV,S}}{I_Y}(z-N)10^{-3}$	$-\left\lvert\frac{M_{WH}}{I_Z}y\right\rvert 10^{-3}$
$z < N$	$\frac{M_{SW,H}}{I_Y}(z-N)10^{-3}$	$\frac{M_{WV,H}}{I_Y}(z-N)10^{-3}$	

4.3 Buckling check criteria

4.3.1 The buckling strength of ordinary stiffeners is to satisfy the following criterion for intact, flooding and testing conditions:

$\eta_{Stiffener} \leq \eta_{ALL}$ with: $\eta_{ALL} = 1$

where:

$\eta_{Stiffener}$: Utilisation factor as defined in NR615, Sec 3, [3.3].

Section 9 Scantling of Primary Supporting Members

Symbols

M_{SW} : Still water bending moment, in KN.m, as defined in Ch 1, Sec 5, [2.2]:
- in hogging condition: $M_{SW} = M_{SW,H}$
- in sagging condition: $M_{SW} = M_{SW,S}$

$M_{SW,H}$: Still water bending moment, in KN.m, in hogging condition

$M_{SW,S}$: Still water bending moment, in KN.m, in sagging condition

M_{WV} : Vertical wave bending moment, in KN.m as defined in Ch 1, Sec 5, [3.3]:
- in hogging condition: $M_{WV} = M_{WV,H}$
- in sagging condition: $M_{WV} = M_{WV,S}$

$M_{WV,H}$: Vertical wave bending moment, in kN.m, in hogging condition, at the hull transverse section considered, defined in Ch 1, Sec 5, [3.3]

$M_{WV,S}$: Vertical wave bending moment, in kN.m, in sagging condition, at the hull transverse section considered, defined in Ch 1, Sec 5, [3.3]

Q_{SW} : Still water shear force, in KN.m, as defined in Ch 1, Sec 5, [2.3]

Q_{WV} : Vertical wave shear force, in kN.m, as defined in Ch 1, Sec 5, [3.3.3]

R_{eH} : Specified minimum yield stress, in N/mm^2, of the material

R_m : Specified minimum tensile strength, in N/mm^2, of the material.

1 Application

1.1 VeriSTAR- Hull

1.1.1 All units covered by the present Chapter are to be granted the additional service feature **VeriSTAR-Hull** (as stated in Ch 1, Sec 1, [1.2.4], and are to comply with the requirements of the present Ch 1, Sec 9.

1.2 VeriSTAR- Hull FLM

1.2.1 In addition, units intended to receive the additional notation **VeriSTAR-Hull FLM**, as defined in Ch 1, Sec 1, [1.2.5] are to comply with the requirements of NR551 “Structural Analysis of Offshore Surface Units through Full Length Finite Elements Models”.

2 General

2.1 Principles

2.1.1 The scantling of primary supporting members is to be calculated according to the present section.

2.1.2 The requirements of the present Section cover the assessment of primary supporting members for the transit and site conditions of the unit, except when otherwise specified.

The scantlings are to be evaluated independently for transit and site conditions.

2.2 Net thickness

2.2.1 The net thickness of plating which forms the webs and flanges of primary supporting members are to be checked in accordance with Ch 1, Sec 7.

2.2.2 Minimum net thickness

The net thickness of plating which forms the webs of primary supporting members is to be not less than the value obtained, in mm, from the following formulae:

$t_{MIN} = 3,7 + 0,015\ L\ k^{1/2}$ for $L < 120$ m

$t_{MIN} = 3,7 + 1,8\ k^{1/2}$ for $L \geq 120$ m

In addition, the net thickness is to be not less than the values given, respectively in:
- Tab 1 for plating which forms the webs of primary supporting members of the double bottom
- Tab 2 for plating which forms the webs of primary supporting members of the single bottom.

Table 1 : Minimum net thicknesses of webs of double bottom primary supporting members

Primary supporting member	Minimum net thickness, in mm	
	Area within 0,4L amidships	Area outside 0,4L amidships
Centre girder	$2,0\ L^{1/3}\ k^{1/6}$	$1,7\ L^{1/3}\ k^{1/6}$
Side girders	$1,4\ L^{1/3}\ k^{1/6}$	$1,4\ L^{1/3}\ k^{1/6}$
Floors	$1,5\ L^{1/3}\ k^{1/6}$	$1,5\ L^{1/3}\ k^{1/6}$
Girder bounding a duct keel **(1)**	$1,5 + 0,8\ L^{1/2}\ k^{1/4}$	$1,5 + 0,8\ L^{1/2}\ k^{1/4}$
Margin plate	$L^{1/2}\ k^{1/4}$	$0,9\ L^{1/2}\ k^{1/4}$
(1) The minimum net thickness is to be taken not less than that required for the centre girder.		

Table 2 : Minimum net thicknesses of webs and flanges of single bottom primary supporting members

Primary supporting member	Minimum net thickness, in mm	
	Area within 0,4L amidships	Area outside 0,4L amidships
Centre girder	$6,0 + 0,05\ L_2\ k^{1/2}$	$4,5 + 0,05\ L_2\ k^{1/2}$
Floors and side girders	$5,0 + 0,05\ L_2\ k^{1/2}$	$3,5 + 0,05\ L_2\ k^{1/2}$

2.3 Deck primary members in way of launching appliances used for survival craft or rescue boat

2.3.1 The scantlings of deck primary supporting members are to be determined by direct calculations.

2.3.2 The loads exerted by launching appliance are to correspond to the SWL of the launching appliance.

2.3.3 The combined stress, in N/mm², is not to exceed the smaller of $R_{eH}/2,2$ and $R_m/4,5$.

2.4 Finite element model

2.4.1 For the checking of the scantlings of primary supporting members, a three-dimensional finite element model is required.

The check is to be made in accordance with the present Section.

In addition, design mooring loads and appurtenances design loads defined in Ch 1, Sec 14, [1] and Ch 1, Sec 14, [2] are to be considered in the model for the verification of the Ship area.

2.4.2 Number of models

Each typical cargo tank is to be subject to finite element calculation.

At least three cargo tanks are to be assessed:

- the cargo oil tank at midship (midship model)
- the forward cargo tank (fore model)
- the afterward cargo tank (aft model).

2.5 Partial safety factors

2.5.1 The partial safety factors to be considered for the checking of the scantlings of the primary supporting members are specified in Tab 3 and Tab 4.

Table 3 : Resistance partial safety factor

Type of three dimensional model	Resistance partial safety factor γ_R	
	General	Watertight bulkhead, primary supporting members
Coarse mesh finite element model	1,15	1,02
Standard mesh finite element model	1,02	1,02
Fine mesh finite element model	1,02	1,02

Table 4 : Primary supporting members analysed through three dimensional models – Partial safety factors

Partial safety factors covering uncertainties regarding:	Symbol	Yielding check		Buckling check
		General	Watertight bulkhead primary supporting members **(1)**	Plate panels
Still water hull girder loads	γ_{S1}	1,00	1,00	1,00
Wave hull girder loads	γ_{W1}	1,02	1,02	1,02
Still water pressure	γ_{S2}	1,00	1,00	1,00
Wave pressure	γ_{W2}	1,07	1,07	1,07
Material	γ_m	1,02	1,02	N.A.
Resistance	γ_R	defined in Tab 3	defined in Tab 3	N.A.

(1) Applies also to primary supporting members of bulkheads or inner side which constitute boundary of compartments not intended to carry liquids.

Note 1: For primary supporting members of the collision bulkhead, γ_R = 1,25.

2.6 Slenderness requirement

2.6.1 Structural members are to comply with slenderness and proportion requirements of NR615 Buckling Assessment of Plated Structures.

3 Structural modelling

3.1 Model construction

3.1.1 Elements

The structural model is to represent the primary supporting members with the plating to which they are connected.

Ordinary stiffeners are also to be represented in the model in order to reproduce the stiffness and inertia of the actual hull girder structure. The way ordinary stiffeners are represented in the model depends on the mesh size, as defined in [3.5].

3.1.2 Net scantlings

All the elements in [3.1.1] are to be modelled with their net scantlings according to Ch 1, Sec 3, [7]. Therefore, also the hull girder stiffness and inertia to be reproduced by the model are those obtained by considering the net scantlings of the hull structures.

3.2 Model extension

3.2.1 The longitudinal extension of the structural model is to be such that:

- the hull girder stresses in the area to be analysed are properly taken into account in the structural analysis
- the results in the areas to be analysed are not influenced by the unavoidable inaccuracy in the modelling of the boundary conditions.

3.2.2 In general, the conditions in [3.2.1] are considered as being satisfied when the model is extended over at least three cargo tank lengths.

For the analysis of the midship area, this model is to be such that its aft end corresponds to the first transverse bulkhead aft of the midship, as shown in Fig 1. The structure of the fore and aft transverse bulkheads located within the model, including the bulkhead plating, is to be modelled.

Fore and aft models are to extend respectively to the collision bulkhead and the aft peak bulkhead.

3.2.3 In the case of structural symmetry with respect to the unit's centreline longitudinal plane, the hull structures may be modelled over half the unit's breadth.

Figure 1 : Model longitudinal extension

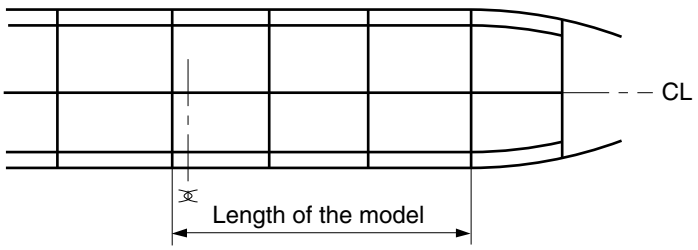

3.3 Boundary conditions

3.3.1 Structural model extended over at least three cargo tank lengths

The whole three-dimensional model is assumed to be fixed at one end, while shear forces and bending moments are applied at the other end to ensure equilibrium (see Article [4]).

At the free end section, rigid constraint conditions are to be applied to all nodes located on longitudinal members, in such a way that the transverse section remains plane after deformation.

When the hull structure is modelled over half the unit's breadth (see [3.2.3]), in way of the unit's centreline longitudinal plane, symmetry or anti-symmetry boundary conditions as specified in Tab 5 are to be applied, depending on the loads applied to the model (symmetrical or anti-symmetrical, respectively).

Table 5 : Symmetry and anti-symmetry conditions in way of the unit's centreline longitudinal plane

Boundary conditions	DISPLACEMENTS in directions **(1)**		
	X	Y	Z
Symmetry	free	fixed	free
Anti-symmetry	fixed	free	fixed

Boundary conditions	ROTATION around axes **(1)**		
	X	Y	Z
Symmetry	fixed	free	fixed
Anti-symmetry	free	fixed	free
(1) X, Y and Z directions and axes are defined with respect to the reference co-ordinate system in Ch 1, Sec 1, [3.3].			

3.4 Finite element modelling criteria

3.4.1 Modelling of primary supporting members

The analysis of primary supporting members based on standard mesh models, as defined in [3.5.3], is to be carried out by applying one of the following procedures (see Fig 2), depending on the computer resources:

- an analysis of the whole three-dimensional model based on a standard mesh
- an analysis of the whole three-dimensional model based on a coarse mesh, as defined in [3.5.2], from which the nodal displacements or forces are obtained to be used as boundary conditions for analyses based on fine mesh models of primary supporting members, e.g.:
  - transverse rings
  - double bottom girders
  - side girders
  - deck girders
  - primary supporting members of transverse bulkheads
  - primary supporting members which appear from the analysis of the whole model to be highly stressed.

3.4.2 Modelling of the most highly stressed areas

The areas which appear from the analyses based on standard mesh models to be highly stressed may be required to be further analysed, using the mesh accuracy specified in [3.5.4].

3.5 Finite element models

3.5.1 General

Finite element models are generally to be based on linear assumptions. The mesh is to be executed using membrane or shell elements, with or without mid-side nodes.

Meshing is to be carried out following uniformity criteria among the different elements.

Most of quadrilateral elements are to be such that the ratio between the longer side length and the shorter side length does not exceed 2. Some of them may have a ratio not exceeding 4. Their angles are to be greater than 60° and less than 120°. The triangular element angles are to be greater than 30° and less than 120°.

Further modelling criteria depend on the accuracy level of the mesh, as specified in [3.5.2] to [3.5.4].

Figure 2 : Finite element modelling criteria

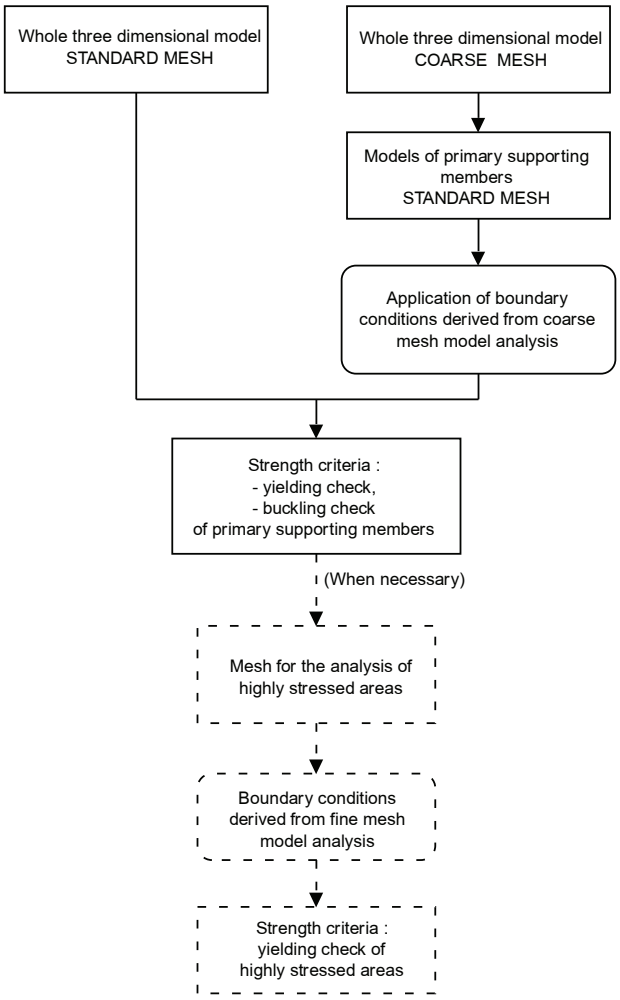

3.5.2 Coarse mech

The number of nodes and elements is to be such that the stiffness and inertia of the model properly represent those of the actual hull girder structure, and the distribution of loads among the various load carrying members is correctly taken into account.

To this end, the structural model is to be built on the basis of the following criteria:

- ordinary stiffeners contributing to the hull girder longitudinal strength and which are not individually represented in the model are to be modelled by rod elements and grouped at regular intervals
- webs of primary supporting members may be modelled with only one element on their height
- face plates may be simulated with bars having the same cross-section
- the plating between two primary supporting members may be modelled with one element strip
- holes for the passage of ordinary stiffeners or small pipes may be disregarded
- manholes (and similar discontinuities) in the webs of primary supporting members may be disregarded, but the element thickness is to be reduced in proportion to the hole height and the web height ratio.

In some specific cases, some of the above simplifications may not be deemed acceptable by the Society in relation to the type of structural model and the analysis performed.

In case of an analysis based on coarse mesh model, the following standard mesh models are to be made:

- transverse rings
- primary supporting members supporting the transverse bulkheads
- bottom and deck girders.

3.5.3 Standard mesh

The unit's structure may be considered as standard meshed when each longitudinal ordinary stiffener is modelled; as a consequence, the standard size of finite elements used is based on the spacing of ordinary stiffeners.

The structural model is to be built on the basis of the following criteria:

- webs of primary members are to be modelled with at least three elements on their height
- the plating between two primary supporting members is to be modelled with at least two element strips
- the ratio between the longer side and the shorter side of elements is to be less than 3 in the areas expected to be highly stressed
- holes for the passage of ordinary stiffeners may be disregarded.

In some specific cases, some of the above simplifications may not be deemed acceptable by the Society in relation to the type of structural model and the analysis performed.

3.5.4 Fine mesh models

Evaluation of detailed stresses requires the use of fine mesh in way of areas of high stress (see [5.2] and [5.3]). The fine mesh analysis may be performed on separate finite element models, having boundary conditions obtained from the standard mesh model. As an alternative, fine mesh zones incorporated in the standard mesh model may be used.

The extent of fine mesh zone is not to be less than the relevant spacing of ordinary stiffeners in the considered structural region, in all directions from the area under investigation. When separate models are used, the extent is to be such that the calculated stresses within the investigated area are not significantly affected by the imposed boundary conditions and application of loads.

The elements inside the fine mesh zones are to be modelled based on net scantlings, as defined in Ch 1, Sec 3, [7].

All platings inside the fine mesh zone are to be represented by shell elements having dimensions not above 100 mm x 100 mm. Element aspect ratio is to be as close to 1 as possible, and not to exceed 3. Element's corner angles are to be greater than 60° and less than 120°. Triangular elements and elements having dimensions less than their thickness are to be avoided.

Face plates of primary supporting members or openings are to be modelled with shell elements within the fine mesh zone.

4 Load model

4.1 Loading conditions

4.1.1 The design on-site loading conditions specified in Fig 3 and Fig 4 as relevant, are to be considered in the analysis of primary supporting members in cargo and ballast tanks.

In addition, the still water and wave loads are to be calculated for the most severe loading conditions as given in the loading manual, with a view to maximizing the stresses in the longitudinal structure and primary supporting members.

When some of the on-site loading conditions shown in Fig 3 and Fig 4 are not included in the loading manual, and in particular, the alternate and the non-symmetrical load cases, it must be indicated on the midship section drawing as well as in the loading manual, that these cases are not allowed. In addition, it should be demonstrated that these cases will never happen during the life of the unit, in particular in case of accidental conditions.

When the conditions shown in Fig 3 and Fig 4 are foreseen in the loading manual, the analysis is to be carried out, taking into account the associated draughts as specified in the table, and not the draughts as given in the loading manual.

The filling of ballast tanks as indicated in Fig 3 and Fig 4 is given as default value and may be changed if available loading information indicates otherwise.

The loads of the topside facilities are to be added, in static conditions, to represent the light weight of the unit, as well as the weight of the external structures (riser supports, etc.). For fore and aft models, the loading patterns are to be adjusted considering the capacity plan of the unit in the studied area. The loading conditions selected cases are to maximize internal pressure applied on watertight bulkheads, local shear stress at bulkheads location and torsion on the hull.

4.2 Local loads

4.2.1 The local loads to be taken into account are given in Ch 1, Sec 5.

The loads induced by the topside on deck are to be taken into account.

4.3 Hull girder loads

4.3.1 The hull girder loads to be taken into account are given in:

- Tab 6 and Tab 7 for the midship model
- Tab 8 and Tab 9 for the fore and aft models

Note 1: For fore and aft peak analysis, see Ch 1, Sec 11, [2.1.2] and Ch 1, Sec 12, [2.1.2] respectively.

Figure 3 : Loading conditions for units fitted with one central longitudinal bulkhead for on-site condition

Loading conditions at maximum draught T

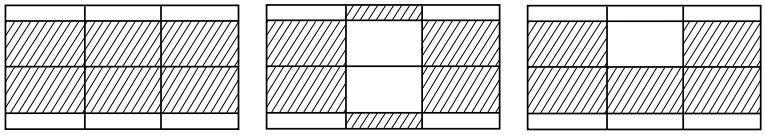

Loading condition at draught 0,9T

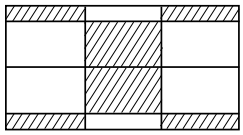

Loading conditions at minimum draught T_{mini}

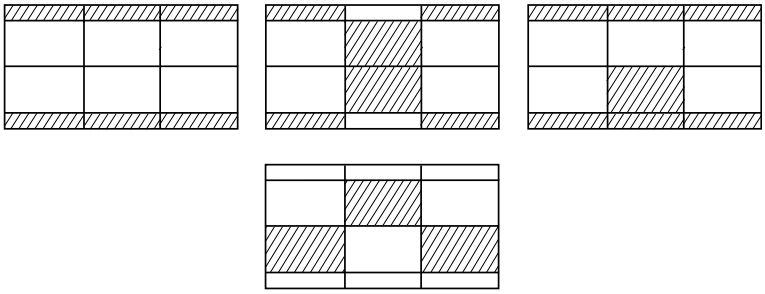

Loading condition at draught 0,75T

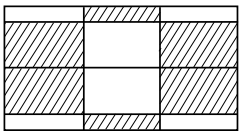

Figure 4 : Loading conditions for units fitted with two central longitudinal bulkhead for on-site condition

Loading conditions at maximum draught T

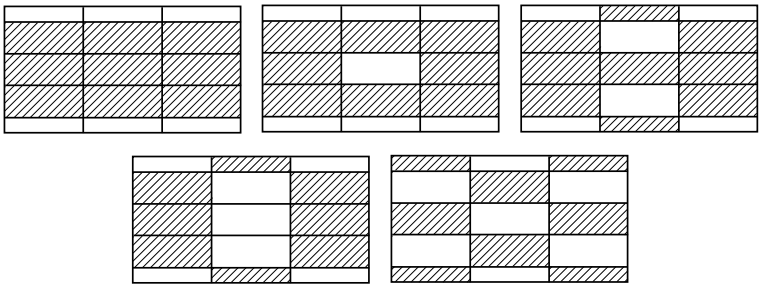

Loading conditions at minimum draught T_{mini}

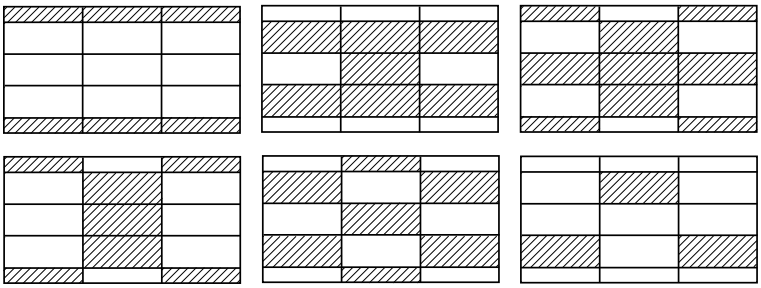

Loading conditions at draught 0,75T

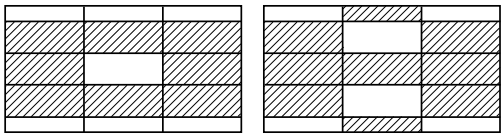

Table 6 : Midship model - Maximal bending moments at the middle of the central tank

Ship condition	Load case	Vertical bending moments at the middle of the central tank/hold		Horizontal wave bending moment at the middle of the central tank/hold	Vertical shear forces at the middle of the central tank/hold	
		Still water	Wave		Still water	Wave
Upright	"a" crest	$\gamma_{S1} M_{SW}$	$\gamma_{W1} M_{WV,H}$	0	0	0
	"a" trough	$\gamma_{S1} M_{SW}$	$\gamma_{W1} M_{WV,S}$	0	0	0
	"b"	$\gamma_{S1} M_{SW}$	$0,7\ \gamma_{W1} M_{WV,S}$	0	0	0
Inclined	"c"	$\gamma_{S1} M_{SW}$**(1)**	$0,4\ \gamma_{W1} M_{WV}$**(2)**	$\gamma_{W1} M_{WH}$	0	0
	"d"	$\gamma_{S1} M_{SW}$**(1)**	$0,25\ \gamma_{W1} M_{WV}$**(2)**	$0,7\ \gamma_{W1} M_{WH}$	0	0

Note 1: Hull girder loads are to be calculated at the middle of the central tank/hold.
(1) M_{SW} is to be taken equal to $M_{SW,H}$ or to $M_{SW,S}$ depending on the loading condition.
(2) M_{WV} is to be taken equal to $M_{WV,H}$ or to $M_{WV,S}$ depending on the loading condition.

Table 7 : Midship model - Maximal shear forces in way of the aft bulkhead of the central tank

Ship condition	Load case	Vertical bending moments in way of the aft bulkhead of the central tank/hold		Vertical shear forces in way of the aft bulkhead of the central tank/hold	
		Still water	Wave	Still water	Wave
Upright	"a" crest	$\gamma_{S1} M_{SW}$**(1)**	$0,4\ \gamma_{W1} M_{WV,H}$	$\gamma_{S1} Q_{SW}$	$\gamma_{W1} Q_{WV}$
	"a" trough	$\gamma_{S1} M_{SW}$**(1)**	$0,4\ \gamma_{W1} M_{WV,S}$	$\gamma_{S1} Q_{SW}$	$\gamma_{W1} Q_{WV}$
	"b"	$\gamma_{S1} M_{SW}$**(1)**	$0,4\ \gamma_{W1} M_{WV,S}$	$\gamma_{S1} Q_{SW}$	$0,7\ \gamma_{W1} Q_{WV}$

Note 1: Hull girder loads are to be calculated in way of the aft bulkhead of the central tank.
(1) M_{SW} may be taken from the loading manual among the relevant loading conditions in order to maximize the shear forces.

Table 8 : Fore / aft model - Maximal bending moments

Ship condition	Load case	Vertical bending moments		Horizontal wave bending moment	Vertical shear forces	
		Still water	Wave		Still water	Wave
Upright	"a" crest	$\gamma_{S1} M_{SW}$	$\gamma_{W1} M_{WV,H}$	0	$\gamma_{S1} Q_{SW}$**(3)**	$\gamma_{W1} Q_{WV}$
	"a" trough	$\gamma_{S1} M_{SW}$	$\gamma_{W1} M_{WV,S}$	0	$\gamma_{S1} Q_{SW}$**(3)**	$\gamma_{W1} Q_{WV}$
	"b"	$\gamma_{S1} M_{SW}$	$0,7\ \gamma_{W1} M_{WV,S}$	0	$\gamma_{S1} Q_{SW}$**(3)**	$0,7\ \gamma_{W1} Q_{WV}$
Inclined	"c"	$\gamma_{S1} M_{SW}$**(1)**	$0,4\ \gamma_{W1} M_{WV}$**(2)**	$\gamma_{W1} M_{WH}$	$\gamma_{S1} Q_{SW}$**(3)**	$0,4\ \gamma_{W1} Q_{WV}$
	"d"	$\gamma_{S1} M_{SW}$**(1)**	$0,25\ \gamma_{W1} M_{WV}$**(2)**	$0,7\ \gamma_{W1} M_{WH}$	$\gamma_{S1} Q_{SW}$**(3)**	$0,25\ \gamma_{W1} Q_{WV}$

Note 1: Hull girder loads are to be calculated at the middle of studied region. Several studied region may be necessary in order to obtain the target hull girder loads over the length of the fore/aft model.
(1) M_{SW} is to be taken equal to $M_{SW,H}$ or to $M_{SW,S}$ depending on the loading condition.
(2) M_{WV} is to be taken equal to $M_{WV,H}$ or to $M_{WV,S}$ depending on the loading condition.
(3) Q_{SW} may be taken from the loading manual among the relevant loading conditions in order to maximize the bending moments.

Table 9 : Fore / aft model - Maximal shear forces

Ship condition	Load case	Vertical bending moments		Horizontal wave bending moment	Vertical shear forces	
		Still water	Wave		Still water	Wave
Upright	"a" crest	$\gamma_{S1} M_{SW}$**(3)**	$\gamma_{W1} M_{WV,H}$	0	$\gamma_{S1} Q_{SW}$	$\gamma_{W1} Q_{WV}$
	"a" trough	$\gamma_{S1} M_{SW}$**(3)**	$\gamma_{W1} M_{WV,S}$	0	$\gamma_{S1} Q_{SW}$	$\gamma_{W1} Q_{WV}$
	"b"	$\gamma_{S1} M_{SW}$**(3)**	$0,7\ \gamma_{W1} M_{WV,S}$	0	$\gamma_{S1} Q_{SW}$	$0,7\ \gamma_{W1} Q_{WV}$
Inclined	"c"	$\gamma_{S1} M_{SW}$**(1)(3)**	$0,4\ \gamma_{W1} M_{WV}$**(2)**	$\gamma_{W1} M_{WH}$	$\gamma_{S1} Q_{SW}$	$0,4\ \gamma_{W1} Q_{WV}$
	"d"	$\gamma_{S1} M_{SW}$**(1)(3)**	$0,25\ \gamma_{W1} M_{WV}$**(2)**	$0,7\ \gamma_{W1} M_{WH}$	$\gamma_{S1} Q_{SW}$	$0,25\ \gamma_{W1} Q_{WV}$

Note 1: Hull girder loads are to be calculated at the middle of studied region. Several studied region may be necessary in order to obtain the target hull girder loads over the length of the fore/aft model.
(1) M_{SW} is to be taken equal to $M_{SW,H}$ or to $M_{SW,S}$ depending on the loading condition.
(2) M_{WV} is to be taken equal to $M_{WV,H}$ or to $M_{WV,S}$ depending on the loading condition.
(3) M_{SW} may be taken from the loading manual among the relevant loading conditions in order to maximize the shear forces.

4.4 Load cases

4.4.1 The loading conditions are to be combined with the load cases with the relevant wave loads and sea pressures as defined in Ch 1, Sec 5.

The sea state's return period for transit and site conditions are defined in Ch 1, Sec 4, [1.1].

5 Yielding strength criteria

5.1 Master allowable stress

5.1.1 The master allowable stress, σ_{MASTER}, in N/mm², is defined by the criteria:

$$\sigma_{MASTER} = \frac{R_y}{\gamma_R \gamma_m}$$

k : Material factor as defined in Pt B, Ch 4, Sec 1, [2.2] of the Ships Rules

R_y : Minimum yield stress, in N/mm², of the material, to be taken as follows, unless otherwise specified:

$$\frac{235}{k}$$

5.2 Yielding criteria for coarse and standard mesh analysis

5.2.1 For coarse mesh analysis and standard mesh analysis, and for elements located in ship areas (as defined in Ch 1, Sec 3, [1]), it is to be checked that the equivalent stress σ_{VM}, in N/mm², calculated according to Article [6] is in compliance with the following criteria:

$\sigma_{VM} \leq \sigma_{MASTER}$

Areas where the equivalent stress σ_{VM} obtained through standard mesh analysis is above $0{,}95\sigma_{MASTER}$, are to be investigated through fine mesh analysis based on the requirements of [3.5.4] and the criteria given in [5.4.1] are to be checked. The Society may require additional fine mesh analyses for areas where the assessment through standard mesh models is not judged as satisfactory.

5.3 Yielding criteria for face plates of primary supporting members and openings

5.3.1 For standard mesh analysis, face plates of primary supporting members and openings may be modelled by shell elements or by beam/bar elements.

When shell elements are used, the requirements of [5.2] are to be complied with.

When beam/bar elements are used, it is to be checked that the beam/bar element's axial stress σ_{ax}, in N/mm², is in compliance with the following criteria:

$\sigma_{ax} \leq \sigma_{MASTER}$

Areas where the beam/bar element's axial stress σ_{ax} is above 0,95 σ_{MASTER}, are to be investigated through fine mesh analysis (with shell elements) based on the requirements of [3.5.4] and the criteria given in [5.4.1] are to be checked.

Note 1: Values of beam/bar element's axial stress are generally calculated by finite element software. The direct use of nodal stresses is to be avoided. When different values of beam element's axial stress are calculated for each extremity of the element, both extremity values are to be checked.

5.4 Yielding criteria for fine mesh analysis

5.4.1 For fine mesh analysis required in [5.2]and/or [5.3] and complying with the requirements of [3.5.4], the following criteria are to be checked:

a) Average area:

The average Von Mises equivalent stress $\sigma_{VM\text{-}av}$, as defined in [5.5], is to comply with the following criteria:

$\sigma_{VM-av} \leq \sigma_{MASTER}$

b) Isolated mesh:

The equivalent stress σ_{VM} of each (100 mm x 100 mm) element in the fine mesh region excluding the area of structural discontinuity, in N/mm², calculated according to Article [6] is to comply with the following criteria:

$\sigma_{VM} \leq \sigma_{MASTER}$

c) Hot spot:

The equivalent stress σ_{VM} of each (100 mm x 100 mm) element in the fine mesh region at the vicinity of the structural discontinuity, in N/mm², calculated according to Article [6], is to comply with the following criteria:

- for elements not adjacent to the weld: $\sigma_{VM} \leq 1{,}42\sigma_{MASTER}$
- for elements adjacent to the weld: $\sigma_{VM} \leq 1{,}3\sigma_{MASTER}$

In case of mesh finer than (100 mm x 100 mm), the equivalent stress σ_{VM} is to be obtained by averaging over an equivalent area of (100 mm x 100 mm), based on the methodology given in [5.5].

5.5 Stress averaging on fine mesh

5.5.1 For the purpose of the criteria given in [5.4.1], item a), the average Von Mises equivalent stress $\sigma_{VM\text{-}av}$ is to be calculated based on weighted average against element areas:

$$\sigma_{VM-av} = \frac{\sum_1^n \sigma_{VM-i} A_i}{\sum_1^n A_i}$$

where:

A_i : Area of the i-th element within the considered area, in mm²

n : Number of elements within the considered area

$\sigma_{VM\text{-}av}$: Average Von Mises equivalent stress, in N/mm²

$\sigma_{VM\text{-}i}$: Von Mises stress of the i-th element within the considered area, in N/mm²

Stress averaging is to be performed over an area defined as follows:

- the area considered for stress averaging is to have a size not above the relevant spacing of ordinary stiffeners (s x s)
- for fine mesh along rounded edges (openings, rounded brackets) the area considered for stress averaging is to be limited only to the first ring of border elements, over a length not above the relevant spacing of ordinary stiffeners (see Fig 5 and Fig 6).
- the area considered for stress averaging is to include an entire number of elements
- the area considered for stress averaging is not to be defined across structural discontinuities, web stiffeners or other abutting structure
- for regions where several different stress averaging areas may be defined, the worst is to be considered for the calculation of average Von Mises equivalent stress.

5.6 Particular requirements

5.6.1 Particular attention is to be paid to the stress flow along the studied structural member.

For fine mesh regions located on bracket webs in the vicinity of bracket toes, where an equivalent (s x s) area cannot be defined, the yielding check is to be based only on the criteria given in [5.4], item b).

Other structural details having shapes not allowing the stress averaging as required in [5.5] are to be specially considered by the Society, based on engineering judgment related to plastic redistribution ability.

Figure 5 : Example of stress averaging area at opening rounded edge

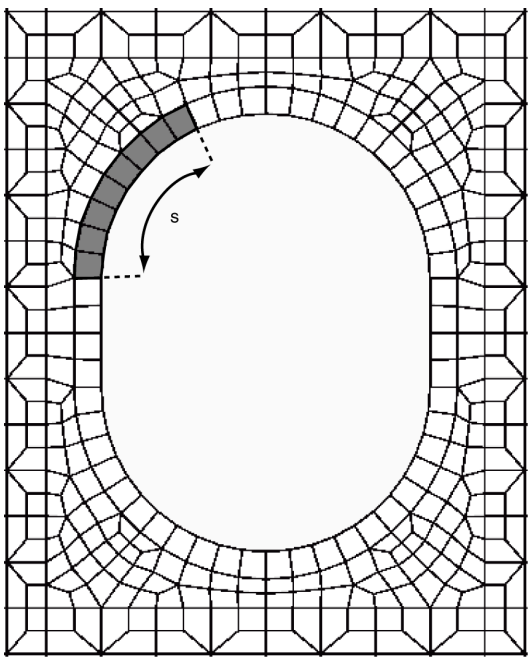

Figure 6 : Example of stress averaging area at rounded bracket edge

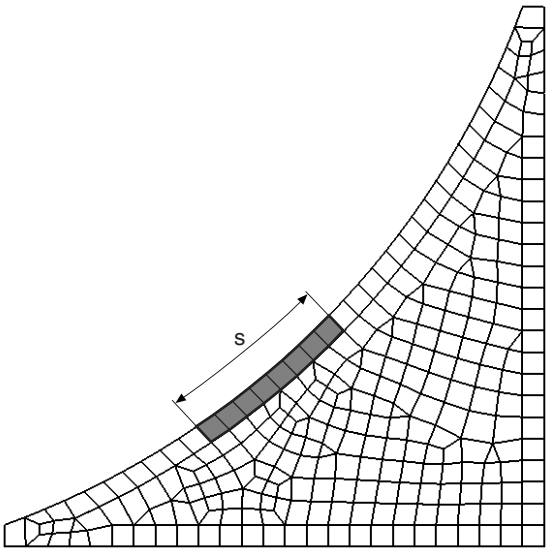

6 Stress calculation

6.1 Stresses induced by local and hull girder loads

6.1.1 Both local and hull girder loads are to be directly applied to the model, as specified in [4.3.1] and [4.4.1]. In this case, the stresses calculated by the finite element program include the contribution of both local and hull girder loads.

6.2 Stress components

6.2.1 Stress components are generally identified with respect to the element co-ordinate system, as shown, by example, in Fig 7. The orientation of the element co-ordinate system may or may not coincide with that of the reference co-ordinate system in Ch 1, Sec 1, [3.3].

The following stress components are to be calculated at the centroid of the mid-plane layer of each element:

- the normal stresses σ_1 and σ_2 in the directions of the element co-ordinate system axes
- the shear stress τ_{12} with respect to the element co-ordinate system axes
- the Von Mises equivalent stress, obtained from the following formula:

$$\sigma_{VM} = \sqrt{\sigma_1^2 + \sigma_2^2 - \sigma_1\sigma_2 + 3\tau_{12}^2}$$

Figure 7 : Reference and element co-ordinate systems

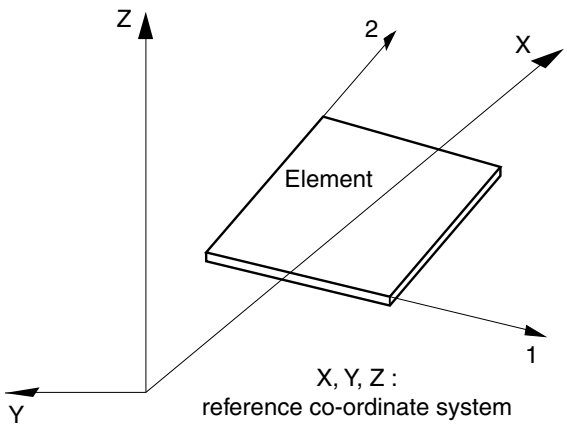

6.3 Stress calculation points

6.3.1 Stresses are generally calculated by the computer programs for each element. The values of these stresses are to be used for carrying out the checks required.

7 Buckling check

7.1 General

7.1.1 A local buckling check is to be carried out, according to Ch 1, Sec 7 for plate panels which constitute primary supporting members.

In carrying out this check, the stresses in the plate panels are to be calculated according to the present Section.

7.2 Buckling criteria

7.2.1 The buckling criteria for plate panels is to satisfy the following criterion:

$\eta \le \eta_{ALL}$ with: $\eta_{ALL} = 1$

η : Utilisation factor as defined in NR615.

7.2.2 The compressive buckling strength of struts, pillars and cross ties is to satisfy the following criterion:

$\eta \le \eta_{ALL}$ with: $\eta_{ALL} = 0,75$

η : Utilisation factor as defined in NR615.

8 Primary members subject to impact loads

8.1 General

8.1.1 The net section modulus w, in cm³, of primary supporting members and their net shear area A_{sh}, in cm², at any position along their span are not to be less than the values obtained from the following formulae:

$$w = \frac{f_{cb} P_I f_{pb} \ell^2 b_I}{m R_{eH}} 10^3$$

$$A_{sh} = 10 \frac{\sqrt{3} Q_I}{0,9 R_{eH}}$$

where:

b_I : Breadth of impact area supported by primary supporting member, in m, taken as:

$b_I = \sqrt{A_I}$

with b_I not to be taken greater than s

$A_I = 1,1\ L\ B\ C_B\ 10^{-3}$

B : Moulded breadth, in m, taken equal to the greatest moulded breadth measured amidships at the maximum draught T

C_B : Total block coefficient as defined in Ch 1, Sec 5, Symbols

L : Unit rule length, in m, as defined in Ch 1, Sec 1, [3.2.7]

f_{cb} : Correction factor for the bending moment at the ends and considering the patch load, taken as:

$f_{cb} = 3 f_{pb}^3 - 8 f_{pb}^2 + 6 f_{pb}$

f_{pb} : Patch load modification factor for bending, taken as:

$f_{pb} = \frac{\ell_I}{\ell}$

ℓ : Span, in m, of primary supporting member, measured between the supporting elements

ℓ_I : Extent of impact load area, in m, along the span:

$\ell_I = \sqrt{A_I}$

not to be taken greater than:

- $0,5\ \ell$ for the calculation of Q_I
- ℓ for the calculation of f_{pb}

m : Boundary coefficient, to be taken equal to:

- m = 10 in general
- m = 12 for bottom and side primary supporting members

P_I : Any impact pressure defined in the Rules, including:

- bottom impact pressure, as defined in Ch 1, Sec 11, [3.4]
- bow impact pressure, as defined in Ch 1, Sec 11, [4.3]
- dynamic impact pressure, as defined in Ch 1, Sec 5, [6.4.3]

Q_I : Shear force, in kN, taken as:

$Q_I = f_{cs}\, f_{dist}\, P_I\, \ell_I\, b_I$

f_{cs} : Correction factor for the proportion of patch load acting on a single primary supporting member, taken as:

$$f_{cs} = 0,5(f_{ps}^3 - 2f_{ps}^2 + 2)$$

f_{dist} : Coefficient for shear force distribution along the span, as defined in Fig 8

f_{ps} : Patch load modification factor for shear, taken as:

$$f_{ps} = 0,5\frac{b_I}{s}$$

For complex arrangements of primary supporting members, especially where grillage effect may not be ignored, or for primary supporting members having variable cross sections, direct calculation is to be performed.

It is to be checked that the maximum equivalent stress obtained by applying the load Q_I on a square area A_I to various locations on the model is not greater than 0,85 R_{eH} .

Figure 8 : Distribution of f_{dist} along the span of simple primary supporting members

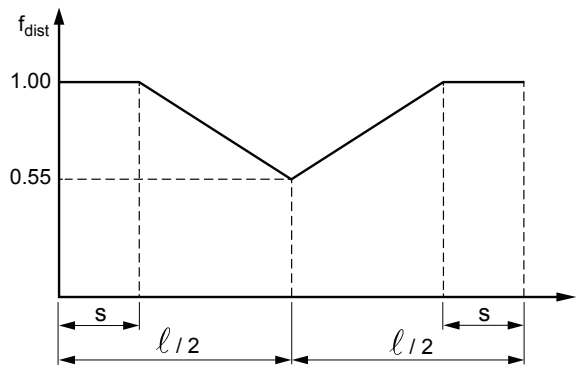

Section 10 Fatigue Check of Structural Details

Symbols

h_1 : Rule distribution, in m, of the relative wave elevation in upright condition defined in Ch 1, Sec 5, [3.5]

h_2 : Rule distribution, in m, of the relative wave elevation in inclined ship condition defined in Ch 1, Sec 5, [3.5]

I_Y : Moment of inertia, in m^4, of the hull transverse section around its horizontal neutral axis

M_{SW} : Design still water bending moment, in kN.m, at the hull transverse section considered, defined in Ch 1, Sec 5, [2.2]

M_{WH} : Horizontal wave bending moment, in kN.m, at the hull transverse section considered, defined in Ch 1, Sec 5, [3.3]

$M_{WV,H}$: Vertical wave bending moment, in kN.m, in hogging condition, at the hull transverse section considered, defined in Ch 1, Sec 5, [3.3]

$M_{WV,S}$: Vertical wave bending moment, in kN.m, in sagging condition, at the hull transverse section considered, defined in Ch 1, Sec 5, [3.3]

N : Z co-ordinate, in m, with respect to the reference co-ordinate system defined in Ch 1, Sec 1, [3.3], of the centre of gravity of the hull transverse section constituted by members contributing to the hull girder longitudinal strength considered as having their net scantlings

T : Maximum draught, in m, as defined in:

- Ch 1, Sec 1, [3.2.10] for site condition
- Ch 1, Sec 1, [3.2.11] for transit condition

T_1 : Draught, in m, corresponding to the loading condition considered

x, y, z : X, Y and Z co-ordinates, in m, of the calculation point with respect to the reference co-ordinate system defined in Ch 1, Sec 1, [3.3].

ρ : Sea water density, in t/m3: $\rho = 1{,}025$ t/m³

ρ_L : Density of the liquid cargo, in t/m.

1 General

1.1 Application

1.1.1 The structural details to be checked are those defined in Article [2].

The Society may require other details to be checked, when deemed necessary on the basis of the detail geometry and stress level.

1.2 Fatigue life and sea conditions

1.2.1 The fatigue life and sea conditions of the unit are to be specified by the owner, and to be indicated on the midship section drawing.

By default, the fatigue life is to be greater than 20 years, on site conditions.

1.3 Fatigue calculation

1.3.1 Fatigue calculation is to be provided to the Society for design review.

1.4 Spectral fatigue

1.4.1 For units intended to be granted the additional notation **Spectral Fatigue**, as defined in Pt A, Ch 1, Sec 2, [8.4.4], this calculation is to be a spectral fatigue analysis performed according to Article [3] and NI611 Guidelines for Fatigue Assessment of Steel Ships and Offshore Units.

For all other units a deterministic fatigue calculation is to be carried out according to Article [4]. Deterministic fatigue calculation may be also carried out at pre-design stage, or for verification of the spectral fatigue calculation.

1.5 Corrosion protection

1.5.1 Corrosive environment is to be taken into account where there is no corrosion protection system. Information on the corrosion protection system, if any, is to be given by the Designer.

2 Structural details

2.1 Structural details to be checked

2.1.1 The structural details to be checked are those defined in Pt B, Ch 13, Sec 5 of the Ship Rules for the service notation **oil tanker ESP**.

2.1.2 In addition, the following structural details are also to be checked:

a) In each typical cargo tank within the cargo tank area:
   - Side shell, bottom and deck longitudinals with:
     - transverse oiltight and swash bulkheads
     - transverse web frame
   - Ends or bracket ends of:
     - longitudinal girders
     - bottom transverse
     - horizontal stringers
     - vertical buttress supporting the horizontal stringer
   - Flanges of transverse web frames in way of tripping brackets

b) Topside connection with the main deck

c) Crane pedestal

d) Mooring integration structure with hull (turret, buoy or spread mooring)

e) Flare tower connection with hull

f) Turret: The long-term distribution of forces is to be submitted by the turret designer.

3 Spectral fatigue analysis

3.1 Steps for analysis

3.1.1 The spectral fatigue analysis includes the following three steps:

- Hydrodynamic analysis:
  This analysis determines the external loads induced by the waves on the unit, and the resulting motions
- Structural analysis:
  Loads are applied on a structural model of the unit. The structural analysis provides the RAOs of stresses at location of interest, within the model
- Fatigue damage calculation based on statistics of stress ranges.

3.2 Load model

3.2.1 The spectral fatigue analysis is to take into account at least, except duly justified:

- 3 internal loading conditions, including minimum and maximum draughts
- 25 headings
- 25 frequencies.

3.2.2 Intermittent wetting effect, near free surface, is to be taken into account by means of an additional (differential) pressure loading on the side shell. Loading is defined for a representative finite wave height. The result is used to correct stiffener bending stress in intermittent wetting area, other contributions of this loading being negligible.

3.2.3 The overall (solid) mass is distributed on plate and beam elements by means of adjusted density. Weight of topsides modules are introduced according to the lightship weight distribution, by means of beam elements with no rigidity. The inertia loadings are generated from the above mass model and the accelerations of the vessel. Cargo and ballast tanks are loaded by internal fluid pressure calculated from acceleration at the centre of gravity of the tank (quasistatic approximation).

3.3 Distribution of hot spot stress ranges

3.3.1 The short-term distribution of hot spot stress ranges for a given sea-state is obtained by spectral analysis of the transfer function of hot spot stress ranges, and by Rayleigh statistics. The long-term distribution, over a given period in time, is obtained by summation of the short term distributions, over the scatter diagram at site where the unit will operate.

3.4 Fatigue damage

3.4.1 The fatigue damage is evaluated from the distribution of stress ranges, by the Miner Sum.

3.5 Checking criteria

3.5.1 For the spectral fatigue analysis, the fatigue damage ratio is to be not greater than those given in Tab 1.

Table 1 : Damage ratio for spectral fatigue analysis

Consequence of failure	Degree of accessibility for inspection, maintenance and repair		
	Not accessible **(2)**	Underwater inspection **(3)**	Dry inspection
Critical **(1)**	0,1	0,25	0,5
Non-critical	0,2	0,5	1,0

(1) Critical damage includes loss of life, uncontrolled pollution, collision, sinking, other major damage to the installations and major production losses. All the structural elements are to be considered as critical, unless duly justified by an analysis of the consequences of failure.
(2) Includes areas that can be inspected in dry or underwater conditions but require heavy works such as dry-docking for repair.
(3) Includes areas that can be inspected in dry conditions but with extensive preparation and heavy impact on operation.

4 Deterministic fatigue analysis

4.1 General

4.1.1 Deterministic fatigue analysis is to be conducted with loads defined in [4.2], partial safety factors defined in [4.1.2] and checking criteria defined in [4.7].

4.1.2 Partial safety factors

The partial safety factors to be taken into account are those given in Tab 2.

Table 2 : Fatigue check – Partial safety factors

Partial safety factors covering uncertainties regarding:	Symbol	Value	
		General	Details at ends of ordinary stiffeners
Still water hull girder loads	γ_{S1}	1,00	1,00
Wave hull girder loads	γ_{W1}	1,03	1,11
Still water pressure	γ_{S2}	1,00	1,00
Wave pressure	γ_{W2}	1,07	1,15
Resistance	γ_R	1,02	1,02

4.2 Load model

4.2.1 Loads

The loads to consider for deterministic fatigue analysis are the design wave loads defined in Ch 1, Sec 5 and taken to a probability level of 10^{-5}.

The loads to be determined are the following ones:

- vertical wave bending moment
- accelerations
- relative wave elevation.

4.2.2 Loading conditions

The calculations are generally to be carried out for 4 loading conditions with their associated draughts T_i, as defined in Tab 3, that are representative of the loading / unloading sequence of the unit.

However, more than 4 loading conditions can be considered on a case-by-case basis.

Table 3 : Loading conditions

Draught T_i	Loading condition "i"
Maximum T_{maxi}	Full load
Intermediate 1 By default: 2/3 T_{maxi} + 1/3 T_{mini}	Case by case By default: full load
Intermediate 2 By default: 1/3 T_{maxi} + 2/3 T_{mini}	Case by case By default: ballast
Minimum T_{mini}	Ballast

4.2.3 Load cases

The fatigue check is based on the stress range induced at the hot spot by the time variation of the local pressures and hull girder loads in each load case “a”, “b”, “c” and “d” defined in [4.2.4] to [4.2.7] for the loading conditions defined in [4.2.2] (see Fig 1).

For the purpose of fatigue check, each load case “a”, “b”, “c” and “d” is divided in two cases “-max” and “-min” for which the local pressures defined in [4.2.4] to [4.2.7] and corresponding hull girder loads defined in [4.2.8].

Figure 1 : Stress range

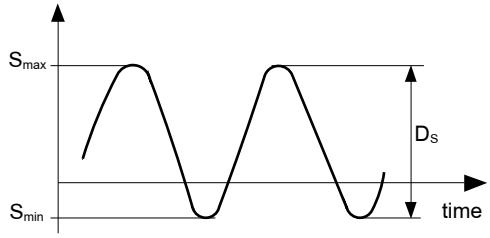

4.2.4 Load cases “a-max” and “a-min”, in upright ship condition

The still water sea pressure (p_S) is defined in Ch 1, Sec 5, [5.3].

The wave pressure (p_W) is defined in Tab 4.

No internal inertial pressures are considered.

Table 4 : Wave pressure in load case a

Location	Wave pressure p_W, in kN/m²	
	a-max	a-min
Bottom and sides below the waterline ($z \le T_1$)	$\alpha^{1/4}\frac{\rho g h_1}{2}\left[\frac{T_1+z}{T_1}\right]$	$-\alpha^{1/4}\frac{\rho g h_1}{2}\left[\frac{T_1+z}{T_1}\right]$ without being taken less than $\frac{\gamma_S}{\gamma_W}\rho g(z-T_1)$
Sides above the waterline ($z > T_1$)	$\rho g(T_1+\alpha^{1/4}h_1-z)$	0,0
Note 1: α : Coefficient equal to T_1/T, but not to be taken greater than 1		

4.2.5 Load cases “b-max” and “b-min”, in upright ship condition

Still water pressure (p_S) includes:

- the still water sea pressure defined in Ch 1, Sec 5, [5.3]
- the still water internal pressure, defined in Ch 1, Sec 5, [6.3.1]

for the various types of cargoes and for ballast.

Dynamic pressure (p_W) is constituted by internal inertial pressures defined in Tab 6.

No sea wave dynamic pressures are considered.

4.2.6 Load cases “c-max” and “c-min”, in inclined ship condition

Still water pressure (p_S) includes:

- the still water sea pressure defined in Ch 1, Sec 5, [5.3]
- the still water internal pressure, defined in Ch 1, Sec 5, [6.3.1]

for the various types of cargoes and for ballast.

Wave pressure (p_W) includes:

- the wave pressure obtained from Tab 5
- the inertial pressure obtained from Tab 6

for the various types of cargoes and ballast.

4.2.7 Load cases “d-max” and “d-min”, in inclined ship condition

Still water pressure (p_S) includes:

- the still water sea pressure defined in Ch 1, Sec 5, [5.3]
- the still water internal pressure, defined in Ch 1, Sec 5, [6.3.1]

for the various types of cargoes and for ballast.

Wave pressure (p_W) includes:

- the wave pressure obtained from Tab 5
- the inertial pressure obtained from Tab 6

for the various types of cargoes and ballast.

Table 5 : Wave pressure in inclined ship conditions (load cases “c” and “d”)

Location		Wave pressure p_W, in kN/m² **(1)**	
		c-max / d-max	c-min / d-min
Bottom and sides below the waterline ($z \le T_1$)	$y \ge 0$	$C_{F2}\alpha^{1/4}\rho g h_2 \frac{\lvert y\rvert}{B_W}\left[\frac{T_1+z}{T_1}\right]$	$-C_{F2}\alpha^{1/4}\rho g h_2 \frac{\lvert y\rvert}{B_W}\left[\frac{T_1+z}{T_1}\right]$ without being taken less than $\frac{\gamma_S}{\gamma_W}\rho g(z-T_1)$
	$y < 0$	$-C_{F2}\alpha^{1/4}\rho g h_2 \frac{\lvert y\rvert}{B_W}\left[\frac{T_1+z}{T_1}\right]$ without being taken less than $\frac{\gamma_S}{\gamma_W}\rho g(z-T_1)$	$C_{F2}\alpha^{1/4}\rho g h_2 \frac{\lvert y\rvert}{B_W}\left[\frac{T_1+z}{T_1}\right]$
Sides above the waterline ($z > T_1$)	$y \ge 0$	$\rho g\left[T_1 + 2C_{F2}\alpha^{1/4}\frac{\lvert y\rvert}{B_W}h_2 - z\right]$	0,0
	$y < 0$	0,0	$\rho g\left[T_1 + 2C_{F2}\alpha^{1/4}\frac{\lvert y\rvert}{B_W}h_2 - z\right]$

(1) In the formulae giving the wave pressure p_W, the ratio $|y| / B_W$ is not to be taken greater than 0,5.

Note 1:

α : Coefficient equal to T_1/T, but not to be taken greater than 1

C_{F2} : Combination factor, to be taken equal to:
- $C_{F2} = 1,0$ for load case “c”
- $C_{F2} = 0,5$ for load case “d”

B_W : Moulded breadth, in m, measured at the waterline at draught T_1, at the hull transverse section considered

h_2 : Reference value, in m, of the relative motion in the inclined ship condition, defined in Ch 1, Sec 5, [3.5.3] and not to be taken greater than the minimum of T_1 and $(D - 0,9\,T_1)$.

Table 6 : Inertial pressures

Cargo	Load case	Inertial pressures, in kN/m² **(1)**
Liquids	b-max	$p_W = \rho_L[-0,5a_{X1}\ell_B - a_{Z1}(z_{TOP} - z)]$
	b-min	$p_W = \rho_L[0,5a_{X1}\ell_B + a_{Z1}(z_{TOP} - z)]$
	c-max d-max	$p_W = \rho_L[0,7C_{FA}a_{Y2}(y - y_H) + (-0,7C_{FA}a_{Z2} - g)(z - z_H) + g(z - z_{TOP})]$
	c-min d-min	$p_W = \rho_L[-0,7C_{FA}a_{Y2}(y - y_H) + (0,7C_{FA}a_{Z2} - g)(z - z_H) + g(z - z_{TOP})]$

(1) The symbols used in the formulae of inertial pressures are defined in Ch 1, Sec 5, [6].

Note 1:

C_{FA} : Combination factor, to be taken equal to:
- $C_{FA} = 0,7$ for load case “c”
- $C_{FA} = 1,0$ for load case “d”

4.2.8 Nominal hull girder normal stresses

The nominal hull girder normal stresses are obtained, in N/mm², from the following formulae:

- for members contributing to the hull girder longitudinal strength:

$$\sigma_h = \gamma_{S1}\sigma_{SW} + \gamma_{W1}(C_{FV}\sigma_{WV} + C_{FH}\sigma_{WH})$$

- for members not contributing to the hull girder longitudinal strength:

$$\sigma_h = 0$$

where:

C_{FV}, C_{FH} : Combination factors defined in Tab 8

σ_{SW} : Still water hull girder normal stresses, in N/mm², taken equal to:

$$\sigma_{SW} = \frac{M_{SW}}{I_Y}(z - N)10^{-3}$$

M_{SW} : Still water bending moment for the loading condition considered

σ_{WV}, σ_{WH}: Hull girder normal stresses, in N/mm², defined in Tab 7.

Table 7 : Nominal hull girder normal stresses

Load case	σ_{WV}, in N/mm²	σ_{WH}, in N/mm²
a-max	$\frac{0,625M_{WV,H}}{I_Y}(z-N)10^{-3}$	0
a-min	$\frac{0,625M_{WV,S}}{I_Y}(z-N)10^{-3}$	0
b-max b-min	0	0
c-max d-max	0	$-\frac{0,625M_{WH}}{I_Z}y10^{-3}$
c-min d-min	0	$\frac{0,625M_{WH}}{I_Z}y10^{-3}$

Table 8 : Combination factors C_{FV}, C_{FH}

Load case	C_{FV}	C_{FH}
"a"	1,0	0
"b"	1,0	0
"c"	0,4	1,0
"d"	0,4	1,0

4.3 Damage ratio

4.3.1 Elementary damage ratio

The elementary fatigue damage ratio is to be obtained from the following formula:

$$D_{ij} = \frac{N_t}{K_p}\frac{(\Delta\sigma_{N,ij})^3}{(-\ln p_R)^{3/\xi}}\mu_{ij}\,\Gamma_C\left[\frac{3}{\xi}+1\right]$$

where:

N_t : Number of cycles, to be taken equal to:

$$N_t = \frac{31,55\alpha_0 T_{FL}}{T_A}10^6$$

α_0 : Sailing factor, taken equal to 1

T_A : Average period, in seconds, to be taken equal to: $T_A = 4 \log L$

T_{FL} : Design fatigue life, in years

$\Delta\sigma_{N,ij}$: Elementary notch stress range, in N/mm², defined in [4.6]

$$\mu_{ij} = 1 - \frac{\Gamma_N\left[\frac{3}{\xi}+1,\nu_{ij}\right] - \Gamma_N\left[\frac{5}{\xi}+1,\nu_{ij}\right]\nu_{ij}^{-2/\xi}}{\Gamma_C\left[\frac{3}{\xi}+1\right]}$$

$\xi = \xi_0\left(1,04 - 0,14\frac{|z - T_1|}{D - T_1}\right)$ without being less than 0,9 ξ_0

$\xi_0 = \frac{73 - 0,07L}{60}$ without being less than 0,85

T_1 : Draught, in m, corresponding to the loading condition "Full load" or "Ballast"

$$\nu_{ij} = -\left(\frac{S_q}{\Delta\sigma_{N,ij}}\right)^{\xi} \ln p_R$$

$$S_q = (K_p 10^{-7})^{1/3}$$

$$K_p = 5,802\left(\frac{22}{t}\right)^{0,9} 10^{12}$$

t : Net thickness, in mm, of the element under consideration not being taken less than 22 mm

$p_R = 10^{-5}$

$\Gamma_N[X+1,\nu_{ij}]$: Incomplete Gamma function, calculated for $X = 3 / \xi$ or $X = 5 / \xi$ and equal to:

$$\Gamma_N[X+1,\nu_{ij}] = \int_0^{\nu_{ij}} t^X e^{-t} dt$$

Values of $\Gamma_N[X+1,\nu_{ij}]$ are also indicated in Tab 9. For intermediate values of X and ν_{ij}, Γ_N may be obtained by linear interpolation

$\Gamma_C[X+1]$: Complete Gamma function, calculated for $X = 3 / \xi$, equal to:

$$\Gamma_C[X+1] = \int_0^{\infty} t^X e^{-t} dt$$

Values of $\Gamma_C[X+1]$ are also indicated in Tab 10. For intermediate values of X, Γ_C may be obtained by linear interpolation.

4.3.2 Cumulative damage ratio

The cumulative damage ratio is to be obtained from the following formula:

$$D = \frac{1}{\beta_{IF}}\left(K_{cor}\sum_{i=1}^{4}\alpha_i D_i\right)$$

where:

D_i : Cumulative damage ratio for unit in loading condition "i"

$$D_i = \beta_{ab}\frac{D_{ai} + D_{bi}}{2} + \beta_c D_{ci} + \beta_d D_{di}$$

β_{ab}, β_c, β_d: Distribution coefficients for load cases "a", "b", "c", "d", as defined in Tab 11.
Other values may be considered on a case by case basis

D_{ai}, D_{bi}, D_{ci}, D_{di} : Elementary damage ratios for load cases "a", "b", "c" and "d", respectively, in loading condition "i", as defined in [4.3.1]

K_{cor} : Corrosion factor, equal to:

- $K_{cor} = 1,5$ for cargo tanks
- $K_{cor} = 1,1$ for ballast tanks having an effective coating protection.

α_i : Part of the unit's life in loading condition "i" taken equal to 0,25 in case of 4 loading conditions.
The Society reserves its right to modify the values of the α_i coefficients:

$$\sum_i \alpha_i = 1$$

β_{IF} : Fatigue life improvement factor for improvement technique, if any, as defined in:

- [4.3.3] in case of grinding
- [4.3.4] for improvement techniques other than grinding

$\beta_{IF} = 1,0$ if no improvement technique is used

Table 9 : Function Γ_N [X+1, ν_{ij}]

X	Value of ν_{ij}													
	1,5	2,0	2,5	3,0	3,5	4,0	4,5	5,0	5,5	6,0	6,5	7,0	7,5	8,0
2,5	0,38	0,73	1,13	1,53	1,90	2,22	2,48	2,70	2,86	2,99	3,08	3,15	3,20	3,24
2,6	0,38	0,75	1,19	1,63	2,04	2,41	2,71	2,96	3,16	3,31	3,42	3,51	3,57	3,61
2,7	0,39	0,78	1,25	1,73	2,20	2,62	2,97	3,26	3,49	3,67	3,81	3,91	3,99	4,04
2,8	0,39	0,80	1,31	1,85	2,38	2,85	3,26	3,60	3,87	4,09	4,25	4,37	4,46	4,53
2,9	0,39	0,83	1,38	1,98	2,57	3,11	3,58	3,98	4,30	4,56	4,75	4,90	5,01	5,10
3,0	0,39	0,86	1,45	2,12	2,78	3,40	3,95	4,41	4,79	5,09	5,33	5,51	5,65	5,75
3,1	0,40	0,89	1,54	2,27	3,01	3,72	4,35	4,89	5,34	5,70	5,99	6,21	6,37	6,49
3,2	0,40	0,92	1,62	2,43	3,27	4,08	4,81	5,44	5,97	6,40	6,74	7,01	7,21	7,36
3,3	0,41	0,95	1,72	2,61	3,56	4,48	5,32	6,06	6,68	7,20	7,61	7,93	8,17	8,36
3,4	0,41	0,99	1,82	2,81	3,87	4,92	5,90	6,76	7,50	8,11	8,60	8,99	9,29	9,51
3,5	0,42	1,03	1,93	3,03	4,22	5,42	6,55	7,55	8,42	9,15	9,74	10,21	10,57	10,85
3,6	0,42	1,07	2,04	3,26	4,60	5,97	7,27	8,45	9,48	10,34	11,05	11,62	12,06	12,41
3,7	0,43	1,12	2,17	3,52	5,03	6,59	8,09	9,47	10,68	11,71	12,56	13,25	13,79	14,21
3,8	0,43	1,16	2,31	3,80	5,50	7,28	9,02	10,63	12,06	13,28	14,30	15,13	15,80	16,31
3,9	0,44	1,21	2,45	4,10	6,02	8,05	10,06	11,94	13,63	15,09	16,31	17,32	18,12	18,76
4,0	0,45	1,26	2,61	4,43	6,59	8,91	11,23	13,43	15,42	17,16	18,63	19,85	20,83	21,61
4,1	0,45	1,32	2,78	4,80	7,22	9,87	12,55	15,12	17,47	19,54	21,31	22,78	22,98	24,94
4,2	0,46	1,38	2,96	5,20	7,93	10,95	14,05	17,05	19,82	22,29	24,41	26,19	27,65	28,83
4,3	0,47	1,44	3,16	5,63	8,70	12,15	15,73	19,24	22,51	25,45	28,00	30,16	31,93	33,38
4,4	0,48	1,51	3,37	6,11	9,56	13,50	17,64	21,74	25,60	29,10	32,16	34,77	36,94	38,71
4,5	0,49	1,57	3,60	6,63	10,52	15,01	19,79	24,58	29,14	33,31	36,99	40,15	42,79	44,96
4,6	0,49	1,65	3,85	7,20	11,57	16,70	22,23	27,82	33,20	38,17	42,59	46,41	49,63	52,29
4,7	0,50	1,73	4,12	7,82	12,75	18,59	24,98	31,53	37,88	43,79	49,10	53,72	57,65	60,91
4,8	0,52	1,81	4,40	8,50	14,04	20,72	28,11	35,75	43,25	50,29	56,66	62,26	67,05	71,05
4,9	0,52	1,90	4,71	9,25	15,49	23,11	31,64	40,57	49,42	57,81	65,47	72,24	78,08	82,98
5,0	0,53	1,99	5,04	10,07	17,09	25,78	35,65	46,08	56,53	66,52	75,72	83,92	91,03	97,05
5,1	0,55	2,09	5,40	10,97	18,86	28,79	40,19	52,39	64,71	76,61	87,66	97,58	106,3	113,6
5,2	0,56	2,19	5,79	11,95	20,84	32,17	45,34	59,60	74,15	88,32	101,6	113,6	124,2	133,2
5,3	0,57	2,30	6,21	13,03	23,03	35,96	51,19	67,85	85,02	101,9	117,8	132,4	145,3	156,4
5,4	0,58	2,41	6,66	14,21	25,46	40,23	57,83	77,29	97,56	117,7	136,8	154,4	170,1	183,8
5,5	0,59	2,54	7,14	15,50	28,17	45,03	65,37	88,11	112,0	136,0	159,0	180,3	199,4	216,2
5,6	0,61	2,67	7,67	16,92	31,18	50,42	73,93	100,5	128,8	157,3	184,9	210,7	234,0	254,6
5,7	0,62	2,80	8,23	18,48	34,53	56,49	83,66	114,7	148,1	182,0	215,2	246,4	274,8	300,1
5,8	0,64	2,95	8,84	20,19	38,25	63,33	94,73	131,0	170,4	210,9	250,7	288,4	323,1	354,1
5,9	0,65	3,10	9,50	22,07	42,39	71,02	107,3	149,8	196,2	244,4	292,2	337,9	380,2	418,2
6,0	0,67	3,26	10,21	24,13	47,00	79,69	121,6	171,2	226,1	283,5	340,9	396,2	447,7	494,4
6,1	0,68	3,44	10,98	26,39	52,14	89,45	138,0	195,9	260,6	329,0	398,0	464,9	527,7	585,0
6,2	0,70	3,62	11,82	28,87	57,86	100,5	156,5	224,2	300,6	382,1	464,9	546,0	622,5	692,8
6,3	0,72	3,81	12,71	31,60	64,24	112,9	177,7	256,8	347,0	444,0	543,5	641,6	734,9	821,1
6,4	0,73	4,02	13,68	34,60	71,34	126,9	201,7	294,3	400,7	516,3	635,8	754,5	868,3	974,0
6,5	0,75	4,23	14,73	37,90	79,25	142,6	229,2	337,3	463,0	600,6	744,2	887,9	1026,6	1156,3
6,6	0,77	4,46	15,87	41,52	88,07	160,4	260,5	386,9	535,2	699,2	871,6	1045,5	1214,6	1373,8

Table 10 : Function Γ_C [X+1]

X	Γ_C [X+1]	X	Γ_C [X+1]
2,5	3,323	3,3	8,855
2,6	3,717	3,4	10,136
2,7	4,171	3,5	11,632
2,8	4,694	3,6	13,381
2,9	5,299	3,7	15,431
3,0	6,000	3,8	17,838
3,1	6,813	3,9	20,667
3,2	7,757	4,0	24,000

Table 11 : Distribution coefficients

	$T_i \geq \frac{T_{mini} + T_{maxi}}{2}$	$T_i < \frac{T_{mini} + T_{maxi}}{2}$
β_{ab}	1/3	2/3
β_c	1/3	1/3
β_d	1/3	0

4.3.3 Grinding of welds

Grinding technique for improving fatigue life is applicable to full penetration welds.

Grinding of welds is to be regarded as an exceptional measure considered case by case, and only when the design fatigue life cannot be achieved by the design (such as improvements of shape of cut-outs, softening of bracket toes and local increase in thickness) and geometry of the structural detail.

In such a case:

- the information “grinding of welds”, with indication of the toe to be ground, is to be specified by the designer on drawings
- the relevant grinding procedure, according to Ch 1, Sec 15, [2.2], is to be submitted to the Society by the designer for review
- the fatigue life improvement factor β_{IF}, as defined in [4.3.2], may be taken equal to 2,2, provided that a permanent protective coating is applied on the ground weld. Otherwise, the value of β_{IF} is considered by the Society on a case-by-case basis.

4.3.4 Improvement techniques other than grinding of welds

Improving fatigue life by using improvement techniques other than grinding is to be regarded as an exceptional measure. Such improvement techniques may be considered by the Society on a case-by-case basis. In such a case, the fatigue life improvement factor β_{IF}, as defined in [4.3.2], is to be duly justified by the designer.

4.4 Stress range

4.4.1 Unless otherwise specified, stresses are to be determined at the hot spots indicated, for each detail, in the relevant tables listed in Ship Rules Pt B, Ch 13, Sec 5, Tab 2 and Ship Rules Pt B, Ch 13, Sec 5, Tab 3.

4.4.2 Stress components

For the details in [2.1], the stresses to be used in the fatigue check are the normal stresses in the direction perpendicular to the weld joint.

Where the fatigue check is required for details other than those in [2.1], the stresses to be used are the principal stresses at the hot spots which form the smallest angle with the crack rising surface.

4.4.3 The hot spot stress range and the notch stress range are to be obtained according to [4.5] and [4.6], respectively.

4.5 Hot spot stress range

4.5.1 Elementary hot spot stress range

The elementary hot spot stress range $\Delta\sigma_{G,ij}$ is to be obtained, in N/mm^2, in accordance with:

- [4.5.2] for details where the stresses are to be calculated through a three dimensional structural models
- [4.5.3] for details located at ends of ordinary stiffeners.

4.5.2 Hot spot stresses directly obtained through finite element analyses based on a very fine mesh

Where the structural detail is analysed through a finite element analysis based on a very fine mesh, the elementary hot spot stress range may be obtained as the difference between the maximum and minimum stresses induced by the wave loads in the hot spot considered. The requirements for:

- the finite element modelling, and
- the calculation of the hot spot stresses and the hot spot stress range,

are specified in item a) to item d).

a) Finite element model

In general, the determination of hot spot stresses necessitates carrying out a very fine mesh finite element analysis, further to a coarser mesh finite element analysis. The boundary nodal displacements or forces obtained from the coarser mesh model are applied to the very fine mesh model as boundary conditions.

The model extension is to be such as to enable a faithful representation of the stress gradient in the vicinity of the hot spot and to avoid it being incorrectly affected by the application of the boundary conditions.

b) Finite element modelling criteria

The finite element model is to be built according to the following requirements:

- the detail may be considered as being realised with no misalignment
- the size of finite elements located in the vicinity of the hot spot is to be about once to twice the thickness of the structural member. Where the details is the connection between two or more members of different thickness, the thickness to be considered is that of the thinnest member
- the centre of the first element adjacent to a weld toe is to be located between the weld toe and 0,4 times the thickness of the thinnest structural member connected by the weld
- plating, webs and face plates of primary and secondary members are to be modelled by 4-node thin shell or 8-node solid elements. In the case of a steep stress gradient, 8-node thin shell elements or 20-node solid elements are recommended
- when thin shell elements are used, the structure is to be modelled at mid-face of the plates
- the aspect ratio of elements is to be not greater than 2.

c) Calculation of hot spot stresses

When the detail is located at a structural discontinuity where a large stress gradient is expected the hot spot stresses are normally obtained by linear extrapolation. The stress components is to be evaluated at a distance of 0,5 and 1,5 times the thickness of the plating from the weld toe and linearly extrapolated to the weld toe. The two evaluation points are to be located in two different finite elements.

In other cases or when extrapolation can not be used the hot spot stresses are to be calculated at the centroid of the first element adjacent to the hot spot. The size of this element has to be determined according to the requirements in item b).

The stress components to be considered are those specified in [4.4.2]. They are to be calculated at the surface of the plate in order to take into account the plate bending moment, where relevant.

Where the detail is the free edge of an opening (e.g. a cutout for the passage of an ordinary stiffener through a primary supporting member), the hot spot stresses have to be calculated at the free edge. The stresses can be obtained by linear extrapolation or using fictitious truss elements with minimal stiffness fitted along the edge.

d) Calculation of the elementary hot spot stress range

The elementary hot spot stress range is to be obtained, in N/mm², from the following formula:

$$\Delta\sigma_{S,ij} = |\sigma_{S,ij,max} - \sigma_{S,ij,min}|$$

where:

$\sigma_{S,ij,max}$, $\sigma_{S,ij,min}$: Maximum and minimum values of the hot spot stress, induced by the maximum and minimum loads, defined in [4.2.3] to [4.2.8]

i : Denotes the load case

j : Denotes the loading condition.

4.5.3 Hot spot stresses in structural details located at ends of ordinary stiffeners

For the fatigue check of connections located at ends of ordinary stiffeners, the elementary hot spot stress range $\Delta\sigma_{G,ij}$ may be calculated as specified in a) and b):

a) Nominal local stress

For each load case “a”, “b”, “c” and “d”, “-max” and “-min”, the nominal local stress $\sigma\ell$ applied to the ordinary stiffener, is to be obtained, in N/mm², from the following formula:

$$\sigma_\ell = \frac{\gamma_{S2}p_S + \gamma_{W2}p_W}{12w}\left(1 - \frac{s}{2\ell}\right)s\ell^2 10^3$$

where:

ℓ : Span, in m, of ordinary stiffeners, measured between the supporting members, see Ch 1, Sec 3, [5.2]

s : Spacing, in m, of ordinary stiffeners

w : Net section modulus, in cm³, of the stiffener

b) Elementary hot spot stress range

For each load case "a", "b", "c" and "d", the elementary hot spot stress range $\Delta\sigma_{G,ij}$ is to be obtained, in N/mm², from the following formula:

$$\Delta\sigma_{G,ij} = |\sigma_{G(i\text{-max})} - \sigma_{G(i\text{-min})}| + K_\ell \Delta\sigma_{DEF,ij}$$

where:

$$\sigma_{G(i\text{-max})} = (\sigma_h + K_\ell K_S \sigma_\ell)_{(i\text{-max})}$$

$$\sigma_{G(i\text{-min})} = (\sigma_h + K_\ell K_S \sigma_\ell)_{(i\text{-min})}$$

$\Delta\sigma_{DEF,ij}$: Nominal stress range due to the local deflection of the ordinary stiffener to be obtained, in N/mm², from the following formula:

$$\Delta\sigma_{DEF,ij} = \frac{4(\Delta\delta)EI}{w\ell^2}10^{-5}$$

where:

$\Delta\delta$: Local range of deflection, in mm, of the ordinary stiffener

I : Net moment of inertia, in cm⁴, of the ordinary stiffener.

σ_h : Nominal hull girder stress, in N/mm², for the load case "i-max" or "i-min" considered, to be determined as in indicated in [4.2.8]

σ_ℓ : Nominal local stress for the load case "i-max" or "i-min" considered, to be determined as indicated in item a)

K_h, K_ℓ : Stress concentration factors, defined in Ch 1, App 1 for the special structural details there specified

K_S : Coefficient taking account of the stiffener section geometry, equal to:

$$K_S = 1 + \left[\frac{t_f(a^2 - b^2)}{2w_B}\right]\left[1 - \frac{b}{a+b}\left(1 + \frac{w_B}{w_A}\right)\right]10^{-3}$$

without being taken less than 1,0

where:

a, b : Eccentricities of the stiffener, in mm, defined in Fig 2:

Bulb sections are to be taken as equivalent to an angle profile, as defined in Ch 1, Sec 3, [5.1.2] with:

$a = 0{,}75\ b_f$

$b = 0{,}25\ b_f$

b_f : Face plate width, in mm

t_f : Face plate net thickness, in mm

w_A, w_B : Net section moduli of the stiffener without attached plating, in cm³, respectively in A and B (see Fig 2), about its neutral axis parallel to the stiffener web.

Figure 2 : Geometry of a stiffener section

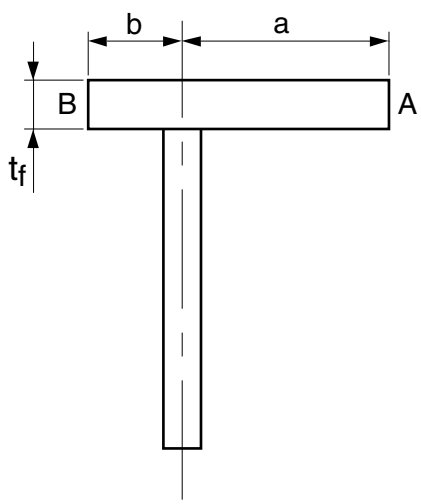

4.6 Notch stress range

4.6.1 Elementary notch stress range

The elementary notch stress range is to be obtained, in N/mm², from the following formula:

$\Delta\sigma_{N,ij} = K_{C,ij}\ \Delta\sigma_{N0,ij}$

with:

$\Delta\sigma_{N0,ij} = 0,7\ K_F\ K_m\ \Delta\sigma_{G,ij}$

where:

$$K_{C,ij} = \frac{0,4R_{eH}}{\Delta\sigma_{N0,ij}} + 0,6 \quad \text{with} \quad 0,8 \le K_{C,ij} \le 1$$

K_F : Fatigue notch factor, equal to:

$$K_F = \lambda\sqrt{\frac{\theta}{30}}$$

for flame-cut edges, K_F may be taken equal to the values defined in Tab 12, depending on the cutting quality, post treatment and control quality.

where:

λ : Coefficient depending on the weld configuration, and given in Tab 13

θ : Mean weld toe angle, in degrees, without being taken less than 30°. Unless otherwise specified, θ may be taken equal to:

- 30° for butt joints
- 45° for T joints or cruciform joints

K_m : Stress concentration factor, taking account of misalignment, defined in Tab 14, and to be taken not less than 1,0

$\Delta\sigma_{G,ij}$: Elementary hot spot stress range, defined in [4.5].

Table 12 : K_F values

Flame-cut edge description	K_F
Machine gas cut edges, with subsequent machining, dressing or grinding	1,4
Machine thermally cut edges, corners removed, no crack by inspection	1,6
Manually thermally cut edges, free from cracks and severe notches	2,0
Manually thermally cut edges, uncontrolled, no notch deeper than 0,5 mm	2,5

4.7 Checking criteria

4.7.1 The cumulative damage ratio D defined in [4.3.2] is to comply with the following criteria:

$$SF \cdot D \le \frac{1}{\gamma_R}$$

where:

SF = 2

γ_R : Partial safety factor defined in [4.1.2].

Note 1: In case that all hydrodynamic values and distributions are lower than minimum or rule values and distribution with significant margin (as a rule hydrodynamic loads lower than 25% of the rule loads), a Safety Factor SF lower than 2 may be considered by the Society.

4.8 Loading / unloading

4.8.1 The fatigue due to loading/unloading may have to be assessed.

By default, one loading/unloading per week is taken into account.

In this case the calculation should take into account the wave at a probability level not less than 10^{-4}.

Table 13 : Weld coefficient λ

Weld configuration				Coefficient λ	Grinding applicable
Type	Description	Stress direction	Figure		
Butt weld		Parallel to the weld	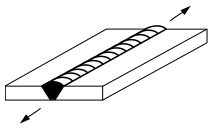	2,10	yes
		Perpendicular to the weld	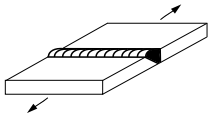	2,40	yes
Fillet weld	Continuous	Parallel to the weld	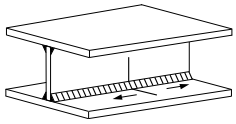	1,80	yes
		Perpendicular to the weld **(1)**	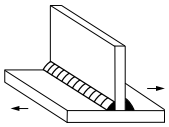	2,15	yes
	Well contoured end	Perpendicular to the weld	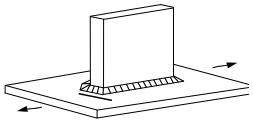	2,15	yes
	Not continuous	Parallel to the weld	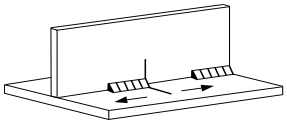	2,90	yes
	Lap weld (root cracking)	Axial loading out of plane and perpendicular to the weld	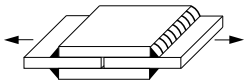	4,50	no
Cruciform joint	Full penetration	Perpendicular to the weld	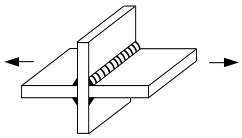	2,10	yes
	Partial penetration	Perpendicular to the weld	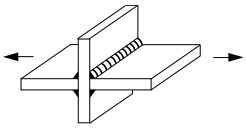	Toe cracking: 2,10	yes
				Root cracking: 4,50	no

(1) This case includes the hot spots indicated in the sheets of special structural details in Pt B, Ch 3, App 2 of the Ship Rules, relevant to the connections of longitudinal ordinary stiffeners with transverse primary supporting members.

Table 14 : Stress concentration factor K_m for misalignment

Geometry		K_m **(1)**
Axial misalignment between flat plates	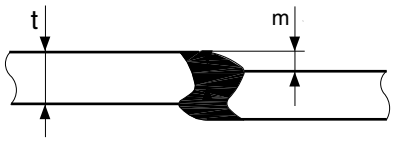	$1 + \frac{3(m - m_0)}{t}$
Axial misalignment between flat plates of different thicknesses	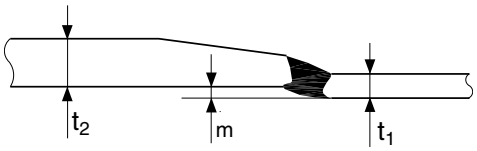	$1 + \frac{6(m - m_0)}{t_1} \frac{t_1^{3/2}}{t_1^{3/2} + t_2^{3/2}}$
Axial misalignment in fillet welded cruciform joints	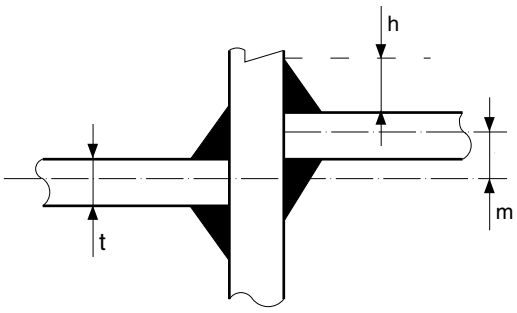	$1 + \frac{m - m_0}{t + h}$

(1) When the actual misalignment m is lower than the permissible misalignment m_0, K_m is to be taken equal to 1.

Note 1:

m : Actual misalignment between two abutting members

m_0 : Permissible misalignment for the detail considered, given in Pt B, Ch 13, Sec 2 of the Ship Rules

Section 11 Fore Part

Symbols

a_{Z1} : Reference value of the vertical acceleration, defined in Ch 1, Sec 5, [3.6]

B : Moulded breadth, in m, taken equal to the greatest moulded breadth measured amidships at the maximum draught T

c_a : Aspect ratio of the plate panel, equal to:

$$c_a = 1{,}21\sqrt{1 + 0{,}33\left(\frac{s}{\ell}\right)^2} - 0{,}69\frac{s}{\ell}$$

to be taken not greater than 1,0

C_B : Total block coefficient, equal to:

$$C_B = \frac{\Delta}{1{,}025\,LBT}$$

C_B not to be taken greater than 1

c_E : Coefficient to be taken equal to:

$c_E = 1$ for $L \le 65$ m

$c_E = 3 - L / 32{,}5$ for $65 \text{ m} < L < 90$ m

$c_E = 0$ for $L \ge 90$ m

c_F : Coefficient to be taken equal to:

$c_F = 0{,}9$ for forecastle sides

$c_F = 1{,}0$ in other cases

c_r : Coefficient of curvature of the panel, equal to:

$c_r = 1 - 0{,}5\, s / r$

to be taken not less than 0,5

r : Radius of curvature of the panel, in m

g : Gravity acceleration, in m/s², taken equal to 9,81

h_1 : Reference value of the ship relative motion defined in Ch 1, Sec 5, [3.5]

m : Boundary coefficient, to be taken equal to:

- in general, for stiffeners considered as clamped: m = 12
- for stiffeners considered as simply supported: m = 8

other values of m may be considered, on a case by case basis, for other boundary conditions

ℓ : Span, in m, of ordinary stiffeners

L : Rule length, in m, as defined in Ch 1, Sec 1, [3.2.6]

L_2 : L, but to be taken not greater than 120 m

p_{BI} : Bottom impact pressure, defined in [3.4]

p_{FI} : Bow impact pressure, defined in [4.3]

p_S, p_W : Still water pressure and wave pressure defined in [2.3]

s : Spacing, in m, of ordinary stiffeners

T : Maximum draught, in m, as defined in:

- for site condition: Ch 1, Sec 1, [3.2.11]
- for transit condition: Ch 1, Sec 1, [3.2.12]

x, y, z : X, Y and Z co-ordinates, in m, of the calculation point with respect to the reference co-ordinate system defined in Ch 1, Sec 1, [3.3]

β_b , β_s : Coefficients defined in Ch 1, Sec 8, [3.4.2]

Δ : Moulded displacement, in tonnes, at draught T, in sea water (density ρ = 1,025 t/m³)

ρ : Sea water density, in t/m³, to taken equal to 1,025

ρ_L : Density, in t/m³, of the liquid cargo.

1 General

1.1 Application

1.1.1 The requirements of this Section apply for the scantling of structures located forward of the collision bulkhead, i.e.:

- fore peak structures
- stems.

In addition, it includes:

- reinforcements of the flat bottom forward area
- reinforcements of the bow flare area.

1.1.2 The fore part of the unit is defined in Ch 1, Sec 1, [3.2.8].

The fore part may differ in site and transit conditions.

1.1.3 Fore peak structures which form vertical watertight boundary between two compartments not intended to carry liquids, and which do not belong to the outer shell, are to be subjected to lateral pressure in flooding conditions. Their scantlings are to be determined according to the relevant criteria in Ch 1, Sec 7 to Ch 1, Sec 9.

1.2 Connections of the fore part with structures located aft of the collision bulkhead

1.2.1 Tapering

Adequate tapering is to be ensured between the scantlings in the fore part and those aft of the collision bulkhead. The tapering is to be such that the scantling requirements for both areas are fulfilled.

1.2.2 Supports of fore peak structures

Aft of the collision bulkhead, side girders are to be fitted as specified in:

- Ch 1, Sec 3, [11.3.2] for primary supporting members of transversally framed single side
- Ch 1, Sec 3, [11.5.3] for primary supporting members of transversally framed double side

as applicable.

1.3 Net scantlings

1.3.1 As specified in Ch 1, Sec 3, [7.1] all scantlings referred to in this Section, with the exception of those indicated in [5], are net, i.e. they do not include any margin for corrosion.

Gross scantlings are obtained as specified in Ch 1, Sec 3, [7.2].

2 Fore peak

2.1 Partial safety factors

2.1.1 The partial safety factors to be considered for checking fore peak structures are specified in:

- Ch 1, Sec 7, Tab 1 for plating
- Ch 1, Sec 8, Tab 1 for stiffeners
- Ch 1, Sec 9, Tab 4 for primary supporting members.

2.1.2 Finite element analysis

When a finite element analysis, as defined in Ch 1, Sec 9, [3.5], is performed in order to verify the scantlings of the fore peak structure, the hull girder loads do not need to be considered.

Note 1: For units provided with an external turret, the hull girder loads are to be considered on a case-by-case basis.

2.2 Load point

2.2.1 Unless otherwise specified, lateral pressure is to be calculated at:

- the lower edge of the elementary plate panel considered, for plating
- mid-span, for stiffeners.

2.3 Load model

2.3.1 General

The still water and wave lateral pressures in intact conditions are to be considered. They are to be calculated as specified in [2.3.2] for the elements of the outer shell and in [2.3.3] for the other elements.

Still water pressure (p_S) includes:

- the still water sea pressure, defined in Tab 1
- the still water internal pressure due to liquids or ballast, defined in Tab 3
- the still water internal pressure due to dry uniform cargoes on deck, defined in Tab 4.

Wave pressure (p_W) includes:

- the wave pressure, defined in Tab 1
- the inertial internal pressure due to liquids or ballast, defined in Tab 3
- the inertial internal pressure due to dry uniform cargoes on deck, defined in Tab 4.

2.3.2 Lateral pressures for the elements of the outer shell

The still water and wave lateral pressures are to be calculated considering separately:

- the still water and wave external sea pressures
- the still water and wave internal pressures, considering the compartment adjacent to the outer shell as being loaded.

If the compartment adjacent to the outer shell is not intended to carry liquids, only the external sea pressures are to be considered.

Table 1 : Still water and wave pressures

Location	Still water sea pressure p_S, in kN/m²	Wave pressure p_W, in kN/m²
Bottom and side below the waterline: $z \le T$	$\rho g (T - z)$	$\rho g h_1 e^{\frac{-2\pi(T-z)}{L}}$
Side above the waterline: $z > T$	0	$\rho g (T + h_1 - z)$ without being taken less than $0,15\ \varphi_1\ \varphi_2\ L$
Exposed deck	Pressure due to the load carried**(1)**	$19,6 n \varphi_1 \varphi_2 \sqrt{H}$

(1) The pressure due to the load carried is to be defined by the Designer and, in any case, it may not be taken less than $10\ \varphi_1\ \varphi_2$ kN/m², where φ_1 and φ_2 are defined hereafter.
The Society may accept pressure values lower than $10\ \varphi_1\ \varphi_2$ kN/m² when considered appropriate on the basis of the intended use of the deck.

Note 1:

φ_1 : Coefficient defined in Tab 2

φ_2 : Coefficient taken equal to:
- $\varphi_2 = 1$ if $L \ge 120$ m
- $\varphi_2 = L/120$ if $L < 120$ m

$$H = \left[2,66\left(\frac{x}{L} - 0,7\right)^2 + 0,14\right]\sqrt{\frac{VL}{C_B}} - (z - T)$$

without being taken less than 0,8

V : Maximum ahead service speed, in knots, to be taken not less than 13 knots.

Table 2 : Coefficient for pressure on exposed decks

Exposed deck location	φ_1
Freeboard deck	1,00
Top of lowest tier	0,75
Top of second tier	0,56
Top of third tier	0,42
Top of fourth tier	0,32
Top of fifth tier	0,25
Top of sixth tier	0,20
Top of seventh tier	0,15
Top of eighth tier and above	0,10

Table 3 : Still water and inertial internal pressures due to liquids

Still water pressure p_S, in kN/m²	Inertial pressure p_W, in kN/m²
$\rho_L\, g\, (z_L - z)$	$\rho_L\, a_{Z1}\, (z_{TOP} - z)$
Note 1: z_{TOP} : Z co-ordinate, in m, of the highest point of the tank z_L : Z co-ordinate, in m, of the highest point of the liquid: $z_L = z_{TOP} + 0,5\,(z_{AP} - z_{TOP})$ z_{AP} : Z co-ordinate, in m, of the moulded deck line of the deck to which the air pipes extend, to be taken not less than z_{TOP}.	

Table 4 : Still water and inertial internal pressures due to dry uniform cargoes

Still water pressure p_S, in kN/m²	Inertial pressure p_W, in kN/m²
The value of p_S is, in general, defined by the Designer; in any case it may not be taken less than 10 kN/m². When the value of p_S is not defined by the Designer, it may be taken, in kN/m², equal to 6,9 h_{TD}, where h_{TD} is the compartment 'tweendeck height at side, in m.	$p_S \frac{a_{Z1}}{g}$

2.3.3 Lateral pressures for elements other than those of the outer shell

The still water and wave lateral pressures to be considered as acting on an element which separates two adjacent compartments are those obtained considering the two compartments individually loaded.

2.3.4 Lateral pressure in testing conditions

The lateral pressure in testing conditions, p_T, in kN/m², is taken equal to:

- $p_T = p_{ST} - p_S$ for bottom shell plating and side shell plating
- $p_T = p_{ST}$ otherwise

where:

p_{ST} : Still water pressure defined in Ch 1, Sec 5, [6.7]

p_S : Still water sea pressure defined in Ch 1, Sec 5 and calculated for the draught T_1 at which the testing is carried out. If the draught T_1 is not defined by the Designer, it may be taken equal to the light ballast draught T_B defined in Ch 1, Sec 7, [3.2.2].

2.4 Longitudinally framed bottom

2.4.1 Plating and ordinary stiffeners

The net scantlings of plating and ordinary stiffeners are to be not less than the values obtained from the formulae in Tab 5 and the minimum values in the same table.

Table 5 : Scantling of bottom plating and ordinary stiffeners

Element	Formula	Minimum value
Plating	Net thickness, in mm: $t = 14,9 c_a c_r s \sqrt{\gamma_R \gamma_m \frac{\gamma_{S2} p_S + \gamma_{W2} p_W}{\lambda R_y}}$	Net minimum thickness, in mm(**1**): in general: $t = c_F\,(0,03\,L + 5,5)\,k^{1/2} - c_E$ for inner bottom: $t = 2 + 0,017\,L\,k^{1/2} + 4,5\,s$
Ordinary stiffeners	Net section modulus, in cm³: $w = \gamma_R \gamma_m \beta_b \frac{\gamma_{S2} p_S + \gamma_{W2} p_W}{m(R_y - \gamma_R \gamma_m \sigma_{X1})}\left(1 - \frac{s}{2\ell}\right) s \ell^2 10^3$	Web net minimum thickness, in mm, to be not less than the lesser of: • $t = 1,5 L_2^{1/3} k^{1/6}$ • the net thickness of the attached plating.
	Net shear sectional area, in cm²: $A_{Sh} = 10 \gamma_R \gamma_m \beta_s \frac{\gamma_{S2} p_S + \gamma_{W2} p_W}{R_y}\left(1 - \frac{s}{2\ell}\right) s \ell$	
(1) L need not be taken greater than 300 m. **Note 1:** σ_{X1} : Hull girder normal stress, taken equal to: • the value defined in Ch 1, Sec 8, [3.3.5], for stiffeners contributing to the hull girder longitudinal strength • $\sigma_{X1} = 0$, for stiffeners not contributing to the hull girder longitudinal strength λ : Coefficient taken equal to: • for longitudinally framed bottom: $\lambda = \lambda_L$, defined in Ch 1, Sec 7, [3.3.1] • for transversely framed bottom: $\lambda = \lambda_T$, defined in Ch 1, Sec 7, [3.4.1].		

2.4.2 Floors

Floors are to be fitted at every four frame spacing and generally spaced no more than 2,5 m apart.

The floor dimensions and scantlings are to be not less than those specified in Tab 6.

In no case may the above scantlings be lower than those of the corresponding side transverses, as defined in [2.6.2].

Table 6 : Longitudinally framed bottom floor dimensions and scantlings

Dimension or scantling	Specified value
Web height h_M , in m	h_M = 0,085 D + 0,15
Web net thickness, in mm	To be not less than that required for double bottom floors aft of the collision bulkhead; in any case, it may be taken not greater than 10 mm.
Floor face plate net sectional area A_p , in cm²	A_P = 3,15 D
Floor face plate net thickness t_p , in mm	t_P = 0,4 D + 5 t_p may be assumed not greater than 14 mm.

2.4.3 Centre girder

Where no centreline bulkhead is fitted (see [2.10]), a centre bottom girder having the same dimensions and scantlings required in [2.4.2] for floors is to be provided.

The centre bottom girder is to be connected to the collision bulkhead by means of a large end bracket.

2.4.4 Side girders

Side girders, having the same dimensions and scantlings required in [2.4.2] for floors, are generally to be fitted every two longitudinals, in line with bottom longitudinals located aft of the collision bulkhead. Their extension is to be compatible in each case with the shape of the bottom.

2.5 Transversely framed bottom

2.5.1 Plating

The net scantling of plating is to be not less than the value obtained from the formulae in Tab 5 and the minimum values in the same table.

2.5.2 Floors

Solid floors are to be fitted at every frame spacing.

The solid floor dimensions and scantlings are to be not less than those specified in Tab 7.

2.5.3 Centre girder

Where no centreline bulkhead is fitted (see [2.10]), a centre bottom girder is to be fitted according to [2.4.3].

Table 7 : Transversely framed bottom - Floor dimensions and scantlings

Dimension or scantling	Specified value
Web height h_M, in m	h_M = 0,085 D + 0,15
Web net thickness, in mm	To be not less than that required for double bottom floors aft of the collision bulkhead; in any case, it may be taken not greater than 10 mm.
Floor face plate net sectional area A_p, in cm²	A_P = 1,67 D

2.6 Longitudinally framed side

2.6.1 Plating and ordinary stiffeners

The net scantlings of plating and ordinary stiffeners are to be not less than the values obtained from the formulae in Tab 8 and the minimum values in the same table.

2.6.2 Side transverses

Side transverses are to be located in way of bottom transverse and are to extend to the upper deck. Their ends are to be amply faired in way of bottom and deck transverses.

Their net section modulus w, in cm³, and net shear sectional area A_{Sh}, in cm², are to be not less than the values obtained from the following formulae:

$$w = \gamma_R \gamma_m \lambda_b \beta_b \frac{\gamma_{S2} p_S + \gamma_{W2} p_W}{8 R_y} s \ell^2 10^3$$

$$A_{Sh} = 10 \gamma_R \gamma_m \lambda_s \beta_s \frac{\gamma_{S2} p_S + \gamma_{W2} p_W}{R_y} s \ell$$

λ_b , λ_s : Coefficients defined in Ch 1, Sec 8, [3.4.3]

Table 8 : Scantling of side plating and ordinary stiffeners

Element	Formula	Minimum value
Plating	Net thickness, in mm: $t = 14{,}9 c_a c_r s \sqrt{\gamma_R \gamma_m \frac{\gamma_{S2} p_S + \gamma_{W2} p_W}{\lambda R_y}}$	Net minimum thickness, in mm **(1)**: $t = c_F (0{,}03 L + 5{,}5) k^{1/2} - c_E$
Ordinary stiffeners	Net section modulus, in cm³: $w = \gamma_R \gamma_m \beta_b \frac{\gamma_{S2} p_S + \gamma_{W2} p_W}{m(R_y - \gamma_R \gamma_m \sigma_{X1})} \left(1 - \frac{s}{2\ell}\right) s \ell^2 10^3$	Web net minimum thickness, in mm, to be not less than the lesser of: • $t = 1{,}5 L_2^{1/3} k^{1/6}$ • the net thickness of the attached plating
	Net shear sectional area, in cm²: $A_{Sh} = 10 \gamma_R \gamma_m \beta_s \frac{\gamma_{S2} p_S + \gamma_{W2} p_W}{R_y} \left(1 - \frac{s}{2\ell}\right) s \ell$	

(1) L need not be taken greater than 300 m.

Note 1:

σ_{X1} : Hull girder normal stress, taken equal to:
- the value defined in Ch 1, Sec 8, [3.3.5], for stiffeners contributing to the hull girder longitudinal strength
- $\sigma_{X1} = 0$, for stiffeners not contributing to the hull girder longitudinal strength

λ : Coefficient taken equal to:
- for longitudinally framed side: $\lambda = \lambda_L$, defined in Ch 1, Sec 7, [3.3.1]
- for transversely framed side: $\lambda = \lambda_T$, defined in Ch 1, Sec 7, [3.4.1].

2.7 Transversely framed side

2.7.1 Plating and ordinary stiffeners (side frames)

Side frames fitted at every frame space are to have the same vertical extension as the collision bulkhead.

The net scantlings of plating and side frames are to be not less than the values obtained from the formulae in Tab 8 and the minimum values in the table.

The value of the side frame section modulus is generally to be maintained for the full extension of the side frame.

2.7.2 Side girders

Depending on the hull body shape and structure aft of the collision bulkhead, one or more adequately spaced side girders per side are to be fitted.

Their net section modulus w, in cm³, and net shear sectional area A_{Sh}, in cm², are to be not less than the values obtained from the following formulae:

$$w = \gamma_R \gamma_m \beta_b \frac{\gamma_{S2} p_S + \gamma_{W2} p_W}{8 R_y} s \ell^2 10^3$$

$$A_{Sh} = 10 \gamma_R \gamma_m \beta_s \frac{\gamma_{S2} p_S + \gamma_{W2} p_W}{R_y} s \ell$$

Moreover, the depth b_A, in mm, and the net thickness t_A, in mm, of the side girder web are generally to be not less than the values obtained from the following formulae:

$b_A = 2{,}5 (180 + L)$

$t_A = (6 + 0{,}018 L) k^{1/2}$

2.7.3 Panting structures

In order to withstand the panting loads, horizontal structures are to be provided. These structures are to be fitted at a spacing generally not exceeding 2 m and consist of side girders supported by panting beams or side transverses whose ends are connected to deck transverses, located under the tank top, so as to form a strengthened ring structure.

Panting beams, which generally consist of sections having the greater side vertically arranged, are to be fitted every two frames.

2.7.4 Connection between panting beams, side frames and side girders

Each panting beam is to be connected to the side frames by means of brackets whose arms are generally to be not less than twice the panting beam depth.

2.7.5 Connection between side frames and side girders

Side frames not supporting panting beams are to be connected to side girders by means of brackets having the same thickness as that of the side girder and arms which are to be not less than one half of the depth of the side girder.

2.7.6 Panting beam scantlings

The net area A_B, in cm², and the net inertia J_B, in cm⁴, of the panting beam section are to be not less than the values obtained from the following formulae:

$A_B = 0,5\ L - 18$

$J_B = 0,34\ (0,5\ L - 18)\ b_B^2$

where:

b_B : Beam length, in m, measured between the internal edges of side girders or the internal edge of the side girder and any effective central or lateral support.

Where side girder spacing is other than 2 m, the values A_B and J_B are to be modified according to the relation between the actual spacing and 2 m.

2.7.7 Panting beams of considerable length

Panting beams of considerable length are generally to be supported at the centreline by a wash bulkhead or pillars arranged both horizontally and vertically.

2.7.8 Non-tight platforms

Non-tight platforms may be fitted in lieu of side girders and panting beams. Their openings and scantlings are to be in accordance with [2.9.1].

Their spacing is to be not greater than 2,5 m.

If the peak exceeds 10 m in depth, a non-tight platform is to be arranged at approximately mid-depth.

2.7.9 Additional transverse bulkheads

Where the peak exceeds 10 m in length and the frames are supported by panting beams or non-tight platforms, additional transverse wash bulkheads or side transverses are to be fitted.

2.8 Decks

2.8.1 Plating and ordinary stiffeners

The net scantlings of plating and ordinary stiffeners are to be not less than the values obtained from the formulae in Tab 9 and the minimum values in the same table.

2.8.2 Primary supporting members

Scantlings of primary supporting members are to be in accordance with Ch 1, Sec 9.

Table 9 : Scantling of deck plating and ordinary stiffeners

Element	Formula	Minimum value
Plating	Net thickness, in mm: $t = 14,9 c_a c_r s \sqrt{\gamma_R \gamma_m \frac{\gamma_{S2} p_S + \gamma_{W2} p_W}{\lambda R_y}}$	Net minimum thickness, in mm(**1**): $t = 2,1 + 0,013\ L\ k^{1/2} + 4,5\ s$
Ordinary stiffeners	Net section modulus, in cm³: $w = \gamma_R \gamma_m \beta_b \frac{\gamma_{S2} p_S + \gamma_{W2} p_W}{m(R_y - \gamma_R \gamma_m \sigma_{X1})} \left(1 - \frac{s}{2\ell}\right) s \ell^2 10^3$	Web net minimum thickness, in mm, to be not less than the lesser of: • $t = 1,5\ L_2^{1/3}\ k^{1/6}$ • the net thickness of the attached plating.
	Net shear sectional area, in cm²: $A_{Sh} = 10 \gamma_R \gamma_m \beta_s \frac{\gamma_{S2} p_S + \gamma_{W2} p_W}{R_y} \left(1 - \frac{s}{2\ell}\right) s \ell$	

(1) L need not be taken greater than 300 m.

Note 1:

σ_{X1} : Hull girder normal stress, taken equal to:
- the value defined in Ch 1, Sec 8, [3.3.5], for stiffeners contributing to the hull girder longitudinal strength
- $\sigma_{X1} = 0$, for stiffeners not contributing to the hull girder longitudinal strength

λ : Coefficient taken equal to:
- for longitudinally framed deck: $\lambda = \lambda_L$, defined in Ch 1, Sec 7, [3.3.1]
- for transversely framed deck: $\lambda = \lambda_T$, defined in Ch 1, Sec 7, [3.4.1]
- for deck not contributing to the hull girder longitudinal strength: $\lambda = 1$

2.9 Platforms

2.9.1 Non-tight platforms

Non-tight platforms located inside the peak are to be provided with openings having a total area not less than 10% of that of the platforms. Moreover, the thickness of the plating and the section modulus of ordinary stiffeners are to be not less than those required in [2.10] for the non-tight central longitudinal bulkhead.

The number and depth of non-tight platforms within the peak is considered by the Society on a case by case basis.

The platforms may be replaced by equivalent horizontal structures whose scantlings are to be supported by direct calculations.

2.9.2 Platform transverses

The net sectional area of platform transverses, calculated considering a width of attached plating whose net sectional area is equal to that of the transverse flange, is to be not less than the value obtained, in cm², from the following formula:

$$A = 10\gamma_R\gamma_m\frac{\gamma_{S2}p_S + \gamma_{W2}p_W}{C_P R_y}d_S h_S$$

where:

p_S, p_W : Still water pressure and wave pressure, defined in Ch 1, Sec 5, acting at the ends of the platform transverse in the direction of its axis

d_S : Half of the longitudinal distance, in m, between the two transverses longitudinally adjacent to that under consideration

h_S : Half of the vertical distance, in m, between the two transverses vertically adjacent to that under consideration

C_P : Coefficient, to be taken equal to:

$$C_P = 1 \quad \text{for} \quad \frac{d_P}{r_P} \le 70$$

$$C_P = 1{,}7 - 0{,}01\frac{d_P}{r_P} \quad \text{for} \quad 70 < \frac{d_P}{r_P} \le 140$$

When $d_P / r_P > 140$, the scantlings of the struts are considered by the Society on a case by case basis

d_P : Distance, in cm, from the face plate of the side transverse and that of the bulkhead vertical web, connected by the strut, measured at the level of the platform transverse

r_P : Radius of gyration of the strut, to be obtained, in cm, from the following formula:

$$r_P = \sqrt{\frac{J}{A_E}}$$

J : Minimum net moment of inertia, in cm⁴, of the strut considered

A_E : Actual net sectional area, in cm², of the transverse section of the strut considered.

2.9.3 Breasthooks

Breasthooks are to have the same thickness of that required for platforms. They are to be arranged on the stem, in way of every side longitudinal, or at equivalent spacing in the case of transverse framing, extending aft for a length equal to approximately twice the breasthook spacing.

2.10 Central longitudinal bulkhead

2.10.1 General

Except for dry peaks, a centreline longitudinal wash bulkhead may be required in liquid compartments for which there is a risk of resonance in the transverse direction.

2.10.2 Extension

In the case of a bulbous bow, such bulkhead is generally to extend for the whole length and depth of the fore peak.

Where hull structures are flared, such as those situated above the bulb and in the fore part of the peak, the bulkhead may be locally omitted.

Similarly, the extension of the bulkhead may be limited for bows without a bulb, depending on the shape of the hull. However, the bulkhead is to be fitted in the higher part of the peak.

2.10.3 Plating thickness

The net plating thickness of the lower part of the longitudinal bulkhead over a height at least equal to h_M defined in [2.4.2] is to be not less than that required for the centre girder in [2.4.3].

Elsewhere, the net thickness of the longitudinal bulkhead plating is to be not less than the value obtained, in mm, from the following formula:

t = 6,5 + 0,013 L

qith L to be taken not greater than 200 m.

2.10.4 Ordinary stiffeners

The net section modulus of ordinary stiffeners is to be not less than the value obtained, in cm^3, from the following formula:

$w = 3,5\ s\ \ell^2\ k\ (z_{TOP} - z_M)$

where:

z_{TOP} : Z co-ordinate, in m, of the highest point of the tank

z_M : Z co-ordinate, in m, of the stiffener mid-span.

2.10.5 Primary supporting members

Vertical and longitudinal primary supporting members, to be made preferably with symmetrical type sections, are to have a section modulus not less than 50% of that required for the corresponding side transverse or side girder.

The vertical and longitudinal webs are to be provided with adequate fairing end brackets and to be securely connected to the struts, if any.

2.10.6 Openings

Bulkhead openings are to be limited in the zone corresponding to the centre girder to approximately 2% of the total area of the bulkhead, and, in the zone above, to not less than 10% of the total area of the bulkhead. Openings are to be located such as to affect as little as possible the plating sections adjacent to primary supporting members.

2.11 Bulbous bow

2.11.1 General

Where a bulbous bow is fitted, fore peak structures are to effectively support the bulb and are to be adequately connected to its structures.

2.11.2 Shell plating

The thickness of the shell plating of the fore end of the bulb and the first strake above the keel is generally to be not less than that required in [5.2.1] for plate stems. This thickness is to be extended to the bulbous zone, which, depending on its shape, may be damaged by anchors and chains during handling.

2.11.3 Connection with the fore peak

Fore peak structures are to be extended inside the bulb as far as permitted by the size and shape of the latter.

2.11.4 Horizontal diaphragms

At the fore end of the bulb, the structure is generally to be supported by means of horizontal diaphragms, spaced not more than 1 m apart, and a centreline vertical diaphragm.

2.11.5 Longitudinal stiffeners

Bottom and side longitudinals are to extend inside the bulb, forward of the fore end by at least 30% of the bulb length measured from the perpendicular to the fore end of the bulb.

The fore end of longitudinals is to be located in way of a reinforced transverse ring; forward of such ring, longitudinals are to be replaced by ordinary transverse rings.

2.11.6 Floors

Solid floors are to be part of reinforced transverse rings generally arranged not more than 3 frame spaces apart.

2.11.7 Breasthooks

Breasthooks, to be placed in line with longitudinals, are to be extended on sides aft of the stem, so as to form longitudinal side girders.

2.11.8 Longitudinal centreline wash bulkhead

For a bulb of considerable width, a longitudinal centreline wash bulkhead may be required by the Society in certain cases.

2.11.9 Transverse wash bulkhead

In way of a long bulb, transverse wash bulkheads or side transverses of adequate strength arranged not more than 5 frame spaces apart may be required by the Society in certain cases.

3 Reinforcements of the flat bottom forward area

3.1 General

3.1.1 The flat bottom forward area is to be assessed for both transit and site conditions.

Alternative method may be accepted on a case-by-case basis.

3.2 Area to be reinforced

3.2.1 In addition to the requirements in Article [2], the structures of the flat bottom forward area are to be able to sustain the dynamic pressures due to the bottom impact. The flat bottom forward area extends:

- longitudinally, over the bottom located between ξ L and 0,05 L aft of the fore end, where the coefficient ξ is obtained from the following formula:

  $\xi = 0,25\ (1,6 - C_B)$

  without being taken less than 0,20 or greater than 0,25
- transversely, over the whole flat bottom and the adjacent zones up to a height, in mm, from the base line, not less than 2 L. In any case, it is not necessary that such height be greater than 300 mm.

3.3 Conditions of impact

3.3.1 The bottom dynamic impact pressure is to be considered if:

$T_F < \min(0,04\ L;\ 8,6)$

where:

T_F : Minimum forward draught, in m, among those foreseen in operation

The value of T_F adopted for the calculations is to be specified in the loading manual.

An alternative arrangement and extension of strengthening with respect to the above may also be required where the minimum forward draught exceeds 0,04 L, depending on the shape of the forward hull body and the ship's length.

3.4 Bottom impact pressure

3.4.1 The bottom impact pressure p_{BI} is to be obtained, in kN/m², from the following formula:

$p_{BI} = 62\ C_1\ C_{SL}\ L^{0,6}$ if $L \le 135$

$p_{BI} = (1510 - 2,5\ L)\ C_1\ C_{SL}$ if $L > 135$

where:

$$C_1 = \frac{119 - 2300\frac{T_F}{L}}{78 + 1800\frac{T_F}{L}}$$ without being taken greater than 1,0

T_F : Draught defined in [3.3.1]

C_{SL} : Longitudinal distribution factor, taken equal to:

$C_{SL} = 0$ for $x \le x_1$

$C_{SL} = \dfrac{x - x_1}{x_2 - x_1}$ for $x_1 < x < x_2$

$C_{SL} = 1$ for $x \ge x_2$

with:

$$x_1 = \left(0,55 + \frac{L}{2000}\right)L$$

$$x_2 = \left(0,35 + 0,5C_B + \frac{L}{3000}\right)L \quad \text{with } 0,60 \le C_B \le 0,85$$

Note 1: When f_{RWE}, as defined in Ch 1, Sec 5, is greater than 1, bow impact pressure should be considered on a case-by-case basis.

3.5 Scantlings

3.5.1 In addition to the requirements in [2.4.1] and [2.5.1], the net scantlings of plating and net plastic section modulus of the ordinary stiffeners of the flat bottom forward area, defined in [3.2] and [3.3], are to be not less than the values obtained from the formulae in Tab 10 taking into account the minimum values given in the same table.

3.5.2 Tapering

Outside the flat bottom forward area, scantlings are to be gradually tapered so as to reach the values required for the areas considered.

3.5.3 Primary supporting members

The scantlings of the primary supporting members are to be checked according to Ch 1, Sec 9, taking into account a pressure of 0,3 p_{BI} over the ship breadth and, in the longitudinal direction, over one floor spacing.

Table 10 : Reinforcements of plating and ordinary stiffeners of the flat bottom forward area

Element	Formula	Minimum value
Plating	Net thickness, in mm: $t = \frac{15,8\alpha_p s}{C_d}\sqrt{\frac{p_{BI}}{R_{eG}}}$	Net minimum thickness, in mm: $t = (0,03\ L + 5,5)\ k^{1/2}$ where k is the material factor defined in Pt B, Ch 4, Sec 1, [2.2] of the Ship Rules
Ordinary stiffeners	Net plastic section modulus, in cm³: $Z_{pl} = \frac{p_{BI}}{0,9x4(n_s+2)R_{eG}} s\ell^2 10^3$	Net minimum web thickness, in mm, to be not less than the lesser of: • $t = 1,5\ L_2^{1/3}\ k^{1/6}$ where k is the material factor defined in Pt B, Ch 4, Sec 1, [2.2] of the Ship Rules • the net thickness of the attached plating
	Net web thickness sectional area, in mm: $t_w = \frac{\sqrt{3}}{2}\frac{p_{BI}}{(h_w+t_p)R_{eG}} s\ell 10^3$	

3.6 Arrangement of primary supporting members and ordinary stiffeners: longitudinally framed bottom

3.6.1 The requirements in [3.6.2] to [3.6.4] apply to the structures of the flat bottom forward area, defined in [3.2], in addition to the requirements of [2.4].

3.6.2 Bottom longitudinals and side girders, if any, are to extend as far forward as practicable, and their spacing may not exceed that adopted aft of the collision bulkhead.

3.6.3
The spacing of solid floors in a single or double bottom is to be not greater than either:
- that required for the midship section in Ch 1, Sec 3, [10] or
- (1,35 + 0,007 L) m

whichever is the lesser.

However, where the minimum forward draught T_F is less than 0,02 L, the spacing of floors forward of 0,2 L from the stem is to be not greater than (0,9 + 0,0045 L) m.

3.6.4 The Society may require adequately spaced side girders having a depth equal to that of the floors. As an alternative to the above, girders with increased scantlings may be fitted.

3.7 Arrangement of primary supporting members and ordinary stiffeners: transversely framed double bottom

3.7.1 The requirements in [3.7.2] to [3.7.3] apply to the structures of the flat bottom forward area, defined in [3.2], in addition to the requirements of [2.5].

3.7.2 Solid floors are to be fitted:
- at every second frame between 0,75L and 0,8L from the aft end
- at every frame space forward of 0,8L from the aft end.

3.7.3 Side girders with a depth equal to that of the floors are to be fitted at a spacing generally not exceeding 2,4 m. In addition, the Society may require intermediate half height girders, half the depth of the side girders, or other equivalent stiffeners.

4 Reinforcements of the bow area

4.1 General

4.1.1 The bow area is to be assessed for both transit and site conditions.

Alternative method may be accepted on a case-by-case basis.

4.2 Area to be reinforced

4.2.1 In addition to the requirements in Article [2], the structures of the bow area are to be able to sustain the dynamic pressures due to the bow impact pressure.

The bow area to be reinforced is the area extending forward of 0,9 L from the aft end and, vertically, above the minimum draught, as defined in Ch 1, Sec 1, [3.2.11].

4.3 Bow impact pressure

4.3.1 The bow impact pressure p_{FI} is to be obtained, in kN/m², from the following formula:

$$p_{FI} = C_S C_L C_Z (0{,}22 + 0{,}15 \tan\alpha)(k_c \sin\beta + 0{,}6\sqrt{L})^2$$

where:

C : Wave parameter, defined in Ch 1, Sec 5

C_L : Coefficient depending on the ship's length:

- $C_L = 0{,}0125\ L$ for $L < 80$ m
- $C_L = 1{,}0$ for $L \geq 80$ m

C_S : Coefficient depending on the type of structures on which the bow impact pressure is considered to be acting:

- $C_S = 1{,}8$ for plating and ordinary stiffeners
- $C_S = 0{,}5$ for primary supporting members

C_Z : Coefficient depending on the distance between the summer load waterline and the calculation point:

- $C_Z = C - 0{,}5\ (z - T)$ for $z \geq 2\ C + T - 11$
- $C_Z = 5{,}5$ for $z < 2\ C + T - 11$

k_c : Parameter to be taken equal to:

- for on-site conditions: $k_c = 4{,}8$
- for transit conditions: $k_c = 0{,}4\ V_S$

V_S : Maximum ahead speed in transit, in knots

The Society may accept a reduced value for k on a case-by-case basis

α : Flare angle at the calculation point, defined as the angle between a vertical line and the tangent to the side plating, measured in a vertical plane normal to the horizontal tangent to the shell plating (see Fig 1)

β : Entry angle at the calculation point, defined as the angle between a longitudinal line parallel to the centreline and the tangent to the shell plating in a horizontal plane (see Fig 1).

Note 1: When f_{RWE}, as defined in Ch 1, Sec 5, is greater than 1, bow impact pressure should be considered on a case-by-case basis.

Figure 1 : Definition of angles α and β

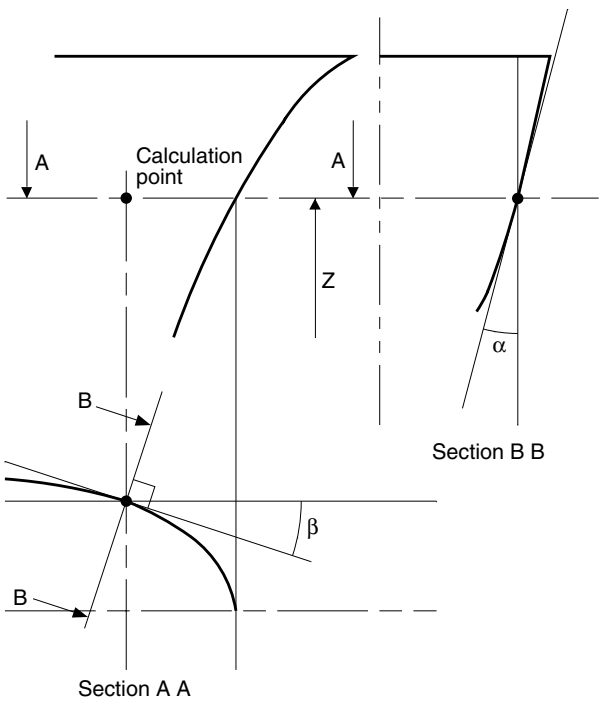

4.4 Scantlings

4.4.1 In addition to the requirements in [2.6.1] and [2.7.1], the net scantlings of plating and ordinary stiffeners of the bow area, defined in [4.2], are to be not less than the values obtained from the formulae in Tab 11 and the minimum values given in the same table.

Table 11 : Reinforcements of plating and ordinary stiffeners of the bow area

Element	Formula	Minimum value
Plating	Net thickness, in mm: $t = \frac{15,8\alpha_p s}{C_d}\sqrt{\frac{p_{FI}}{R_{eG}}}$	Net minimum thickness, in mm: $t = (0,03\ L + 5,5)\ k^{1/2}$ where k is the material factor defined in Pt B, Ch 4, Sec 1, [2.2] of the Ship Rules
Ordinary stiffeners	Net plastic section modulus, in cm³: $Z_{pl} = \frac{p_{FI}}{0,9x4(n_s+2)R_{eG}} s\ell^2 10^3$	Net minimum web thickness, in mm, to be not less than the lesser of: • $t = 1,5\ L_2^{1/3}\ k^{1/6}$ where k is the material factor defined in Pt B, Ch 4, Sec 1, [2.2] of the Ship Rules • the net thickness of the attached plating
	Net web thickness sectional area, in mm: $t_w = \frac{\sqrt{3}}{2}\frac{p_{FI}}{(h_w+t_p)R_{eG}} s\ell 10^3$	

4.4.2 Tapering

Outside the bow area, scantlings are to be gradually tapered so as to reach the values required for the areas considered.

4.4.3 Intercostal stiffeners

Intercostal stiffeners are to be fitted at mid-span where the angle between the stiffener web and the attached plating is less than 70°.

4.4.4 Primary supporting members

Primary supporting members are generally to be verified through direct calculations carried out according to Ch 1, Sec 9 considering the bow impact pressures defined in [4.3].

5 Stems

5.1 General

5.1.1 Arrangement

Adequate continuity of strength is to be ensured at the connection of stems to the surrounding structure.

Abrupt changes in sections are to be avoided.

5.1.2 Gross scantlings

With reference to Ch 1, Sec 3, [7.1] all scantlings and dimensions referred to in [5.2] and [5.3] are gross, i.e. they include the margins for corrosion.

5.2 Plate stems

5.2.1 Where the stem is constructed of shaped plates, the gross thickness of the plates below the load waterline is to be not less than the value obtained, in mm, from the following formula:

$$t_S = 1,37(0,95 + \sqrt{L_3})\sqrt{k}$$

where:

L_3 : Ship's length L, in m, but to be taken not greater than 300.

Above the load waterline this thickness may be gradually tapered towards the stem head, where it is to be not less than that required for side plating at ends.

5.2.2 The expanded width of the stem is not to be less than the rule breadth of the plate keel, defined in Ch 1, Sec 3, [10.1.3].

5.2.3 The plating forming the stems is to be supported by horizontal diaphragms spaced not more than 1200 mm apart and connected, as far as practicable, to the adjacent frames and side stringers.

5.2.4 If considered necessary, and particularly where the stem radius is large, a centreline stiffener or web of suitable scantlings is to be fitted.

5.3 Bar stems

5.3.1 The gross area of bar stems constructed of forged or rolled steel is to be not less than the value obtained, in cm², from the following formulae:

$$A_P = \left(0{,}40 + \frac{10T}{L}\right)(0{,}009L^2 + 20)\sqrt{k} \quad \text{for } L \le 90$$

$$A_P = \left(0{,}40 + \frac{10T}{L}\right)(1{,}8L - 69)\sqrt{k} \quad \text{for } 90 < L \le 200$$

where the ratio T/L in the above formulae is to be taken not less than 0,05 or greater than 0,075.

5.3.2 The gross thickness t_B of the bar stem is to be not less than the value obtained, in mm, from the following formula:

$$t_B = (0{,}4L + 13)\sqrt{k}$$

5.3.3 The cross-sectional area of the stem may be gradually tapered from the load waterline to the upper end, where it may be equal to the two thirds of the value as calculated above.

5.3.4 The lower part of the stem may be constructed of cast steel subject to the examination by the Society; where necessary, a vertical web is to be fitted for welding of the centre keelson.

5.3.5 Welding of the bar stem with the bar keel and the shell plating is to be in accordance with Pt B, Ch 13, Sec 3, [5.6] of the Ship Rules.

6 Transverse thrusters

6.1 Scantlings of the thruster tunnel and connection with the hull

6.1.1 The thickness of the tunnel is to be not less than that of the adjacent hull plating.

6.1.2 When the tunnel is not welded to the hull, the connection devices are examined by the Society on a case-by-case basis.

Section 12 Aft Part

Symbols

a_{Z1} : Reference value of the vertical acceleration, defined in Ch 1, Sec 5, [3.6]

B : Moulded breadth, in m, taken equal to the greatest moulded breadth measured amidships at the maximum draught T

g : Gravity acceleration, in m/s^2, taken equal to 9,81

h_1 : Reference value of the ship relative motion defined in Ch 1, Sec 5, [3.5]

k : Material factor as defined in Pt B, Ch 4, Sec 1, [2.2] of the Ships Rules

ℓ : Span, in m, of ordinary stiffeners

L : Rule length, in m, as defined in Ch 1, Sec 1, [3.2.6]

L_2 : L, but to be taken not greater than 120 m

p_S, p_W : Still water pressure and wave pressure defined in [2.3]

R_y : Minimum yield stress, in N/mm^2, of the material, to be taken equal to:

R_y = 235/k, unless otherwise specified

s : Spacing, in m, of ordinary stiffeners

T : Maximum draught, in m, as defined in:

- Ch 1, Sec 1, [3.2.11] for site condition
- Ch 1, Sec 1, [3.2.12] for transit condition

x, y, z : X, Y and Z co-ordinates, in m, of the calculation point with respect to the reference co-ordinate system defined in Ch 1, Sec 1, [3.3]

β_b , β_s : Coefficients defined in Ch 1, Sec 8, [3.4.2]

Δ : Moulded displacement, in tonnes, at draught T, in sea water (density ρ = 1,025 t/m^3)

ρ : Sea water density, in t/m^3, to taken equal to 1,025

ρ_L : Density, in t/m^3, of the liquid cargo.

1 General

1.1 Application

1.1.1 The requirements of this Section apply for the scantlings of structures located aft of the after peak bulkhead, if any.

1.1.2 The aft part of the unit is defined in Ch 1, Sec 1, [3.2.8].

The aft part may differ in site and transit conditions.

1.1.3 Aft peak structures which form vertical watertight boundary between two compartments not intended to carry liquids, and which do not belong to the outer shell, are to be subjected to lateral pressure in flooding conditions. Their scantlings are to be determined according to the relevant criteria in Ch 1, Sec 7 to Ch 1, Sec 9.

1.2 Connections of the aft part with structures located fore of the after peak bulkhead

1.2.1 Tapering

Adequate tapering is to be ensured between the scantlings in the aft part and those fore of the after peak bulkhead. The tapering is to be such that the scantling requirements for both areas are fulfilled.

1.3 Net scantlings

1.3.1 As specified in Ch 1, Sec 3, [7.1], all scantlings referred to in this Section are net, i.e. they do not include any margin for corrosion.

Gross scantlings are obtained as specified in Ch 1, Sec 3, [7.2].

2 Aft peak

2.1 Partial safety factors

2.1.1 The partial safety factors to be considered for checking aft peak structures are specified in:

- Ch 1, Sec 7, Tab 1 for plating
- Ch 1, Sec 8, Tab 1 for stiffeners
- Ch 1, Sec 9, Tab 4 for primary supporting members.

2.1.2 Finite element analysis

When a finite element analysis, as defined in Ch 1, Sec 9, [3.5], is performed in order to verify the scantlings of the aft peak structure, the hull girder loads do not need to be considered.

2.2 Load point

2.2.1 Unless otherwise specified, lateral pressure is to be calculated at:

- the lower edge of the elementary plate panel considered, for plating
- mid-span, for stiffeners.

2.3 Load model

2.3.1 General

The still water and wave lateral pressures in intact conditions are to be considered. They are to be calculated as specified in [2.3.2] for the elements of the outer shell and in [2.3.3] for the other elements.

Still water pressure (p_S) includes:

- the still water sea pressure, defined in Tab 1
- the still water internal pressure due to liquids or ballast, defined in Tab 3
- the still water internal pressure due to dry uniform cargoes on deck, defined in Tab 4.

Wave pressure (p_W) includes:

- the wave pressure, defined in Tab 1
- the inertial internal pressure due to liquids or ballast, defined in Tab 3
- the still water internal pressure due to dry uniform cargoes on deck, defined in Tab 4.

Table 1 : Still water and wave pressures

Location	Still water sea pressure p_S, in kN/m²	Wave pressure p_W, in kN/m²
Bottom and side below the waterline: $z \le T$	$\rho g (T - z)$	$\rho g h_1 e^{\frac{-2\pi(T-z)}{L}}$
Side above the waterline: $z > T$	0	$\rho g (T + h_1 - z)$ without being taken less than $0{,}15\varphi_1 \varphi_2 L$
Exposed deck	Pressure due to the load carried**(1)**	$17{,}5\ n\ \varphi_1 \varphi_2$

(1) The pressure due to the load carried is to be defined by the Designer and, in any case, it may not be taken less than $10\varphi_1 \varphi_2$ kN/m². The Society may accept pressure values lower than $10\ \varphi_1 \varphi_2$ kN/m² when considered appropriate on the basis of the intended use of the deck.

Note 1:

φ_1 : Coefficient defined in Tab 2

φ_2 : Coefficient taken equal to:

- if $L \ge 120$ m: $\varphi_2 = 1$
- if $L < 120$ m: $\varphi_2 = L/120$

Table 2 : Coefficient for pressure on exposed decks

Exposed deck location	φ_1
Freeboard deck	1,00
Top of lowest tier	0,75
Top of second tier	0,56
Top of third tier	0,42
Top of fourth tier	0,32
Top of fifth tier	0,25
Top of sixth tier	0,20
Top of seventh tier	0,15
Top of eighth tier and above	0,10

Table 3 : Still water and wave internal pressures due to liquids

Still water pressure p_S, in kN/m²	Inertial pressure p_W, in kN/m²
$\rho\, g\, (z_L - z)$	$\rho\, a_{Z1}\, (z_{TOP} - z)$
Note 1: z_{TOP} : Z co-ordinate, in m, of the highest point of the tank z_L : Z co-ordinate, in m, of the highest point of the liquid: $z_L = z_{TOP} + 0,5\,(z_{AP} - z_{TOP})$ z_{AP} : Z co-ordinate, in m, of the moulded deck line of the deck to which the air pipes extend, to be taken not less than z_{TOP}.	

Table 4 : Still water and inertial internal pressures due to dry uniform cargoes

Still water pressure p_S, in kN/m²	Inertial pressure p_W, in kN/m²
The value of p_S is, in general, defined by the Designer: in any case it may not be taken less than 10 kN/m². When the value of p_S is not defined by the Designer, it may be taken, in kN/m², equal to 6,9 h_{TD}, where h_{TD} is the compartment 'tweendeck height at side, in m.	$p_S \frac{a_{Z1}}{g}$

2.3.2 Lateral pressures for the elements of the outer shell

The still water and wave lateral pressures are to be calculated considering separately:

- the still water and wave external sea pressures
- the still water and wave internal pressures, considering the compartment adjacent to the outer shell as being loaded.

If the compartment adjacent to the outer shell is not intended to carry liquids, only the external sea pressures are to be considered.

2.3.3 Lateral pressures for elements other than those of the outer shell

The still water and wave lateral pressures to be considered as acting on an element which separates two adjacent compartments are those obtained considering the two compartments individually loaded.

2.3.4 Lateral pressure in testing conditions

The lateral pressure in testing conditions, p_T , in kN/m², is taken equal to:

- $p_T = p_{ST} - p_S$ for bottom shell plating and side shell plating
- $p_T = p_{ST}$ otherwise

where:

p_{ST} : Still water pressure defined in Ch 1, Sec 5, [6.7]

p_S : Still water sea pressure defined in Ch 1, Sec 5 and calculated for the draught T_1 at which the testing is carried out.

If the draught T_1 is not defined by the Designer, it may be taken equal to the light ballast draught T_B defined in Ch 1, Sec 7, [3.2.2].

3 After peak

3.1 Arrangement

3.1.1 General

The provisions of this Sub article apply to transversely framed after peak structure.

3.1.2 Floors

Solid floors are to be fitted at every frame spacing.

The floor height is to be adequate in relation to the shape of the hull. Where a sterntube is fitted, the floor height is to extend at least above the sterntube. Where the hull lines do not allow such extension, plates of suitable height with upper and lower edges stiffened and securely fastened to the frames are to be fitted above the sterntube.

In way of and near the rudder post, propeller post and rudder horn, if any, floors are to be extended up to the peak tank top and are to be increased in thickness; the increase will be considered by the Society on a case-by-case basis, depending on the arrangement proposed.

Floors are to be fitted with stiffeners having spacing not greater than 800 mm.

3.1.3 Side frames

Side frames are to be extended up to a deck located above the full load waterline.

Side frames are to be supported by one of the following types of structure:

- non-tight platforms, to be fitted with openings having a total area not less than 10% of the area of the platforms
- side girders supported by side primary supporting members connected to deck transverses.

The distance between the above side frame supports is to be not greater than 2,5 m.

3.1.4 Platforms and side girders

Platforms and side girders within the peak are to be arranged in line with those located in the area immediately forward.

Where this arrangement is not possible due to the shape of the hull and access needs, structural continuity between the peak and the structures of the area immediately forward is to be ensured by adopting wide tapering brackets.

Where the after peak is adjacent to a machinery space whose side is longitudinally framed, the side girders in the after peak are to be fitted with tapering brackets.

3.1.5 Longitudinal bulkheads

A longitudinal non-tight bulkhead is to be fitted on the centreline of the ship, in general in the upper part of the peak, and stiffened at each frame spacing.

Where either the stern overhang is very large or the maximum breadth of the peak is greater than 20 m, additional longitudinal wash bulkheads may be required.

3.2 Scantlings

3.2.1 Plating and ordinary stiffeners (side frames)

The net scantlings of plating and ordinary stiffeners are to be not less than those obtained from the formulae in:

- Tab 5 for plating
- Tab 6 for ordinary stiffeners

and not less than the minimum values in the same tables.

Table 5 : Net thickness of plating

Plating location	Net thickness, in mm	Net minimum thickness, in mm**(1)**
Bottom and side	$14{,}9\, c_a c_r s \sqrt{\gamma_R \gamma_m \dfrac{\gamma_{S2} p_S + \gamma_{W2} p_W}{\lambda R_y}}$	$c_F\,(0{,}03\,L + 5{,}5)\,k^{1/2} - c_E$
Inner bottom		$2 + 0{,}017\,L\,k^{1/2} + 4{,}5\,s$
Deck		For strength deck: $2{,}1 + 0{,}013\,L\,k^{1/2} + 4{,}5\,s$
Platform and wash bulkhead		$1{,}3 + 0{,}004\,L\,k^{1/2} + 4{,}5\,s$ for $L < 120$ m $2{,}1 + 2{,}2\,k^{1/2} + s$ for $L \geq 120$ m

(1) L need not be taken greater than 300 m.

Note 1:

c_a : Aspect ratio of the plate panel, equal to:

$$c_a = 1{,}21\sqrt{1 + 0{,}33\left(\frac{s}{\ell}\right)^2} - 0{,}69\frac{s}{\ell}$$

to be taken not greater than 1,0

c_E : Coefficient to be taken equal to:

$c_E = 1$ for $L \leq 65$ m

$c_E = 3 - L/30$ for $65\text{ m} < L < 90$ m

$c_E = 0$ for $L \geq 90$ m

c_F : Coefficient:

$c_F = 0{,}8$ for poop sides

$c_F = 1{,}0$ in other cases

c_r : Coefficient of curvature of the panel, equal to:

$c_r = 1 - 0{,}5\,s / r$

to be taken not less than 0,5

r : Radius of curvature of the panel, in m

λ : Coefficient taken equal to:

- for longitudinally framed plating: $\lambda = \lambda_L$, defined in Ch 1, Sec 7, [3.3.1]
- for transversely framed plating: $\lambda = \lambda_T$, defined in Ch 1, Sec 7, [3.4.1]
- for plating not contributing to the hull girder longitudinal strength: $\lambda = 1$

Table 6 : Net scantlings of ordinary stiffeners

Ordinary stiffener location	Formulae	Minimum value
Bottom, side and deck	Net section modulus, in cm³: $w = \gamma_R \gamma_m \beta_b \frac{\gamma_{S2} p_S + \gamma_{W2} p_W}{m(R_y - \gamma_R \gamma_m \sigma_{X1})} \left(1 - \frac{s}{2\ell}\right) s \ell^2 10^3$	Web net minimum thickness, in mm, to be not less than the lesser of: • $t = 1{,}5\ L_2^{1/3}\ k^{1/6}$ • the net thickness of the attached plating.
	Net shear sectional area, in cm²: $A_{Sh} = 10 \gamma_R \gamma_m \beta_s \frac{\gamma_{S2} p_S + \gamma_{W2} p_W}{R_y} \left(1 - \frac{s}{2\ell}\right) s \ell$	
Platform and wash bulkhead	Net section modulus, in cm³: $w = 3{,}5\ s\ \ell^2\ k\ (z_{TOP} - z_M)$	

Note 1:

m : Boundary coefficient, to be taken equal to:
- m = 12 in general, for stiffeners considered as clamped
- m = 8 for stiffeners considered as simply supported

other values of m may be considered, on a case by case basis, for other boundary conditions

z_M : Z co-ordinate, in m, of the stiffener mid-span

z_{TOP} : Z co-ordinate, in m, of the highest point of the peak tank

σ_{X1} : Hull girder normal stress, taken equal to:
- the value defined in Ch 1, Sec 8, [3.3.5], for stiffeners contributing to the hull girder longitudinal strength
- $\sigma_{X1} = 0$, for stiffeners not contributing to the hull girder longitudinal strength.

3.2.2 Floors

The net thickness of floors is to be not less than that obtained, in mm, from the following formula:

$t_M = 6{,}5 + 0{,}02\ L_2\ k^{1/2}$

3.2.3 Side transverses

The net section modulus w, in cm³, and the net shear sectional area A_{SH}, in cm², of side transverses are to be not less than the values obtained from the following formulae:

$$w = \gamma_R \gamma_m \lambda_b \beta_b \frac{\gamma_{S2} p_S + \gamma_{W2} p_W}{8 R_y} s \ell^2 10^3$$

$$A_{Sh} = 10 \gamma_R \gamma_m \lambda_s \beta_s \frac{\gamma_{S2} p_S + \gamma_{W2} p_W}{R_y} s \ell$$

λ_b , λ_s : Coefficients defined in Ch 1, Sec 8, [3.4.3].

3.2.4 Side girders

The net section modulus w, in cm³, and the net shear sectional area A_{Sh}, in cm², of side girders are to be not less than the values obtained from the following formulae:

$$w = \gamma_R \gamma_m \beta_b \frac{\gamma_{S2} p_S + \gamma_{W2} p_W}{8 R_y} s \ell^2 10^3$$

$$A_{Sh} = 10 \gamma_R \gamma_m \beta_s \frac{\gamma_{S2} p_S + \gamma_{W2} p_W}{R_y} s \ell$$

3.2.5 Deck primary supporting members

Scantlings of deck primary supporting members are to be in accordance with Ch 1, Sec 9, considering the loads in [2.3].

4 Reinforcements of the bottom and aft areas

4.1 Spread mooring

4.1.1 In case of spread mooring, the Society may request reinforcements according to Ch 1, Sec 11, [3] and Ch 1, Sec 11, [4] for the aft part.

4.2 Turret mooring

4.2.1 In case of turret mooring system, the aft part does not need to be assessed according to Ch 1, Sec 11, [3] and Ch 1, Sec 11, [4].

4.3 Connection of after peak structures with the rudder horn

4.3.1 The connection of after peak structures with the rudder horn, if any, is to be in accordance with Pt B, Ch 11, Sec 3, [3] of the Ship Rules.

4.4 Sternframes

4.4.1 The arrangement, scantlings and connection to the hull structure of the sternframes is to be in accordance with Pt B, Ch 11, Sec 3, [4] of the Ship Rules.

Section 13 Superstructures and Deckhouses

Symbols

B : Moulded breadth, in m, taken equal to the greatest moulded breadth measured amidships at the maximum draught T

C_B : Total block coefficient, equal to:

$$C_B = \frac{\Delta}{1{,}025\,LBT}$$

C_B not to be taken greater than 1

k : Material factor, defined in:

- Pt B, Ch 4, Sec 1, [2.2] of the Ship Rules, for steel
- Pt B, Ch 4, Sec 1, [4.4] of the Ship Rules, for aluminium alloys

L : Rule length, in m, as defined in Ch 1, Sec 1, [3.2.6]

t_C : Corrosion addition, in mm, defined in Ch 1, Sec 3, [8]

x, y, z : X, Y and Z co-ordinates, in m, of the calculation point with respect to the reference co-ordinate system defined in Ch 1, Sec 1, [3.3]

1 General

1.1 Application

1.1.1 The requirements of this Section apply for the scantling of plating and associated structures of front, side and aft bulkheads and decks of superstructures and deckhouses.

1.1.2 The requirements of this Section comply with the applicable regulations of the 1966 International Convention on Load Lines, as amended, with regard to the strength of enclosed superstructures.

1.2 Net scantlings

1.2.1 As specified in Ch 1, Sec 3, [7], all scantlings referred to in this Section are net, i.e. they do not include any margin for corrosion.

The gross scantlings are obtained as specified in Ch 1, Sec 3, [8].

1.3 Definitions

1.3.1 Superstructures

A superstructure is a decked structure on the freeboard deck extending from side to side of the ship or with the side plating not being inboard of the shell plating more than 0,04 B.

1.3.2 Deckhouses

A deckhouse is a decked structure on the freeboard or superstructure deck which does not comply with the definition of a superstructure.

1.4 Connections of superstructures and deckhouses with the hull structure

1.4.1 Superstructure and deckhouse frames are to be fitted as far as practicable as extensions of those underlying and are to be effectively connected to both the latter and the deck beams above.

Ends of superstructures and deckhouses are to be efficiently supported by bulkheads, diaphragms, webs or pillars.

Where hatchways are fitted close to the ends of superstructures, additional strengthening may be required.

1.4.2 Connection to the deck of corners of superstructures and deckhouses is considered by the Society on a case-by-case basis. Where necessary, doublers or reinforced welding may be required.

1.4.3 As a rule, the frames of sides of superstructures and deckhouses are to have the same spacing as the beams of the supporting deck.

Web frames are to be arranged to support the sides and ends of superstructures and deckhouses.

1.4.4 The side plating at ends of superstructures is to be tapered into the bulwark or sheerstrake of the strength deck.

Where a raised deck is fitted, this arrangement is to extend over at least a 3-frame spacing.

1.4.5 When the superstructures are not directly located on the freeboard deck but supported by pillars, a global strength calculation of the structure supporting the superstructures is to be submitted according to methods, standards or codes recognised by the Society.

The lateral pressures on the superstructures are to be calculated as defined in Article [2], considering that:

- when the height of the supporting pillars is equivalent to a standard superstructure height, the lowest tier of the superstructure is to be considered as a second tier of superstructure
- when the height of the supporting pillars is equivalent to two standard superstructure heights, the lowest tier of the superstructure is to be considered as a third tier of superstructure, and so on.

1.5 Structural arrangement of superstructures and deckhouses

1.5.1 Strengthening in way of superstructures and deckhouses

Web frames, transverse partial bulkheads or other equivalent strengthening are to be fitted inside deckhouses of at least 0,5 B in breadth extending more than 0,15 L in length within 0,4 L amidships. These transverse strengthening reinforcements are to be spaced approximately 9 m apart and are to be arranged, where practicable, in line with the transverse bulkheads below.

Web frames are also to be arranged in way of large openings, boats davits and other areas subjected to point loads.

Web frames, pillars, partial bulkheads and similar strengthening are to be arranged, in conjunction with deck transverses, at ends of superstructures and deckhouses.

1.5.2 Strengthening of the raised quarter deck stringer plate

When a superstructure is located above a raised quarter deck, the thickness of the raised quarter deck stringer plate is to be increased by 30% and is to be extended within the superstructure.

The increase above may be reduced when the raised quarter deck terminates outside 0,5 L amidships.

1.5.3 Openings

Openings are to be in accordance with Ch 1, Sec 6, [2].

Continuous coamings are to be fitted above and below doors or similar openings.

1.5.4 Access and doors

Access openings cut in sides of enclosed superstructures are to be fitted with doors made of steel or other equivalent material, and permanently attached.

Special consideration is to be given to the connection of doors to the surrounding structure.

Securing devices which ensure watertightness are to include tight gaskets, clamping dogs or other similar appliances, and are to be permanently attached to the bulkheads and doors. These doors are to be operable from both sides.

Unless otherwise permitted by the Society, doors open outwards to provide additional security against the impact of the sea.

1.5.5 Strengthening of deckhouses in way of lifeboats and rescue boats

Sides of deckhouses are to be strengthened in way of lifeboats and rescue boats and the top plating is to be reinforced in way of their lifting appliances.

1.5.6 Constructional details

Lower tier stiffeners are to be welded to the decks at their ends.

Brackets are to be fitted at the upper and preferably also the lower ends of vertical stiffeners of exposed front bulkheads of engine casings and superstructures or deckhouses protecting pump room openings.

1.5.7 Use of aluminium alloys

Unprotected front bulkheads of first tier superstructures or deckhouses are generally to be built of steel and not of aluminium alloy.

Aluminium alloys may be adopted for front bulkheads of superstructures or deckhouses above the first tier.

2 Design loads

2.1 Side bulkheads of superstructures

2.1.1 Load point

Lateral pressure is to be calculated at:

- the lower edge of the elementary plate panel, for plating
- mid-span, for stiffeners.

2.1.2 Lateral pressure

The lateral pressure is constituted by the still water sea pressure (p_S) and the wave pressure (p_W), defined Ch 1, Sec 5, [5].

Moreover, when the side is a tank boundary, the lateral pressure constituted by the still water internal pressure (p_S) and the inertial pressure (p_W), defined in Ch 1, Sec 5, [6.3], is also to be considered.

2.2 Side and end bulkheads of deckhouses and end bulkheads of superstructures

2.2.1 Load point

Lateral pressure is to be calculated at:

- mid-height of the bulkhead, for plating
- mid-span, for stiffeners.

2.2.2 Lateral pressure

The lateral pressure to be used for the determination of scantlings of front, side and aft bulkheads of deckhouses and of front and aft bulkheads of superstructures is to be obtained, in kN/m², from the following formula:

$p = 10\ n\ a\ c\ [b\ f - (z - T)]$

without being less than p_{min}

where:

a : Coefficient defined in Tab 1

b : Coefficient defined in Tab 2

c : Coefficient taken equal to:

$$c = 0,3 + 0,7\frac{b_1}{B_1}$$

For exposed parts of machinery casings, c is to be taken equal to 1

b_1 : Breadth of the superstructure or deckhouse, in m, at the position considered, to be taken not less than 0,25 B_1

B_1 : Actual maximum breadth of unit on the exposed weather deck, in m, at the position considered

f : Coefficient defined in Tab 3

n : Navigation coefficient, defined in Ch 1, Sec 5, [3.2.5]

p_{min} : Minimum lateral pressure defined in Tab 4.

Table 1 : Lateral pressure for superstructures and deckhouses - Coefficient a

Type of bulkhead	Location	a	a maximum
Unprotected front	Lowest tier	$2 + \frac{L}{120}$	4,5
	Second tier	$1 + \frac{L}{120}$	3,5
	Third tier	$0,5 + \frac{L}{150}$	2,5
	Four tier	$0,9\left(0,5 + \frac{L}{150}\right)$	2,25
	Fifth tier and above	$0,8\left(0,5 + \frac{L}{150}\right)$	2,0
Protected front	Lowest, second and third tiers	$0,5 + \frac{L}{150}$	2,5
	Four tier	$0,9\left(0,5 + \frac{L}{150}\right)$	2,25
	Fifth tier and above	$0,8\left(0,5 + \frac{L}{150}\right)$	2,0
Side **(1)**	Lowest, second and third tiers	$0,5 + \frac{L}{150}$	2,5
	Four tier	$0,9\left(0,5 + \frac{L}{150}\right)$	2,25
	Fifth tier and above	$0,8\left(0,5 + \frac{L}{150}\right)$	2,0
Aft end	All tiers, when x/L ≤ 0,5	$0,7 + \frac{L}{1000} - 0,8\frac{x}{L}$	$1 - 0,8\frac{x}{L}$
	All tiers, when x/L > 0,5	$0,5 + \frac{L}{1000} - 0,4\frac{x}{L}$	$0,8 - 0,4\frac{x}{L}$

(1) Applicable only to side bulkheads of deckhouses

Table 2 : Lateral pressure for superstructures and deckhouses - Coefficient b

Location of bluckhead **(1)**	b
$\frac{x}{L} \le 0,45$	$1 + \left(\frac{\frac{x}{L} - (0,45)}{C_B + 0,2}\right)^2$
$\frac{x}{L} > 0,45$	$1 + 1,5\left(\frac{\frac{x}{L} - (0,45)}{C_B + 0,2}\right)^2$
(1) For deckhouse sides, the deckhouse is to subdivided into parts of approximatively equal length, not exceeding 0,15L each, and x is to be taken as the co-ordinate of the center of each part considered **Note 1:** C_B : Block coefficient with: $0,6 \le C_B \le 0,8$	

Table 3 : Lateral pressure for superstructures and deckhouses - Coefficient f

Length L of ship, in m	f
$L < 150$	$\frac{L}{10}e^{-L/300} - \left[1 - \left(\frac{L}{150}\right)^2\right]$
$150 \le L < 300$	$\frac{L}{10}e^{-L/300}$
$L \ge 300$	11,03

Table 4 : Minimum lateral pressure for superstructures and deckhouses

Location and type of bulkhead	P_{min}, in kN/m²
Lowest tier of unprotected fronts	$30 \le 25,0 + 0,10\,L \le 50$
Elsewhere: • if $z \le T + 0,5\,B\,A_R + 0,5\,h_w$ • if $T + 0,5\,B\,A_R + 0,5\,h_w < z$ and $z \le T + 0,5\,B\,A_R + h_w$ • if $z > T + 0,5\,B\,A_R + h_w$	 $15 \le 12,5 + 0,05\,L \le 25$ linear interpolation 2,5
Note 1: A_R : Roll amplitude, in rad, defined in Ch 1, Sec 5, [3.4.5] or taken equal to 0,35 for unit less than 65 m in length h_w : Wave parameter, in m, defined in Ch 1, Sec 5	

2.3 Decks

2.3.1 The lateral pressure for the determination of deck scantlings is constituted by the still water internal pressure (p_S) and the inertial pressure (p_W), defined in Ch 1, Sec 5, [6.5].

Moreover, when the deck is a tank boundary, the lateral pressure constituted by the still water internal pressure (p_S) and the inertial pressure (p_W), defined in Ch 1, Sec 5, [6.3], is also to be considered.

3 Plating

3.1 Front, side and aft bulkheads

3.1.1 Plating of side bulkheads of superstructures

The net thickness of plating of side bulkheads of superstructures is to be determined in accordance with the applicable requirements of Ch 1, Sec 7, considering the lateral pressure defined in [2.1.2].

3.1.2 Plating of side and end bulkheads of deckhouses and of end bulkheads of superstructures

The net thickness of plating of side and end bulkheads of deckhouses and of end bulkheads of superstructures is to be not less than the value obtained, in mm, from the following formula:

$$t = 0,95\,s\sqrt{kp} - t_c$$

where:

p : Lateral pressure, in kN/m², defined in [2.2.2].

For plating which forms tank boundaries, the net thickness is to be determined in accordance with [3.1.1], considering the hull girder stress equal to 0.

This net thickness is to be not less than:

- the values given in Tab 5 for steel superstructures,
- the following values for aluminium superstructures:
  - 4 mm for rolled products
  - 2,5 mm for extruded products.

Table 5 : Minimum thicknesses of superstructures and deckhouses

Location	Minimum thickness, in mm
Lowest tier **(1)**	$(5 + 0,01\ L)\ k^{1/2} - t_c$
Second tier and above **(2)**	$(4 + 0,01\ L)\ k^{1/2} - t_c$
(1) L is to be taken not greater than 300 m **(2)** L is to be taken not less than 100 m and not greater than 300 m.	

3.2 Decks

3.2.1 The net thickness of deck plating is to be determined in accordance with the applicable requirements of Ch 1, Sec 7.

3.2.2 For decks sheathed with wood, the net thickness obtained from [3.2.1] may be reduced by 10 percent.

4 Ordinary stiffeners

4.1 Front, side and aft bulkheads

4.1.1 General

The net scantlings of ordinary stiffeners are to be determined according to:

- [4.1.2] for single span vertical ordinary stiffeners of deckhouses side and end bulkheads and of superstructures end bulkheads
- Ch 1, Sec 8 for all the other cases.

4.1.2 Ordinary stiffeners of side and end bulkheads of deckhouses and of end bulkheads of superstructures

The net section modulus of ordinary stiffeners of side and end bulkheads of deckhouses and of end bulkheads of superstructures is to be not less than the value obtained, in cm3, from the following formula:

$$w = 0,35\ \varphi\ k\ s\ \ell^2\ p\ (1 - \alpha\ t_c) - \beta\ t_c$$

where:

ℓ : Span of the ordinary stiffener, in m, equal to the 'tweendeck height and to be taken not less than 2 m

p : Lateral pressure, in kN/m², defined in [2.2.2]

s : Spacing, in m, of ordinary stiffeners

α , β : Parameters defined in Tab 6

φ : Coefficient depending on the stiffener end connections, and taken equal to:

- 1 for lower tier stiffeners
- value defined in Tab 7 for stiffeners of upper tiers.

The section modulus of side ordinary stiffeners need not be greater than that of the side ordinary stiffeners of the tier situated directly below taking account of spacing and span.

For ordinary stiffeners of plating forming tank boundaries, the net scantlings are to be determined in accordance with [4.1.1], considering the hull girder stress equal to 0.

Table 6 : Coefficient α and β

Type of ordinary stiffeners	α	β
Flat bars	0,035	2,8
Flanged profiles	0,060	14,0
Bulb profiles:		
$w_G \le 200$ cm³	0,070	0,4
$w_G > 200$ cm³	0,035	7,4

Table 7 : Coefficient φ for end connections of stiffeners of supertructures et deckhouses

Coefficient φ	Upper end welded to deck	Bracketed upper end	Sniped upper end
Lower end welded to deck	1,00	0,85	1,15
Bracketed lower end	0,85	0,85	1,00
Sniped lower end	1,15	1,00	1,15

4.2 Decks

4.2.1 The net scantlings of deck ordinary stiffeners are to be determined in accordance with the applicable requirements of Ch 1, Sec 8.

5 Primary supporting members

5.1 Front, side and aft bulkheads

5.1.1 Primary supporting members of side bulkheads of superstructures

The net scantlings of primary supporting members of side bulkheads of superstructures are to be determined in accordance with the applicable requirements of Ch 1, Sec 9.

5.1.2 Primary supporting members of side and end bulkheads of deckhouses and of end bulkheads of supertructures

The net scantlings of primary supporting members of side and end bulkheads of deckhouses and of end bulkheads of superstructures are to be determined in accordance with the applicable requirements of Ch 1, Sec 9, using the lateral pressure defined in [2.2].

5.2 Decks

5.2.1 The net scantlings of deck primary supporting members are to be determined in accordance with the applicable requirements of Ch 1, Sec 9.

Section 14 Other Structures

1 Station keeping

1.1 General

1.1.1 Scope of Classification

The process of the Classification takes place in a procedure defining the interface between the work carried out by the mooring contractor and the one carried out by the shipyard.

The tasks to be carried out by the mooring contractor are detailed in Rule Note NR493 Classification of Mooring Systems for Permanent Offshore Units.

The present Article [1] covers only the part concerning the hull.

1.1.2 Documents to be submitted

The following documents are to be submitted by the mooring designer:

a) specification of Design Limit Operational Conditions (DLOC) (for reference)

b) report of model test

c) mooring calculation

d) design load report (mooring loads

e) design load report (loads on hull)

f) specification of explosion pressure

g) report of hydrodynamic analysis. This report includes loads induced by mooring, including dynamic effect on the buoy in the most severe conditions, and load distribution for fatigue assessment.

Note 1: For items b) to f), information is to be reviewed for the purpose of verification of the mooring interface load only.

1.2 Turret mooring system

1.2.1 General

The supporting structure of the turret is included in the scope of Classification and is part of the hull structure.

The structure supporting the turret mooring system is to be able to withstand the forces generated by the mooring.

1.2.2 Location of the turret mooring system

The turret mooring system may be:

- External

  In this case, the turret may be located aft of the stern or forward of the bow.
- Internal

  In this case, the turret may be located all along the hull, inside the cargo tank area or not.

1.2.3 Longitudinal strength

The longitudinal strength of the hull girder at the location of the turret is to be checked according to Ch 1, Sec 6.

1.2.4 Calculation of the structure supporting the turret

A calculation using finite element method is to be carried out in order to verify the strength of the structure. If the turret is located:

- forward of the bow, externally of the structure:

  A local model is to be made.
- within the forward structure, forward of the cargo tank area:

  As a rule, the structure is to be modelled from the bow to the aft end of the cargo tank No.1. The model may be clamped in way of the transverse bulkhead located at the aft end of the cargo tank No.1.

Note 1: For this calculation, there is no need of model balancing, but the masses are to be modelled as accurately as possible.

- within the cargo tank area:

  As a rule, the model should include the adjacent cargo tanks, forward and aft of the turret area. The model may be clamped at the end of one adjacent cargo tank. The model should be balanced by an adequate procedure (see Ch 1, Sec 9).

1.2.5 Mooring loads

The extreme loads on the structure are to be taken into account for different headings.

As a rule, a heading analysis is mandatory as defined in Ch 1, Sec 4, [5.3.3]. Depending on the heading analysis results, load case d) may be disregarded for yield and buckling checks subject to the Society approval.

At least three headings are to be taken into account: 0°, 45°, 90° (or maximum heading from hydrodynamic analysis, not less than 60°, with associated mooring forces).

Other headings may be requested by the Society, based on the design of the structure supporting the turret.

The turret is supported in the unit by a system of bearings.

The reaction forces in way of the bearings are to be distributed according to the design load report procedure. If this distribution is not specified, the reaction force is to be distributed according to Fig 1, i.e. over an 120° angle, with a cosine distribution.

Figure 1 : Heading for turret

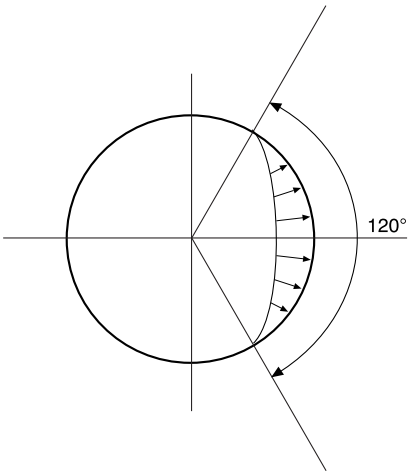

1.3 Spread mooring system

1.3.1 General

The structure supporting the equipment of the mooring system (as defined in NR493, Classification of Mooring Systems for Permanent Offshore Units) are included in the scope of Classification and are considered as part of the hull structure.

The structure supporting the equipment of the mooring system is to be able to withstand the extreme mooring loads and fatigue forces.

1.3.2 Calculation of the supporting structure

A calculation using the finite element method is to be carried out in order to verify the strength of the structure for the forces submitted by the mooring designer. The extension and balancing of the model is to be agreed by the Society.

1.4 Calculations

1.4.1 Corrosion additions

The structure should be modelled in net scantlings.

The corrosion addition t_c, in mm, for each exposed side of plates is not to be less than 1 mm.

In case of disconnectable system, the corrosion addition in areas of friction, chocks, etc., may be increased at the Society satisfaction.

1.4.2 Load cases

The structural model is to take into account the following loads:

- Mooring loads

  Mooring loads are to be determined in extreme conditions and are to be distributed according to the designer recommendation and to NR493, Appendix 3
- Hull girder loads

  Hull girder loads to be taken into account are those with a probability level of $10^{-8.7}$, if relevant
- Local external loads, if relevant, i.e. sea pressures, liquid pressures (ballast and cargo) with accelerations given in Ch 1, Sec 4, including:
  - upright ship condition
  - inclined ship condition
- Internal loads

  The calculation is to be carried out for at least the two following draughts:
  - minimum draught
  - maximum draught.

Design loading conditions defined in Tab 1 may be used as a guidance.

Table 1 : Guidance for design loading conditions for mooring system

Load case	System condition	Design loads			Basic allowable stress factor α **(3)**
		Mooring line loads	Fairlead angles (see Fig 2)	Environment to be considered	
Design / Installation	Mooring line installation load on fairlead sheave	One mooring line with installation load **(1)** Other mooring lines with pretension	Installation angles	1 year return period	α = 0,8
Design / Intact	Normal operation	Design tension on each mooring line	• Wrap angle range: θ_{min} : pretension θ_{max}: to be determined by mooring analysis (default value: 90°) • Pivot angle range: β_{min}, β_{max}: according to manufacturer specification **(2)**	100 years return period	α = 0,8
Design / Damaged	One broken mooring line	One mooring line broken Other lines with design tension (mooring analysis with one line broken to be considered)	• Wrap angle range: θ_{min} : pretension θ_{max}: to be determined by mooring analysis (default value: 90°) • Pivot angle range: β_{min}, β_{max}: according to manufacturer specification **(2)**	100 years return period	α = 0,8
Accidental	Minimum Breaking Load (MBL) on one mooring line	One mooring line with MBL Adjacent lines with intact design tension	• Wrap angle range: θ_{min} : pretension θ_{max}: to be determined by mooring analysis (default value: 90°) • Pivot angle range: β_{min}, β_{max}: according to manufacturer specification **(2)**	100 years return period	α = 1,0

(1) The installation design load is defined as the greater of:
- 1,33 times the SWL of the considered equipment
- the brake load of the winch or the holding capacity of the jacking system used for tensioning.

(2) The maximum values of β obtained by mooring analysis may also be used.

(3) As defined in Pt B, Ch 3, Sec 3, [5]. Factor α is given in this Table as an indication of safety level for each design loading condition.

Note 1: For each load case, wave loads are to be combined as follows:
- maximum draft with adjacent empty capacities and load case a+ (hogging equilibrium)
- minimum draft with adjacent fully loaded and load cases a- and b (sagging equilibrium).

Figure 2 : Wrap (θ) and pivot (β) angle definition

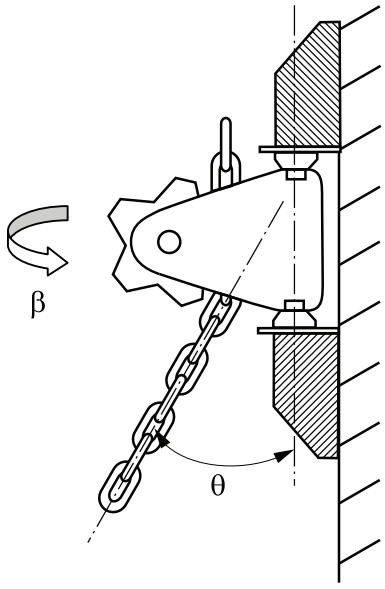

1.4.3 Checking criteria

Allowable stresses are those given in Pt B, Ch 3, Sec 3, [5].

Buckling is to be checked according to Pt B, Ch 3, Sec 3, [6].

For fatigue analysis, the damage ratio is to be not greater than those given in Ch 1, Sec 10, Tab 1.

1.4.4 Materials and testing

For the steel grade selection, the structure supporting the equipment of the mooring system is considered as offshore area (see Ch 1, Sec 3).

2 Supports for hull attachments and appurtenances

2.1 General

2.1.1 The present Article [2] is applicable to all major supports for hull attachments, such as:

- topsides
- risers and their protectors
- flare tower (see [2.1.4])
- lifting appliances (see [2.1.5])
- offloading stations
- helideck
- boat landing platforms / stairtowers.

2.1.2 The structure supporting the attachments is to be able to withstand the forces calculated for static, towing, operation and damage conditions. They are to be calculated by the constructing shipyard or attachment designer.

As a general rule, the affected supporting structure under the deck or inboard the side shell is to be considered as offshore area as defined in Ch 1, Sec 3, [1.1]. The strength assessment is to cover also the ship areas adjacent to the offshore areas as deemed necessary.

Cut outs in local structure in way of hull attachments are to be closed by full collar plates.

2.1.3 As a rule, the forces are to be calculated by the designer in the following four conditions:

- static conditions,with $\alpha = 0,6$
- design conditions, with $\alpha = 0,8$
- transit towing conditions, with $\alpha = 0,8$
- accidental cases, with $\alpha = 1,0$

where:

α : Basic allowable stress factor defined in Pt B, Ch 3, Sec 3, [5].

2.1.4 Flare tower foundation

For flare tower foundation, design loading conditions defined in Tab 2 may be used as a guidance.

2.1.5 Lifting appliances foundations

For lifting appliances foundations, design loading conditions defined in Ship Rules Pt E, Ch 8, Sec 4 are to be considered.

Table 2 : Guidance for design loading conditions for flare tower foundation

Load case	System condition	Environment to be considered	Design loads	Basic allowable stress factors **(1)**
Design	On site intact hull condition	100 year return period	Hull girder loads for each considered loading condition. Local loads including: interface loads, internal and external pressures	$\alpha = 0,8$
Design	Transit	10 year return period		$\alpha = 0,8$
Accidental	On site damaged hull condition giving the maximum trim and heel	1 year return period		$\alpha = 1,0$

(1) As defined in Pt B, Ch 3, Sec 3, [5]. Factor α is given in this Table as an indication of safety level for each design loading condition.

Note 1: In case flare tower foundation is located at short distance from other appurtenance items such as adjacent stools and mooring equipment, the interface effects from these items are to be considered.

2.2 Calculations

2.2.1 Finite element calculation

A three-dimensional finite element model of the support structure is to be submitted. A fine mesh of construction details is required.

The extension of the model is to be agreed by the Society.

2.2.2 Load cases

The model is to take into account:

- the design hull girder still water bending moment
- the wave induced bending moment at relevant probability level and, where relevant, the wave induced global hull shear force, according to Ch 1, Sec 5, [3.3]
- the forces generated by the support structure on the hull.

2.2.3 Checking criteria

Allowable stresses are those given in Pt B, Ch 3, Sec 3, [5].

Buckling is to be checked according to Pt B, Ch 3, Sec 3, [6].

For fatigue analysis, the damage ratio is to be not greater than the values given in Ch 1, Sec 10, Tab 1.

2.2.4 Materials

For the steel grade selection, the top side support seat areas are considered as offshore unit specific area (see Ch 1, Sec 3).

2.2.5 Corrosion additions

The structure is to be modelled in net scantlings.

Corrosion additions, as defined in Ch 1, Sec 3, [8] are to be considered as a minimum.

3 Helicopter deck

3.1 General

3.1.1 Application

The requirements of this Article apply to areas equipped for the landing and take-off of helicopters with landing gears or landing skids and located on a deck or on a platform permanently connected to the hull structure.

Helicopter deck or platform intended for the landing of helicopters having landing devices other than wheels or skids are to be examined by the Society on a case-by-case basis.

3.1.2 Arrangement

The requirements for the arrangement of helidecks are given in Pt B, Ch 3, Sec 4, [4].

3.1.3 Structure

The requirements for the structure of helidecks are given in the present Article.

The scantlings of the structure of an helicopter deck or platform, obtained according to [3.4] to [3.6] are to be considered in addition to scantlings obtained from other applicable loads, in particular from sea pressures.

3.1.4 Net scantlings

As specified in Ch 1, Sec 3, [7], all scantlings referred to in this section are net, i.e. they do not include any margin for corrosion.

The gross scantlings are obtained as specified in Ch 1, Sec 3, [8].

3.2 Design principle

3.2.1 General

Local deck strengthening is to be fitted at the connection of diagonals and pillars supporting platform.

3.2.2 Partial safety factors

The partial safety factors to be considered for checking helicopter decks and platforms structures are specified in Tab 3.

Table 3 : Helicopter decks and platforms - Partial safety factors

Partial safety factors covering uncertainties regarding:	Partial safety factors			
	Symbol	Plating	Ordinary stiffeners	Primary supporting members
Still water pressure	γ_{S2}	1,00	1,00	1,00
Wave pressure	γ_{W2}	1,20	1,20	1,10

3.3 Design loads

3.3.1 Emergency landing load

The emergency landing force F_{EL} transmitted through one landing gear or one extremity of skid to the helicopter deck or platform is to be obtained, in kN, from the following formula:

$F_{EL} = 1,25\ g\ W_H$

where:

g : Gravity acceleration, in m/s²: g = 9,81 m/s²

W_H : Maximum weight of the helicopter, in t.

3.3.2 Garage load

Where a garage zone is fitted in addition to the landing area, the still water and inertial forces transmitted trough each landing gear or each landing skid to the helicopter deck or platform are to be obtained, in kN, as specified in Tab 4, where M is to be taken equal to:

- for helicopter with landing gears:
  M is the landing gear load, in t, to be specified by the Designer. If the landing gear load is not known, M is to be taken equal to:

  $$M = \frac{1,25}{n} W_H$$

  where n is the total number of landing gears
- for helicopter with landing skids:
  $M = 0,5\ W_H$

3.3.3 Unprotected area

When helicopters are parked in an unprotected area, sea pressures on deck, as per Ch 1, Sec 5, [5.3.2], are to be considered simultaneously with the loads defined in [3.3.2].

3.3.4 Specific loads for helicopter platforms

The still water and inertial forces applied to an helicopter platform are to be determined, in kN, as specified in Tab 5.

Table 4 : Helicopters - Still water and inertial forces

Ship condition	Load case	Still water force F_S and inertial force F_W, in kN	
Still water **(1)**		$F_S = M\ g$	
Upright (positive heave motion) **(1)**	"a"	No inertial force	
	"b"	$F_{W,Z} = \alpha\ M\ a_{Z1}$	in z direction
Inclined (negative roll angle) **(1)**	"c"	$F_{W,Y} = M\ C_{FA}\ a_{Y2}$	in y direction
	"d"	$F_{W,Z} = \alpha\ M\ C_{FA}\ a_{Z2}$	in z direction

(1) This condition defines the force, applied by one landing gear or landing skid, to be considered for the determination of scantlings of plating, ordinary stiffeners and primary supporting members, where:

α : Coefficient taken equal to 0,5

a_{X1}, a_{Z1}, a_{Z1}: Reference values of the accelerations in the upright ship condition, defined in Sec 5, [3.6]

a_{X2}, a_{Y2}, a_{Z2}: Reference values of the accelerations in the inclined ship condition, defined in Sec 5, [3.6]

C_{FA} : Combination factor, to be taken equal to:

- C_{FA} = 0,7 for load case "c"
- C_{FA} = 1,0 for load case "d"

Table 5 : Helicopter platforms - Still water and inertial forces

Ship condition	Load case	Still water force F_S and inertial force F_W, in kN	
Still water condition		$F_S = (W_H + W_P)\ g$	
Upright condition	"a"	No inertial force	
	"b"	$F_{W,X} = (W_H + W_P)\ a_{X1} + 1,2\ A_{HX}$	in x direction
		$F_{W,Z} = (W_H + W_P)\ a_{Z1}$	in z direction
Inclined condition (negative roll angle)	"c"	$F_{W,Y} = C_{FA}\ (W_H + W_P)\ a_{Y2} + 1,2\ A_{HY}$	in y direction
	"d"	$F_{W,Z} = C_{FA}\ (W_H + W_P)\ a_{Z2}$	in z direction

Note 1:

A_H : Area, in m², of the entire landing area

A_{HX}, A_{HY} : Vertical areas, in m², of the helicopter platform in x and y directions respectively. Unless otherwise specified, A_{HX} and A_{HY} may be taken equal to $A_H/3$

W_p : Structural weight of the helicopter platform, in t, to be evenly distributed, and to be taken not less than the value obtained from the following formula: $W_p = 0,2\ A_H$

3.4 Plating

3.4.1 Load model

The following forces P_0 are to be considered independently:

- $P_0 = F_{EL}$
  where F_{EL} is the force corresponding to the emergency landing load, as defined in [3.3.1]
- $P_0 = \gamma_{s2} F_s + \gamma_{w2} F_{w,z}$
  where F_s and $F_{w,z}$ are the forces corresponding to the garage load, as defined in [3.3.2] and [3.3.3], if applicable.

3.4.2 Net thickness of plating

The net thickness of an helicopter deck or platform subjected to forces defined in [3.4.1] is not to be less than the value obtained in mm, from the following formula:

$$t = 0,9 C_{WL} \sqrt{\frac{n P_0 k}{\lambda}}$$

where:

C_{WL} : Coefficient to be taken equal to:

$$C_{WL} = 2,15 - 0,05\frac{\ell}{s} + 0,02\left(4 - \frac{\ell}{s}\right)\alpha^{0,5} - 1,75\alpha^{0,25}$$

where:

ℓ/s is to be taken not greater than 3

$$\alpha = \frac{A_T}{\ell s}$$

A_T : Tyre or skid print area, in m².

For helicopter with skids in emergency landing case, only the extremity of skid of 0,3 m x 0,01 m is to be considered.

For other cases, where the print area A_T is not specified by the Designer, the following values are to be taken into account:

- for one tyre: 0,3 m x 0,3 m
- for one skid: 1 m x 0,01 m

ℓ : Length, in m, of the longer side of the plate panel

s : Length, in m, of the shorter side of the plate panel

n : Number of wheels on the plate panel, taken equal to:

- 1 in the case of a single wheel
- the number of wheels in a group of wheels

in the case of double or triple wheels

λ : For longitudinally framed plating:

$\lambda = \lambda_L$ as defined in Ch 1, Sec 11, [3.4.1]

For transversely framed plating:

$\lambda = \lambda_T$ as defined in Ch 1, Sec 7, [3.4.1]

and taken equal to 1 in the particular case of a platform.

3.4.3 Helicopter with skids

For helicopters with skids, in the particular case where $v > \ell$, v being equal to the skid length, the skid print outside of the plate panel is to be disregarded. The load and the print area to be considered are to be reduced accordingly. (see Fig 3).

Figure 3 : Skid print with v > ℓ

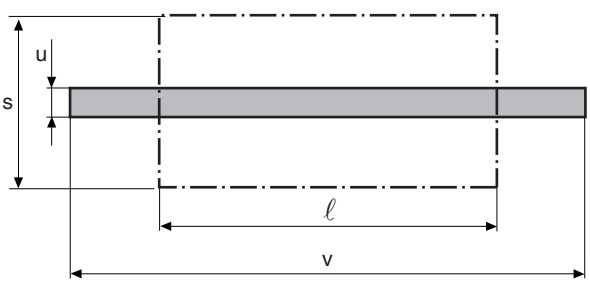

3.5 Ordinary stiffeners

3.5.1 Load model

The following forces P_0 are to be considered independently:

- $P_0 = F_{EL}$
  where F_{EL} is the force corresponding to the emergency landing load, as defined in [3.3.1]
- $P_0 = \gamma_{s2} F_s + \gamma_{w2} F_{w,z}$
  where F_s and $F_{w,z}$ are the forces corresponding to the garage load, as defined in [3.3.2] and [3.3.3], if applicable
- $P_0 = \gamma_{s2} F_s + \gamma_{w2} F_{w,z}$
  for an helicopter platform, where F_s and $F_{w,z}$ are the forces defined in [3.3.4].

3.5.2 Normal and shear stresses

The normal stress σ and the shear stress τ induced by forces defined in [3.5.1] in an ordinary stiffener of an helicopter deck or platform are to be obtained, in N/mm², according to:

$$\sigma = \frac{P_0 \ell}{mW} 10^3 + \sigma_{X1,Wh}$$

$$\tau = \frac{10 P_0}{A_{Sh}}$$

where:

m : Coefficient to be taken equal to:
- m = 6, in the case of an helicopter with wheels
- m = 10, in the case of an helicopter with landing skids.

In addition, in both cases of helicopter with wheels and helicopter with landing skids, the hull girder stresses $\sigma_{X1,Wh}$ are to be taken equal to 0 in the particular case of an helicopter platform.

3.5.3 Checking criteria

It is to be checked that the normal stress σ and the shear stress τ calculated according to [3.5.2] are in compliance with the following formulae:

$$\frac{R_y}{\gamma_R \gamma_m} \geq \sigma$$

$$0{,}5 \frac{R_y}{\gamma_R \gamma_m} \geq \tau$$

where:

γ_m : Partial safety factor covering uncertainties on the material, to be taken equal to 1,02

γ_R : Partial safety factor covering uncertainties on the resistance, to be taken equal to:
- $\gamma_R = 1{,}02$ for garage load
- $\gamma_R = 1{,}00$ for emergency landing load.

3.6 Primary supporting members

3.6.1 Load model

The following loads are to be considered independently:

- emergency landing load, as defined in [3.3.1]
- garage load, as defined in [3.3.2] and [3.3.3], if applicable
- for an helicopter platform, specifics loads as defined in [3.3.4].

The most unfavorable case, i.e. where the maximum number of landing gears is located on the same primary supporting members, is to be considered.

3.6.2 Normal and shear stresses

In both cases of helicopter with wheels and helicopter with landing skids, the normal stress σ and the shear stress τ induced by loads defined in [3.6.1] in a primary supporting member of an helicopter deck or platform are to be obtained as follows:

- for analyses based on finite element models:
  $\sigma = \max(\sigma_1, \sigma_2)$ and $\tau = \tau_{12}$
  where σ_1, σ_2 and τ_{12} are to be obtained according to Ch 1, Sec 9, [6.2]

- for analyses based on beam models:
  $\sigma = \sigma_1$ and $\tau = \tau_{12}$
  where σ_1 and τ_{12} are to be obtained according to Pt B, Ch 7, App 1, [5.2] of the Ship Rules.

In addition, the hull girder stresses are to be taken equal to 0 in the particular case of an helicopter platform.

3.6.3 Checking criteria

It is to be checked that the normal stress σ and the shear stress τ calculated according to [3.6.2] are in compliance with the following formulae:

$$\frac{R_y}{\gamma_R \gamma_m} \geq \sigma$$

$$0,5\frac{R_y}{\gamma_R \gamma_m} \geq \tau$$

where:

γ_m : Partial safety factor covering uncertainties on the material, to be taken equal to 1,02

γ_R : Partial safety factor covering uncertainties on the resistance, to be taken equal to:
- $\gamma_R = 1,02$ for garage load
- $\gamma_R = 1,00$ for emergency landing load.

4 Hull outfitting

4.1 Bulwarks and guard rails

4.1.1 Bulwarks and guard rails are to comply with the requirements of Pt B, Ch 12, Sec 2 of the Ship Rules.

4.1.2 In case of large bulwarks, a direct calculation (including fatigue calculations) may be requested by the Society.

4.2 Towing foundation

4.2.1 The towing foundation is to be in accordance with Pt B, Ch 2, Sec 3, [4.2] and Pt B, Ch 3, Sec 3, [5.4].

5 Launching appliances

5.1 Deck ordinary stiffeners in way of launching appliances used for survival craft or rescue boat

5.1.1 Deck structure in way of such appliances is to be considered as ship area and is to fulfil the requirements of:
- Ch 1, Sec 8, [2.4] for ordinary stiffeners
- Ch 1, Sec 9, [2.3] for primary supporting members.

Section 15 Local Structural Improvements

1 Protection of hull metallic structures

1.1 General

1.1.1 Protection system

It is the responsibility of the party applying for classification to choose the system that will perform the protection of the structure against corrosion.

A protection system is composed of using one or a combination of the following methods:

- application of protective coatings
- cathodic protection
- selection of material.

It is also the responsibility of the party applying for classification to have the system applied in accordance with the manufacturer's requirements.

1.1.2 Protection methods

The protection methods, the design of corrosion protection systems is to be in accordance with the requirements of Part B, Chapter 3.

1.2 Plan for the corrosion

1.2.1 An overall plan for the corrosion protection of the structure is to be prepared and submitted to the Society, in accordance with the provisions of Part B, Chapter 3.

The plan for the corrosion is to cover the following areas of the structure:

- all external areas (submerged, splash zone,...)
- internal areas (ballast, storage tanks,...).

The plan for the corrosion is to take into account:

- the intended duration of operations and conditions of maintenance
- the particular conditions in each area.

In case of a converted unit the plan for the corrosion is also to take into account the initial conditions of structure (unless renewed during conversion work).

1.3 Thickness increments

1.3.1 Thickness increments are to be in accordance with the requirements of Ch 1, Sec 3, [8.2].

2 Post welding treatment

2.1 Scope

2.1.1 General

In normal design and building conditions, post welding treatments are not applied.

The decisions to apply a post welding treatment may be required for specific hot spots, on a case-by-case basis, where the damage ratio is closed to the limit and in case of repair.

2.1.2 Conditions of application

Full penetration welding is to be adopted. Post welding treatment of partial penetrations is not accepted.

The post welding treatment procedure is to be performed according to a recognized standard and approved by the Society.

2.1.3 Mechanical post welding treatment

The following mechanical post welding treatments are accepted:

- grinding
- shot peening
- needle peening
- ultrasonic peening.

In principle, hammer peening is not accepted.

2.1.4 Thermal post welding treatment

The following thermal post welding treatments are accepted:

- TIG refusion
- plasma refusion.

2.2 Grinding of welds for fatigue life improvement

2.2.1 General

The purpose of grinding is to smoothly blend the transition between the plate and the weld face.

Grinding is generally to be burr grinding. However other techniques of grinding may be considered by the Society on a case by case basis.

2.2.2 Grinding practice

The burr radius r is generally to be taken greater than 0,6 t, where t is the plate thickness at the weld toe being ground.

In general, grinding must extend to a depth below any visible undercut. However, the grinding depth d, in mm, is to be not greater than:

- $d = 1$ mm for $t \geq 14$
- $d = 0{,}07\ t$ for $10 \leq t < 14$

where t is the plate thickness, in mm, at the weld toe being ground.

For plate thickness less than 10 mm, grinding is generally not allowed.

After grinding, the weld is to be inspected by the yard quality control in order to check that the finished ground surface is as smooth as possible, with no visible evidence of the original weld toe or undercut or any grinding marks at right angles to the weld toe line. In addition, the Society may require measurements of the remaining thickness in way of the ground weld.

2.2.3 Grinding procedure

The grinding procedure required in Ch 1, Sec 10, [4.3.3] is to specify the following items:

- weld preparation
- grinding tool used
- position of the tool over the weld toe
- location of weld toe on which grinding is applied
- extent of grinding at the ends of attachments
- final weld profile
- final examination technique, including NDE.

2.3 Fatigue resistance assessment

2.3.1 General

These treatments improve the weld toe and the residual stresses leading to an increase of the S-N curve class.

The post weld S-N curve may have a different slope than the as welded S-N curve.

2.3.2 Assessment

The fatigue lifetime of the treated details is to be assessed taking into account the modified S-N curves. The used S-N curves are to be duly justified, by fatigue tests or by a recognized standard.

2.3.3 Experimental S-N curves

When tests are considered to determine the S-N curve, the test program has to be approved by the Society.

Attention is to be paid to the necessary number of samples, and the distribution of the results along the stress range axis to allow a correct determination of the S-N curve slope and standard deviation.

To be homogeneous with the Rules for as welded joints, the design curve will correspond to a curve, at minus 2 standard deviations, and taking into account confidence intervals of the calculated mean and standard deviation.

3 Accidental loads

3.1 Analysis

3.1.1 A risk analysis should be performed to assess the risk of explosion, collision and dropped objects.

3.1.2 As a rule, when finite element analysis are performed, the structural model for the calculations is to be built on net scantlings, as defined in Ch 1, Sec 3, [7].

3.2 Protection to explosions

3.2.1 The verification of the hull structures with respect to explosions are to comply with requirements defined in Pt B, Ch 3, Sec 9, [2].

3.3 Collision

3.3.1 The verification of the hull structures with respect to collision are to comply with requirements defined in Pt B, Ch 3, Sec 9, [3] as applicable for minor or major collisions.

3.4 Dropped objects

3.4.1 The verification of the hull structures with respect to dropped objects are to comply with requirements defined in Pt B, Ch 3, Sec 9, [4].

Section 16 Access, Openings, Ventilation and Venting of Spaces in the Storage Area

1 Access, openings and ventilation

1.1 General

1.1.1 Unless otherwise specified in the present Chapter, access to cofferdams, ballast tanks, cargo tanks, and other compartments in the storage area is to be direct from the open deck and such as to ensure their complete inspection. Openings for cargo tank sounding, washing, ventilation, etc., are to be located above the open deck.

1.1.2 Provisions are to be made to ensure efficient ventilation of each of these spaces. Unless otherwise specified in the present Chapter, portable means are permitted for that purpose. Ventilation fans are to be fitted according to [1.3.7].

1.1.3 The requirement of SOLAS Regulation II-1/3-6 is not necessary to be complied with except if the unit is subject to Enhanced Survey Program as specified in IMO Resolution A.744(18) as amended.

1.2 Arrangement of cargo pump rooms

1.2.1 Cargo pump rooms are to be so arranged as to permit free access to all cargo handling valves and facilitate the hoisting of an injured person from the bottom of the space.

1.2.2 Main ladders are not to be fitted vertically, unless justified otherwise by the size of the cargo pump room.

Rest platforms are to be provided at suitable intervals not more than 10 m in height apart. Ladders are to be fitted with handrails and are to be securely attached to the unit's structure.

1.2.3 Where cargo pumps, ballast pumps and stripping pumps are driven by a machinery which is located outside the cargo pump room, the following arrangement are to be provided:

- drive shafts are to be fitted with flexible couplings or other means suitable to compensate for any misalignment
- the shaft bulkhead or deck penetration is to be fitted with a gas-tight gland of a type approved by the Society. The gland is to be sufficiently lubricated from outside the pump room and so designed as to prevent overheating. The seal parts of the gland are to be of material that cannot initiate sparks
- temperature devices are to be fitted for bulkhead shaft glands, bearings and pump casings.

1.2.4 To discourage personnel from entering the cargo pump room when the ventilation is not in operation, the lightening in the cargo pump room is to be interlocked with ventilation such that ventilation is to be in operation to energize the lightening.

Failure of the ventilation system is not to cause the lightening to go out; emergency lightening, if fitted, is not to be interlocked.

1.2.5 A system for continuous monitoring the concentration of hydrocarbon gases shall be fitted. Sampling points or detector heads shall be located in suitable positions in order that potentially dangerous leakages are readily detected. When the hydrocarbon concentration reaches a preset level, which shall not be higher than 10% of the lower flammable limit, a continuous audible and visual alarm signal shall be automatically effected in the cargo pump room, engine room, cargo control room and in the central control room to alert personnel to the potential hazard.

1.2.6 All cargo pump rooms shall be provided with bilge level monitoring devices with appropriately located alarms.

High liquid level in the bilges is to activate an audible and visual alarm in the cargo control room and in the central control station.

1.3 Ventilation of cargo pump rooms

1.3.1 Cargo pump rooms are to be provided with a suction type mechanical ventilation system. The ventilation of these rooms is to have sufficient capacity to avoid the accumulation of flammable vapours. The number of changes of air is to be at least 20 per hour, based upon the gross volume of the space. The air ducts are to be arranged so that all of the space is effectively ventilated.

1.3.2 Ventilation ducts are to be so arranged as to avoid air pockets. In particular:

a) The ventilation ducts are to be so arranged that their suction is just above the transverse floor plates or bottom longitudinal in the vicinity of bilges.

b) An emergency intake located about 2,20 m above the pump room lower grating is to be provided. It is to be fitted with a damper capable of being opened or closed from the exposed main deck and lower grating level.

   Ventilation through the emergency intake is to be effective when the lower intakes are sealed off due to flooding in the bilges.

c) The foregoing exhaust system is in association with open grating floor plates to allow the free flow of air.

d) Arrangements involving a specific ratio of areas of upper emergency and lower main ventilator openings, which can be shown to result in at least the required 20 air changes per hour through the lower inlets, can be adopted without the use of dampers. When the lower access inlets are closed then at least 15 air changes per hour should be obtained through the upper inlets.

1.3.3 The ventilation ducts are to be led direct to atmosphere at a safe place on open deck, and are not to pass through gas safe spaces, cargo tanks or slop tanks.

1.3.4 Ventilation exhaust ducts are to discharge upwards in locations at least 8 m from any ventilation intake and opening to gas safe spaces.

Ventilation intakes are to be so arranged as to minimise the possibility of recycling hazardous vapours from ventilation discharge openings.

1.3.5 Protection screens of not more than 13 mm square mesh and fire dampers are to be fitted on ventilation duct intakes and outlets.

1.3.6 Ventilation fans are to be capable of being controlled from outside of cargo pump rooms.

1.3.7 Electric motors driving fans are to be placed outside the ventilation ducts. Ventilation fans are to be of non-sparking type (see Pt C, Ch 4, Sec 1, [3.6.9]).

1.4 Ventilation of pump rooms

1.4.1 Pump rooms other than those considered as equivalent to cargo pump rooms in application of Ch 1, Sec 2, [3.3.2] are to be provided with means of access and ventilation systems at the satisfaction of the Society.

1.4.2 Ventilation of pump rooms containing:

- ballast pumps serving spaces adjacent to cargo or slop tanks, and
- oil fuel pumps,

is to comply with [1.3.1], [1.3.3], [1.3.4], and [1.3.7].

1.5 Cargo compartments

1.5.1 Each cargo tank is to be provided with an access hatch with a clear opening at least equivalent to a circle of 600 mm in diameter.

1.5.2 Covers fitted on all cargo tank openings are to be of sturdy construction, and to ensure tightness for liquid hydrocarbon and water.

1.5.3 Access ladders of cargo tanks are not to be fitted vertically, unless justified otherwise by the size of the tanks.

Rest platforms are to be provided at suitable intervals not more than 10 m in height apart. Ladders are to be fitted with handrails and are to be securely attached to the unit's structure.

1.5.4 The dimensions of vertical access openings in wash tank bulkheads are to be sufficient to allow the passage of one person wearing a self-contained air breathing apparatus. The minimum clear opening is not to be less than 600 mm by 800 mm with a height of not more than 600 mm from the bottom shell plating unless gratings or other footholds are provided.

1.5.5 Aluminium is not permitted for the construction of tank covers. The possible use of reinforced fibreglass covers is to be specially examined by the Society.

1.6 Other compartments

1.6.1 Notwithstanding [1.1.1], access to double bottom tanks is permitted from a pump room, a cargo pump room, a cofferdam or a pipe tunnel or even, under reserve of the agreement of the Society, from a segregated ballast tank.

1.6.2 The pipe tunnels are to comply with the following requirements:

- they are not to communicate with the machinery room where the prime movers of the cargo pumps are located
- provision is to be made for at least two exits to the open deck arranged at a maximum distance from each other. One of these exits fitted with a watertight closure may lead to the cargo pump room.

Where there is permanent access from a pipe tunnel to the cargo pump room, a watertight door complying with the requirements of Pt B, Ch 1, Sec 4 and in addition with the following:

- the watertight door is to be capable of being manually closed from outside the main cargo pump room entrance
- the watertight door is to be kept closed during normal operations of the unit except when access to the pipe tunnel is required.

Note 1: A warning notice is to be affixed to the door in order to avoid to be left open.

Pipes tunnel are to be suitable ventilated.

1.6.3 Horizontal access openings, hatches or manholes are to be of sufficient size to allow the free passage of one person wearing a self-contained air breathing apparatus. The clear opening, unless otherwise authorised by the Society, is to be at least equivalent to a circle of 600 mm in diameter.

1.6.4 The minimum clear opening for vertical access is not to be less than 600 mm by 800 mm, unless otherwise authorised by the Society.

1.6.5 Unless other additional arrangements (considered satisfactory by the Society), are provided to facilitate their access, the double bottom tanks are to be provided with at least two separate means of access, in compliance with [1.1.1] and [1.6.1].

1.6.6 Notwithstanding [1.1.1], access manholes to spaces at the non-manned end of the unit classed as hazardous areas are permitted from an enclosed gas safe space, provided that their closing means are gastight and that a warning plate is provided in their vicinity to indicate that the opening of the manholes is only permitted after checking that there are no flammable gases inside the compartment in question.

1.7 Deck spills

1.7.1 Means are to be provided to keep deck spills away from the accommodation and service areas. This may be accomplished by providing a permanent continuous coaming of a suitable height extending from side to side. refer to Ch 1, Sec 17, [7.5.5] d).

1.7.2 Where gutter bars are installed on the weather decks of units and are extended aft as far as the aft bulkhead of superstructures for the purpose of containing cargo spills on deck, the free surface effects caused by containment of a cargo spill during operations or of unit’s movements and accelerations (considering applicable environmental conditions for operations) are to be considered with respect to the vessel's available margin of positive initial stability (refer to Ch 1, Sec 2, [2.1.2]).

1.7.3 Where the gutter bars installed are higher than 300 mm, they are to be treated as bulwarks with freeing ports arranged and provided with effective closures for use during operations. Attached closures are to be arranged in such a way that jamming is prevented while at sea, enabling the freeing ports to remain effective.

1.7.4 Means are to be provided to drain and collect to a safe location spills on deck.

1.8 Spaces at non-manned end of the unit-air locks

1.8.1 The enclosed spaces located at the non-manned end of the unit, below the forecastle deck, if any, are not considered in general as hazardous areas, provided they are separated by an air lock from hazardous areas on the open deck.

Note 1: Such an agreement is, in general, only permitted for spaces opposite to accommodation block. In case such an agreement is considered for spaces other than the spaces opposite to accommodation block, it is to be specially examined by the Society.

Note 2: attention is drawn to the fact that such an arrangement may not be allowed by certain national regulations.

1.8.2 An air lock is to comprise two steel doors sufficiently gastight spaced at least 1,5 m but not more than 2,5 m apart. The doors are to be of the self-closing type and without any holding back arrangements.

1.8.3 The air lock is to be mechanically ventilated from a gas safe space and maintained at an overpressure of 0,25 mbar minimum compared to the hazardous area on the open weather deck in accordance with the general provisions of Pt C, Ch 4, Sec 3, [5], and at a lower pressure than that maintained in the protected space which is itself to be ventilated by a mechanical ventilation system with an air renewal rate at least 12 changes per hour.

1.8.4 If the spaces opposite to accommodation block, protected by the same air lock, include several rooms, some of the rooms need not be mechanically ventilated if they are separated from the air lock by a mechanically ventilated space and by a self-closing sufficiently gastight steel door.

1.8.5 The air lock may have more than two doors, in which case, the arrangements stated in [1.8.2] relating to the spacing of the internal and external doors are not required. The arrangement of such an air lock is to be to the satisfaction of the Society.

1.8.6 It is reminded that, in accordance with Part C, Chapter 4, the store for paints is to be fitted with certified safe lighting irrespective of their arrangement.

1.8.7 The ventilation system provided for the air lock and the protected space(s) is to be capable of being controlled from outside the air lock and these spaces. A warning plate is to be provided at the entrance of the air lock indicating that the ventilation is to be switched on at least 15 min before entering the space.

An audible and visual alarm is to be provided to indicate that the external door of the air lock is moved from the closed position when the ventilation system of the air lock or the protected space(s) is stopped, or in case of loss of the positive pressure required in [1.8.3], between the hazardous area on the open deck and the protected spaces.

2 Cargo and slop tanks venting, inerting, purging and gas-freeing

2.1 Cargo and slop tanks venting

2.1.1 Principle

Cargo tanks are to be provided with venting systems entirely distinct from the air pipes of the other compartments of the unit. The arrangements and position of openings in the cargo tank deck from which emission of flammable vapours can occur are to be such as to minimise the possibility of flammable vapours being admitted to enclosed spaces containing a source of ignition, or collecting in the vicinity of deck machinery and equipment which may constitute an ignition hazard.

2.1.2 Design of venting arrangements

The venting arrangements are to be so designed and operated as to ensure that neither pressure nor vacuum in cargo tanks exceeds design parameters and be such as to provide for:

a) the flow of the small volumes of vapour, air or inert gas mixtures caused by thermal variations in a cargo tank in all cases through pressure/vacuum valves, and

b) the passage of large volumes of vapour, air or inert gas mixtures during cargo loading and unloading or ballasting

c) a secondary means of allowing full flow relief of vapour, air or inert gas mixtures to prevent overpressure or underpressure in the event of failure of the arrangements in item b). Alternatively, pressure sensors may be fitted in each tank protected by the arrangement required in item b), with a monitoring system in the unit's cargo control room or the position from which cargo operations are normally carried out. Such monitoring equipment is also to provide an alarm facility which is activated by detection of overpressure or underpressure conditions within a tank.

Note 1: A pressure/vacuum breaker fitted on the inert gas main may be utilised as the required secondary means of venting. Where the venting arrangements are of the free flow type and the masthead isolation valve is closed for the unloading condition, the inert gas system will serve as the primary underpressure protection with the pressure/vacuum breaker serving as the secondary means.

2.1.3 Combination of venting arrangements

The venting arrangements in each cargo tank may be independent or combined with other cargo tanks and may be incorporated into the inert gas piping.

Where the arrangements are combined with other cargo tanks, either stop valves or other acceptable means are to be provided to isolate each cargo tank. Where stop valves are fitted, they are to be provided with locking arrangements which are to be under the control of the responsible officer. There is to be a clear visual indication of the operational status of the valves or other acceptable means. Where tanks have been isolated, it is to be ensured that relevant isolating valves are opened before cargo loading or ballasting or discharging of those tanks is commenced. Any isolation must continue to permit the flow caused by thermal variations in a cargo tank in accordance with [2.1.2].

Note 1: Inadvertent closure or mechanical failure of the isolation valves need not be considered in establishing the secondary means of venting cargo tanks required in [2.1.2].

If cargo loading and ballasting or discharging of a cargo tank or cargo tank group is intended, which is isolated from a common venting system, that cargo tank or cargo tank group is to be fitted with a means for overpressure or underpressure protection as required in [2.1.2].

2.1.4 The venting arrangements are to be connected to the top of each cargo tank and are to be self-draining to the cargo tanks under all normal conditions of trim and list of the unit. Where it may not be possible to provide self-draining lines, permanent arrangements are to be provided to drain the vent lines to a cargo tank.

Plugs or equivalent means are to be provided on the lines after the safety relief valves.

2.1.5 Openings for pressure release

Openings for pressure release required by [2.1.2] are to:

a) have as great a height as is practicable above the cargo tank deck to obtain maximum dispersal of flammable vapours but in no case less than 2 m above the cargo tank deck

b) be arranged at the furthest distance practicable but not less than 5 m from the nearest air intakes and openings to enclosed spaces containing a source of ignition and from deck machinery and equipment which may constitute an ignition hazard.

Note 1: The provisions of item a) are not applicable to the pressure/ vacuum breaker fitted on the inert gas main (see Note 1 of [2.1.2]) provided its settings are above those of the venting arrangements required by items a) and b) of [2.1.2].

Note 2: If provided, Anchor windlass and chain locker openings constitute an ignition hazard. They are to be located at the distances required by item b) above.

2.1.6 Pressure/vacuum valves

a) Pressure/vacuum valves are to be set at a positive pressure not exceeding 0,021 N/mm^2 and at a negative pressure not exceeding 0,007 N/mm^2.

Note 1: Higher setting values not exceeding 0,07 N/mm^2 may be accepted in positive pressure if the scantlings of the tanks are appropriate.

b) Pressure/vacuum valves required by [2.1.2] may be provided with a bypass when they are located in a vent main or masthead riser. Where such an arrangement is provided, there are to be suitable indicators to show whether the bypass is open or closed.

c) Pressure/vacuum valves are to be of a type approved by the Society.

d) Pressure/vacuum valves are to be readily accessible.

e) Pressure/vacuum valves are to be provided with a manual opening device so that valves can be locked on open position. Locking means on closed position are not permitted.

2.1.7 Vent outlets

Vent outlets for cargo loading, unloading and ballasting required by [2.1.2] are:

a) to permit:

   1) the free flow of vapour mixtures, or

   2) the throttling of the discharge of the vapour mixtures to achieve a velocity of not less than 30 m/s

b) to be so arranged that the vapour mixture is discharged vertically upwards

c) to be, where the method is by free flow of vapour mixtures, such that the outlet is not less than 6 m above the cargo tank deck or fore and aft gangway if situated within 4 m of the gangway and located not less than 10 m measured horizontally from the nearest air intakes and openings to enclosed spaces containing a source of ignition and from deck machinery and equipment which may constitute an ignition hazard

d) to be, where the method is by high velocity discharge, located at a height not less than 2 m above the cargo tank deck and not less than 10 m measured horizontally from the nearest air intakes and openings to enclosed spaces containing a source of ignition and from deck machinery which may constitute an ignition hazard. These outlets are to be provided with high velocity devices of a type approved by the Society

e) to be designed on the basis of the maximum designed loading rate multiplied by a factor of at least 1,25 to take account of gas evolution, in order to prevent the pressure in any cargo tank from exceeding the design pressure. The Master is to be provided with information regarding the maximum permissible loading rate for each cargo tank and in the case of combined venting systems, for each group of cargo tanks.

Note 1: The height requirements of items c) and d) are not applicable to the pressure/vacuum breaker fitted on the inert gas main (see Note 1 of [2.1.2]) provided its settings are above those of the venting arrangements required by items a) and b) of [2.1.2].

Note 2: If provided, anchor windlass and chain locker openings constitute an ignition hazard. They are to be located at the distances required by items c) and d).

2.1.8 High velocity valves

a) High velocity valves are to be readily accessible.

b) High velocity valves not required to be fitted with flame arresters (see [2.1.9]) are not to be capable of being locked on open position.

2.1.9 Prevention of the passage of flame into tanks

a) The venting system is to be provided with devices to prevent the passage of flame into the cargo tanks. The design, testing and locating of these devices shall be to the satisfaction of the Society for compliance with IMO MSC Circular 677.

Note 1: The above requirement is not applicable to the pressure/ vacuum breaker fitted on the inert gas main (see Note 1 of [2.1.2]) provided its settings are above those of the venting arrangements required by items a) and b) of [2.1.2].

Note 2: Attention is to be provided to additional tests required for detonation flame arrestors located in line.

b) A flame arresting device integral to the venting system may be accepted.

c) Flame screens and flame arresters are to be designed for easy overhauling and cleaning.

2.1.10 Prevention of liquids rising in the venting system

a) Provisions are to be made to prevent liquid rising in the venting system (refer to Ch 1, Sec 18, [6.2]).

b) Cargo tanks gas venting systems are not to be used for overflow purposes.

c) Spill valves are not considered equivalent to an overflow system.

2.1.11 Additional provisions for units fitted with an inert gas system

a) On units fitted with an inert gas system, one or more pressure/vacuum-breaking devices are to be provided to prevent the cargo tanks from being subject to:

   1) positive pressure in excess of the test pressure of the cargo tank if the cargo were to be loaded at the maximum rated capacity and all other outlets are left shut, and

   2) negative pressure in excess of 700 mm water gauge if cargo were to be discharged at the maximum rated capacity of the cargo pumps and the inert gas blowers were to fail.

b) The location and design of the devices referred to in item a) are to be in accordance with requirements [2.1.1] to [2.1.10].

2.2 Cargo and slop tanks inerting, purging and/or gas-freeing crude oil tanks

2.2.1 General

a) Arrangements are to be made for purging and/or gas-freeing of cargo tanks. The arrangements are to be such as to minimise the hazards due to the dispersal of flammable vapours in the atmosphere and to flammable mixtures in a cargo tank. Accordingly, the provisions of [2.2.2] and [2.2.3], as applicable, are to be complied with.

b) The arrangements for inerting, purging or gas-freeing of empty tanks as required in Ch 1, Sec 18, [4] are to be to the satisfaction of the Society and are to be such that the accumulation of hydrocarbon vapours in pockets formed by the internal structural members in a tank is minimized.

c) Ventilation/gas-freeing lines between fans and cargo tanks are to be fitted with means, such as detachable spool pieces, to prevent any back-flow of hydrocarbon gases through the fans when they are not used.

d) Discharge outlets are to be located at least 10 m measured horizontally from the nearest air intake and openings to enclosed spaces with a source of ignition and from deck machinery equipment which may constitute an ignition hazard.

2.2.2 Units provided with an inert gas system

The following provisions apply to units provided with an inert gas system:

a) On individual cargo tanks the gas outlet pipe, if fitted, is to be positioned as far as practicable from the inert gas / air inlet and in accordance with [2.2.2]. The inlet of such outlet pipes may be located either at the deck level or at not more than 1 m above the bottom of the tank.

b) The cross-sectional area of such gas outlet pipe referred to in item a) is to be such that an exit velocity of at least 20 m/s can be maintained when any three tanks are being simultaneously supplied with inert gas. Their outlets are to extend not less than 2 m above deck level.

c) Each gas outlet referred to in item b) is to be fitted with suitable blanking arrangements.

d) The arrangement of inert gas and cargo piping systems is to comply with the provisions of Ch 1, Sec 12, [4.4.7], item f).

e) The cargo tanks are first to be purged in accordance with the provisions of items a) to d) until the concentration of hydrocarbon vapours in the cargo tanks has been reduced to less than 2% by volume. Thereafter, gas-freeing may take place at the cargo tank deck level.

2.2.3 Units not provided with an inert gas system

When the unit is not provided with an inert gas system, the operation is to be such that the flammable vapour is discharged initially:

a) through the vent outlets as specified in [2.1.7], or

b) through outlets at least 2 m above the cargo tank deck level with a vertical efflux velocity of at least 30 m/s maintained during the gas-freeing operation, or

c) through outlets at least 2 m above the cargo tank deck level with a vertical efflux velocity of at least 20 m/s and which are protected by suitable devices to prevent the passage of flame.

When the flammable vapour concentration at the outlet has been reduced to 30% of the lower flammable limit, gas-freeing may thereafter be continued at cargo tank deck level.

3 Cargo tanks vents recovery system (COTVR)

3.1 Application

3.1.1 This Article applies to COTVR systems fitted to boost cargo gas or vapour mixture to the process or low pressure (LP) flare system in lieu of sending them to the standard cargo venting system.

3.2 Scope

3.2.1 The limit of the scope of Classification (without **PROC** notation) is generally downstream the COTVR at the isolation valve referred to in [3.7.4].

3.3 General requirements

3.3.1 The COTVR system is to be designed, constructed and tested to the satisfaction of the Society.

3.3.2 Throughout the present, the term “crude oil tanks” includes also slop tanks and process tanks.

3.3.3 Detailed instruction manuals are to be provided on board, covering the operations, safety and maintenance requirements and occupational health hazards relevant to the COTVR system and its application to the cargo tanks system. The manuals are to include guidance on procedures to be followed in the event of a fault or failure of the COTVR system.

3.3.4 The following documents are to be submitted for review:

- process and Instrumentation diagrams of the COTVR system and of its connection to the cargo tanks system, to the IG system, to the HC blanket gas system, if any, and to the flare system
- cause and effect diagram for the system
- settings of the pressure / vacuum protection devices
- HAZID and HAZOP studies of the system.

3.3.5 Piping, fittings and mechanical parts of this COTVR system are to comply with the relevant requirements of Part C, Chapter 1.

3.3.6 Equipment must be suitable for the hazardous area where they are located.

3.3.7 The COTVR system is to remain within the cargo area.

3.3.8 Depending on findings of the HAZOP studies, the Society may raise additional requirements.

3.4 Capacity

3.4.1 The system is to be capable of boosting cargo tank vents to the process or LP flare system at a rate of at least 125% of the maximum loading capacity of the unit expressed as a flow rate.

3.5 Materials and constructive measures

3.5.1 Those parts of piping, fittings, recovery equipment, blowers, filters, non-return devices and other drain pipes which may be subjected to corrosive action of the gases and/or liquids are to be either constructed of corrosion resistant material or lined with rubber, glass fibre epoxy resin or other equivalent coating material.

3.5.2 Constructive measures are to be taken to minimize the risk of ignition from generation of static electricity by the system itself.

3.6 Particles removal devices

3.6.1 Filters or equivalent devices are to be fitted to minimize the amount of water and other particles carried over to the cargo tanks vents recovery equipment.

3.7 COTVR piping system

3.7.1 Branch piping from each cargo tank should be connected to the COTVR main. This branch piping is to be fitted with either stop valves or equivalent means of control for isolating each tank. Where stop valves are fitted, they are to be provided with locking arrangements which are to be under the control of the responsible officer. There is to be a clear visual indication of the operational status of the valve or other acceptable means. Where tanks have been isolated, it is to be ensured that relevant isolating valves are opened before cargo loading or ballasting or discharging of those tanks is commenced. Any isolation must continue to permit the flow caused by thermal variations in a cargo tanks.

In case of COTVR is connected to the dirty inert gas header, above referred valves may be the ones of the IG system. Isolation mean as per [3.7.3] is nevertheless to be provided.

3.7.2 Piping systems are to be so designed as to prevent the accumulation of cargo or water in the pipelines under all normal conditions.

3.7.3 Arrangements are to be made to ensure an effective isolation of the Vent Recovery Unit from the upstream systems (cargo tanks/cargo venting/Inert gas/HC blanket gas systems). This may consist in a shut-down valve.

3.7.4 Arrangements are to be made to ensure an effective isolation of the Vent Recovery Unit from the downstream systems (process systems/LP flare system). This may consist in a shut-down valve.

3.7.5 The COTVR system is to be so designed that the minimum and maximum pressures which it can exert on any cargo tank will not exceed the test pressures of any cargo tank.

3.8 Instrumentation

3.8.1 A pressure device to regulate the capacity of the recovery equipment or a gas regulating valve is to be fitted.

3.8.2 Devices and alarms are to be provided for continuously recording and indicating:

a) The temperature and pressure upstream the shutdown valve mentioned in [3.7.3] whenever the system is operating

b) The temperature and pressure upstream the shutdown valve mentioned in [3.7.4]

c) The oxygen content of the gas recovery equipment

d) The failure of the blowers

e) The water level in the devices mentioned in [3.6].

3.8.3 The alarms referred to in [3.8.2] are to be fitted in the cargo central station.

3.9 Safeguards

3.9.1 Automatic stop of the blower as well as closing shutdown valves mentioned in [3.7.3]and [3.7.4] is to be arranged in case of:

- High-high pressure in respect to [3.8.2] item a) and b)
- Low-low pressure in respect to [3.8.2] item a) and b)
- High- high temperature in respect to [3.8.2] item a) and b)
- When content of oxygen exceeds 5% in respect to [3.8.2] item c)
- Failure in respect to [3.8.2] item d)
- High level alarm in respect to [3.8.2] item e).

Section 17 Equipment and Safety Particulars

1 General

1.1

1.1.1 The equipment is to comply with the applicable National Rules and, for items covered by classification, with requirements of Part C.

The present Section gives particular requirements to be met in addition to Part C requirements.

2 Hazardous areas

2.1 General

2.1.1 The present Article [2] is applicable to hazardous areas due to cargo storage.

For hazardous areas due to other causes refer to Part C, Chapter 4.

2.1.2 For definitions used in the present Article [2], refer to Pt C, Ch 4, Sec 3.

2.1.3 Attention is drawn on the fact that provisions of IMO Regulations for hazardous areas of oil tankers and liquefied gas carriers, as well as those of the Ship Rules applicable to the same, are applicable to units intended to receive a combination of service and structural type notations including **oil tanker ESP** (or **liquefied gas carrier**) **/ offshore ship**).

2.2 Classification of hazardous areas due to oil storage and offloading

2.2.1 For the purpose of machinery and electrical installations, hazardous areas are classified as in [2.2.2] to [2.2.4].

2.2.2 Hazardous area zone 0 are the interiors of cargo tanks, slop tanks, any pipework of pressure-relief or other venting systems for cargo and slop tanks, pipes and equipment containing the cargo or developing flammable gases or vapours.

2.2.3 Hazardous areas zone 1 are:

a) void spaces adjacent to, above or below, integral cargo tanks

b) hold spaces containing independent cargo tanks

c) cofferdams and permanent (for example, segregated) ballast tanks adjacent to cargo tanks

d) cargo pump rooms

e) enclosed or semi-enclosed spaces, immediately above cargo tanks (for example, between decks) or having bulkheads above and in line with cargo tank bulkheads, unless protected by a diagonal plate acceptable to the Society

f) enclosed or semi-enclosed spaces immediately above cargo pump rooms or above vertical cofferdams adjacent to cargo tanks, unless separated by a gas-tight deck and suitable ventilated

g) spaces, other than cofferdams, adjacent to and below the top of a cargo tank (for example, trunks, passageways and holds)

h) areas on open deck, or semi-enclosed spaces on open deck, within 3 m of any cargo tank outlet, gas, vapour outlet (see Note 1 below), cargo manifold valve, cargo valve, cargo pipe flange, cargo pump room ventilation outlets and cargo tank openings for pressure release provided to permit the flow of small volumes of gas or vapour mixtures caused by thermal variation

Note 1: Such areas are, for example, all areas within 3 m of cargo tank hatches, sight ports, tank cleaning opening, ullage openings, sounding pipes, cargo vapour outlets.

i) areas on open deck, or semi-enclosed spaces on open deck above and in the vicinity of any cargo gas outlet intended for the passage of large volumes of gas or vapour mixture during cargo loading and unloading and ballasting (for example flare facility), within a vertical cylinder of unlimited height and 6 m radius centred upon the centre of the outlet, and within a hemisphere of 6 m radius below the outlet

j) areas on open deck, or semi-enclosed spaces on open deck within 1,5 m of cargo pump room entrances, cargo pump room ventilation inlet, openings into cofferdams or other zone 1 space

k) areas on open deck within 3 m spillage coamings surrounding cargo manifold connections

l) areas on open deck over all the cargo (including all ballast tanks within the cargo tank area) where structures are restricting the natural ventilation and to the full breath of the unit plus 3 m fore and aft of the forward-most cargo tank and aft of the aft-most cargo tank bulkhead, up to a height of 2,4 m above the deck

m) compartments for cargo hoses

n) enclosed or semi-enclosed spaces in which pipes containing cargoes are located.

2.2.4 Hazardous areas zone 2 are:

a) areas of 1,5 m surrounding the zone 1 spaces defined in [2.2.3] item h)

b) spaces 4 m beyond the cylinder and 4 m beyond the sphere defined in [2.2.3] item i)

c) areas in open deck extending to the coaming fitted to keep any spills on deck and away from the accommodation and service areas and 3 m beyond these up to a height of 2,4 m above the deck

d) areas on open deck over all the cargo and slop tanks (including all ballast tanks within the cargo tank area) where unrestricted natural ventilation is guaranteed and to the full breath of the unit plus 3 m fore and aft of the forward-most cargo tank and aft of the aft-most cargo tank bulkhead, up to a height of 2,4 m above the deck, surrounding open or semi-enclosed spaces of zone 1

e) spaces forward of the open deck areas the reference of which is made in [2.2.3] item l) and [2.2.4] item d), below the level of the main deck, and having an opening on to the main deck or at a level less than 0,5 m above the main deck, unless the entrance to such spaces does not face the cargo tank area and, together with all other openings to the spaces, including ventilating system inlets and exhausts, are situated at least 5 m away from the foremost or aftermost cargo tank and at least 10 m measured horizontally away from any cargo tank outlet and gas outlet and the spaces are mechanically ventilated.

3 Ventilation

3.1 General

3.1.1 Requirements of Pt C, Ch 4, Sec 3, [5] are to be complied with.

4 Gas detection system

4.1 General

4.1.1 Portable gas detectors

The following are to be provided:

- at least two portable flammable gas monitoring devices, each capable of accurately measuring a concentration of flammable gas (%LEL)
- at least two portable oxygen content meters.

Alternatively, at least two gas detectors, each capable of measuring both oxygen and flammable vapour concentrations in air (%LEL), are to be provided.

These devices are to be of a type approved by the Society.

4.1.2 Fixed automatic gas detection and alarm system

A fixed automatic gas detection and alarm system is to be provided to the satisfaction of the Society so arranged as to monitor continuously all enclosed areas of the unit in which an accumulation of flammable gas may be expected to occur, and capable of indicating at the main control point by audible and visual means the presence and location of an accumulation.

The same system is to be provided at ventilation inlets to safe areas.

4.1.3 In addition to the provisions of [4.1.1], for units fitted with inert gas systems, at least two portable gas detectors are to be capable of measuring concentrations of flammable vapours in inerted atmosphere. Gas detectors are to be capable of measuring any gas content from 0 to 100% in volume.

4.2 Arrangements for gas measurement in double-hull spaces and double-bottom spaces

4.2.1 In selecting portable instruments for measuring oxygen and flammable vapour concentrations, due attention shall be given to their use in combination with the fixed gas sampling line systems referred to in [4.2.2].

4.2.2 Where the atmosphere in double-hull spaces cannot be reliably measured using flexible gas sampling hoses, such spaces shall be fitted with permanent gas sampling lines. The configuration of gas sampling lines shall be adapted to the design of such spaces.

4.2.3 The materials of construction and dimensions of gas sampling lines shall be such as to prevent restriction. Where plastic materials are used, they shall be electrically conductive.

4.3 Arrangements for fixed hydrocarbon gas detection systems in double-hull and double-bottom spaces of units

4.3.1 In addition to the requirements in [4.1] and [4.2], the units shall be provided with a fixed hydrocarbon gas detection in accordance with Pt C, Ch 4, Sec 5 for measuring hydrocarbon gas concentrations in all ballast tanks and void spaces of double-hull and double-bottom spaces adjacent to the cargo tanks, including the forepeak tank and any other tanks and spaces under the bulkhead deck adjacent to cargo tanks.

Note 1: The term "cargo tanks" in the phrase "spaces adjacent to the cargo tanks" includes slop tanks except those arranged for the storage of oily water only.

Note 2: The term "spaces" in the phrase "spaces under the bulkhead deck adjacent to cargo tanks" includes dry compartments such as ballast pump-rooms and bow thruster rooms and any tanks such as freshwater tanks, but excludes fuel oil tanks.

Note 3: The term "adjacent" in the phrase "adjacent to the cargo tanks" includes ballast tanks, void spaces, other tanks or compartments located below the bulkhead deck located adjacent to cargo tanks and includes any spaces or tanks located below the bulkhead deck which form a cruciform (corner to corner) contact with the cargo tanks.

4.3.2 Units provided with constant operative inerting systems for such spaces need not be equipped with fixed hydrocarbon gas detection equipment.

4.3.3 Notwithstanding the above, cargo pump-rooms subject to the provisions of Ch 1, Sec 16, [1.3] need not comply with the requirements of this paragraph.

4.4 Engineering specifications for fixed hydrocarbon gas detection systems in double-hull and double-bottom spaces of units

4.4.1 General

a) The fixed hydrocarbon gas detection system is to be designed, constructed and tested to the satisfaction of the Society based on performance standards developed by IMO (Msc.1 Circ. 1370).

b) The system is to be comprised of a central unit for gas measurement and analysis and gas sampling pipes in all ballast tanks and void spaces of double-hull and double-bottom spaces adjacent to the cargo tanks, including the forepeak tank and any other tanks and spaces under the bulkhead deck adjacent to cargo tanks.

c) The system may be integrated with the cargo pump-room gas detection system, provided that the spaces referred to in item b) above are sampled at the rate required in [4.4.2], item c) 1). Continuous sampling from other locations may also be considered provided the sampling rate is complied with.

4.4.2 Component requirements

a) Gas sampling lines

1) Common sampling lines to the detection equipment shall not be fitted, except the lines serving each pair of sampling points as required in item 3) below.

2) The materials of construction and the dimensions of gas sampling lines are to be such as to prevent restriction. Where non-metallic materials are used, they shall be electrically conductive. The gas sampling lines shall not be made of aluminium.

3) The configuration of gas sampling lines is to be adapted to the design and size of each space. Except as provided in items 4) and 5) below, the sampling system shall allow for a minimum of two hydrocarbon gas sampling points, one located on the lower and one on the upper part where sampling is required. When required, the upper gas sampling point shall not be located lower than 1 m from the tank top. The position of the lower located gas sampling point shall be above the height of the girder of bottom shell plating but at least 0,5 m from the bottom of the tank and it shall be provided with means to be closed when clogged. In positioning the fixed sampling points, due regard should also be given to the density of vapours of the oil products intended to be transported and the dilution from space purging or ventilation.

4) For units with deadweight of less than 50000 tonnes, the Society may allow the installation of one sampling location for each tank for practical and/or operational reasons.

5) For ballast tanks in the double-bottom, ballast tanks not intended to be partially filled and void spaces, the upper gas sampling point is not required.

6) Means are to be provided to prevent gas sampling lines from clogging when tanks are ballasted by using compressed air flushing to clean the line after switching from ballast to cargo loaded mode. The system shall have an alarm to indicate if the gas sampling lines are clogged.

b) Gas analysis unit

The gas analysis unit shall be located in a safe space and may be located in areas outside the unit's cargo area; for example, in the cargo control room and/or navigation bridge in addition to the hydraulic room when mounted on the forward bulkhead, provided the following requirements are observed:

1) Sampling lines shall not run through gas safe spaces, except where permitted under item 5) below

2) The hydrocarbon gas sampling pipes shall be equipped with flame arresters. Sample hydrocarbon gas is to be led to the atmosphere with outlets arranged in a safe location, not close to a source of ignitions and not close to the accommodation area air intakes

3) Bulkhead penetrations of sample pipes between safe and hazardous areas are to be of a type approved and have same fire integrity as the fire division penetrated. A manual isolating valve, which shall be easily accessible for operation and maintenance, shall be fitted in each of the sampling lines at the bulkhead on the gas safe side

4) The hydrocarbon gas detection equipment including sample piping, sample pumps, solenoids, analysing units etc., shall be located in a reasonably gas-tight cabinet (e.g., fully enclosed steel cabinet with a door with gaskets) which is to be monitored by its own sampling point. At a gas concentration above 30% of the lower flammable limit inside the steel enclosure the entire gas analysing unit is to be automatically shut down; and

5) Where the enclosure cannot be arranged directly on the bulkhead, sample pipes shall be of steel or other equivalent material and without detachable connections, except for the connection points for isolating valves at the bulkhead and analysing unit, and are to be routed on their shortest ways.

c) Gas detection equipment

1) The gas detection equipment is to be designed to sample and analyse from each sampling line of each protected space, sequentially at intervals not exceeding 30 min

2) Means are to be provided to enable measurements with portable instruments, in case the fixed system is out of order or for system calibration. In case the system is out of order, procedures shall be in place to continue to monitor the atmosphere with portable instruments and to record the measurement results

3) Audible and visual alarms are to be initiated in the cargo control room, navigation bridge and at the analysing unit when the vapour concentration in a given space reaches a pre-set value, which shall not be higher than the equivalent of 30% of the lower flammable limit

4) The gas detection equipment shall be so designed that it may readily be tested and calibrated.

5 Electrical installations

5.1 General

5.1.1 Electrical installations for production, storage and offloading surface units are to comply with Part C, Chapter 2 and Part C, Chapter 3.

6 Machinery

6.1 General

6.1.1 As a general rule, internal combustion engines are to be avoided as far as possible inside hazardous areas. Nevertheless, the Society may permit fitting of internal combustion engines inside hazardous areas provided it is satisfied with their safety type accordingly to Pt C, Ch 4, Sec 3, [6].

7 Fire protection

7.1 General

7.1.1 Particular provisions of the present Article are in addition to the provision of Part C which remains applicable, except otherwise justified.

7.1.2 The fire protection of the storage area is to be provided by a fixed foam fire extinguishing system complying with [7.5].

7.1.3 For units fitted with bow or stern cargo transfer installations, refer to [7.2.5] and Ch 1, Sec 18, [7] for the protection of the corresponding zones.

7.2 Passive fire protection

7.2.1 As a general rule, requirements of Part C, Chapter 4 are applicable. Nevertheless, Tab 1 and Tab 2 for fire integrity of bulkheads and decks are to replace Pt C, Ch 4, Sec 4, Tab 1 and Pt C, Ch 4, Sec 4, Tab 2.

Definitions of fire categories of the spaces are those given in Pt C, Ch 4, Sec 4, [1.2.2] item b), plus the following one:

(12) Cargo pump rooms are spaces containing cargo pumps and entrances and trunks to such spaces.

7.2.2 Entrances, air inlets and openings to accommodation spaces, service spaces, control spaces and machinery spaces are not to face the storage area. They are to be located on the transverse bulkhead not facing the storage area or on the outboard side of the superstructure or deckhouse at a distance equal to at least 4% of the unit's length but not less than 3 m from the end of the superstructure or deckhouse facing the storage area. This distance, however, need not exceed 5 m.

7.2.3 The Society may permit access doors in boundary bulkheads facing the storage area or within the 5 m limits specified in [7.2.2], to main cargo stations and to such service spaces as provision rooms, store rooms and lockers, provided they do not give access directly or indirectly to any other spaces containing or provided for accommodation, control stations or service spaces such as galleys, pantries or workshops, or similar spaces containing sources of vapour ignition. The boundary of such space is to be insulated to "A-60" standard, with the exception of the boundary facing the storage area. Bolted plates for the removal of machinery may be fitted within the limits specified in [7.2.2].

Note 1: An access to a deck foam system room (including the foam tank and the control station) can be permitted within the limits mentioned in [7.2.2], provided that the conditions listed in [7.2.3] are satisfied and that the door is located flush with the bulkhead.

7.2.4 Windows and sidescuttles facing the storage area and the sides of the superstructures and deckhouses within the limits specified in [7.2.2] are to be of non-opening type. Such windows and sidescuttles are to be constructed of "A-60" class standard.

Table 1 : Fire integrity of bulkheads separating adjacent spaces

Spaces		(1)	(2)	(3)	(4)	(5)	(6)	(7)	(8)	(9)	(10)	(11)	(12)
Control stations	**(1)**	A-0 [d]	A-0	A-60	A-0	A-15	A-60	A-15	A-60 [e]	A-60	*	A-0	A-60
Corridors	**(2)**		C	B-0	A-0 [b]	B-0	A-60	A-0	A-0 [e]	A-0	*	B-0	A-60
Accommodation spaces	**(3)**			C	A-0 [b]	B-0	A-60	A-0	A-0 [e]	A-0	*	C	A-60
Stairways	**(4)**				A-0 [b]	A-0 [b]	A-60	A-0	A-0 [e]	A-0	*	A-0 [b]	A-60
Service spaces (low risk)	**(5)**					C	A-60	A-0	A-0	A-0	*	B-0	A-60
Machinery spaces of category A	**(6)**						* [a]	A-0 [a]	A-60	A-60	*	A-0	A-0
Other machinery spaces	**(7)**							A-0 [a] [b]	A-0	A-0	*	A-0	A-0
Hazardous areas	**(8)**								–	A-0	*	A-0	A-0
Service spaces (high risk)	**(9)**									A-0 [c]	*	A-0	A-60
Open decks	**(10)**										–	*	*
Sanitary and similar spaces	**(11)**											C	A-60
Cargo pump room	**(12)**												*

[a] : Where the space contains an emergency power source or components of an emergency power source that adjoins a space containing a unit's service generator or the components of a unit's service generator, the boundary bulkheads between those spaces is to be "A-60" class division.

[b] : Except otherwise accepted in Part C, Chapter 4.

[c] : Where spaces are of the same numerical category and superscript (c) appears, a bulkhead of the rating shown in the tables is only required when the adjacent spaces are for a different purpose e.g. in category (i). A galley does not require a bulkhead but a galley next to a paint room requires an "A-0" bulkhead.

[d] : Bulkheads separating the navigating bridge, chartroom and radio room from each other may be "B-0" rating.

[e] : An engineering evaluation is to be conducted in accordance with Pt C, Ch 4, Sec 4, [4.1.1]. In no case the bulkhead or deck rating is to be less than the value indicated in the tables. See Part C, Chapter 4.

Note 1: When an asterisk * appears in the table, the division is required to be of steel or equivalent material but not required to be of "A" class standard. However, where a deck is penetrated for the passage of electric cables, pipes and vent ducts, such penetrations are to be made tight to prevent the passage of flame and smoke.

Table 2 : Fire integrity of decks separating adjacent spaces

Spaces below		Space above											
		(1)	**(2)**	**(3)**	**(4)**	**(5)**	**(6)**	**(7)**	**(8)**	**(9)**	**(10)**	**(11)**	**(12)**
Control stations	**(1)**	A-0	A-0	A-0	A-0	A-0	A-60	A-0	A-0 [e]	A-0	*	A-0	XXX
Corridors	**(2)**	A-0	*	*	A-0	*	A-60	A-0	A-0 [e]	A-0	*	*	XXX
Accommodation spaces	**(3)**	A-60	A-0	*	A-0	*	A-60	A-0	A-0 [e]	A-0	*	*	XXX
Stairways	**(4)**	A-0	A-0	A-0	*	A-0	A-60	A-0	A-0 [e]	A-0	*	A-0	XXX
Service spaces (low risk)	**(5)**	A-15	A-0	A-0	A-0	*	A-60	A-0	A-0	A-0	*	A-0	XXX
Machinery spaces of category A	**(6)**	A-60	A-60	A-60	A-60	A-60	* [a]	A-60	A-60	A-60	*	A-0	XXX
Other machinery spaces	**(7)**	A-15	A-0	A-0	A-0	A-0	A-0 [a]	* [a]	A-0	A-0	*	A-0	XXX
Hazardous areas	**(8)**	A-60 [e]	A-0 [e]	A-0 [e]	A-0 [e]	A-0	A-60	A-0	–	A-0	–	A-0	A-0
Service spaces (high risk)	**(9)**	A-60	A-0	A-0	A-0	A-0	A-60	A-0	A-0	A-0 [c]	*	A-0	XXX
Open decks	**(10)**	*	*	*	*	*	*	*	–	*	–	*	XXX
Sanitary and similar spaces	**(11)**	A-0	A-0		A-0		A-0	A-0	A-0	A-0	*	*	XXX
Cargo pump room	**(12)**	XXX	XXX	XXX	XXX	XXX	A-0	A-0	A-0	A-0	*	–	*

Note 1: Refer to Tab 1
Note 2: "XXX" in the cells indicates that corresponding vicinities are prohibited.

7.2.5 When a loading or offloading connection is provided at the manned end of the unit, entrances, air inlets and openings to accommodation spaces, service and machinery spaces and control stations are not to face the cargo transfer connection location. They are to be located on the outboard side of the superstructure or deckhouse at a distance equal to at least 4% of the unit's length but not less than 3 m from the end of the superstructure or deckhouse facing the connection. This distance, however, need not exceed 5 m.

Sidescuttles facing the connection location and on the side of the superstructure or deckhouse within the distance mentioned above are to be of the non-opening type. In addition, during the use of the transfer arrangements, all doors, ports and other openings on the corresponding superstructure or deckhouse side are to be kept closed.

Air pipes and other openings to enclosed spaces not listed above are to be shielded from any spray which may come from a burst hose or connection.

7.2.6 The location and arrangement of the galleys are to be such that there is a minimum risk of fire.

7.2.7 Air intakes and air outlets of machinery spaces are to be located as far aft as practicable and, in any case, outside the limits specified in [7.2.2].

7.3 Fire water pumps

7.3.1 The requirements of Pt C, Ch 4, Sec 6 relative to fire water pumps and mains are applicable, together with additional requirements of [7.3.2] and [7.3.3].

7.3.2 Within the storage area, isolation valves are to be fitted in the fire main at intervals of not more than 40 m to preserve the integrity of the fire main system in case of fire or explosion.

7.3.3 Operation of a deck foam system at its required output is to permit the simultaneous use of the minimum required number jets of water at the required pressure from the fire main and the process deluge system if any.

7.4 Cargo pump rooms

7.4.1 Each cargo pump room is to be provided with a fixed fire extinguishing system operated from a readily accessible position outside the pump room.

7.4.2 The fixed fire extinguishing system required in [7.4.1] is to be one of the following fixed fire-extinguishing systems operated from a readily accessible position outside the cargo pump room. Cargo pumps room are to be provided with a system suitable for machinery spaces of category A:

- Either a carbon dioxide or another extinguishing medium system complying with the applicable provisions of Pt C, Ch 4, Sec 11, [4] and with the following:
  - the audible signal mentioned in Pt C, Ch 4, Sec 11, [4.1.1] item b)2), if of electrical type, is to be of certified safe type. A light signal is not required but, if it is provided, it is also to be of a certified safe type

    When the audible signal is of pneumatic type, it must not be activated by the fire extinguishing medium but by clean dry air
  - a notice is to be exhibited at the controls stating that, due to the electrostatic ignition hazard, the system is to be used only for fire extinguishing and not for inerting purposes, or
- a high expansion foam system complying with the provisions of Pt C, Ch 4, Sec 11, [5.1.2], provided that the foam concentrate supply is suitable for extinguishing fires involving the cargo stored, or
- a fixed pressure water-spraying system complying with Pt C, Ch 4, Sec 11, [6.1.1] or Pt C, Ch 4, Sec 11, [6.1.2].

7.4.3 Where the extinguishing medium used in the crude oil pump room system is also used in systems serving other spaces, the quantity of medium provided or its delivery rate need not be more than the maximum required for the largest compartment.

7.4.4 Two portable foam extinguishers or equivalent are to be provided for each pump room; one is to be fitted near the pumps and the other near the access to the pump room.

7.5 Fixed deck foam system

7.5.1 Definitions

a) An applicator is a hose and nozzle that can be held and directed by hand.

b) A foam solution is a homogeneous mixture of water and foam concentrate in the proper proportions.

7.5.2 Principles

a) The arrangements for providing foam are to be capable of delivering foam to the entire cargo tank deck area as well as into any cargo tank the deck of which has been ruptured.

b) The deck foam system is to be capable of simple and rapid operation.

c) Operation of a deck foam system at its required output shall permit the simultaneous use of the minimum required number of jets of water at the required pressure from the fire main. Where the deck foam system is supplied by a common line from the fire main, additional foam concentrate shall be provided for operation of two nozzles for the same period of time required for the foam system.

   The simultaneous use of the minimum required jets of water shall be possible on deck over the full length of the ship, in the accommodation spaces, service spaces, control stations and machinery spaces.

Note 1: A common line for fire main and deck foam line can only be accepted if it can be demonstrated that the hose nozzles can be effectively controlled by one person when supplied from the common line at a pressure needed for operation of the monitors.

d) Foam from the fixed foam system is to be supplied by means of monitors and/or deluge system and foam applicators.

e) Foam applicators are to be provided to ensure flexibility of action during fire-fighting operations and to cover areas screened and/or deluge system.

7.5.3 Foam solution – Foam concentrate

a) The supply rate of the foam solution is not to be less than the greatest of the following:
   1) 0,6 l/min/m² of storage deck area, where storage deck area means the maximum breadth of the unit multiplied by the total longitudinal extent of the cargo and slop tank spaces
   2) 6 l/min/m² of the horizontal sectional area of the single tank having the largest such area
   3) 3 l/min/m² of the horizontal sectional area of group of tanks to be protected simultaneously as defined by the worst case fire scenario
   4) if the fixed deck foam system is ensured by an arrangement of monitors, 3 l/min/m² of the area protected by the largest monitor, such area being entirely forward of the monitor, but not less than 1250 l/min.

b) Sufficient foam concentrate is to be supplied to ensure at least 20 min of foam generation on storage units fitted with an inert gas installation or at least 30 min of foam generation on storage units not fitted with an inert gas installation when using solution rates stipulated in item a), whichever is the greatest.

c) When medium expansion ratio foam (between 21 to 1 and 200 to 1 expansion ratio) is employed, the application rate of the foam and the capacity of a monitor installation shall be to the satisfaction of the Society.

d) The water supply to this fixed deck foam system shall be of a quality so that adverse effects on foam formation, stability or performances do not occur.

e) The foam concentrate supplied on board shall be approved by the Society (Refer to the Guidelines for performance and testing criteria and surveys of foam concentrates for fixed fire-extinguishing systems (MSC.1/Circ.1312)) for the cargoes intended to be carried. Type B foam concentrates shall be supplied for the protection of crude oil, petroleum products and non-polar solvent cargoes. Type A foam concentrates shall be supplied for polar solvent cargoes, as listed in the table of chapter 17 of the IBC Code. Only one type of foam concentrate shall be supplied, and it shall be effective for the maximum possible number of cargoes intended to be carried. For cargoes for which foam is not effective or is incompatible, additional arrangements to the satisfaction of the Society shall be provided.

f) Liquid cargoes with a flashpoint not exceeding 60°C for which a regular foam fire-fighting system is not effective are to comply with the provisions of regulation II-2/1.6.2.1 of the SOLAS Convention.

7.5.4 Monitors, nozzles of deluge systems and applicators

a) When an arrangement of monitor is provided, at least 50% of the foam solution supply rate required in items a)1) and a)2) of [7.5.3] is to be delivered from each monitor.

b) When an arrangement of monitor is provided, the capacity of any monitor is to be at least 3 l/min of foam solution per square meter of the deck area protected by that monitor, such area being entirely forward of the monitor. Such capacity is not to be less than 1250 l/min.

c) The capacity of any applicator is to be not less than 400 l/min and the applicator throw in still air conditions is not to be less than 15 m.

Note 1: The flow delivered from one applicator shall be limited by the reaction force at the working pressure that one operator can withstand. As a recommendation, the applicator reaction usually limits the solution flow to about 1150 l/min.

d) The capacity of the deluge system is to be compliant with [7.5.3]item a)3).

e) Foam applicators, nozzles and monitors are to be of type approved by the Society.

f) Prototype tests of the monitors and foam applicators are to be performed to ensure the foam expansion and drainage time of the foam produced does not differ by more than ± 10 per cent from that determined in [7.5.3], item e).

7.5.5 Arrangement and installation

a) The foam concentrate is to be stored in an accessible location unlikely to be damaged in the event of fire or explosion and not having direct opening or exposure to the protected areas.

b) The arrangement of the deck foam system ducting shall be such that a fire or explosion in the protected areas will not affect the foam generating equipment.

c) Monitors

1) The number and position of monitors are to be such as to comply with [7.5.2] item a).

2) The area protected by a monitor is considered located entirely forward of the monitor.

3) The distance from the monitor to the farthest extremity of the protected area forward of that monitor is not to be more than 75% of the monitor throw in still air conditions.

4) A monitor and hose connection for a foam applicator are to be situated both port and starboard at the front of the accommodation spaces facing the storage area. The monitors and hose connections shall be aft of any cargo tanks, but may be located in the cargo area above pump-rooms, cofferdams, ballast tanks and void spaces adjacent to cargo tanks if capable of protecting the deck below and aft of each other.

5) The number of foam applicators provided is not to be less than four. The number and disposition of foam main outlets is to be such that foam from at least two applicators can be directed on to any cargo tank deck area.

d) Deluge systems

1) The number and position of foam nozzles are to be such as to comply with [7.5.2].

2) The foam deluge system may be separated in several sections by means of remote control stop valves.

3) A coaming of a sufficient height is to be provided on the cargo tank deck in order to avoid the spillage of flammable liquids. This coaming should be in line with the fire zones identified during the fire scenario analysis mentioned in [7.5.3] item a)3). See Ch 1, Sec 16, [1.7].

Note 1: For the design of the fire zones, reference is made to the provisions of NFPA 101 and 101A code.

e) Isolation valves are to be provided in the foam main, and in the fire main when this is an integral part of the deck foam system, immediately forward of any monitor position to isolate damage section of those mains.

f) The main control station for the system is to be suitably located outside the storage area, adjacent to the accommodation spaces and readily accessible and operable in the event of a fire in the areas protected.

7.6 Emergency and offloading control station

7.6.1 At least one emergency control station is to be provided, at a suitable manned location outside hazardous areas.
If two emergency control stations are provided, the second one is to be placed at the same location as the loading control station.

7.6.2 Offloading control stations are to be provided with all necessary instruments for safe and easy operation of handling systems, fully independent from instruments necessary for propulsion (if any) and operation of auxiliary engines.
These control stations are to be permanently fitted with:

- indicators showing if remote controlled valves are closed or open
- means of communication with open deck, pump room(s), machinery spaces and control room.

Besides which, indicators showing if valves are closed or open are to be fitted on all locally manoeuvrable valves.

8 Life saving appliances

8.1 Life saving appliances

8.1.1 In addition to requirements of Pt C, Ch 4, Sec 12 applicable for units intended to receive **LSA** additional class notation, lifeboats are to be of a totally enclosed fire resistant type

9 Temporary refuge

9.1 General

9.1.1 Temporary refuge is a facility where the personnel can muster temporarily and prepare for the evacuation of the unit. The emergency response is to be communicated and controlled from the temporary refuge.

9.1.2 At least one main temporary refuge is to be fitted onboard the unit. Depending on the unit dimensions and arrangements of means of escape, the Society may require a secondary refuge.

9.1.3 The main temporary refuge is to be located in the accommodation area, being generally a part of the living quarters. The whole accommodation building may be designed as temporary refuge.

9.1.4 The main temporary refuge is to include the following facilities:

- main muster area
- standby control room
- emergency response centre.

9.1.5 At least two separate means of escape are to be provided to evacuate from the temporary refuge to the deck level and to the helideck. One of these means of escape may be an emergency escape door, to be used only in the case of emergency.

9.1.6 All the doors used for the normal access to the spaces in the main temporary refuge are to be equipped with positive pressurised air locks.

9.1.7 When a secondary refuge is fitted, suitable means of communication with the main temporary refuge are to be provided.

Section 18 Piping Systems

1 General

1.1 Application

1.1.1 Bilge, ballast, scupper, oil fuel, cargo and other piping systems are to comply with the applicable requirements of Part C, Chapter 1 and of other documents referred to in this Chapter; requirements of the present Section are additional ones.

1.1.2 Production piping systems are to comply, in addition to requirements of Article [3], with applicable requirements of NR459, Process Systems on Board Offshore Units and Installations.

1.2 Separation of systems

1.2.1 Piping systems carrying non-hazardous fluids are generally to be separate from piping systems which may contain hazardous fluids. Cross connection of the piping systems may be permitted where means for avoiding possible contamination of the non-hazardous fluid system by the hazardous fluid are provided.

2 Bilge - Ballast - Oil fuel - Scupper lines

2.1 General

2.1.1 Cargo storage tanks are not to be used for ballast purposes except in emergency cases; tanks used for cargo storage are not to be served by the ballasting system of the unit, except as provided for throughout the present Section.

2.1.2 Passage through cargo tanks and slop tanks

a) Unless otherwise specified, bilge, ballast and fuel oil systems serving gas safe spaces located outside the cargo area are not to pass through cargo tanks or slop tanks. They may pass through ballast tanks or void spaces located within the cargo area.

b) Where expressly permitted, ballast pipes passing through cargo tanks are to fulfil the following provisions:

   1) they are to have welded or heavy flanged joints the number of which is to be kept to a minimum

   2) they are of extra reinforced wall thickness as per Pt C, Ch 1, Sec 7

   3) they are adequately supported and protected against mechanical damage.

c) Lines of piping which run through cargo tanks are to be fitted with closing devices.

2.1.3 Unless otherwise specified, bilge, ballast and scupper systems serving spaces or compartments situated within the storage area are to be independent from other systems serving spaces or compartments outside the storage area and are not to lead into such spaces.

2.1.4 Oil fuel piping systems are to be independent from the cargo piping system and, unless otherwise authorised by the Society, independent from the ballast piping system. They are not to led through cargo tanks, slop tanks or process tanks.

2.1.5 As applicable, the forward spaces located forward of the fore cofferdam in gas safe space and, the aftermost spaces located abaft the aft cofferdam in gas safe space, are to be drained in accordance with the applicable requirements of Part C, Chapter 1.

2.1.6 The sea inlets serving the segregated ballast tanks are to be separated from the sea outlets serving the cargo tanks, slop tanks or process tanks.

2.2 Bilge system

2.2.1 Bilge pumps

a) At least one bilge pump is to be provided for draining the spaces located within the cargo area. Cargo pumps or stripping pumps may be used for this purpose.

b) Bilge pumps serving spaces located within the cargo area are to be located in the cargo pump room or in another suitable space within the cargo area.

2.2.2 Draining of pump room

a) Arrangements are to be provided to drain the pump rooms by means of power pumps or bilge ejectors.

Note 1: On units of less than 500 gross tonnage, the pump rooms may be drained by means of hand pumps with a suction diameter of not less than 50 mm.

b) Cargo pumps or stripping pumps may be used for draining cargo pump rooms provided that:
   - a screw-down non-return valve is fitted on the bilge suctions, and
   - a remote control valve is fitted between the pump suction and the bilge distribution box.

c) Bilge pipe diameter is not to be less than 50 mm.

d) The bilge system of cargo pump rooms is to be capable of being controlled from outside.

e) A high level alarm is to be provided. Refer to item d) of Ch 1, Sec 16, [1.2.6].

2.2.3 Draining of tunnels and pump rooms other than cargo pump rooms

Arrangements are to be provided to drain tunnels and pump rooms other than cargo pump rooms. Cargo pumps may be used for this service under the provisions of [2.2.2], item b).

2.2.4 Draining of cofferdams located at the fore and aft ends of the cargo area

a) When they are not intended to be filled with water ballast, cofferdams located at the fore and aft ends of the cargo spaces are to be fitted with drainage arrangements.

b) Aft cofferdams (and/or fore as applicable) adjacent to the cargo pump room may be drained by a cargo pump in accordance with the provisions of [2.2.2], items b) and c), or by bilge ejectors.

c) Drainage of the after cofferdam (and/or fore cofferdam as applicable) from the engine room bilge system is not permitted.

Note 1: On units of less than 500 gross tonnage, cofferdams may be drained by means of hand pumps with a suction diameter of not less than 50 mm

2.2.5 Drainage of cofferdams or void spaces located within the cargo area

Other cofferdams and void spaces located within the cargo area and not intended to be filled with water ballast are to be fitted with suitable means of drainage.

2.3 Ballast tanks within the cargo area

2.3.1 Tanks within cargo area, intended to be used exclusively for ballast, are, according to [2.1.3] and unless otherwise permitted, to be served by piping and pumping systems independent of cargo and fuel oil piping and pumping systems. Ballast systems serving ballast in the cargo area are to be entirely located within the cargo area and are not to be connected to other piping systems.

Note 1: Ballast pumps are to be located in the cargo pump room, or a similar space within the cargo area not containing any source of ignition

Note 2: Where installed in the cargo pump room, ballast pumps are to comply with [3.2.3].

2.3.2 Two distinct pumping means are to be provided for these tanks, one of which at least, is to be mechanically or hydraulically driven or comprising an ejector used exclusively for this purpose. The second may be a portable means.

2.3.3 For emergency deballasting of the segregated ballast tanks located within the storage area, cargo pumps may be used under the following conditions:

- the connection between ballast pumping system and the cargo pump is not to be permanent and to be located as close as possible to the cargo pump suction
- the connection is to comprise a detachable spool piece, a non-return valve to prevent using the pump to fill tanks, and a shut-off valve located on the ballast pipe side.

2.3.4 Where segregated ballast pipes pass through cargo tanks, namely for the application of [2.3.3], they are to be made of steel of reinforced thickness and their connections are to be of the welded type. Connections by means of heavy flanges may nevertheless be permitted provided they are kept to a minimum. Expansion joints are not to be used for that purpose.

Note 1: Sliding type coupling are not to be used for expansion purposes where ballast lines pass through cargo tanks. Expansion bends only are permitted.

2.3.5 For emergency ballasting of the segregated ballast tanks located within the storage area, the use of a pump located outside the storage area is permitted under the conditions that the filling pipe does not pass through cargo tanks and that connection to ballast tanks is made at the top of these tanks and consists in a detachable spool piece and a non-return valve to prevent siphon effects.

2.3.6 Furthermore, for emergency deballasting or ballasting of the segregated ballast tanks located within the storage area, the use of a pump other than a cargo pump is permitted if located within the storage area and if it only serves spaces or compartments located within the storage area.

2.3.7 When the foremost or aftermost cofferdam, located forward or abaft the cargo tanks, are intended for ballasting, they may be emptied by a ballast pump located inside the machinery compartment or the fore spaces whichever the case, provided that the corresponding suction line is directly connected to that pump and not to any of the machinery compartment mains and that the delivery side is directly connected to the unit's side.

2.3.8 Ends of filling pipes serving ballast tanks located within the storage area are to be as near as possible to the bottom of the tanks in order to minimise the risk of generating static electricity.

2.4 Air and sounding pipes

2.4.1

a) The air and sounding pipes fitted to the following spaces:

- cofferdams located at the fore and aft ends of the cargo spaces
- tanks and cofferdams located within the cargo area and not intended for cargo,

are to be led to the open deck.

b) The air pipes referred to in item a) are to be arranged as per Part C, Chapter 1 and are to be fitted with easily removable flame screens at their outlets.

c) In offshore units of 600 tons deadweight and above, the air and sounding pipes referred to in item a) are not to pass through cargo tanks except in the following cases:

1) short lengths of piping serving ballast tanks

2) lines serving double bottom tanks located within the cargo area, except in the case of oil units of 5 000 tons deadweight and above,

where the following provisions are complied with [2.1.2], item b).

2.5 Ballast tanks located outside the storage area (within gas safe zones)

2.5.1 Tanks within gas safe zones, intended to be used exclusively for ballast, are, according to [2.1.3], unless otherwise permitted, to be served by piping and pumping systems independent from piping and pumping systems serving spaces or compartments within the storage area, and corresponding pipes are not to pass through cargo oil or slop tanks.

2.5.2 Requirement [2.5.1] is applicable, without any possible deviation, namely to compartments located abaft (and/or forward as applicable depending on the location of accommodation blocks) the aft (and/or fore) cofferdam.

2.5.3 However, for tanks other than those mentioned in [2.5.2] pumps exclusively dedicated to segregated ballast tanks located within hazardous areas, may be used for ballast tanks located within gas safe zones, on the conditions that there are no common parts in the two circuits other than those needed for this connection to pumps and unit sea chests.

2.5.4 For the emergency deballasting of the ballast tanks located within gas safe zones, other than those covered by [2.5.2], the piping system serving segregated ballast tanks within hazardous areas, may be used, on the condition that the pipe connection to the tank is fitted as near as possible to the tanks by means of a detachable spool piece and a screw-down non return valve preventing the filling of these tanks by this piping system.

2.5.5 Pipes serving ballast tanks located within gas safe zones may, irrespective of the case covered by [2.5.4], pass through cargo tanks, on the condition that [2.3.4] is complied with. Moreover, the thickness of steel pipes is to be at least 16 mm.

2.5.6 Pipes serving ballast tanks located within gas safe zones, other than those covered by [2.5.2], may pass through segregated ballast tanks within hazardous area but expansion joints are not to be used for pipe connections. The possible use of a cargo pump for emergency deballasting of the tanks in question is to be subjected to [2.3.3].

2.5.7 Attention is drawn to the requirements of Part C, Chapter 1 and of other documents referred to in this Chapter relating to the maintenance of the integrity of the watertight subdivision and unit's stability.

2.6 Fore peak ballast system

2.6.1 The fore peak can be ballasted with the system serving ballast tanks within the storage area, provided:

a) the tank is considered as hazardous

b) the vent pipe openings are located on open deck 3 m away from sources of ignition

c) means are provided, on the open deck, to allow measurement of flammable gas concentrations within the tank by a suitable portable instrument

d) the access to the fore peak tank is direct from open deck. Alternatively, indirect access from the open deck to the fore peak tank through an enclosed space may be accepted provided that:
   - in case the enclosed space is separated from the cargo tanks by cofferdams, the access is through a gas tight bolted manhole located in the enclosed space and a warning sign is to be provided at the manhole stating that the fore peak tank may only be opened after:
     - it has been proven to be gas free, or
     - any electrical equipment which is not certified safe in the enclosed space is isolated
   - in case the enclosed space has a common boundary with the cargo tanks and is therefore hazardous, the enclosed space can be well ventilated.

2.7 Carriage of ballast in cargo tanks

2.7.1 Every cargo tank is, in general, to be capable of being filled with sea water.

Note 1: Attention is to be provided on the applicable requirements of the MARPOL 73/78 Annex I convention as amended and IMO MEPC Circular 139 (53) for this operation.

2.7.2 Two shut-off valves, at least, are recommended to isolate cargo piping system from sea chests.

2.7.3 Cargo tanks are to be capable of being stripped by two separate means. Cargo pumps may be used for this purpose if their performance characteristics are suitable.

2.7.4 Provisions are to be made, to the Society's satisfaction, to permit efficient draining of tanks at the end of offloading.

2.7.5 The cargo piping system is to be so designed and arranged as to permit efficient cleaning and draining.

2.7.6 The requirements relating to the possible connections between cargo piping system and segregated ballast tank piping system are given in [2.3] and [2.5].

2.7.7 Emergency ballasting of cargo tank may be made by segregated ballast tank pumps on the condition that the connection is made to the top of the tanks and consists of a detachable spool piece and a screw-down valve to prevent siphon effects. The tank filling line is to end as near as possible to the tank bottom in order to reduce the risk of generating static electricity.

2.8 Scupper lines

2.8.1 The passage of scupper pipes or sanitary discharges through cargo tanks is to be avoided as far as practicable. If this is not possible, the number of these pipes is to be reduced to a minimum.

2.8.2 The portions of scupper pipes and sanitary discharges passing through cargo tanks are to be of steel and are to have only welded joints, the number of which is to be kept to a minimum. Furthermore, their thickness is not to be less than 16 mm.

3 Cargo piping and pumping system

3.1 General

3.1.1 A complete system of pumps and piping is to be fitted for handling the cargo oil. Except where expressly permitted, and namely for the bow and stern cargo loading and unloading, this system is not to extend outside the cargo area and is to be independent of any other piping system on board.

3.2 Cargo pumping system

3.2.1 Number and location of cargo pumps

a) Each cargo tank is to be served by at least two separate fixed means of discharging and stripping. However, for tanks fitted with an individual submerged pump, the second means may be portable.

b) Cargo pumps are to be located:
   1) in a dedicated pump room, or
   2) on deck, or
   3) when designed for this purpose, within the cargo tanks.

3.2.2 Use of cargo pumps

a) Except where expressly permitted in [2.2] and [2.3], cargo pumps are to be used exclusively for handling the liquid cargo and are not to have any connections to compartments other than cargo tanks.

b) Subject to their performance, cargo pumps may be used for tank stripping.

c) Cargo pumps may be used, where necessary, for the washing of cargo tanks.

3.2.3 Cargo pump drive

a) Prime movers of cargo pumps are not to be located in the cargo area, except in the following cases:

1) steam driven machine supplied with steam having a temperature not exceeding 220°C

2) hydraulic motors

3) electric motors of a certified safe type suitable for installation in hazardous area zone 1 as specified in Ch 1, Sec 17, [2.2] with explosion group and temperature class of at least IIA and T3 as per Pt C, Ch 2, Sec 15, [4].

b) Pumps with a submerged electric motor are not permitted in cargo tanks.

c) Where cargo pumps are driven by a machine which is located outside the cargo pump room, the provisions of Ch 1, Sec 16, [1.2.3] are to be complied with.

3.2.4 Design of cargo pumps

a) Materials of cargo pumps are to be suitable for the products carried.

b) The delivery side of cargo pumps is to be fitted with relief valves discharging back to the suction side of the pumps (bypass) in closed circuit. Such relief valves may be omitted in the case of centrifugal pumps with a maximum delivery pressure not exceeding the design pressure of the piping, with the delivery valve closed.

c) Pump casings are to be fitted with temperature sensing devices (see Tab 1).

3.2.5 Monitoring of cargo pumps

Cargo pumps are to be monitored as required in Tab 1.

3.2.6 Control of cargo pumps

Cargo pumps are to be capable of being stopped from:

- a position outside the pump room, and
- a position next to the pumps.

Table 1 : Monitoring of cargo pumps

Equipment, parameter	Alarm(**1**)	Indication(**1**)	Comments
Pump, discharge pressure		L	• on the pump(**2**), or • next to the unloading control station
Pump casing, temperature	H		visual and audible, in cargo control room or pump control station
Bearings, temperature	H		visual and audible, in cargo control room or pump control station
Bulkhead shaft gland, temperature, if relevant	H		visual and audible, in cargo control room or pump control station
(1) H = high, L = low **(2)** and next to the driving machine if located in a separate compartment.			

3.3 Cargo piping design

3.3.1 General

Cargo piping is to be designed and constructed according to the requirements of Pt C, Ch 1, Sec 7.

Cargo piping conveying liquids are to comply with the requirements applicable to piping class I, unless otherwise agreed with the Society.

Cargo piping conveying gases are to comply with the requirements applicable to the following piping classes, unless otherwise agreed with the Society:

- Class I, when p> 1,6 MPa or T > 200 °C
- Class II, otherwise.

3.3.2 Materials

a) For the protection of cargo tanks carrying crude oil and petroleum products having a flash point not exceeding 60°C, materials readily rendered ineffective by heat are not to be used for valves, fittings, cargo vent piping and cargo piping so as to prevent the spread of fire to the cargo.

b) Cargo piping is, in general, to be made of steel or cast iron.

c) Valves, couplings and other end fittings of cargo pipe lines for connection to hoses are to be of steel or other suitable ductile material.

d) Spheroidal graphite cast iron may be used for cargo oil piping within the double bottom or cargo tanks.

e) Grey cast iron may be accepted for cargo oil lines:

   1) within cargo tanks, and

   2) on the weather deck for pressure up to 1,6 Mpa.

It is not to be used for manifolds and their valves of fittings connected to cargo handling hoses.

3.3.3 Connection of cargo pipe length

Cargo pipe lengths may be connected either by means of welded joints or, unless otherwise specified, by means of flange connections.

3.3.4 Expansion joints

a) Where necessary, cargo piping is to be fitted with expansion joints or bends.

b) Expansion joints including bellows are to be of a type approved by the Society.

c) Expansion joints made of non-metallic material may be accepted only inside tanks and provided they are:

   1) of an approved type

   2) designed to withstand the maximum internal and external pressure

   3) electrically conductive.

d) Sliding type couplings are not to be used for expansion purposes where lines for cargo oil pass through tanks for segregated ballast.

3.3.5 Valves with remote control

a) Valves with remote control are to comply with Part C, Chapter 1.

Note 1: All valves provided with a remote control are to be capable of being locally operated.

b) Submerged valves are to be remote controlled. In the case of a hydraulic remote control system, control boxes are to be provided outside the tank, in order to permit the emergency control of valves.

c) Valve actuators located inside cargo tanks are not to be operated by means of compressed air.

3.3.6 Cargo hoses

a) Cargo hoses are to be of a type approved by the Society for the intended conditions of use.

b) Hoses subject to tank pressure or pump discharge pressure are to be designed for a bursting pressure not less than 5 times the maximum pressure under cargo transfer conditions.

c) Unless bonding arrangements complying with Ch 1, Sec 6 are provided, the ohm electrical resistance of cargo hoses is not to exceed 10^6 Ω.

3.4 Cargo piping arrangement and installation

3.4.1 Cargo pipes passing through tanks or compartments

a) Cargo piping is not to pass through tanks or compartments located outside the cargo area.

b) Cargo piping and similar piping to cargo tanks is not to pass through ballast tanks except in the case of short lengths of piping complying with [2.1.2], item b).

c) Cargo piping may pass through vertical fuel oil tanks adjacent to cargo tanks on condition that the provisions of [2.1.2], item b) are complied with.

d) Cargo piping passing through cargo tanks is subject to the provisions of MARPOL 73/78 Convention Annex I Regulation 24 (6) as recommended to be applied by IMO MEPC Circular 406.

3.4.2 Cargo piping passing through bulkheads

Cargo piping passing through bulkheads is to be so arranged as to preclude excessive stresses at the bulkhead. Bolted flanges are not to be used in the bulkhead.

3.4.3 Valves

a) Stop valves are to be provided to isolate each tank.

b) A stop valve is to be fitted at each end of the cargo manifold.

c) When a cargo pump in the cargo pump room serves more than one cargo tank, a stop valve is to be fitted in the cargo pump room on the line leading to each tank.

d) Main cargo oil valves located in the cargo pump room below the floor gratings are to be remote controlled from a position above the floor.

e) Valves are also to be provided where required by the provisions of MARPOL 73/78 Convention Annex I Regulation 24 (5) and (6) as recommended to be applied by IMO MEPC Circular 406.

3.4.4 Prevention of the generation of static electricity

a) In order to avoid the generation of static electricity, the loading pipes are to be led as low as practicable in the tank.

b) Cargo pipe sections and their accessories are to be electrically bonded together and to the unit's hull.

3.4.5 Draining of cargo pumps and cargo lines

Every unit required to be provided with segregated ballast tanks or fitted with a crude oil washing system is to comply with the following requirements:

a) it is to be equipped with oil piping so designed and installed that oil retention in the lines is minimized, and

b) means are to be provided to drain all cargo pumps and all oil lines at the completion of cargo discharge, where necessary by connection to a stripping device. The line and pump draining are to be capable of being discharged both by an external transfer and to a cargo tank or a slop tank. For discharge by external transfer, a special small diameter line having a cross-sectional area not exceeding 10% of the main cargo discharge line is to be provided and is to be connected on the downstream side of the unit's deck manifold valves, both port and starboard, when the cargo is being discharged (see Fig 1).

3.4.6 Cleaning and gas freeing

a) The cargo piping system is to be so designed and arranged as to permit its efficient cleaning and gas-freeing.

b) Requirements for inert gas systems are given in Article [4].

Figure 1 : Connection of small diameter line to the manifold valve

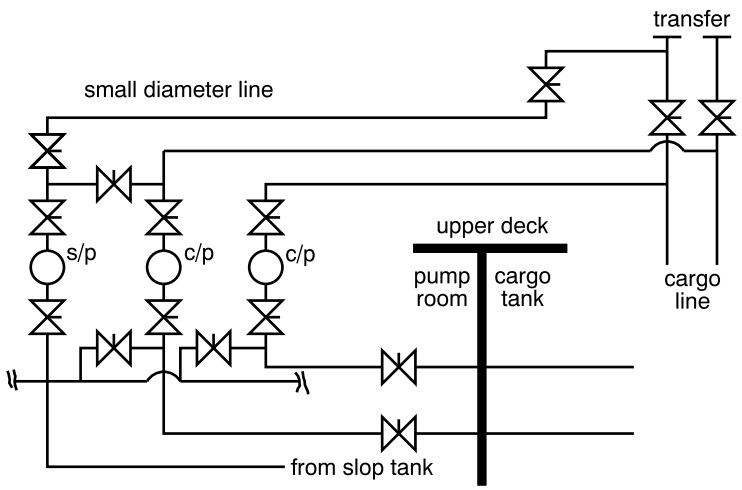

4 Inert gas systems

4.1 Application

4.1.1 Units where an inert gas is required

a) Units (in particular storage units such as FPSO, FSO, FSU...) carrying more than 8000 tons of crude oil in bulk in their tanks are to be fitted with an inert gas system complying with the provisions of this Article or with an equivalent fixed installation.

Note 1: To be considered equivalent, the system proposed in lieu of the fixed inert gas system is to be:

- capable of preventing dangerous accumulation of explosive mixtures in intact cargo tanks during normal service, loading and offloading and necessary in-tank operations, and
- so designed as to minimize the risk of ignition from the generation of static electricity by the system itself.

b) All units operating with a cargo tank cleaning procedure using crude oil washing are to be fitted with an inert gas system complying with the requirements of this Article.

Such system is to be provided in every cargo tank and slop tank.

Units required to be provided with an inert gas system by item a) or b) are to receive the class notation **INERTGAS**.

4.1.2 Units where an inert gas system is not required but provided with the class notation INERTGAS

Inert gas systems provided on units where such systems are not required by [4.1.1] and which are provided with the class notation **INERTGAS** are to comply with the provisions of [4.6].

4.2 Definitions

4.2.1 For the purposes of this Article:

a) Cargo tanks means those cargo tanks, including slop tanks, which carry cargoes, or cargo residues, having a flashpoint not exceeding 60ºC.

b) Inert gas system includes inert gas systems using flue gas, inert gas generators, and nitrogen generators and means the inert gas plant and inert gas distribution together with means for preventing backflow of cargo gases to machinery spaces, fixed and portable measuring instruments and control devices.

c) Gas-safe space is a space in which the entry of gases would produce hazards with regard to flammability or toxicity.

d) Gas-free is a condition in a tank where the content of hydrocarbon or other flammable vapour is less than 1% of the lower flammable limit (LFL), the oxygen content is at least 21%, and no toxic gases are present.

Note 1: Refer to the Revised recommendations for entering enclosed spaces aboard ships (IMO resolution A.1050(27)).

4.3 Requirements for all systems

4.3.1 General

a) The inert gas systems shall be designed, constructed and tested to the satisfaction of the Society. It shall be designed to be capable of rendering and maintaining the atmosphere of the relevant cargo tanks non-flammable.

Note 1: Refer to the Revised standards for the design, testing and locating of devices to prevent the passage of flame into cargo tanks in tankers (MSC/Circ.677, as amended by MSC/Circ.1009 and MSC.1/Circ.1324) and the Revised factors to be taken into consideration when designing cargo tank venting and gas-freeing arrangements (MSC/Circ.731).

b) The system shall be capable of:

1) inerting empty cargo tanks and maintaining the atmosphere in any part of the tank with an oxygen content not exceeding 8% by volume and at a positive pressure in port and at sea except when it is necessary for such a tank to be gas-free;

2) eliminating the need for air to enter a tank during normal operations except when it is necessary for such a tank to be gas-free;

3) purging empty cargo tanks of hydrocarbon or other flammable vapours, so that subsequent gas-freeing operations will at no time create a flammable atmosphere within the tank;

4) delivering inert gas to the cargo tanks at a rate of at least 125% of the maximum rate of discharge capacity of the ship expressed as a volume, and

5) delivering inert gas with an oxygen content of not more than 5% by volume to the cargo tanks at any required rate of flow.

c) Materials used in inert gas systems shall be suitable for their intended purpose. In particular, those components which may be subjected to corrosive action of the gases and/or liquids are to be either constructed of corrosion-resistant material or lined with rubber, glass fibre epoxy resin or other equivalent coating material.

d) The inert gas supply may be:

1) treated flue gas from main or auxiliary boilers, or

2) gas from an oil or gas-fired gas generator, or

3) gas from nitrogen generators.

The Society may accept systems using inert gases from one or more separate gas generators or other sources or any combination thereof, provided that an equivalent level of safety is achieved. Such systems shall, as far as practicable, comply with the requirements of this article. Systems using stored carbon dioxide shall not be permitted unless the Administration is satisfied that the risk of ignition from generation of static electricity by the system itself is minimized.

4.3.2 Safety measures

a) The inert gas system shall be so designed that the maximum pressure which it can exert on any cargo tank will not exceed the test pressure of any cargo tank.

b) Automatic shutdown of the inert gas system and its components parts shall be arranged on predetermined limits being reached, taking into account the provisions of [4.3.4], [4.4.3] and [4.5.14].

c) Suitable shutoff arrangements shall be provided on the discharge outlet of each generator plant.

d) The system shall be designed to ensure that if the oxygen content exceeds 5% by volume, the inert gas shall be automatically vented to atmosphere.

e) Arrangements shall be provided to enable the functioning of the inert gas plant to be stabilized before commencing cargo discharge. If blowers are to be used for gas-freeing, their air inlets shall be provided with blanking arrangements.

f) Where a double block and bleed valve is installed, the system shall ensure upon of loss of power, the block valves are automatically closed and the bleed valve is automatically open.

4.3.3 System components

a) Non-return devices

1) At least two non-return devices shall be fitted in order to prevent the return of vapour and liquid to the inert gas plant, or to any gas-safe spaces.

2) The first non-return device shall be a deck seal of the wet, semi-wet, or dry type or a double-block and bleed arrangement. Two shut-off valves in series with a venting valve in between, may be accepted provided:

- the operation of the valve is automatically executed. Signal(s) for opening/closing is (are) to be taken from the process directly, e.g. inert gas flow or differential pressure; and
- alarm for faulty operation of the valves is provided, e.g. the operation status of “blower stop” and “supply valve(s) open” is an alarm condition.

3) The second non-return device shall be a non-return valve or equivalent capable of preventing the return of vapours and liquids and fitted between the deck water seal (or equivalent device) and the first connection from the inert gas main to a cargo tank. It shall be provided with positive means of closure. As an alternative to positive means of closure, an additional valve having such means of closure may be provided between the non-return valve and the first connection to the cargo tanks to isolate the deck water seal, or equivalent device, from the inert gas main to the cargo tanks.

4) A water seal, if fitted, shall be capable of being supplied by two separate pumps, each of which shall be capable of maintaining an adequate supply at all times. The audible and visual alarm on the low level of water in the water seal shall operate at all times.

5) The arrangement of the water seal, or equivalent devices, and its associated fittings shall be such that it will prevent backflow of vapours and liquids and will ensure the proper functioning of the seal under operating conditions.

6) Provision shall be made to ensure that the water seal is protected against freezing, in such a way that the integrity of seal is not impaired by overheating.

7) A water loop or other approved arrangement shall also be fitted to each associated water supply and drain pipe and each venting or pressure-sensing pipe leading to gas-safe spaces. Means shall be provided to prevent such loops from being emptied by vacuum.

8) Any water seal, or equivalent device, and loop arrangements shall be capable of preventing return of vapours and liquids to an inert gas plant at a pressure equal to the test pressure of the cargo tanks.

9) The non-return devices shall be located in the cargo area on deck.

b) Inert gas lines

1) The inert gas main may be divided into two or more branches forward of the non-return devices required by item a).

2) The inert gas main shall be fitted with branch piping leading to the cargo tank. Branch piping for inert gas shall be fitted with either stop valves or equivalent means of control for isolating each tank. Where stop valves are fitted, they shall be provided with locking arrangements. The control system shall provide unambiguous information of the operational status of such valves to at least the control panel required in [4.3.4].

3) Each cargo tank not being inerted shall be capable of being separated from the inert gas main by:

- removing spool-pieces, valves or other pipe sections, and blanking the pipe ends; or
- arrangement of two spectacle flanges in series with provisions for detecting leakage into the pipe between the two spectacle flanges; or
- equivalent arrangements to the satisfaction of the Society, providing at least the same level of protection.

4) Means shall be provided to protect cargo tanks against the effect of overpressure or vacuum caused by thermal variations and/or cargo operations when the cargo tanks are isolated from the inert gas mains.

5) Piping systems shall be so designed as to prevent the accumulation of cargo or water in the pipelines under all normal conditions.

6) Arrangements shall be provided to enable the inert gas main to be connected to an external supply of inert gas. The arrangements shall consist of a 250 mm nominal pipe size bolted flange, isolated from the inert gas main by a valve and located forward of the non-return valve. The design of the flange should conform to the appropriate class in the standards adopted for the design of other external connections in the ship's cargo piping system.

7) If a connection is fitted between the inert gas main and the cargo piping system, arrangements shall be made to ensure an effective isolation having regard to the large pressure difference which may exist between the systems. This shall consist of two shutoff valves with an arrangement to vent the space between the valves in a safe manner or an arrangement consisting of a spool-piece with associated blanks.

8) The valve separating the inert gas main from the cargo main and which is on the cargo main side shall be a non-return valve with a positive means of closure (see Fig 2).

9) Inert gas piping systems shall not pass through accommodation, service and control station spaces.

Figure 2 : Effective isolation between cargo and inert gas piping

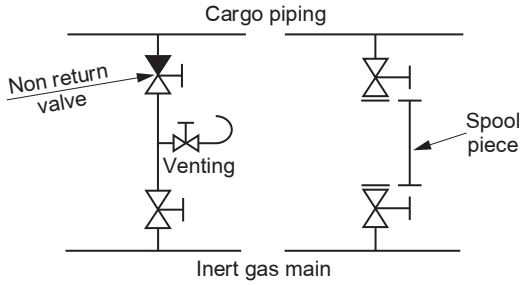

4.3.4 Indicators and alarms

a) The operation status of the inert gas system shall be indicated in a control panel.

b) Instrumentation shall be fitted for continuously indicating and permanently recording, when inert gas is being supplied:

1) the pressure of the inert gas mains forward of the non-return devices; and

2) the oxygen content of the inert gas.

c) The indicating and recording devices shall be placed in the cargo control room where provided. But where no cargo control room is provided, they shall be placed in a position easily accessible to the officer in charge of cargo operations.

d) In addition, meters shall be fitted:

1) in the central control station, and navigating bridge if any, to indicate at all times the pressure referred to in item b) 1); and

2) in the machinery control room or in the machinery space to indicate the oxygen content referred to in item b) 2).

e) Audible and visual alarms

1) Audible and visual alarms shall be provided, based on the system designed, to indicate:

- oxygen content in excess of 5% by volume (see also item e) 2));
- failure of the power supply to the indicating devices as referred to in item b);
- gas pressure less than 100 mm water gauge (see also item e) 2));
- high-gas pressure; and
- failure of the power supply to the automatic control system (see also item e) 2)).

2) The alarms required in item e) 1) for:

- oxygen content
- gas pressure less than 100 mm water gauge, and
- failure of the power supply to the automatic control system,

shall be fitted in the machinery space and cargo control room, where provided, but in each case in such a position that they are immediately received by responsible members of the crew.

3) An audible alarm system independent of that required in item e) 1) for gas pressure less than 100 mm water gauge, or automatic shutdown of cargo pumps shall be provided to operate on predetermined limits of low pressure in the inert gas main being reached.

4) Two oxygen sensors shall be positioned at appropriate locations in the space or spaces containing the inert gas system. If the oxygen level falls below 19%, these sensors shall trigger alarms, which shall be both visible and audible inside and outside the space or spaces and shall be placed in such a position that they are immediately received by responsible members of the crew.

4.3.5 Instruction manuals

Detailed instruction manuals shall be provided on board, covering the operations, safety and maintenance requirements and occupational health hazards relevant to the inert gas system and its application to the cargo tank system.

Note 1: Refer to the Revised Guidelines for inert gas systems (MSC/Circ.353), as amended by MSC/Circ.387.

The manuals shall include guidance on procedures to be followed in the event of a fault or failure of the inert gas system.

4.4 Requirements for flue gas and inert gas generator systems

4.4.1 Application

In addition to the provisions in [4.3], for inert gas systems using flue gas or inert gas generators, the provisions of this sub-article shall apply.

4.4.2 System requirements

a) Inert gas generators

1) Two fuel oil pumps shall be fitted to the inert gas generator. Suitable fuel in sufficient quantity shall be provided for the inert gas generators.

2) The inert gas generators shall be located outside the cargo tank area. Spaces containing inert gas generators shall have no direct access to accommodation service or control station spaces, but may be located in machinery spaces. If they are not located in machinery spaces, such a compartment shall be separated by a gastight steel bulkhead and/or deck from accommodation, service and control station spaces. Adequate positive-pressure-type mechanical ventilation shall be provided for such a compartment.

b) Gas regulating valves

1) A gas regulating valve shall be fitted in the inert gas main. This valve shall be automatically controlled to close, as required in [4.3.2], item b). It shall also be capable of automatically regulating the flow of inert gas to the cargo tanks unless means are provided to automatically control the inert gas flow rate.

2) The gas regulating valve shall be located at the forward bulkhead of the forward most gas-safe space through which the inert gas main passes.

c) Cooling and scrubbing arrangement

1) Means shall be fitted which will effectively cool the volume of gas specified in [4.3.1], item b) and remove solids and sulphur combustion products. The cooling water arrangements shall be such that an adequate supply of water will always be available without interfering with any essential services on the ship. Provision shall also be made for an alternative supply of cooling water.

2) Filters or equivalent devices shall be fitted to minimize the amount of water carried over to the inert gas blowers.

d) Blowers

1) At least two inert gas blowers shall be fitted and be capable of delivering to the cargo tanks at least the volume of gas required by [4.3.1], item b). For systems fitted with inert gas generators the Society may permit only one blower if that system is capable of delivering the total volume of gas required by [4.3.1], item b) to the cargo tanks, provided that sufficient spares for the blower and its prime mover are carried on board to enable any failure of the blower and its prime mover to be rectified by the ship's crew.

2) Where inert gas generators are served by positive displacement blowers, a pressure relief device shall be provided to prevent excess pressure being developed on the discharge side of the blower.

3) When two blowers are provided, the total required capacity of the inert gas system shall be divided evenly between the two and in no case is one blower to have a capacity less than 1/3 of the total required.

e) Inert gas isolating valves

For systems using flue gas, flue gas isolating valves shall be fitted in the inert gas mains between the boiler uptakes and the flue gas scrubber. These valves shall be provided with indicators to show whether they are open or shut, and precautions shall be taken to maintain them gastight and keep the seatings clear of soot. Arrangements shall be made to ensure that boiler soot blowers cannot be operated when the corresponding flue gas valve is open.

f) Prevention of flue gas leakage

1) Special consideration shall be given to the design and location of scrubber and blowers with relevant piping and fittings in order to prevent flue gas leakages into enclosed spaces.

2) To permit safe maintenance, an additional water seal or other effective means of preventing flue gas leakage shall be fitted between the flue gas isolating valves and scrubber or incorporated in the gas entry to the scrubber.

4.4.3 Indicators and alarms

a) In addition to the requirements in [4.3.4], item b), means shall be provided for continuously indicating the temperature of the inert gas at the discharge side of the system, whenever it is operating.

b) In addition to the requirements in [4.3.4], item e), audible and visual alarms shall be provided to indicate:

- insufficient fuel oil supply to the oil-fired inert gas generator;
- failure of the power supply to the generator;
- low water pressure or low water flow rate to the cooling and scrubbing arrangement;
- high water level in the cooling and scrubbing arrangement;
- high gas temperature;
- failure of the inert gas blowers; and
- low water level in the water seal.

4.5 Requirements for nitrogen generator systems when inert gas is required

4.5.1 The following requirements apply where a nitrogen generator system is fitted on board as required by [4.1.1]. For the purpose, the inert gas is to be produced by separating air into its component gases by passing compressed air through a bundle of hollow fibres, semi-permeable membranes or adsorber materials.

4.5.2 In addition to the provisions in [4.3], for inert gas systems using nitrogen generators, the provisions of the present Article apply.

4.5.3 the nitrogen generator system is to comply with Ch 1, Sec 16, [2.2.2]and Ch 1, Sec 16, [2.1.11].

4.5.4 A nitrogen generator is to consist of a feed air treatment system and any number of membrane or adsorber modules in parallel necessary to meet the requirements of [4.3.1], item b) 4).

4.5.5 The nitrogen generator is to be capable of delivering high purity nitrogen in accordance with, item b) 5). In addition to, item d), the system is to be fitted with automatic means to discharge "off-spec" gas to the atmosphere during start-up and abnormal operation.

4.5.6 The system shall be provided with one or more compressors to generate enough positive pressure to be capable of delivering the total volume of gas required by [4.3.1], item b).

4.5.7 Where two compressors are provided, the total required capacity of the system is preferably to be divided equally between the two compressors, and in no case is one compressor to have a capacity less than 1/3 of the total capacity required.

4.5.8 A feed air treatment system shall be fitted to remove free water, particles and traces of oil from the compressed air.

4.5.9 It is also to preserve the specification temperature.

4.5.10 The oxygen-enriched air from the nitrogen generator and the nitrogen-product enriched gas from the protective devices of the nitrogen receiver are to be discharged to a safe location on the open deck.

Note 1: "safe location" needs to address the two types of discharges separately:

- oxygen-enriched air from the nitrogen generator - safe locations on the open deck are:
  - outside of hazardous area;
  - not within 3m of areas traversed by personnel; and
  - not within 6m of air intakes for machinery (engines and boilers) and all ventilation inlets
- nitrogen-product enriched gas from the protective devices of the nitrogen receiver - safe locations on the open deck are:
  - not within 3m of areas traversed by personnel; and
  - not within 6m of air intakes for machinery (engines and boilers) and all ventilation inlets/outlets.

4.5.11 In order to permit maintenance, means of isolation are to be fitted between the generator and the receiver.

4.5.12 The air compressor and nitrogen generator may be installed in the engine-room or in a separate compartment. A separate compartment and any installed equipment shall be treated as an "Other machinery space" with respect to fire protection. Where a separate compartment is provided for the nitrogen generator, the compartment shall be fitted with an independent mechanical extraction ventilation system providing six air changes per hour. The compartment is to have no direct access to accommodation spaces, service spaces and control stations.

4.5.13 Where a nitrogen receiver or a buffer tank is installed, it may be installed in a dedicated compartment, in a separate compartment containing the air compressor and the generator, in the engine room, or in the cargo area. Where the nitrogen receiver or a buffer tank is installed in an enclosed space, the access shall be arranged only from the open deck and the access door shall open outwards. Adequate, independent mechanical ventilation, of the extraction type, shall be provided for such a compartment.

4.5.14 Indicators and alarms

a) In addition to the requirements in [4.3.4], item b), instrumentation is to be provided for continuously indicating the temperature and pressure of air at the suction side of the nitrogen generator.

b) In addition to the requirements in [4.3.4], item e), audible and visual alarms shall be provided to include:
   - failure of the electric heater, if fitted;
   - low feed-air pressure or flow from the compressor;
   - high-air temperature; and
   - high condensate level at automatic drain of water separator.

4.6 Requirements for nitrogen generator / inert gas system when fitted but not required

4.6.1 Nitrogen/inert gas systems fitted on units for which an inert gas system is not required are to comply with the following requirements.

4.6.2 Requirements of:

- [4.3.2], item b)
- [4.3.2], item d)
- [4.3.4], item b)
- [4.3.4], item c)
- [4.3.4], item e) 1) regarding oxygen content and power supply to the indicating devices
- [4.3.4], item e) 4)
- [4.5.6], [4.5.8], [4.5.12], [4.5.13] and
- [4.5.14]

apply to the systems.

5 Hydrocarbon blanket gas system

5.1 General

5.1.1 Application

In addition to the inert gas system required in the present Section, an hydrocarbon blanket gas system may be installed. It will help to reduce Volatile Organic Compound (VOC) releases to atmosphere.

If a hydrocarbon blanket gas system is installed, a cargo tank vents recovery system referred to in Ch 1, Sec 16, [3] shall also be fitted.

5.1.2 Principles

The principle of the hydrocarbon blanket gas system is to replace the use of inert gas with pure hydrocarbon (HC) blanket gas in the cargo tanks and to recover the off gas.

Gas from the process will be used as blanket gas during cargo tank offloading. During loading the gas emitted from the cargo tanks will be recovered and recycled in the process plant.

5.1.3 General prescriptions

a) The inert gas system required by the provision of [4.1.1] will remain as a backup system in case the hydrocarbon blanket gas sources are not available (e.g. production stopped), or if there is a need to gas free cargo tanks for purposes such as maintenance.

b) When using inert gas as blanket gas, the blanket gas recovery system is to be shutdown to prevent inert gas entering the re-compression train.

c) The hydrocarbon blanket gas system is to be designed, constructed and tested to the satisfaction of the Society.

d) Throughout the present [5], the term “cargo tanks” includes also slop tanks.

e) Detailed instruction manuals are to be provided on board, covering the operations (including first time start up, change-over from inert to hydrocarbon blanket gas and gas freeing), safety and maintenance requirements.

f) Piping, fittings and mechanical parts of this hydrocarbon blanket gas system are to comply with [3.3.1] and are to be designed for the hydrocarbon blanket gas maximum possible supply temperature and pressure.

g) Equipment must be suitable for the hazardous area where they are located.

h) This hydrocarbon blanket gas system is to remain within the cargo area.

i) The limit of the scope of Classification (without **PROC** notation) is generally:
   - upstream at the gas regulating valve referred to in [5.6.1]
   - downstream as defined in Ch 1, Sec 16, [3.2.1].

j) Depending on the findings of the HAZOP studies, the Society may raise additional requirements.

5.1.4 Documents to be submitted

The following documents are to be submitted for review:

- process and instrumentation diagrams of the hydrocarbon blanket gas system and of its connection to the cargo tanks system, to the inert gas system, to the venting systems and to the cargo tank vents recovery system referred to in Ch 1, Sec 16, [3]
- cause and effect diagram for the system
- settings of the pressure/vacuum protection devices
- HAZID and HAZOP studies of the system
- explosion hazard study which investigates hydrocarbon leaks from tank hatches or hydrocarbon blanket gas pipes.

5.2 Materials

5.2.1 Coating of the cargo tanks shall be suitable for the hydrocarbon blanket gas composition.

5.3 Piping system

5.3.1 Piping systems are to be so designed as to prevent the accumulation of hydrocarbon blanket gas in the pipelines under all normal conditions.

5.3.2 Arrangements are to be made to limit the carriage of water present in hydrocarbon blanket gas in the cargo tanks.

5.3.3 Arrangements are to be made to ensure an effective isolation of the cargo tanks and the hydrocarbon blanket gas supply source. This may consist in a fast closing shut-down valve.

5.4 Capacity of the system

5.4.1 The hydrocarbon blanket gas supply capacity shall be at least 125% of maximum offloading rate at cargo tank conditions.

5.5 Venting arrangement and pressure/ vacuum protection

5.5.1 As a general rule, the venting and pressure/vacuum protection systems are to be so designed that the minimum and maximum pressures exerted on any cargo tank considering the process systems will not exceed the test pressures of any cargo tank.

5.5.2 As a general rule, the arrangement of the venting and pressure/vacuum protection systems shall ensure that no flammable mixtures will be present in the cargo tanks.

5.5.3 Relief capacity of the venting arrangements required in Ch 1, Sec 16, [2.2] shall be designed considering the possible maximum hydrocarbon blanket gas supply if one tank is loaded with all gas connections isolated.

5.5.4 The vacuum protection system is to be designed considering a flow rate equal to the maximum offloading rate from the cargo tanks.

5.5.5 Settings of the pressure/vacuum protection system shall take into account the hydrocarbon blanket gas supply and recovery and shall remain within the range defined in Ch 1, Sec 16, [2.1.7].

5.5.6 Cargo vents, if discharged to the atmosphere, shall be led to well-ventilated safe areas.

5.6 Instrumentation

5.6.1 A gas regulating valve is to be fitted in the hydrocarbon blanket gas supply line upstream the shutdown valve mentioned in [5.3.3].

5.6.2 In addition to instrumentation devices and alarms required in Ch 1, Sec 16, [3.8.2] the following are to be provided for continuously recording and indicating:

a) pressure in each individual cargo tank protected by the hydrocarbon blanket gas system
   The pressure loss from the cargo tank to this transmitter is to be as low as possible.

b) temperature of the hydrocarbon blanket supply gas upstream the gas regulating valve mentioned in [5.6.1]

c) oxygen content in each individual cargo tank protected by the hydrocarbon blanket gas system.

Note 1: The oxygen analysis continuously performed on a tank by tank sequential basis is acceptable.

5.6.3 The alarms referred to in [5.6.2] are to be fitted in the machinery space and cargo control room, where provided, but in each case in such a position that they are immediately received by responsible members of the crew.

5.7 Safeguards

5.7.1 In addition to safeguards required in Ch 1, Sec 16, [3.9] the following are to be provided:

a) automatic shutdown of the shutdown valve mentioned in [5.3.3] and of the hydrocarbon blanket gas system is to be arranged on predetermined limits being reached in respect of [5.6.2], item a) (High)

b) automatic shutdown of the cargo offloading or transfer pumps is to be arranged on predetermined limits being reached in respect of [5.6.2], item a) (Low)

c) automatic shutdown of the cargo offloading or transfer pumps is to be arranged in respect of [5.6.2] item c), when the oxygen content exceeds 5% by volume

d) automatic shutdown of the hydrocarbon blanket gas supply is to be arranged in respect of Ch 1, Sec 16, [3.8.2] item e) (failure of the recovery equipment)].

Note 1: These requirements may be adapted based on the findings and conclusions of the HAZOP report.

5.8 Miscellaneous

5.8.1 An adequate automatic gas detection system complying with Pt C, Ch 4, Sec 5, [4] is to be fitted on the main cargo deck.

5.8.2 Any tank that is prepared for maintenance/inspection activities is to be kept isolated from all the other tanks hydrocarbon blanket.

5.8.3 Depending on findings of the HAZOP studies, the Society may raise additional requirements.

6 Cargo and slop tanks fittings

6.1 Application

6.1.1 Requirements of the present [6] are complementary to relevant requirements of Part C, Chapter 1 which remain applicable.

6.2 Protection of cargo and slop tanks against overfilling

6.2.1 General

a) Provisions are to be made to guard against liquid rising in the venting system of cargo or slop tanks to a height which would exceed the design head of the tanks. This is to be accomplished by high level alarms or overflow control systems or other equivalent means, together with gauging devices and cargo tank filling procedures.

b) Sufficient ullage is to be left at the end of tank filling to permit free expansion of liquid during carriage.

c) High level alarms, overflow control systems and other means referred to in a) are to be independent of the gauging systems referred to in [6.3].

6.2.2 High level alarms

a) High level alarms are to be type approved.

b) High level alarms are to give an audible and visual signal at the central control room, where provided.

6.2.3 Other protection systems

a) Where the tank level gauging systems, cargo and ballast pump control systems and valve control systems are centralised in a single location, the provisions of [6.2.1] may be complied with by the fitting of a level gauge for the indication of the end of loading, in addition to that required for each tank under [6.3]. The readings of both gauges for each tank are to be as near as possible to each other and so arranged that any discrepancy between them can be easily detected.

b) Where a tank can be filled only from other tanks, the provisions of [6.2.1] are considered as complied with.

6.3 Cargo and slop tanks level gauging systems

6.3.1 General

a) Each cargo or slop tank is to be fitted with a level gauging system indicating the liquid level along the entire height of the tank. Unless otherwise specified, the gauge may be portable or fixed with local reading.

b) Gauging devices and their remote reading systems are to be type approved.

c) Ullage openings and other gauging devices likely to release cargo vapour to the atmosphere are not to be arranged in enclosed spaces.

6.3.2 Definitions

a) A “restricted gauging device” means a device which penetrates the tank and which, when in use, permits a small quantity of vapour or liquid to be exposed to the atmosphere. When not in use, the device is completely closed. Examples are sounding pipes.

b) A “closed gauging device” means a device which is separated from the tank atmosphere and keeps tank contents from being released. It may:

   1) penetrate the tank, such as float-type systems, electric probe, magnetic probe or protected sight glass

   2) not penetrate the tank, such as ultrasonic or radar devices.

c) An “indirect gauging device” means a device which determines the level of liquid, for instance by means of weighing or pipe flow meter.

6.3.3 Units fitted with an inert gas system

a) In units fitted with an inert gas system, the gauging devices are to be of the closed type.

b) Use of indirect gauging devices will be given special consideration.

6.3.4 Units not fitted with an inert gas system

a) In units not fitted with an inert gas system, the gauging devices are to be of the closed or restricted types. Ullage openings may be used only as a reserve sounding means and are to be fitted with a watertight closing appliance.

b) Where restricted gauging devices are used, provisions are to be made to:

   1) avoid dangerous escape of liquid or vapour under pressure when using the device

   2) relieve the pressure in the tank before the device is operated.

c) Where used, sounding pipes are to be fitted with a self-closing blanking device.

6.4 Heating systems intended for cargo and slop tanks

6.4.1 General

a) Heating systems intended for cargo are to comply with the relevant requirements of Part C, Chapter 1.

b) No part of the heating system is normally to exceed 220°C.

c) Blind flanges or similar devices are to be provided on the heating circuits fitted to tanks carrying cargoes which are not to be heated.

d) Heating systems are to be so designed that the pressure maintained in the heating circuits is higher than that exerted by the cargo oil. This need not be applied to heating circuits which are not in service provided they are drained and blanked-off.

e) Isolating valves are to be provided at the inlet and outlet connections of the tank heating circuits. Arrangements are to be made to allow manual adjustment of the flow.

f) Heating pipes and coils inside tanks are to be built of a material suitable for the heated fluid and of reinforced thickness as per Pt C, Ch 1, Sec 7. They are to have welded connections only.

6.4.2 Steam heating

To reduce the risk of liquid or gaseous cargo returns inside the engine or boiler rooms, steam heating systems of cargo tanks are to satisfy either of the following provisions:

a) they are to be independent of other unit services, except cargo heating or cooling systems, and are not to enter machinery spaces, or

b) they are to be provided with an observation tank on the water return system located within the cargo area. However, this tank may be placed inside the engine room in a well-ventilated position remote from boilers and other sources of ignition. Its air pipe is to be led to the open and fitted with a flame arrester.

6.4.3 Hot water heating

Hot water systems serving cargo tanks are to be independent of other systems. They are not to enter machinery spaces unless the expansion tank is fitted with:

a) means for detection of flammable vapours

b) a vent pipe led to the open and provided with a flame arrester.

6.4.4 Thermal oil heating

Thermal oil heating systems serving cargo tanks are to be arranged by means of a separate secondary system, located completely within the cargo area. However, a single circuit system may be accepted, provided that:

a) the system is so arranged as to ensure a positive pressure in the coil of at least 3 meter water column above the static head of the cargo when the circulating pump is not in operation

b) means are provided in the expansion tank for detection of flammable cargo vapours. Portable equipment may be accepted

c) valves for the individual heating coils are provided with a locking arrangement to ensure that the coils are under static pressure at all times.

6.5 Cleaning of cargo and slop tanks

6.5.1 Adequate means are to be provided for cleaning the cargo tanks.

6.5.2 Units having a storage capacity of 20 000 tons of crude oil and above is to be fitted with a cargo tanks cleaning system using crude oil washing complying with the following requirements. Unless the cargo stored in such unit is not suitable for crude oil washing, the unit is to operate the system with the following requirements.

Note 1: The crude oil washing installation and associated equipment and arrangements are to comply with the requirements of MARPOL 73/78 Annex I convention and IMO Resolution A.446(XI) as amended by Resolutions A.497(XII) and A.897(21). The sentence of resolution A. 446(XI) paragraph 4.4.4 "... Suitable arrangements for hand dipping are to be provided at the aftermost portion of a cargo tank..." is to be read "...Suitable arrangements for hand dipping are to be provided at the lowest portion of a tank at the operating trim..."

6.5.3 Every offshore unit operating with crude oil washing system is to be provided with an Operations and Equipment Manual detailing the system and equipment and specifying operational procedures such a manual is to be to the satisfaction of the Society and is to contain all the information set out in Note 1 of [6.5.2]. If an alteration affecting the crude oil washing system is made, the Operating and Equipment Manual is to be revised accordingly.

Note 1: For the Standard format of the Crude Oil Washing Operation and Equipment Manual reference is made to the IMO Resolution MEPC.3(XII) as amended by IMO Resolution MEPC.81(43).

6.5.4 Fixed or portable tank washing machines are to be of a type approved by the Society.

Note 1: Washing machines are to be made of steel or other electricity conducting materials with a limited propensity to produce sparks on contact.

6.5.5 Fixed washing machines are to be installed and secured to the satisfaction of the Society. They are to be isolated by a valve or equivalent device.

6.5.6 Washing pipes are to be built, fitted, inspected and tested in accordance with the requirements of Part C, Chapter 1 and of other documents referred to in this Chapter applicable to pressure piping, depending of the kind of washing fluid, water or crude oil.

6.5.7 Washing machines of floating storage units using a crude oil washing system are to be fixed.

6.5.8 Crude oil washing pipes are to satisfy the requirements of [3] applicable to cargo pipes. However, crude oil washing machines may be connected to water washing pipes, provided that isolating arrangements, such as a valve and a detachable pipe section, are fitted to isolate water pipes.

6.5.9 Crude oil washing pipes, if used for water washing operations, are to be fitted with efficient drainage means.

6.5.10 If crude oil and water washing pipes are not separated, the washing water heater is to be placed outside the engine room and is to be isolated by valves or other equivalent clearly marked arrangements.

6.5.11 The installation of the washing systems is to comply with the following provisions:

a) tank cleaning openings are not to be arranged in enclosed spaces

b) the complete installation is permanently earthed to the hull.

6.6 Cathodic protection

6.6.1 Unless specially authorised by the Society, impressed current cathodic protection systems are not to be used in cargo oil or slop tanks.

6.6.2 Aluminium or magnesium alloy anodes are not to be used in cargo and slop tanks.

6.6.3 Aluminium anodes are permitted in cargo and slop tanks only if their potential energy does not exceed 0,275 kJ, the height of the anode being measured from the tank bottom to the centre of the anode and its weight being the total weight, including the securing devices.

Where an aluminium anode is fitted above an horizontal surface such as a bulkhead stiffener, and provided that the stiffener measures at least 1 m in width and comprises a flange extending at least 75 mm above its horizontal surface, the anode height may be measured to the horizontal surface of the stiffener.

Aluminium anodes are not to be located under access hatches or washing holes unless they are protected by the adjacent structure.

6.6.4 In all cases, the anodes are to be properly secured to the structure.

6.6.5 As a general rule, the requirements of the present [6.6] are applicable also to compartments adjacent to cargo or slop tanks.

6.7 Aluminium paints

6.7.1 Aluminium paints are not to be used in cargo and slop tanks, pump rooms, cofferdams, or wherever dangerous vapours may gather unless it is justified by tests that the paints utilised do not increase the risk of spark production.

7 Bow or stern cargo oil transfer

7.1 General

7.1.1 Bow or stern cargo transfer installations are to comply with the applicable requirements of [3] and [7.2]. Portable arrangements are not permitted.

7.2 Piping requirements

7.2.1 Cargo piping outside the storage area is to be clearly identified and fitted with shut-off valves at connections to the cargo piping system within the storage area and, where applicable, at junctions with flexible hose(s) or articulated piping used for connection with single point mooring or riser.

Note 1: The piping outside the cargo area is to be fitted with a shut-off valve at its connection with the piping system within the cargo area and separating means such as blank flanges or removable spool pieces are to be provided when the piping is not in use, irrespective of the number and type of valves in the line.

7.2.2 Article [3] is applicable. Moreover, pipe connections outside the storage area are to be of welded type only.

7.2.3 Arrangements are to be made to allow piping to be efficiently drained and purged.

7.3 Openings

7.3.1 Openings are to comply with Ch 1, Sec 17, [7.2.5].

7.4 Coamings

7.4.1 Continuous coamings of suitable height are to be fitted to keep spills on deck and away from the accommodation and service areas.

Escape routes are not to terminate within the limits of these coamings or within a distance of 3 m from them.

The zones within the limits and a distance of 3 m beyond these coamings are considered as hazardous zones 1 or 2, according to Ch 1, Sec 17, [2.2].

7.5 Fire fighting

7.5.1 Where the loading and offloading areas of the unit are not protected by the fixed deck foam system required in Ch 1, Sec 17, [7.5], 2 additional foam monitors or applicators are to be provided to protect these areas.

7.6 Fire-fighting system

7.6.1 The fixed foam fire-fighting system provided for the application of Ch 1, Sec 17, [7.5] is to permit the protection of the transfer zone by at least two foam applicators.

7.7 Remote shut-down

7.7.1 Provision is to be made for the remote shut-down of cargo pumps from the cargo transfer location.

Means of communication between the loading control station and the cargo transfer location are to be provided and certified safe, if necessary.

Section 19 Use of Process Gas and Crude Oil as Fuel

1 General

1.1 Application

1.1.1 This Section addresses the design of machinery fuelled with process gas or crude oil, as well as the arrangement of the spaces where such machinery is located.

1.2 Additional requirements

1.2.1 Additional requirements for machinery are given in Pt C, Ch 1, App 4 and NR467 Pt C, Ch 1, App 2, which address the design of dual fuel engines supplied by low pressure gas and dual fuel gas turbines.

1.3 Documents to be submitted

1.3.1 The drawings and documents to be submitted for gas fuelled installations are listed in NR481, Design and Installation of Dual Fuel Engines Using Low Pressure Gas.

1.3.2 The drawings and documents to be submitted for crude oil fuelled installations are to include at least:

- general arrangement of the engine or boiler compartment
- general arrangement of the auxiliary compartment
- diagram and PID for crude oil and fuel oil (HFO/MDO) systems inside auxiliary compartment and engine or boiler compartment
- ventilation diagram and location of the crude oil vapour detectors
- details of the pipe ducting system (on the engine or boiler and external) and hoods, where provided
- details of the leakage detection system
- specification of the engines or boilers, auxiliary systems, electrical equipment, etc.
- risk analysis covering the operation of the engines on crude oil as well as the possible presence of crude oil vapours in the machinery spaces.

1.4 Definitions

1.4.1 Low pressure / high pressure gas

Low pressure gas means gas with a maximum service pressure less than or equal to 50 bar gauge.

1.4.2 Engine

"Engine" means either a diesel engine or a gas turbine.

1.4.3 Dual fuel engine (or boiler)

A dual fuel engine (or boiler) is an engine (or boiler) which can be operated with liquid fuel (MDO or HFO) and gaseous fuel.

1.4.4 Crude oil engine (or boiler)

A crude oil engine (or boiler) is an engine (or boiler) which can be operated either with liquid fuel (MDO or HFO) or with crude oil, successively.

2 Requirements applicable to process gas and to crude oil

2.1 Principle

2.1.1 Engines (or boilers) intended to burn process gas or crude oil are also to be capable of burning bunker fuel oils (MDO or HFO) in case of failure of the process gas or crude oil supply.

2.1.2 The arrangement of the machinery spaces containing dual fuel or crude oil engines or boilers, the distribution of the engines or boilers and the design of the safety systems are to be such that, in case of any gas or crude oil vapours leakage, the automatic safety actions will not result in all engines or boilers being disabled. Provisions are to be made to maintain the essential services of the unit in such case.

2.1.3 The use of gases heavier than air is not permitted in machinery spaces, except if it is demonstrated that the geometry of the space bottom and the arrangement of the ventilation system preclude any risk of gas accumulation.

2.2 Ventilation

2.2.1 Spaces in which gas fuel or crude oil is utilized are to be fitted with a mechanical ventilation system and are to be arranged in such a way as to prevent the formation of dead spaces. Such ventilation is to be particularly effective in the vicinity of electrical equipment and machinery or of other equipment or machinery which may generate sparks. Such a ventilation system is to be separated from those intended for other spaces.

2.3 Gas detection

2.3.1 Combustible gas detectors are to be fitted in all machinery spaces where gas or crude oil is utilized, particularly in the zones where air circulation is reduced. Hydrogen sulphide detectors are also to be fitted unless means for sulphur removal are provided. The gas detection systems is to comply with the requirement of Pt C, Ch 4, Sec 5, [4].

2.3.2 Gas detectors are also to be provided where required in Articles [3] and [4], i.e. in ducts containing gas or crude oil pipes, hoods, etc.

2.4 Electrical equipment

2.4.1 Electrical equipment installed in gas dangerous areas or in areas which may become dangerous (such as hoods, ducts or covers in which gas or crude-oil piping is placed) is to be of certified safe type as required by Pt C, Ch 2, Sec 15.

3 Use of process gas

3.1 Gas conditioning and storage conditions

3.1.1 General

The installations required for conditioning the gas for use in boilers or engines (heating, compression, etc.) and possible storage are to be situated on the weather deck in the storage area, due precautions being taken for the protection of these installations against the sea and for their free access under normal circumstances. If those installations are situated in closed rooms on the weather deck, such rooms are to be efficiently exhaust ventilated by means of a mechanical ventilating system completely independent from the other ventilation systems of the unit and fitted with gas detectors. These rooms are to communicate with the outside only.

The scantlings and construction of the various pressure parts of the installation are to comply with the applicable requirements of the present chapter and of Pt C, Ch 1, Sec 3 (pressure equipment) and Pt C, Ch 1, Sec 7 (piping systems).

3.1.2 Heaters - Coolers

Operation of the heaters/coolers is to be automatically regulated according to the temperature of the gas at the outlets.

Before their possible return to the machinery compartments, the heating/cooling fluids are, normally, to pass through a gas freeing tank fitted with a pipe provided with a gas detector and exhausting to the open air.

3.1.3 Compressors

Discharge of the compressors is to be automatically stopped:

- when the suction pressure falls below the atmospheric pressure or a pressure determined as a function of the setting of the crude oil tank vacuum safety valves
- when the discharge pressure or the pressure in the crude oil tanks reaches a value determined as a function of the setting of the safety valves fitted on the high pressure side of the compressors or on the crude oil storage tanks
- in case of lowering of the temperature of the gas at the heater outlets.

The compressors are to be capable of being remotely stopped from a place easily accessible at all times as well as from the machinery compartment.

3.1.4 Reducing valves

The reducing valves provided on the gas system are to be installed as specified in [3.1.1].

The reducing valves are to be fitted on the low pressure side.

3.1.5 Protection against overpressure

The usual overpressure safety devices are to be fitted. This is applicable, in particular, to safety valves on the compressors, crude oil storage tanks and, possibly, heaters, all such safety valves discharging in the open air.

3.2 Gas fuel supply to engines and boilers

3.2.1 General

Gas fuel piping for engine and boiler supply is not to pass through accommodation spaces, services spaces, or control stations. Gas fuel piping may pass through or extend into other spaces provided its design fulfils the provisions of Tab 1.

If a gas leak occurs, the gas fuel supply should not be restored until the leak has been found and repaired. Instructions to this effect should be placed in a prominent position in the machinery spaces.

Table 1 : Design principle of the gas fuel piping

Working pressure (bar)	Nature of the gas	
	Lighter than air	Heavier than air
≤10	• double-walled piping according to [3.2.2], or • safeguarded machinery spaces according to [3.2.3]**(1)**	double-walled piping according to [3.2.2]
>10	double-walled piping according to [3.2.2]	
(1) "Safeguarded machinery spaces" arrangement is subject to the agreement of the Flag Administration.		

3.2.2 Double-walled piping arrangement

a) *Double-walled piping systems are to fulfil one of the following:*

1) *the gas fuel piping should be of a double-wall piping system with the gas fuel contained in the inner pipe. The space between the concentric pipes should be pressurized with inert gas at a pressure greater than the gas fuel pressure. Suitable alarms should be provided to indicate the loss of inert gas pressure between the pipes.* The pressure in the space between the concentric pipes is to be continuously monitored. An alarm is to be issued and the two automatic valves on the gas fuel line and the master gas valve referred to in [3.2.7] are to be closed before the pressure drops to below the inner pipe pressure. At the same time, the interlocked venting valve is to be opened. The inside of the gas fuel supply piping system between the master gas valve and the engine is to be automatically purged with inert gas when the master gas valve is closed*; or*

2) *the gas fuel piping should be installed within a ventilated pipe or duct. The air space between the gas fuel piping and inner wall of this pipe or duct should be equipped with mechanical exhaust ventilation having a capacity of at least 30 air changes par hour. The ventilation system should be arranged to maintain a pressure less than the atmospheric pressure. The fan motors should be placed outside the ventilated pipe or duct. The ventilation outlet should be placed in a position where no flammable gas-air mixture may be ignited. The ventilation should always be in operation when there is gas fuel in the piping. Continuous gas detection should be provided to indicate leaks. It should activate the alarm at 30% of the lower flammable limit and shut down the gas the master gas fuel valve referred to in [3.2.7] before the gas concentration reaches 60% of the lower flammable limit. The master gas fuel valve should close automatically if the required air flow is not established and maintained by the exhaust ventilation system.*

   The air intakes of the mechanical ventilation system are to be provided with non-return devices effective for gas fuel leaks. However, if a gas detector is fitted at the air intake, this requirement may be dispensed with.

   The materials, construction and strength of protection pipes or ducts and mechanical ventilation systems are to be sufficiently durable against bursting and rapid expansion of high pressure gas in the event of gas pipe burst.

b) *The double-wall piping system of the ventilated pipe or duct provided for the gas fuel piping should terminate at the ventilation hood or casing required by [3.2.9].*

3.2.3 Arrangement of the "safeguarded machinery spaces"

Where permitted, safeguarded machinery spaces arranged in accordance with the following provisions may be accepted as an alternative to [3.2.2]:

a) Volume of the machinery spaces

   The volume of the machinery spaces is to be kept as low as practicable, to facilitate the ventilation and gas detection.

b) Piping arrangement

   Pipes are to be installed as far as practicable from hot surfaces and electrical equipment.

c) Ventilation

   The machinery spaces are to be fitted with a ventilation system of the extraction type complying with the following provisions:

   - the ventilation system is to maintain a pressure less than that of the adjacent spaces, this pressure being permanently monitored
   - the capacity of the ventilation system is to be at least 30 changes per hour
   - the ventilation system is to be so arranged as to ensure an immediate and effective evacuation of the leaked gas, whatever the location and the extent of the piping damage. In particular, the possibility of gas accumulation in dead spaces is to be precluded

- the exhaust fans are to be of a non-sparking type
- the prime movers of the exhaust fans are to be located outside the concerned space and outside the exhaust ducts serving the compartment. Alternatively, intrinsically safe motors may be used
- the exhaust duct is to be led to a location where there is no risk of ignition.

d) Electrical equipment

The electrical equipment not pertaining to the engine and which is required for the safety of the compartment (such as lighting or ventilation) is to be of a safe type.

In case of gas detection with a concentration reaching 60 percent of the LFL, the other electrical equipment situated in the compartment is to be de-energized by switching off their electrical supply.

e) Gas monitoring systems

At least one gas monitoring system is to be provided in way of each engine, and one in the compartment at the exhaust air outlet.

Gas monitoring systems are to of the continuous type. They are to be so designed as to avoid any false detection. Voting systems or equivalent arrangement are to be considered for this purpose.

f) Validation tests

The efficiency of the ventilation system and gas monitoring installation is to be demonstrated by means of appropriate analysis or tests for all operating cases (number of engines in operation, power developed by the engines, ventilation rate). In particular, the following parameters are to be validated:

- position of the ventilation inlets and outlets
- distribution of the ventilation flows
- number and distribution of the gas detectors.

3.2.4 Class of the gas piping

Class of the gas piping is to comply with the provisions of Tab 2.

Table 2 : Class of gas piping

Gas piping type	Class I	Class II	Class III
Double wall type with pressurized and inerted external pipe (see [3.2.2], item a)1))			
• internal pipe		X	
• external pipe		X	
Double wall type with inerted external pipe or duct (see [3.2.2], item a)2))			
• internal pipe		X	
• external pipe or duct			X
Gas pipe arranged according to the “safeguarded machinery space” (see [3.2.3])	X		
Open-ended gas vent lines			X

3.2.5 Materials

Materials used in gas supply lines are to comply with the relevant provisions of IGC Code, Chapters 5 and 6.

3.2.6 Pipe connections

a) Class I pipes

Class I pipes are to be connected by means of full penetration butt-welded joints. However, welded neck flanges (type A1 according to Pt C, Ch 1, Sec 7, Fig 1) restricted to the minimum necessary for mounting and dismantling purposes may be accepted. All welded joints are to be fully radiographied.

b) Class II pipes

Class II pipes may be connected as required in item a) or by means of slip-on or socked welded flanges. Other piping connections may be accepted by the Society on a case by case basis.

Note 1: Screwed couplings of a type approved by the Society may be used only for accessory lines and instrumentation lines with external diameters of 25 mm or less.

3.2.7 Automatic shut-off valves

a) Block-and-bleed valves

Each gas utilization unit should be provided with a set of three automatic valves. Two of these valves should be in series in the gas fuel pipe to the consuming equipment. The third valve should be in a pipe that vents, to a safe location in the open air, that portion of the gas fuel piping that is between the two valves in series. These valves should be arranged so that abnormal pressure in the gas fuel supply line, or failure of the valve control actuating medium will cause the two gas fuel

valves which are in series to close automatically and the vent valve to open automatically. Alternatively, the function of one of the valves in series and the vent valve can be incorporated into one valve body so arranged that, when one of the above conditions occurs, flow to the gas utilization unit will be blocked and the vent opened. The three shutoff valves should be arranged for manual reset.

Note 1: Block-and-bleed valves are also to be fitted on the pilot burners supply lines.

b) Master gas valves

A master gas fuel valve that can be closed from within the machinery space should be provided within the cargo area. The valve should be arranged so as to close automatically if leakage of gas is detected, or loss of ventilation for the duct or casing or loss of pressurization of the double-wall gas fuel piping occurs.

3.2.8 Gas pressure regulation

When supplying engines, the gas fuel system is to be provided with a pressure regulation system allowing a gas supply to the engines at the required pressure without significant fluctuations, irrespective of the number of engines in operation and of the developed power. Where necessary a buffer tank is to be fitted.

3.2.9 Ventilation hoods and casings

A ventilation hood or casing should be provided for the areas occupied by flanges, valves, etc., and for the gas fuel piping, at the gas fuel utilization units, such as boilers, diesel engines or gas turbines. If this ventilation hood or casing is not served by the exhaust ventilation fan serving the ventilated pipe or duct as specified in [3.2.2] a)2), then it should be equipped with an exhaust ventilation system and continuous gas detection should be provided to indicate leaks and to shut down the gas fuel supply to the machinery space in accordance with [3.2.2] a)2). The master gas fuel valve required by [3.2.7] b) should close automatically if the required air flow is not established and maintained by the exhaust ventilation system.

Note 1: When the machinery space is arranged according to the "safeguarded machinery spaces" principle (see [3.2.3]), the ventilation hood or casing is not required.

In the case of gas fuel lighter than air, *the ventilated hood or casing is to be installed or mounted to permit the ventilating air to sweep across the gas utilization unit and be exhausted at the top of the ventilation hood or casing.*

In the case of gas fuel heavier than air, the ventilated hood or casing is to be so arranged as to permit the ventilating air to sweep across the engine or turbine and be exhausted at the bottom of the ventilation hood or casing.

3.3 Dual fuel engines

3.3.1 Dual fuel engines are to be type-approved by the Society.

3.3.2 Dual fuel engines are to be designed so as to operate safely with any gas composition within the unit specification range, taking into account the possible variations of the gas composition during the process operations. Tests are to be conducted to demonstrate their ability in this respect.

3.3.3 The fuel supply is to be capable of being switched over from gas fuel to oil fuel while the engine is running at any load, without significant fluctuation of the engine output nor of the rotational speed.

3.3.4 Prior to a normal stop, the engine is to be switched over from gas fuel to oil fuel.

3.3.5 After each gas operation of the engine not followed by a oil fuel operation, the engine including the exhaust system is to be purged during a sufficient time in order to discharge the gas which may be present.

3.3.6 Engines are to be fitted with a control system allowing a steady running with stable combustion, with any gas composition within the unit specification range, throughout the operating speed range of the engine, in particular at low loads.

3.3.7 Engines are to be so designed and controlled as to avoid any excessive gas delivery to the engine, which may result in the engine overspeed, in particular while the engine is running with gas fuel and oil fuel at the same time.

3.3.8 Gas piping located on the engine is to comply with the provisions of [3.2].

3.4 Dual fuel boilers

3.4.1 Liquid fuel pilot burner

For dual-fuel boilers, a liquid fuel pilot burner is normally to be permanently in service on the boiler when the boiler is working and a safety device is to be fitted to prevent gas supply when this burner is not in service.

However, the gas supply to the boiler without the pilot burner in service may be admitted, subject to the following arrangements:

- the gas burners are to be ignited by the liquid fuel burners
- the eventual switching to the liquid fuel is to be automatic and as fast as possible in order to shorten the duration of the power loss, taking into account the possible durations for scavenging and pressure recovery

- for this purpose, the liquid fuel burners and their supply piping are always to be kept available during stand-by while gas firing
- the flame detection is to be efficient for all firing conditions
- in the event of a complete loss of flame in the furnace, the ignition procedure of the liquid fuel burners must include an efficient scavenging of the furnace.

3.4.2 Safety devices

Safety devices are to be provided for the automatic stopping of the gas supply to the boiler in the following cases:

- abnormal variation in the pressure of the gas
- abnormal variation in the pressure of the air
- stopping of the forced draught fans
- extinction of the gas burners.

Each burner is to be fitted with a quick closing cock or valve, so designed that the burner cannot possibly be withdrawn without the gas supply being automatically cut off.

Precautions are to be taken to ensure the stability of the flame of the gas burners, specially at low load. A device is to be provided to maintain the ratio air-gas at a suitable value.

Safety devices are to be provided to prevent each boiler from being fired before the combustion chamber is suitably air scavenged.

3.4.3 Automatic burning installations

Automatic burning installations will be subject to special examination by the Society.

3.4.4 Design of combustion chambers

Combustion chambers are to be so designed as to avoid dead zones where gas might accumulate. The Society reserves the right to require gas detectors in such zones, if these cannot be avoided, and additional air inlets to scavenge these zones if necessary.

4 Use of crude oil

4.1 General

4.1.1 Crude oil may be used as fuel for main or auxiliary boilers and for engines according to the following requirements. For this purpose all arrangement drawings of a crude oil installation with pipeline layout and safety equipment are to be submitted for approval in each case.

4.1.2 Crude oil or slops may be taken directly from cargo tanks or from other suitable tanks. These tanks are to be fitted in the cargo tank area and are to be separated from non-gas dangerous areas by means of cofferdams with gas-tight bulkheads.

4.1.3 The construction and workmanship of the engines and boilers, including their burners, are to be proved to be satisfactory operation with crude oil.

4.1.4 Arrangement are to be made to prevent crude oil effluents or vapours from reaching any gas safe compartment or contaminating non-hazardous fluid systems.

4.2 Arrangement of machinery spaces

4.2.1 Boilers and engines supplied with crude oil are to be located in a dedicated space, referred to as “crude oil machinery space”, separated from other machinery spaces by gas-tight bulkheads. This space is not to contain electric and steam prime movers of pumps, of separators, etc., except when steam temperature is less than 220°C.

4.2.2 The whole system of pumps, strainers, separators and heaters, if any, are to be fitted in the cargo pump room or in another room, to be considered as dangerous, and separated from other machinery spaces by gas-tight bulkheads.

4.3 Pumps

4.3.1 Pumps are to be fitted with a pressure relief bypass from delivery to suction side and it is to be possible to stop them by a remote control placed in a position near the boiler fronts, engine local control position or machinery control room and from outside the machinery spaces.

4.3.2 Where drive shafts pass through pump room bulkhead or deck plating, type-approved gas-tight glands are to be fitted. The glands are to be efficiently lubricated from outside the pump room.

4.4 Heating arrangements

4.4.1 General

All crude oil and slop heating systems are to be built, fitted and tested in accordance with the provisions of Pt C, Ch 1, Sec 7. Refer also to Ch 1, Sec 18, [6.4].

The heating medium temperature is not to exceed 220°C.

Heating pipes, unless otherwise accepted by the Society, are to be fitted with valves or equivalent arrangements to isolate them from each tank and manually adjust the flow.

Means are to be provided to prevent the heating medium supply to the tank heating coils when the product which is not to be heated.

Tank heating system is to be so designed that, when in service, the pressure maintained in the system is higher than that exerted by crude oil.

The heating piping system is to be so arranged as to be easily drained in case of contamination by crude oil.

4.4.2 Observation tank

When crude oil is heated by steam or hot water, the outlet of the heating coils is to be led to a separate observation tank installed together with the components mentioned in [4.2.1].

This tank is to be closed and located in a well ventilated position. It is to be fitted with:

- adequate lighting
- a venting pipe led to the atmosphere in a safe position according to Ch 1, Sec 16 and with the outlet fitted with a suitable flame proof wire gauze of corrosion resistant material which is to be easily removable for cleaning
- arrangements for sampling.

4.4.3 Tank heating arrangements

Heating system pipes are to penetrate crude oil storage tanks only at the top.

Pipes fitted inside tanks are to be of reinforced thickness and built of material suitable for heated fluids. Pipe connections inside crude oil or slop tanks, unless otherwise authorised by the Society, are to be hard-soldered or welded, depending on the type of material.

4.4.4 Control and monitoring

Each tank equipped with a heating system is to be provided with arrangements which permit the measurement of the liquid temperature. Portable arrangements may be used, unless otherwise specified by the Society. In that case, the tank opening is to be of a restricted type.

When it is necessary to preheat crude oil or slops, their temperature is to be automatically controlled and a high temperature alarm is to be fitted.

4.5 Piping system

4.5.1 Pipe thickness

The piping for crude oil or slops and the draining pipes referred to in [4.5.5], [4.6.3] and [4.7.3] are to have a thickness complying with Tab 3.

4.5.2 Pipe connections

Crude oil pipes connections are to be of the heavy flange type. They are to be kept to the minimum necessary for inspection and maintenance.

Table 3 : Minimum thickness of crude oil pipes

External diameter d_e of pipe, in mm	Minimum thickness t, in mm
$d_e \leq 82,5$	6,3
$88,9 < d_e \leq 108,0$	7,1
$114,3 < d_e \leq 139,7$	8,0
$152,4 < d_e$	8,8

4.5.3 Master valve

A quick closing master valve is to be fitted on the crude oil supply to each boiler or engine manifold.

4.5.4 Crude oil return and overflow pipes

Crude oil return and overflow pipes are not to discharge into fuel oil tanks. When using fuel oil for delivery to and return from boilers, fuel oil burning units are to be fitted in the boiler room.

Fuel oil delivery to, and returns from, boilers and engines are to be effected by means of a mechanical interlocking device so that running on fuel oil automatically excludes running on crude oil or vice versa.

4.5.5 Crude oil draining pipes and drain tanks

Tanks collecting crude oil drains are to be located in the pump room or in another suitable space, to be considered as dangerous. Such tanks are to be fitted with a vent pipe led to the open in a safe position and with the outlet fitted with wire gauze made of material resistant to corrosion and easily dismountable for cleaning.

Draining pipes are to be fitted with arrangements to prevent the return of gas to the machinery spaces.

4.6 Additional requirements for boilers

4.6.1 Piping arrangement

Within the crude oil machinery spaces and other machinery spaces, crude oil pipes are to be fitted within a metal duct, which is to be gastight and tightly connected to the fore bulkhead separating the pump room and to the tray. This duct (and the enclosed piping) is to be fitted at a distance from the ship's side of at least 20% of the vessel's beam amidships and be at an inclination rising towards the boiler so that the oil naturally returns towards the pump room in the case of leakage or failure in delivery pressure. It is to be fitted with inspection openings with gastight doors in way of connections of pipes within it, with an automatic closing drain-trap placed on the pump room side, set in such a way as to discharge leakage of crude oil into the pump room.

In order to detect leakages, level position indicators with relevant alarms are to be fitted on the drainage tank defined in [4.6.3]. Also a vent pipe is to be fitted at the highest part of the duct and is to be led to the open in a safe position. The outlet is to be fitted with a suitable flame proof wire gauze of corrosion resistant material which is to be easily removable for cleaning.

The duct is to be permanently connected to an approved inert gas system or steam supply in order to make possible:

- injection of inert gas or steam in the duct in case of fire or leakage
- purging of the duct before carrying out work on the piping in case of leakage.

4.6.2 Shut-off valves

In way of the bulkhead to which the duct defined in [4.6.1] is connected, delivery and return oil pipes are to be fitted on the pump room side, with shut-off valves remotely controlled from a position near the boiler fronts or from the machinery control room. The remote control valves should be interlocked with the hood exhaust fans (defined in [4.6.4]) to ensure that whenever crude oil is circulating the fans are running.

4.6.3 Trays and gutterways

Boilers are to be fitted with a tray or gutterway of a height to the satisfaction of the Society and placed in such a way as to collect any possible oil leakage from boilers, valves and connections.

Such a tray or gutterway is to be fitted with a suitable flame proof wire gauze, made of corrosion resistant material and easily dismountable for cleaning. Delivery and return oil pipes are to pass through the tray or gutterway by means of a tight penetration and are then to be connected to the oil supply manifolds.

The tray or gutterway is to be fitted with a draining pipe discharging into a collecting tank complying with the provisions of [4.5.5].

4.6.4 Hoods

Boilers are to be fitted with a suitable hood placed in such a way as to enclose as much as possible of the burners, valves and oil pipes, without preventing, on the other side, air inlet to burner register.

The hood, if necessary, is to be fitted with suitable doors placed in such a way as to enable inspection of and access to oil pipes and valves placed behind it. It is to be fitted with a duct leading to the open in a safe position, the outlet of which is to be fitted with a suitable flame wire gauze, easily dismountable for cleaning. At least two mechanically driven exhaust fans having spark proof impellers are to be fitted so that the pressure inside the hood is less than that in the boiler room. The exhaust fans are to be connected with automatic change over in case of stoppage or failure of the one in operation.

The exhaust fan prime movers are to be placed outside the duct and a gas-tight bulkhead penetration is to be arranged for the shaft.

4.6.5 Gas detection

A gas detection plant is to be fitted with intakes:

- in the duct defined in [4.6.1]
- in the hood duct (downstream of the exhaust fans in way of the boilers) referred to in [4.6.4]
- in all zones where ventilation may be reduced.

An optical warning device is to be installed near the boiler fronts and in the machinery control room. An acoustical alarm, audible in the machinery space and control room, is to be provided.

4.6.6 Boiler purging

Means are to be provided for the boiler to be automatically purged before firing.

4.6.7 Pilot burner

One pilot burner in addition to the normal burning control is required.

4.6.8 Fire safety

Independent of the fire extinguishing plant as required by Rules, an additional fire extinguishing plant is to be fitted in the boiler room in such a way that it is possible for an approved fire extinguishing medium to be directed on to the boiler fronts and on to the tray defined in [4.6.3]. The emission of extinguishing medium is to automatically stop the exhaust fan of the boiler hood (see [4.6.2]).

A warning notice must be fitted in an easily visible position near the boiler front. This notice must specify that when an explosive mixture is signalled by the gas detection plant defined in [4.6.5] the watchkeepers are to immediately shut off the remote controlled valves on the crude oil delivery and return pipes in the pump room, stop the relative pumps, inject inert gas into the duct defined in [4.6.1] and turn the boilers to normal running on fuel oil.

4.7 Additional requirements for engines

4.7.1 General

Engines and their crude oil supply system are to comply with the applicable provisions of [4.6] and with the following requirements.

4.7.2 Arrangement of the crude oil piping system fitted to the engine

Crude oil pipes fitted to the engine are to be placed within a duct or covers complying with the provisions of [4.6.1]. However, the duct or covers may not be gas-tight provided that:

- the space within the duct or covers is maintained at a pressure below the pressure in the engine room by means of a mechanical exhaust ventilation system having a capacity of at least 30 changes per hour
- at least 2 exhaust fans are provided with automatic change-over in case of pressure loss
- the fans are of the non-sparking type, and their driving motor are placed outside the duct
- the temperature within the duct or covers is well below the self-ignition temperature of the crude oil
- a pressure sensor is fitted inside the duct or covers to detect any vacuum loss
- a system is provided to detect the presence of crude oil vapour in the duct or covers
- a flame arrester is fitted on the duct venting outlet.

4.7.3 Arrangement for oil leakage collection and detection

Gutterways or suitable grooves are to be arranged in way of the engine crude oil piping for the collection of possible leakages. They are to discharge into a detection well fitted with a high level alarm.

The detection wells are to be fitted with a draining pipe discharging into a collecting tank complying with the provisions of [4.5.5].

4.7.4 Gas detection

Gas detectors are to be fitted:

- in the duct or covers referred to in [4.7.2]
- in all zones where ventilation may be reduced.

4.7.5 Safety arrangements

The crude oil supply is to be shut-off and the engine switched over to fuel oil in the following cases:

- vacuum loss (see [4.7.2])
- crude oil detection (see [4.7.3])
- vapour detection (see [4.7.4]).

4.7.6 Fire safety

The duct or covers are to be fitted with a suitable fire-fighting system.

Where the duct or covers are not gas-tight, the fire-fighting system is to be of the spray water system.

Section 20 Swivels and Risers

1 Swivels

1.1 Pressure swivels

1.1.1 The pressure parts of a pressure swivel are to be designed and manufactured according to the requirements of Pt C, Ch 1, Sec 3 of the Ship Rules or other recognised pressure vessel code.

1.1.2 A pressure swivel is to be isolated from the structural loads due to the anchoring systems.

1.1.3 Piping loads on swivel are to be minimised (e.g. by means of an expansion joint).

1.1.4 Materials of swivel and seals are to be compatible with transported products.

1.1.5 Bearings are to be protected against internal fluids and marine environment. Bearings are to be designed for the rated life of the swivel.

1.1.6 If necessary, pressure seals are to be protected against mechanical aggression.

1.1.7 The sealing system of flammable or toxic products is to constitute, at least, a double barrier against leakage to environment or, for multiple product swivels, between the different products.

Means are to be provided to allow the checking of the sealing system integrity with the swivel in operation. A leak detection and alarm system is to be provided.

1.1.8 Means are to be provided to collect and safely dispose of liquid leaks of flammable products.

1.2 Electrical swivels

1.2.1 Electrical swivels are to be designed and manufactured according to the applicable requirements of Part C, Chapter 2.

1.2.2 Where relevant, electrical swivels are to be suitable for the hazardous area in which they are located.

1.3 Test of pressure swivels

1.3.1 Static resistance tests

A pressure swivel is to be subjected to a pressure resistance static test, according to its design code.

1.3.2 Dynamic tests

Rotation and oscillation tests including rest periods are to be performed at design pressure with measurement of starting and running moments.

At least two complete rotations, or equivalent, in each direction are to be performed. The rotation speed is to be around 1°/s.

1.4 Tests of electrical swivels

1.4.1 Static tests

An electrical swivel is to be subjected to dielectric and insulation resistance tests in accordance with Pt C, Ch 2, Sec 10.

1.4.2 Dynamic tests

A continuity test is to be performed with the swivel in rotation.

2 Marine riser systems

2.1 General

2.1.1 Application

In principle, the limit of classification is the connector of the riser with the pipeline end manifold.

Other limits may be agreed upon and in this case are to be specified on the Certificate of Classification.

The provisions of the present Article [2] are only applicable to marine riser systems connecting production or storage units to sea-bottom equipment and export lines when the additional class notation **RIPRO** is requested.

2.1.2 Definitions

a) Riser system:

The riser system includes the riser itself, its supports and all integrated riser components.

b) Riser:

The riser is the rigid or flexible pipe between the connectors located on the unit and on the sea bottom.

c) Riser components:

The riser components are all the equipment associated with the riser such as clamps, connectors, joints, end fittings, bend stiffeners.

d) Riser supports:

The riser supports are the ancillary structures giving the riser its configuration and securing it to the unit and to the sea bed, such as buoyancy modules and sinkers, arch systems, anchor points, tethers, etc.

2.2 Riser system design

2.2.1 Risers are subject to actions of currents and waves along the line, and primarily, to imposed displacements of riser head attached to the unit. Design analyses are to be carried out in order to ascertain that the design configuration is appropriate and in order to verify that extreme tensions, curvatures, and cyclic actions are within the design limits of the specified product.

The load cases selected for analysis are to be verified as being the most unfavourable combinations of vessel offsets and current/wave loadings.

An analysis of interference is to be performed in order to verify that all the risers, umbilical and anchor lines remain at an acceptable distance from each other (and from the unit) during operation.

The fatigue life of the riser is to be assessed.

2.3 Riser and riser components

2.3.1 Each marine riser is to be designed, fabricated, tested and installed in accordance with the requirements of a recognised standard, submitted to the agreement of the Society, such as:

a) For rigid riser systems:
- ANSI B 31.4 “Liquid transportation systems for hydrocarbons, liquid petroleum gas, anhydrous ammonia and alcohols”
- ANSI B 31.8 “Gas transmission and distribution piping systems”
- BS 8010 “Code of practice for pipelines”
- API RP 2RD “Design of Risers for Floating Production Systems (FPSs) and Tension-Leg Platforms (TLPs)
- API RP 1111 “Design, Construction, Operation and Maintenance of Offshore Hydrocarbon Pipelines (Limit State Design).

b) For non-bonded flexible riser systems:
- Guidance Note NI 364, Non-Bonded Flexible Steel Pipes Used as Flow-Lines
- API Spec 17J “Specification for Unbonded Flexible Pipes”
- API RP 17B “Recommended Practice for Flexible Pipe”.

c) For bonded flexible riser systems:
- OCIMF “Guide to Purchasing, Manufacturing and Testing of Loading and Discharge Hoses for Offshore Moorings” within 100 m waterdepth
- API Spec 17K “Specification for bonded flexible pipe”.

2.4 Riser supports

2.4.1 Equipment for supporting of risers are to be designed in accordance with the relevant provisions of Part B, Chapter 3.

2.4.2 Steel cables and fibre ropes used as tethers and associated fittings are to be designed and constructed in accordance with the relevant provisions of NR493, Classification of Mooring Systems for Permanent Offshore Units.

Appendix 1 Reference Sheets for Special Structural Details

Symbols

H : Height, in m, of a tank, to be taken as the vertical distance from the bottom to the top of the tank

L : Length, in m, as defined in Ch 1, Sec 1, [3.2.6]

T : Maximum draught, in m, as defined in:

- Ch 1, Sec 1, [3.2.10] for site condition
- Ch 1, Sec 1, [3.2.11] for transit condition

T_B : Scantling draught, in m, in light ballast condition.

1 Contents

1.1 General

1.1.1 This Appendix includes the reference sheets for structural details located at the end of ordinary stiffeners, as referred to in Ch 1, Sec 10, [4.5.3].

Table 1 : LONGITUDINALLY FRAMED SIDE

AREA 1: Side between $0,7T_B$ and 1,15T from the baseline	Connection of side longitudinal ordinary stiffeners with stiffeners of transverse primary supporting members - No bracket	Sheet 1.1

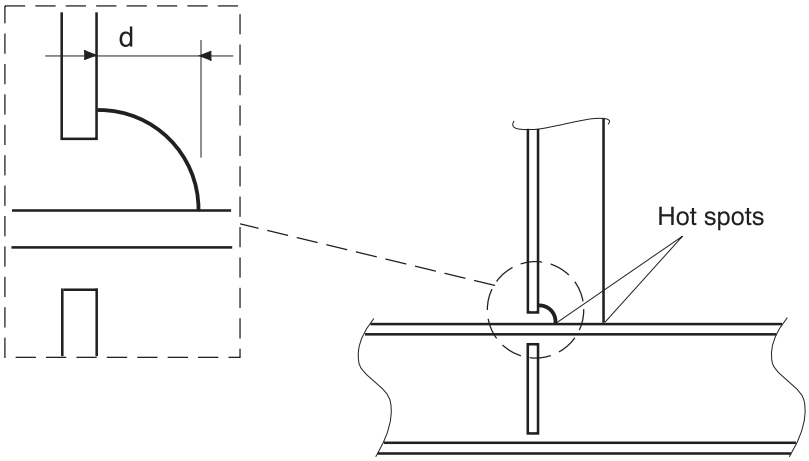

t = minimum thickness between those of:
- web of side longitudinal,
- stiffener of transverse primary supporting member.

SCANTLINGS:	FATIGUE:
d to be as small as possible, maximum 35 mm recommended.	Fatigue check to be carried out for L ≥ 170 m: • with non-watertight collar plate: K_h = 1,30 K_ℓ = 1,65 • with full collar plate (watertight): K_h = 1,25 K_ℓ = 1,50
CONSTRUCTION:	**NDE:**
• Misalignment between side longitudinal and web stiffener ≤ t / 3. • In case of fillet welding, misalignment may be as necessary to allow the required fillet throat size, but ≤ t / 2. For bulbs, a misalignment of 6 mm may be accepted.	Visual examination 100%.

WELDING AND MATERIALS:

Welding requirements:
- continuous fillet welding,
- weld around the stiffener's toes,
- fair shape of fillet at toes in longitudinal direction.

Table 2 : LONGITUDINALLY FRAMED SIDE

AREA 1: Side between $0,7T_B$ and 1,15T from the baseline	Connection of side longitudinal ordinary stiffeners with stiffeners of transverse primary supporting members - One bracket	Sheet 1.2

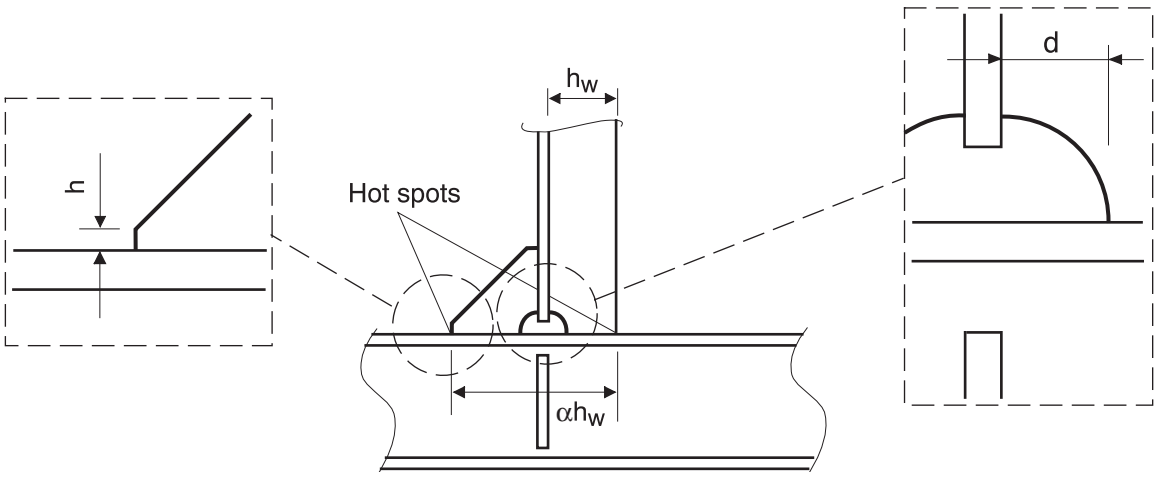

t = minimum thickness among those of the connected elements

SCANTLINGS:	FATIGUE:
• $\alpha \geq 2$. • Bracket to be symmetric. • h as necessary to allow the required fillet throat size, but ≤ 15 mm. • d to be as small as possible, maximum 35 mm recommended. • Thickness of the bracket to be not less than that of web stiffener.	Fatigue check to be carried out for L ≥ 170 m: • with non-watertight collar plate: - for $2 \leq \alpha < 2,5$ $K_h = 1,20$ $K_\ell = 1,40$ - for $\alpha \geq 2,5$ $K_h = 1,15$ $K_\ell = 1,40$ • with full collar plate (watertight): - for $2 \leq \alpha < 2,5$ $K_h = 1,15$ $K_\ell = 1,32$ - for $\alpha \geq 2,5$ $K_h = 1,10$ $K_\ell = 1,32$
CONSTRUCTION:	**NDE:**
• Misalignment between side longitudinal, web stiffener and bracket ≤ t / 3. • In case of fillet welding, misalignment may be as necessary to allow the required fillet throat size, but ≤ t / 2. For bulbs, a misalignment of 6 mm may be accepted.	Visual examination 100%.

WELDING AND MATERIALS:

Welding requirements:
- continuous fillet welding,
- weld around the stiffener's toes,
- fair shape of fillet at toes in longitudinal direction.

Table 3 : LONGITUDINALLY FRAMED SIDE

AREA 1: Side between 0,7TB and 1,15T from the baseline	Connection of side longitudinal ordinary stiffeners with stiffeners of transverse primary supporting members - One radiused bracket	Sheet 1.3

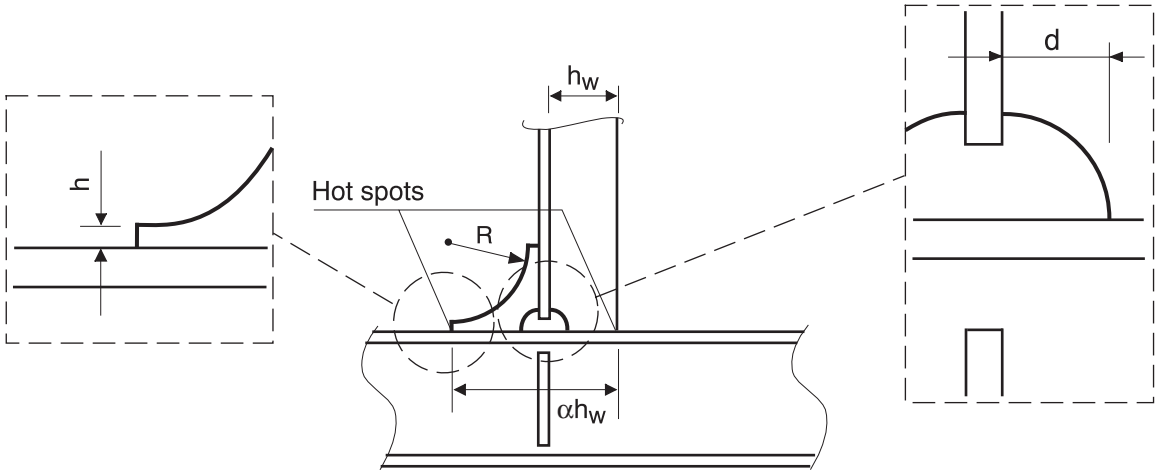

t = minimum thickness among those of the connected elements

SCANTLINGS:	FATIGUE:
• $\alpha \geq 2$. • Bracket to be symmetric. • $R \geq 1,5\ (\alpha - 1)\ h_W$ • h as necessary to allow the required fillet throat size, but ≤ 15 mm. • d to be as small as possible, maximum 35 mm recommended. • Thickness of the bracket to be not less than that of web stiffener.	Fatigue check to be carried out for L ≥ 170 m: • with non-watertight collar plate: - for $2 \leq \alpha < 2,5$ $K_h = 1,15$ $K_\ell = 1,35$ - for $\alpha \geq 2,5$ $K_h = 1,10$ $K_\ell = 1,35$ • with full collar plate (watertight): - for $2 \leq \alpha < 2,5$ $K_h = 1,13$ $K_\ell = 1,30$ - for $\alpha \geq 2,5$ $K_h = 1,08$ $K_\ell = 1,30$
CONSTRUCTION:	**NDE:**
• Misalignment between side longitudinal, web stiffener and bracket ≤ t / 3. • In case of fillet welding, misalignment may be as necessary to allow the required fillet throat size, but ≤ t / 2. For bulbs, a misalignment of 6 mm may be accepted.	Visual examination 100%.

WELDING AND MATERIALS:

Welding requirements:
- continuous fillet welding,
- weld around the stiffener's toes,
- fair shape of fillet at toes in longitudinal direction.

Table 4 : LONGITUDINALLY FRAMED SIDE

AREA 1: Side between $0,7T_B$ and 1,15T from the baseline	Connection of side longitudinal ordinary stiffeners with stiffeners of transverse primary supporting members - One bracket	Sheet 1.4

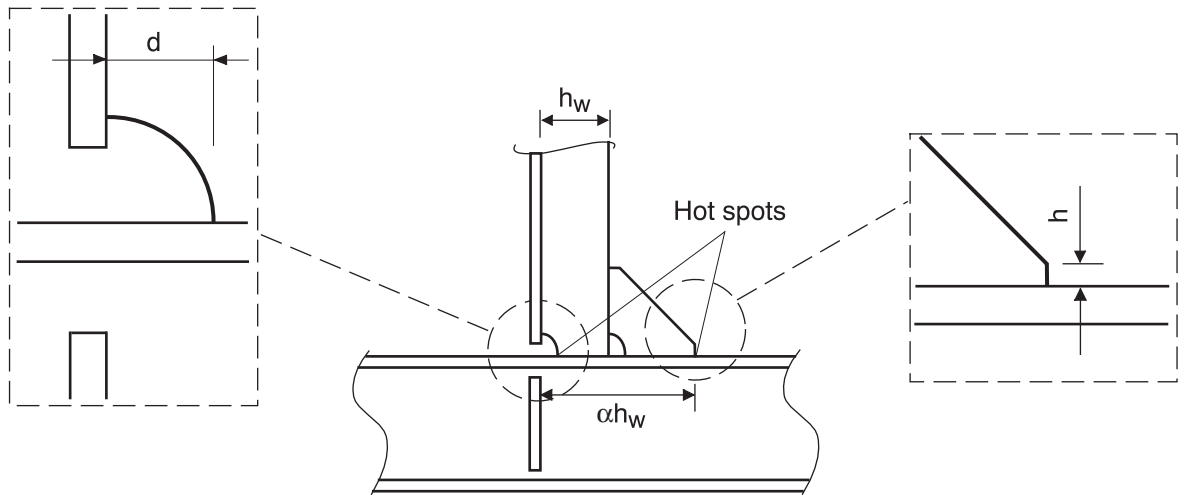

t = minimum thickness among those of the connected elements

SCANTLINGS:	FATIGUE:
• $\alpha \geq 2$. • Bracket to be symmetric. • h as necessary to allow the required fillet throat size, but ≤ 15 mm. • d to be as small as possible, maximum 35 mm recommended. • Thickness of the bracket to be not less than that of web stiffener.	Fatigue check to be carried out for L ≥ 170 m: • with non-watertight collar plate: - for $2 \leq \alpha < 2,5$ $K_h = 1,30$ $K_\ell = 1,55$ - for $\alpha \geq 2,5$ $K_h = 1,25$ $K_\ell = 1,50$ • with full collar plate (watertight): - for $2 \leq \alpha < 2,5$ $K_h = 1,25$ $K_\ell = 1,46$ - for $\alpha \geq 2,5$ $K_h = 1,20$ $K_\ell = 1,41$
CONSTRUCTION:	**NDE:**
• Misalignment between side longitudinal, web stiffener and bracket ≤ t / 3. • In case of fillet welding, misalignment may be as necessary to allow the required fillet throat size, but ≤ t / 2. For bulbs, a misalignment of 6 mm may be accepted.	Visual examination 100%.

WELDING AND MATERIALS:

Welding requirements:
- continuous fillet welding,
- weld around the stiffener's toes,
- fair shape of fillet at toes in longitudinal direction.

Table 5 : LONGITUDINALLY FRAMED SIDE

AREA 1: Side between $0,7T_B$ and 1,15T from the baseline	Connection of side longitudinal ordinary stiffeners with stiffeners of transverse primary supporting members - One radiused bracket	Sheet 1.5

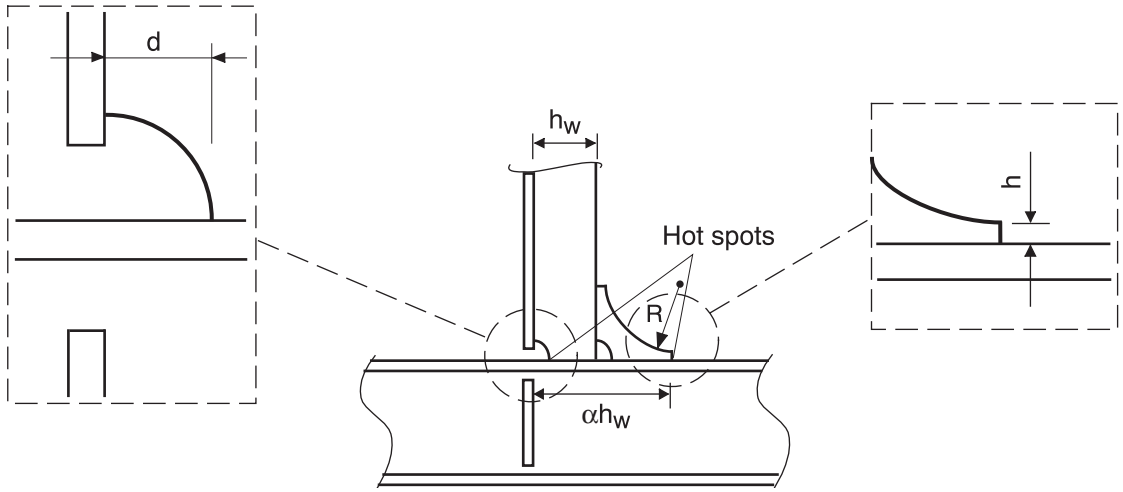

t = minimum thickness among those of the connected elements

SCANTLINGS:	FATIGUE:
• $\alpha \geq 2$. • Bracket to be symmetric. • $R \geq 1,5\ (\alpha - 1)\ h_W$ • h as necessary to allow the required fillet throat size, but ≤ 15 mm. • d to be as small as possible, maximum 35 mm recommended. • Thickness of the bracket to be not less than that of web stiffener.	Fatigue check to be carried out for L ≥ 170 m: • with non-watertight collar plate: - for $2 \leq \alpha < 2,5$ $K_h = 1,25$ $K_\ell = 1,50$ - for $\alpha \geq 2,5$ $K_h = 1,20$ $K_\ell = 1,45$ • with full collar plate (watertight): - for $2 \leq \alpha < 2,5$ $K_h = 1,22$ $K_\ell = 1,44$ - for $\alpha \geq 2,5$ $K_h = 1,18$ $K_\ell = 1,39$
CONSTRUCTION:	**NDE:**
• Misalignment between side longitudinal, web stiffener and bracket ≤ t / 3. • In case of fillet welding, misalignment may be as necessary to allow the required fillet throat size, but ≤ t / 2. For bulbs, a misalignment of 6 mm may be accepted.	Visual examination 100%.

WELDING AND MATERIALS:

Welding requirements:
- continuous fillet welding,
- weld around the stiffener's toes,
- fair shape of fillet at toes in longitudinal direction.

Table 6 : LONGITUDINALLY FRAMED SIDE

AREA 1: Side between $0,7T_B$ and 1,15T from the baseline	Connection of side longitudinal ordinary stiffeners with stiffeners of transverse primary supporting members - Two brackets	Sheet 1.6

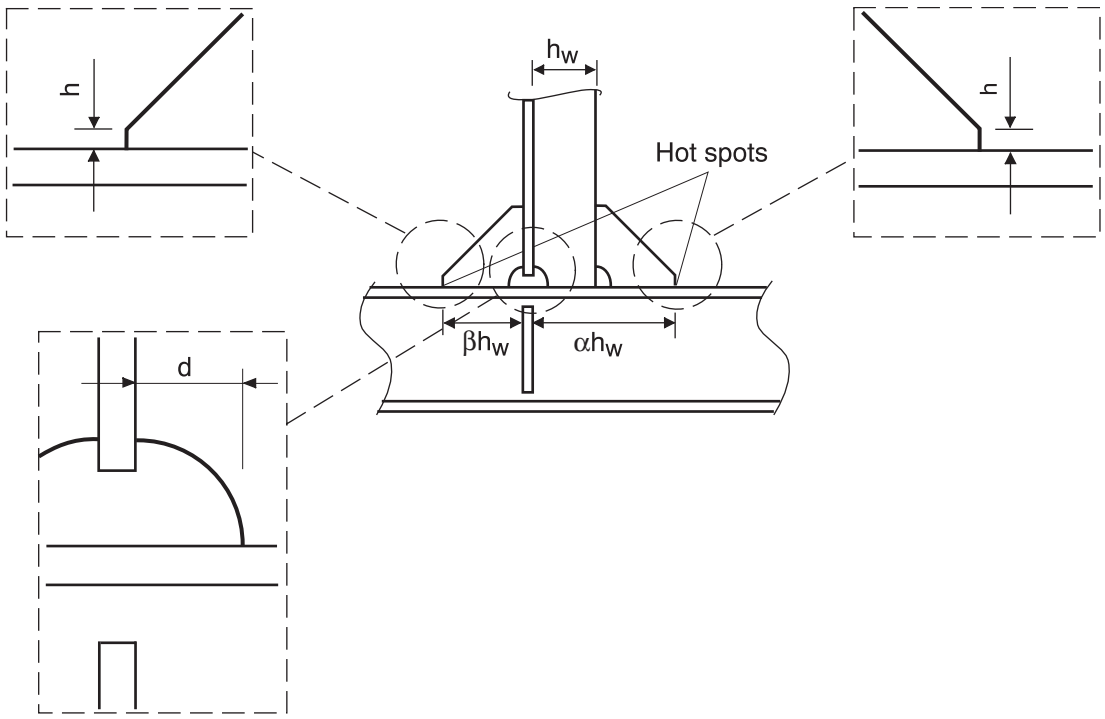

t = minimum thickness among those of the connected elements

SCANTLINGS:	FATIGUE:
• $\alpha \geq 2$. • $\beta \geq 1$. • Brackets to be symmetric. • h as necessary to allow the required fillet throat size, but ≤ 15 mm. • d to be as small as possible, maximum 35 mm recommended. • Thickness of the brackets to be not less than that of web stiffener.	Fatigue check to be carried out for L ≥ 170 m: • with non-watertight collar plate: - for $2 \leq \alpha < 2,5$ and $1 \leq \beta < 1,5$ $K_h = K_\ell = 1,15$ - for $\alpha \geq 2,5$ and $\beta \geq 1,5$ $K_h = K_\ell = 1,10$ • with full collar plate (watertight): - for $2 \leq \alpha < 2,5$ and $1 \leq \beta < 1,5$ $K_h = K_\ell = 1,10$ - for $\alpha \geq 2,5$ and $\beta \geq 1,5$ $K_h = K_\ell = 1,05$
CONSTRUCTION:	**NDE:**
• Misalignment between side longitudinal, web stiffener and brackets ≤ t / 3. • In case of fillet welding, misalignment may be as necessary to allow the required fillet throat size, but ≤ t / 2. For bulbs, a misalignment of 6 mm may be accepted.	Visual examination 100%.

WELDING AND MATERIALS:

- Welding requirements:
  - continuous fillet welding,
  - weld around the stiffener's toes,
  - fair shape of fillet at toes in longitudinal direction.
- Material requirements:
  - material of brackets to be the same of longitudinals.

Table 7 : LONGITUDINALLY FRAMED SIDE

AREA 1: Side between $0,7T_B$ and 1,15T from the baseline	Connection of side longitudinal ordinary stiffeners with stiffeners of transverse primary supporting members - Two radiused brackets	Sheet 1.7

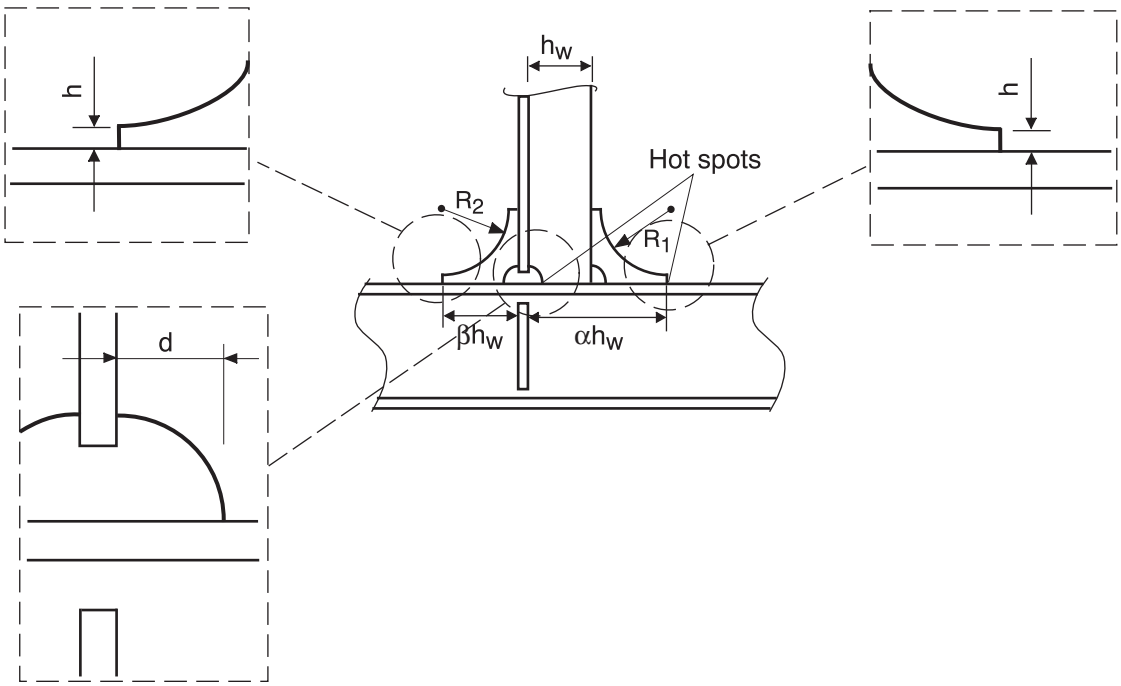

t = minimum thickness among those of the connected elements

SCANTLINGS:	FATIGUE:
• $\alpha \geq 2$. • $\beta \geq 1$. • Brackets to be symmetric. • $R_1 \geq 1,5\ (\alpha - 1)\ h_W$ • $R_2 \geq 1,5\ \beta\ h_W$ • h as necessary to allow the required fillet throat size, but ≤ 15 mm. • d to be as small as possible, maximum 35 mm recommended. • Thickness of the brackets to be not less than that of web stiffener.	Fatigue check to be carried out for L ≥ 170 m: • with non-watertight collar plate: - for $2 \leq \alpha < 2,5$ and $1 \leq \beta < 1,5$ $K_h = K_\ell = 1,10$ - for $\alpha \geq 2,5$ and $\beta \geq 1,5$ $K_h = K_\ell = 1,05$ • with full collar plate (watertight): - for $2 \leq \alpha < 2,5$ and $1 \leq \beta < 1,5$ $K_h = K_\ell = 1,10$ - for $\alpha \geq 2,5$ and $\beta \geq 1,5$ $K_h = K_\ell = 1,05$
CONSTRUCTION:	**NDE:**
• Misalignment between side longitudinal, web stiffener and brackets ≤ t /3. • In case of fillet welding, misalignment may be as necessary to allow the required fillet throat size, but ≤ t / 2. For bulbs, a misalignment of 6 mm may be accepted.	Visual examination 100%.

WELDING AND MATERIALS:

- Welding requirements:
  - continuous fillet welding,
  - weld around the stiffener's toes,
  - fair shape of fillet at toes in longitudinal direction.
- Material requirements:
  - material of brackets to be the same of longitudinals.

Table 8 : LONGITUDINALLY FRAMED INNER SIDE OR LONGITUDINAL BULKHEAD

AREA 2: Inner side and longitudinal bulkheads above 0,5H	Connection of inner side or bulkhead longitudinal ordinary stiffeners with stiffeners of transverse primary supporting members - No bracket	Sheet 2.1

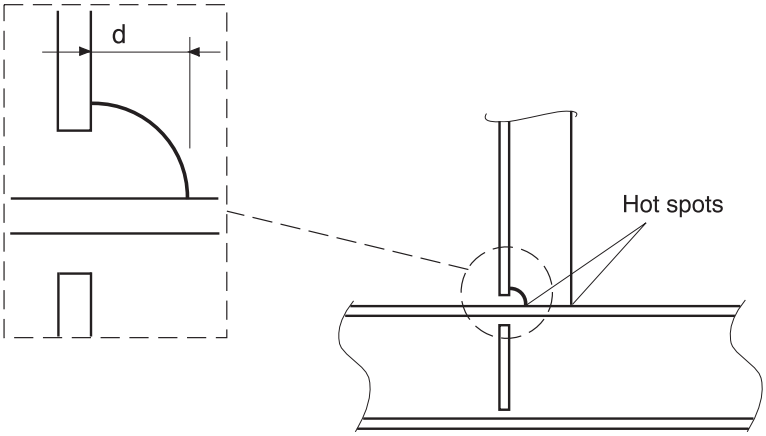

t = minimum thickness between those of:
- web of longitudinal,
- stiffener of transverse primary supporting member.

SCANTLINGS:	FATIGUE:
d to be as small as possible, maximum 35 mm recommended.	Fatigue check to be carried out for L ≥ 170 m: • with non-watertight collar plate: K_h = 1,30 K_ℓ = 1,65 • with full collar plate (watertight): K_h = 1,25 K_ℓ = 1,50
CONSTRUCTION:	**NDE:**
• Misalignment between longitudinal and web stiffener ≤ t / 3. • In case of fillet welding, misalignment may be as necessary to allow the required fillet throat size, but ≤ t / 2. For bulbs, a misalignment of 6 mm may be accepted.	Visual examination 100%.

WELDING AND MATERIALS:

Welding requirements:
- continuous fillet welding,
- weld around the stiffener's toes,
- fair shape of fillet at toes in longitudinal direction.

Table 9 : LONGITUDINALLY FRAMED INNER SIDE OR LONGITUDINAL BULKHEAD

AREA 2: Inner side and longitudinal bulkheads above 0,5H	Connection of inner side or bulkhead longitudinal ordinary stiffeners with stiffeners of transverse primary supporting members - One bracket	Sheet 2.2

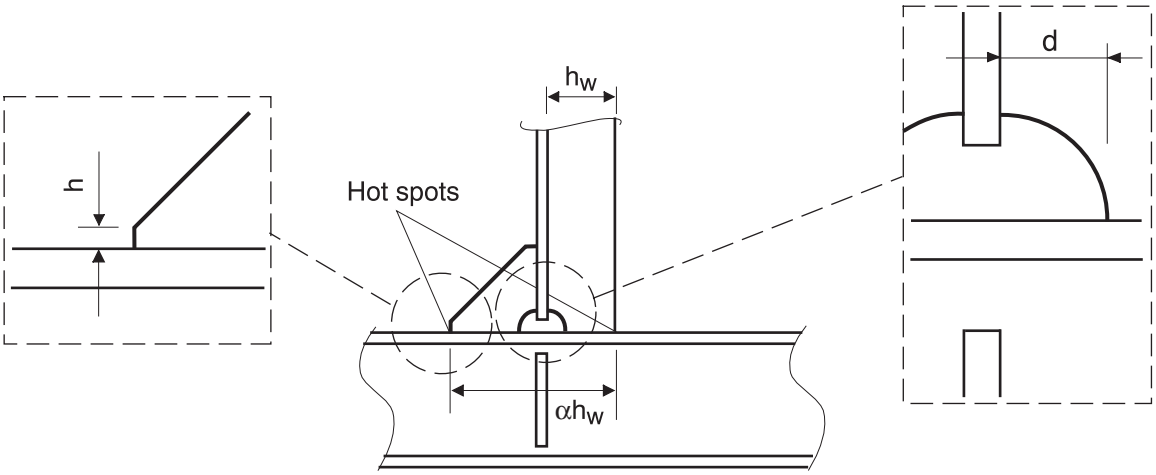

t = minimum thickness among those of the connected elements

SCANTLINGS:	FATIGUE:
• $\alpha \geq 2$. • Bracket to be symmetric. • h as necessary to allow the required fillet throat size, but ≤ 15 mm. • d to be as small as possible, maximum 35 mm recommended. • Thickness of the bracket to be not less than that of web stiffener.	Fatigue check to be carried out for L ≥ 170 m: • with non-watertight collar plate: - for $2 \leq \alpha < 2,5$ $K_h = 1,20$ $K_\ell = 1,40$ - for $\alpha \geq 2,5$ $K_h = 1,15$ $K_\ell = 1,40$ • with full collar plate (watertight): - for $2 \leq \alpha < 2,5$ $K_h = 1,15$ $K_\ell = 1,32$ - for $\alpha \geq 2,5$ $K_h = 1,10$ $K_\ell = 1,32$
CONSTRUCTION:	**NDE:**
• Misalignment between longitudinal, web stiffener and bracket ≤ t / 3. • In case of fillet welding, misalignment may be as necessary to allow the required fillet throat size, but ≤ t / 2. For bulbs, a misalignment of 6 mm may be accepted.	Visual examination 100%.

WELDING AND MATERIALS:

Welding requirements:
- continuous fillet welding,
- weld around the stiffener's toes,
- fair shape of fillet at toes in longitudinal direction.

Table 10 : LONGITUDINALLY FRAMED INNER SIDE OR LONGITUDINAL BULKHEAD

AREA 2: Inner side and longitudinal bulkheads above 0,5H	Connection of inner side or bulkhead longitudinal ordinary stiffeners with stiffeners of transverse primary supporting members - One radiused bracket	Sheet 2.3

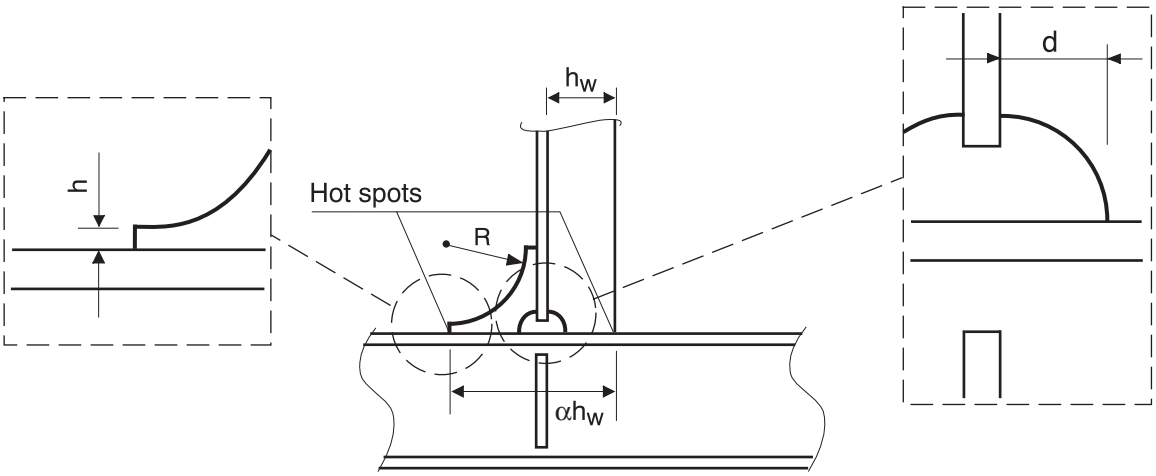

t = minimum thickness among those of the connected elements

SCANTLINGS:	FATIGUE:
• $\alpha \geq 2$. • Bracket to be symmetric. • $R \geq 1,5\ (\alpha - 1)\ h_W$ • h as necessary to allow the required fillet throat size, but ≤ 15 mm. • d to be as small as possible, maximum 35 mm recommended. • Thickness of the bracket to be not less than that of web stiffener.	Fatigue check to be carried out for L ≥ 170 m: • with non-watertight collar plate: - for $2 \leq \alpha < 2,5$ $K_h = 1,15$ $K_\ell = 1,35$ - for $\alpha \geq 2,5$ $K_h = 1,10$ $K_\ell = 1,35$ • with full collar plate (watertight): - for $2 \leq \alpha < 2,5$ $K_h = 1,13$ $K_\ell = 1,30$ - for $\alpha \geq 2,5$ $K_h = 1,08$ $K_\ell = 1,30$
CONSTRUCTION:	**NDE:**
• Misalignment between longitudinal, web stiffener and bracket ≤ t / 3. • In case of fillet welding, misalignment may be as necessary to allow the required fillet throat size, but ≤ t / 2. For bulbs, a misalignment of 6 mm may be accepted.	Visual examination 100%.

WELDING AND MATERIALS:

Welding requirements:
- continuous fillet welding,
- weld around the stiffener's toes,
- fair shape of fillet at toes in longitudinal direction.

Table 11 : LONGITUDINALLY FRAMED INNER SIDE OR LONGITUDINAL BULKHEAD

AREA 2: Inner side and longitudinal bulkheads above 0,5H	Connection of inner side or bulkhead longitudinal ordinary stiffeners with stiffeners of transverse primary supporting members - One bracket	Sheet 2.4

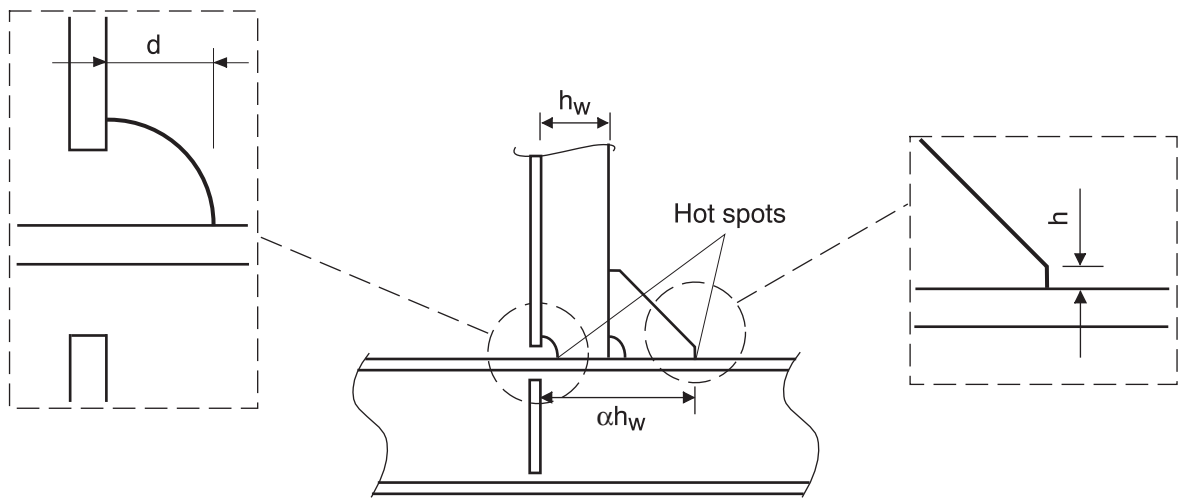

t = minimum thickness among those of the connected elements

SCANTLINGS:	FATIGUE:
• $\alpha \geq 2$. • Bracket to be symmetric. • h as necessary to allow the required fillet throat size, but ≤ 15 mm. • d to be as small as possible, maximum 35 mm recommended. • Thickness of the bracket to be not less than that of web stiffener.	Fatigue check to be carried out for L ≥ 170 m: • with non-watertight collar plate: - for $2 \leq \alpha < 2,5$ $K_h = 1,30$ $K_\ell = 1,55$ - for $\alpha \geq 2,5$ $K_h = 1,25$ $K_\ell = 1,50$ • with full collar plate (watertight): - for $2 \leq \alpha < 2,5$ $K_h = 1,25$ $K_\ell = 1,46$ - for $\alpha \geq 2,5$ $K_h = 1,20$ $K_\ell = 1,41$
CONSTRUCTION:	**NDE:**
• Misalignment between longitudinal, web stiffener and bracket ≤ t / 3. • In case of fillet welding, misalignment may be as necessary to allow the required fillet throat size, but ≤ t / 2. For bulbs, a misalignment of 6 mm may be accepted.	Visual examination 100%.

WELDING AND MATERIALS:

Welding requirements:
- continuous fillet welding,
- weld around the stiffener's toes,
- fair shape of fillet at toes in longitudinal direction.

Table 12 : LONGITUDINALLY FRAMED INNER SIDE OR LONGITUDINAL BULKHEAD

AREA 2: Inner side and longitudinal bulkheads above 0,5H	Connection of inner side or bulkhead longitudinal ordinary stiffeners with stiffeners of transverse primary supporting members - One radiused bracket	Sheet 2.5

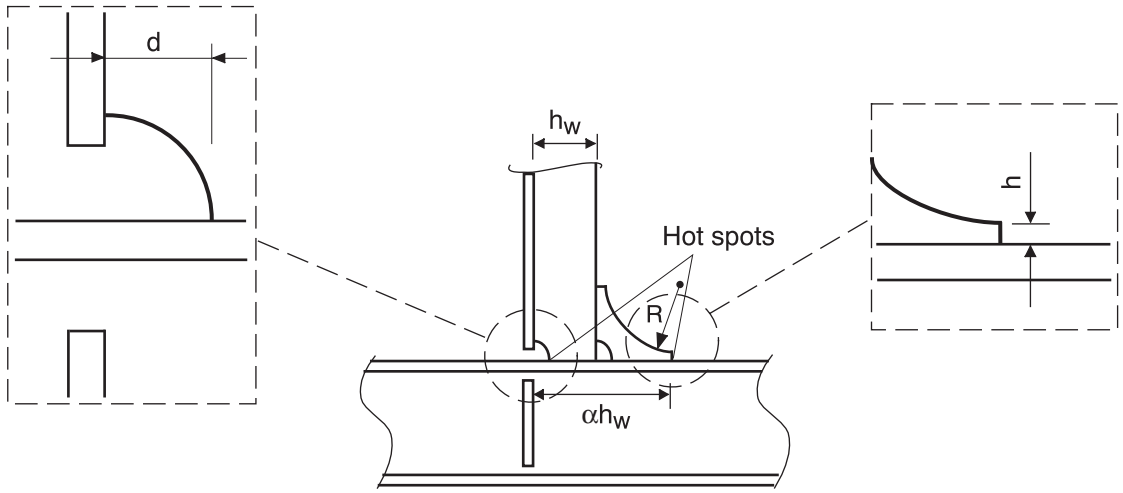

t = minimum thickness among those of the connected elements

SCANTLINGS:	FATIGUE:
• $\alpha \geq 2$. • Bracket to be symmetric. • $R \geq 1,5\ (\alpha - 1)\ h_W$ • h as necessary to allow the required fillet throat size, but ≤ 15 mm. • d to be as small as possible, maximum 35 mm recommended. • Thickness of the bracket to be not less than that of web stiffener.	Fatigue check to be carried out for L ≥ 170 m: • with non-watertight collar plate: - for $2 \leq \alpha < 2,5$ $K_h = 1,25$ $K_\ell = 1,50$ - for $\alpha \geq 2,5$ $K_h = 1,20$ $K_\ell = 1,45$ • with full collar plate (watertight): - for $2 \leq \alpha < 2,5$ $K_h = 1,22$ $K_\ell = 1,44$ - for $\alpha \geq 2,5$ $K_h = 1,18$ $K_\ell = 1,39$
CONSTRUCTION:	**NDE:**
• Misalignment between longitudinal, web stiffener and bracket ≤ t / 3. • In case of fillet welding, misalignment may be as necessary to allow the required fillet throat size, but ≤ t / 2. For bulbs, a misalignment of 6 mm may be accepted.	Visual examination 100%.

WELDING AND MATERIALS:

Welding requirements:
- continuous fillet welding,
- weld around the stiffener's toes,
- fair shape of fillet at toes in longitudinal direction.

Table 13 : LONGITUDINALLY FRAMED INNER SIDE OR LONGITUDINAL BULKHEAD

AREA 2: Inner side and longitudinal bulkheads above 0,5H	Connection of inner side or bulkhead longitudinal ordinary stiffeners with stiffeners of transverse primary supporting members - Two brackets	Sheet 2.6

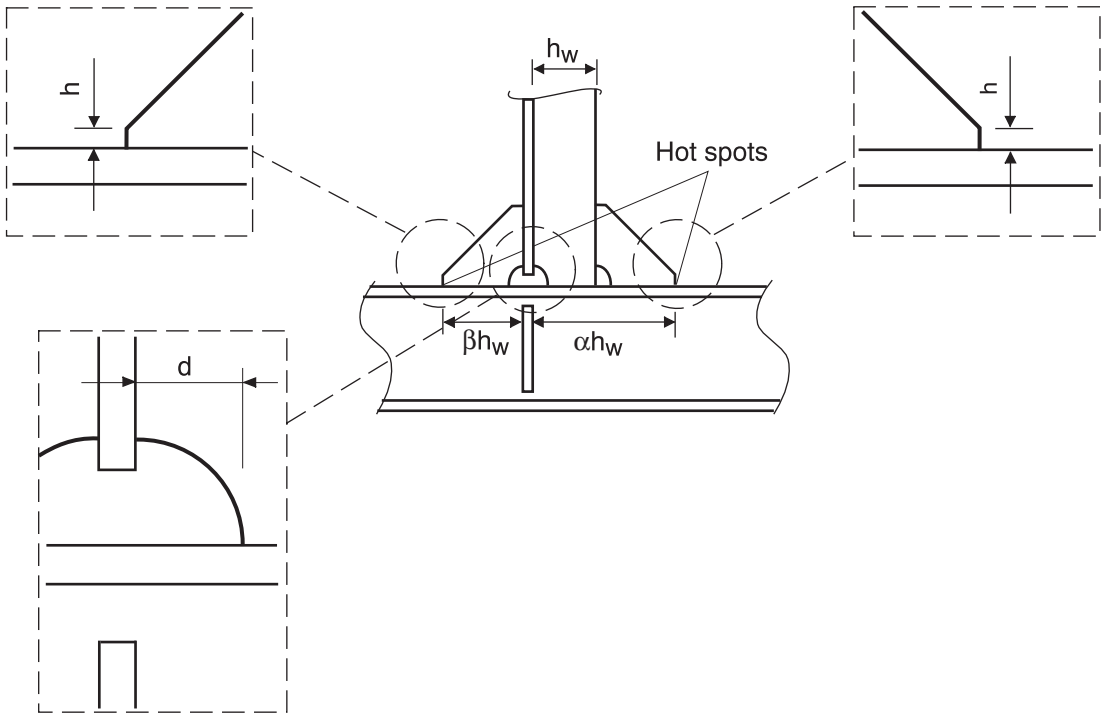

t = minimum thickness among those of the connected elements

SCANTLINGS:	FATIGUE:
• $\alpha \geq 2$. • $\beta \geq 1$. • Brackets to be symmetric. • h as necessary to allow the required fillet throat size, but ≤ 15 mm. • d to be as small as possible, maximum 35 mm recommended. • Thickness of the brackets to be not less than that of web stiffener.	Fatigue check to be carried out for L ≥ 170 m: • with non-watertight collar plate: - for $2 \leq \alpha < 2,5$ and $1 \leq \beta < 1,5$ $K_h = K_\ell = 1,15$ - for $\alpha \geq 2,5$ and $\beta \geq 1,5$ $K_h = K_\ell = 1,10$ • with full collar plate (watertight): - for $2 \leq \alpha < 2,5$ and $1 \leq \beta < 1,5$ $K_h = K_\ell = 1,10$ - for $\alpha \geq 2,5$ and $\beta \geq 1,5$ $K_h = K_\ell = 1,05$
CONSTRUCTION:	**NDE:**
• Misalignment between longitudinal, web stiffener and brackets ≤ t / 3. • In case of fillet welding, misalignment may be as necessary to allow the required fillet throat size, but ≤ t / 2. For bulbs, a misalignment of 6 mm may be accepted.	Visual examination 100%.

WELDING AND MATERIALS:

- Welding requirements:
  - continuous fillet welding,
  - weld around the stiffener's toes,
  - fair shape of fillet at toes in longitudinal direction.
- Material requirements:
  - material of brackets to be the same of longitudinals.

Table 14 : LONGITUDINALLY FRAMED INNER SIDE OR LONGITUDINAL BULKHEAD

AREA 2: Inner side and longitudinal bulkheads above 0,5H	Connection of inner side or bulkhead longitudinal ordinary stiffeners with stiffeners of transverse primary supporting members - Two radiused brackets	Sheet 2.7

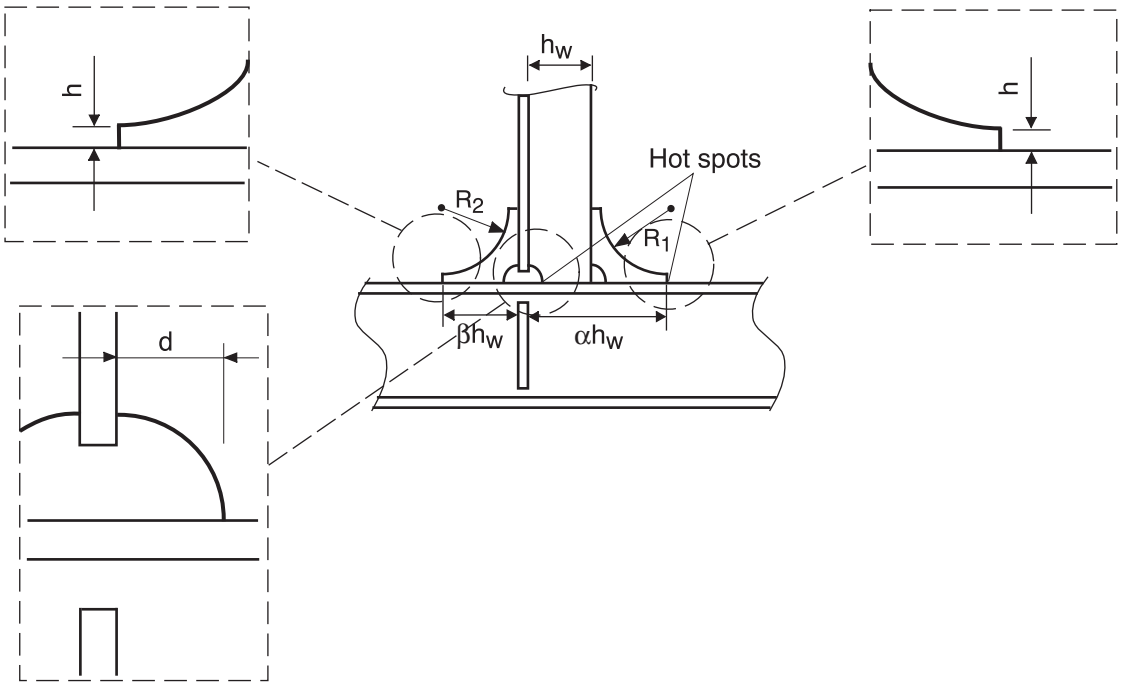

t = minimum thickness among those of the connected elements

SCANTLINGS:	FATIGUE:
• $\alpha \geq 2$. • $\beta \geq 1$. • Brackets to be symmetric. • $R_1 \geq 1,5\ (\alpha - 1)\ h_W$ • $R_2 \geq 1,5\ \beta\ h_W$ • h as necessary to allow the required fillet throat size, but ≤ 15 mm. • d to be as small as possible, maximum 35 mm recommended. • Thickness of the brackets to be not less than that of web stiffener.	Fatigue check to be carried out for L ≥ 170 m: • with non-watertight collar plate: - for $2 \leq \alpha < 2,5$ and $1 \leq \beta < 1,5$ $K_h = K_\ell = 1,10$ - for $\alpha \geq 2,5$ and $\beta \geq 1,5$ $K_h = K_\ell = 1,05$ • with full collar plate (watertight): - for $2 \leq \alpha < 2,5$ and $1 \leq \beta < 1,5$ $K_h = K_\ell = 1,10$ - for $\alpha \geq 2,5$ and $\beta \geq 1,5$ $K_h = K_\ell = 1,05$
CONSTRUCTION:	**NDE:**
• Misalignment between longitudinal, web stiffener and brackets ≤ t / 3. • In case of fillet welding, misalignment may be as necessary to allow the required fillet throat size, but ≤ t / 2. For bulbs, a misalignment of 6 mm may be accepted.	Visual examination 100%.

WELDING AND MATERIALS:

- Welding requirements:
  - continuous fillet welding,
  - weld around the stiffener's toes,
  - fair shape of fillet at toes in longitudinal direction.
- Material requirements:
  - material of brackets to be the same of longitudinals.

Table 15 : BOTTOM AND INNER BOTTOM LONGITUDINAL STIFFENERS

AREA 3: Double bottom in way of transverse bulkheads	Connection of bottom and inner bottom longitudinal ordinary stiffeners with floors - No bracket	Sheet 3.1

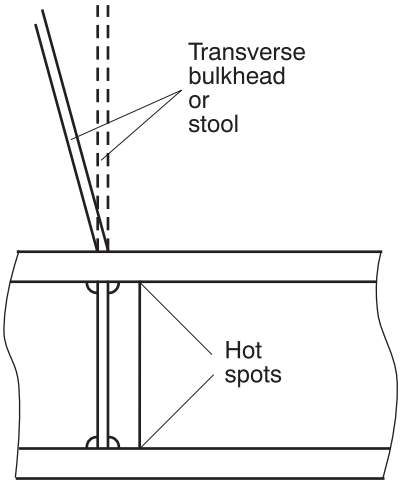

t = minimum thickness between those of:
- web of bottom or inner bottom longitudinal,
- floor stiffener.

SCANTLINGS:	FATIGUE:
	Fatigue check to be carried out for L ≥ 170 m: K_h = 1,30 K_ℓ = 1,65
CONSTRUCTION:	**NDE:**
• Misalignment between webs of bottom and inner bottom longitudinal with floor stiffener ≤ t / 3. • In case of fillet weld, misalignment may be as necessary to allow the required fillet leg size, but ≤ t / 2. For bulbs, a misalignment of 6 mm may be accepted.	Visual examination 100%.

WELDING AND MATERIALS:

Welding requirements:
- floor stiffeners to be connected with continuous fillet welding to bottom and inner bottom longitudinals,
- weld all around the stiffeners,
- fair shape of fillet at toes in longitudinal direction.

Table 16 : BOTTOM AND INNER BOTTOM LONGITUDINAL STIFFENERS

AREA 3: Double bottom in way of transverse bulkheads	Connection of bottom and inner bottom longitudinal ordinary stiffeners with floors - Brackets	Sheet 3.2

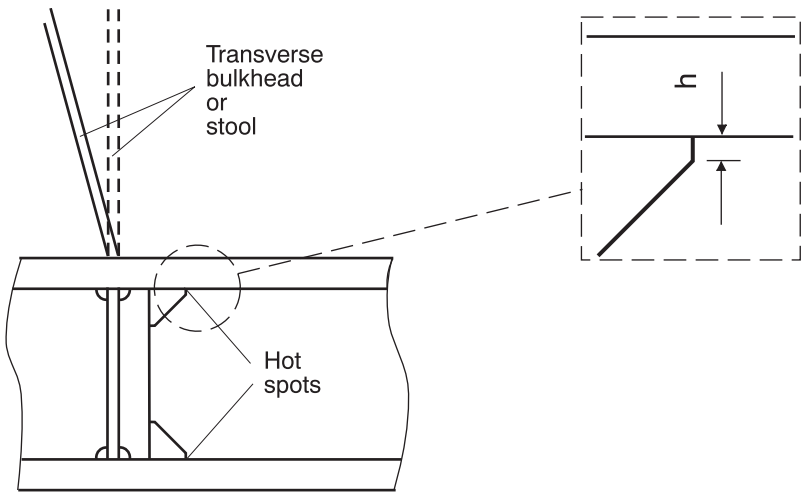

t = minimum thickness among those of the connected elements

SCANTLINGS:	FATIGUE:
h as necessary to allow the required fillet throat size, but ≤ 15 mm.	Fatigue check to be carried out for L ≥ 170 m: K_h = 1,30 K_ℓ = 1,55
CONSTRUCTION:	**NDE:**
• Misalignment between webs of bottom and inner bottom longitudinal with floor stiffener ≤ t / 3. • In case of fillet weld, misalignment may be as necessary to allow the required fillet leg size, but ≤ t / 2. For bulbs, a misalignment of 6 mm may be accepted.	Visual examination 100%.

WELDING AND MATERIALS:

Welding requirements:
- floor stiffeners and brackets to be connected with continuous fillet welding to bottom and inner bottom longitudinals,
- partial penetration welding between stiffeners and brackets,
- weld all around the stiffeners and brackets,
- fair shape of fillet at toes in longitudinal direction.

Table 17 : BOTTOM AND INNER BOTTOM LONGITUDINAL STIFFENERS

AREA 3: Double bottom in way of transverse bulkheads	Connection of bottom and inner bottom longitudinal ordinary stiffeners with floors - Radiused brackets	Sheet 3.3

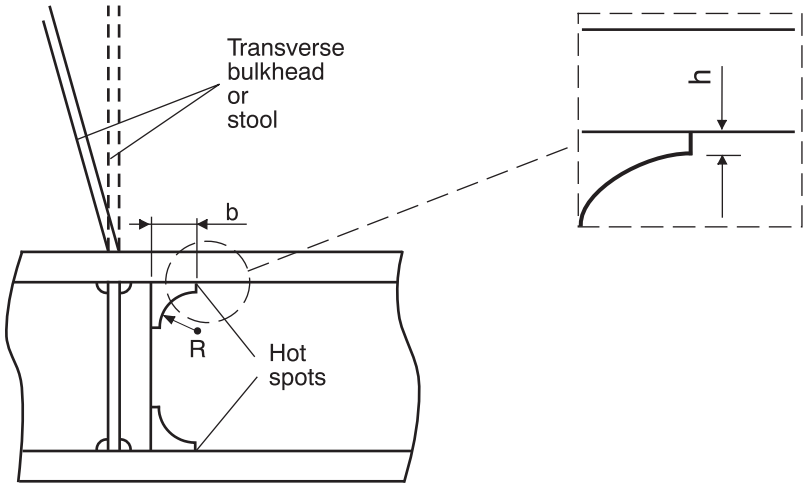

t = minimum thickness among those of the connected elements

SCANTLINGS:	FATIGUE:
• Brackets to be symmetric. • R ≥ 1,5 b • h as necessary to allow the required fillet throat size, but ≤ 15 mm.	Fatigue check to be carried out for L ≥ 170 m: K_h = 1,25 K_ℓ = 1,50
CONSTRUCTION:	**NDE:**
• Misalignment between webs of bottom and inner bottom longitudinal with floor stiffener ≤ t / 3. • In case of fillet weld, misalignment may be as necessary to allow the required fillet leg size, but ≤ t / 2. For bulbs, a misalignment of 6 mm may be accepted.	Visual examination 100%.

WELDING AND MATERIALS:

Welding requirements:
- floor stiffeners and brackets to be connected with continuous fillet welding to bottom and inner bottom longitudinals,
- partial penetration welding between stiffeners and brackets,
- weld all around the stiffeners and brackets,
- fair shape of fillet at toes in longitudinal direction.

BUREAU VERITAS MARINE & OFFSHORE

Tour Alto
4 place des Saisons
92400 Courbevoie - France
+33 (0)1 55 24 70 00

marine-offshore.bureauveritas.com/rules-guidelines

BUREAU VERITAS

Shaping a World of Trust